freshwaterwind

Freshwater Wind I

Shallow Water Offshore Wind Optimization for the Great Lakes (DE-FOA-0000415)

Final Report: A Conceptual Design for Wind Energy in the Great Lakes

February 2014

Freshwater Wind I, LLC
7935 Cliffview Drive
Youngstown, OH 44514-2759
Tel 412-254-8277
Fax 866 381 2761
www.freshwaterwind.com

Freshwater Wind I

Shallow Water Offshore Wind Optimization for the Great Lakes (DE-FOA-0000415)

Final Report: A Conceptual Design for Wind Energy in the Great Lakes

February 2014

Document no.	211080-02
Version	2.0
Date of issue	February 28, 2014
Prepared	STWH, JOMA, BRCO, LETO, DMSA, JOBA, BMRT
Checked	STWH
Approved	Chris Wissemann (Freshwater Wind I)
	Scott Ameduri (Freshwater Wind I)

Report Preparation

Recommended Citation: Stanley M. White, PE, Brent Cooper, PE, Leah DeLeon, EIT, February 28, 2014, "Shallow Water Offshore Wind Optimization for the Great Lakes (DE-FOA-0000415) - Final Report: A Conceptual Design for Wind Energy in the Great Lakes", prepared by OCC|COWI, prepared for Freshwater Wind I

~ ~ ~

Revision History

Revision	Date	Prepared By	Checked By	Approved By
1.0	12/27/2013	STWH, JOMA, BRCO, LETO, DMSA, JOBA, BMRT	STWH	C. Wissemann, S. Ameduri (Freshwater Wind I)
1.1	2/14/2014	LETO	BRCO	STWH
1.2	2/24/2014	STWH	BRCO	STWH
2.0	2/28/2014	STWH	C. Wissemann, S. Ameduri (Freshwater Wind I)	C. Wissemann, S. Ameduri (Freshwater Wind I)

Executive Summary

Freshwater Wind, LLC was selected to participate in the U.S. Department of Energy (U.S. DOE) project (FOAN DE-FOA-0000415, Topic Area 2) with the goal of reducing total wind plant levelized cost of energy (LCOE) by more than 25%. To achieve LCOE reduction targets, Freshwater has explored system-wide cost-saving design innovations to achieve this target.

The National Renewable Energy Laboratory (NREL) has taken the best available project information (from multiple projects and locations) and developed a preliminary "baseline" LCOE using a standard monopile foundation and NREL's 5MW representative turbine. This model was updated with site-specific data to make it suitable for the Great Lakes (including anticipated soil conditions and ice cone design) before the Baseline LCOE can be compared to the Gravity Base Foundation (GBF).

The Freshwater team has collected publically-available wind, wave, ice and geotechnical data. NREL has utilized anticipated wave and ice projections to develop an optimized rotor design, O&M plan, and plant layout. Freshwater, through the subrecipient, OCC|COWI, has developed the wave design criteria by hindcasting the wave climate at the site and has used public domain ice data to develop the design criteria for the site.

A number of innovative designs have been developed for the evaluation of the LCOE impacts during the remainder of the project. The innovative designs completed include:

- A Semi-Floating Gravity Based Foundation (GBF) with integrated buoyancy chambers that, when assisted by supplemental pontoons, can be floated to the installation site, eliminating the need for specialized heavy lift equipment.
- A GBF with a penetration skirt which will eliminate the need for bottom preparations including dredging and gravel bedding installation.
- A fabrication yard that will allow the GBF to be constructed in an assembly line method and launched by a commercially available "elevator" lift system which will eliminate the need for extensive yard improvements and expensive handling equipment.

- An innovative pontoon system that can provide supplemental buoyancy to a GBF, allowing a GBF to be floated from the harbor to the project site.
- A U-shaped barge fitted with winches, a tower support structure, and hydraulic collar such that the turbine tower may be integrated onto the GBF prior to deployment offshore.
- An optimized freshwater turbine, consisting of a rotor diameter and hub height intended to maximize energy capture in conditions specific to the site while minimizing BOS costs associated with the larger rotor.
- An improved O&M strategy, mobilizing ice breaking vessels in lieu of traditional workboats to perform corrective maintenance during unfavorable environmental conditions.
- An optimized turbine layout within the farm that balances inter-array cable lengths, wake losses, and Annual Energy Production (AEP).

The innovations are summarized in this report and more fully explored in a series of appended design memorandums.

Key Findings reached by Freshwater are the following:

- It is feasible and cost-effective to construct a specialty fabrication yard for this type of project. The capital investment for site improvements indicates that a facility should be considered for regional projects and the investment may be applied to many projects over the lifespan of the facility.
- GBFs can be launched and transported to the wind farm location without the need for heavy lift floating equipment.
- Based upon the anticipated site conditions and preliminary geotechnical investigation performed by LEEDCo, the GBF is a viable foundation type to support a 5 MW turbine in Lake Erie. The following designs are applicable:
    - Semi-floating GBF with air chambers and supplemental floation pontoons;
    - GBF with a penetration skirt; and
- An integrated GBF/turbine tower can be transported offshore and lowered into place using a custom U-shaped barge fitted with a tower support structure, hydraulic collar, and winches.
- The innovations developed by Freshwater in this project can be leveraged to decrease the estimated levelized cost of energy by 22.3%.

Table of Contents

Executive Summary		**2**
1	**Introduction**	**9**
1.1	Project Partners and Responsibilities	11
1.1.1	Freshwater Team Member Organizations	11
1.1.2	U.S. Department of Energy	12
1.2	Contributing Organizations	12
1.3	Project Objectives	12
1.4	Utility Scale Project Siting Location and Background	13
2	**Conceptual Design Phase**	**16**
2.1	Task 1.0 Develop Cost Model and Baseline Cost of Energy	16
2.1.1	Full Spectrum of Costs and Cost of Energy Baseline Model Update	17
2.2	Task 2.0 Document Site Conditions	18
2.2.1	Wind, Wave, and Ice Data	18
2.2.2	Geotechnical Characteristics - Desktop Study	19
2.3	Task 3.0 Conceptual Analysis Design Overview	22
2.4	Task 4.0 Conceptual Analysis Report	22
3	**Detailed Design Phase**	**23**
3.1	Task 5.0 Develop and Study Innovations	23
3.1.1	Subtask 5.1 BOS Engineering to Produce Component Dimension and Material Quantities	23
3.1.2	Subtask 5.2 Constructability Evaluation Tasks	29
3.1.3	Subtask 5.3 Turbine Innovations	46
3.1.4	Subtask 5.4 Wind Plant Layout	46
3.1.5	Subtask 5.5 O&M Strategies	47

4 Task 6.0 Optimized LCOE Model 49
4.1 LCOE Model Input Parameters 49
4.2 LCOE Model Results 50
4.3 Conclusions 51

5 Task 7.0 Project Management and Reporting 55
5.1 Project Management 55
5.1.1 Regular Meetings/Conference Calls with DOE Personnel 55
5.1.2 Regular Meetings/Conference Calls with Team Personnel 55
5.1.3 Project Schedules 56
5.1.4 Quarterly Reports 56
5.1.5 Financial Reporting 57
5.2 Reporting 57
5.2.1 Conceptual Analysis Report 57
5.2.2 Concept Design Report 57
5.3 Presentation at Offshore Wind Conference 57

6 Conclusions 58
6.1 Technical Feasibility Matrix 58

7 References 62

Appendix 1: Conceptual Design Memoranda 64
Regional Justification for Fabrication Facility 64
Fabrication Yard Summary 64
Semi Floating GBF Evaluation Report 64
Supplemental Flotation Summary 64
Barge Winch System Summary 64
GBF with Penetration Skirt Summary 64
GBF with Integrated Tower Summary 64

Appendix 2: Concept Sketches 65

Appendix 3: Opinion of Probable Cost 66
GBF Fabrication Yard OPC 66
GBF Transportation OPC 66
GBF Installation OPC 66

Semi-Floating GBF Fabrication OPC 66
Penetration Skirt GBF OPC 66
Barge-Winch OPC 66
Integrated Tower OPCs 66

Appendix 4: Geotechnical Reports 67
Geotechnical Desktop Study 67
Site-Specific Geotechnical Study 67

Appendix 5: National Renewable Energy Laboratory Reports 68
Baseline Levelized Cost of Energy 68
Optimized Rotor Design 68
Wind Farm Plant Layout 68
Operations and Maintenance 68
Updated Levelized Cost of Energy 68

List of Figures

Figure 1-1: Western boundary of ODNR Wind Turbine Placement Favorability Study area. 14
Figure 1-2: Hypothetical Freshwater Wind 500 MW Offshore Wind farm. Selected eastern site outlined in yellow. 15
Figure 2-1: Projects and Ports 18
Figure 2-2: LEEDCo subsurface soil profile and associated undrained shear strength. 21
Figure 3-1: Semi-Floating GBF 25
Figure 3-2: GBF With Penetration Skirt 28
Figure 3-3: Syncrolift® System (Photo Courtesy of Rolls Royce Naval Marine, Inc.) 31
Figure 3-4: Typical pontoon system configuration of beam “a” and length “b”. 33
Figure 3-5: GBF in tow position, limiting position for system stability (winches not shown). 34
Figure 3-6: Winch with a Multi-Fall Arrangement Pulley System 35
Figure 3-7: Plan view of tugs, GBF tower assembly, and notched barge during tow. 39
Figure 3-8: GBF lowered to lakebed. 39
Figure 3-9: Sample turbine and cable layout as computed by OpenWind. 47
Figure 4-1: Waterfall Chart of Innovations and Optimizations. 52

List of Tables

Table 2-1: Operating Parameters for Baseline Turbine Wind Farm 17
Table 2-2: Fabrication Yard Pile Recommendations 20
Table 3-1: Assumed Site Parameters 26
Table 3-2: Supplementary Floatation System Alternatives 33
Table 3-3: Basic barge dimensions required to achieve desired intact transverse stability (metric, US standard units). 38
Table 3-4: Estimated Cost Summary for GBF Fabrication and Installation 45
Table 3-5: Optimized Diameter and Hub Height. 46
Table 3-6: Effect of Optimized Turbine Innovations on LCOE. 46
Table 3-7: NREL O&M Scenarios and Energy Production. 48
Table 4-1: LCOE Model Operating Parameters 50
Table 4-2: LCOE Model Results 51

1 Introduction

Freshwater Wind I responded to a solicitation (FOAN DE-FOA-0000415) issued by the U.S. Department of Energy (U.S. DOE), Golden Field Office. A summary of the proposed project is as follows:

Topic Area 2 - Innovative Offshore Wind Plant System Design Studies

1) Reducing the Cost of Energy (COE) of offshore wind plants requires innovative turbine architectures developed in consort with advanced wind plant infrastructure. A holistic systems design approach addressing all aspects of hardware cost, performance, deployment, operability, and maintenance will be necessary to attain demonstrable step changes in offshore wind COE (See Appendix E for more detail). Individual turbine technology evolution must consider multiple elements including: total wind plant capital cost relative to rated capacity, installation and deployment processes, reduced Operations & Maintenance (O&M) through improved reliability and serviceability, increased energy capture, as well as the benefits achieved through economies of scale.

The analysis of both a determined baseline and proposed configuration will be based on a site in the Ohio waters of Lake Erie (20m (65ft) depth., which has characteristics that are representative of the nearly 180 GW of technically-feasible offshore wind potential in shallow areas of the Great Lakes, including good wind speeds (7 to 8.5m/s [15.7 to 19 mph]), low hydrodynamic loading (relative to Atlantic), ice loading, and no tropical storms [Musial 2010].

The Freshwater project has undertaken the following task-based approach:

1. **Task 1: Develop cost model and "baseline" LCOE**: Develop and document the full spectrum of costs reflecting today's best-available wind plant system designs suited for the site conditions, creating a model that will also be used to evaluate the proposed configuration.
2. **Task 2: Document site conditions**: Refine baseline LCOE assumptions

with the Lake Erie site-specific conditions relevant to system design, deployment, and operation methodologies, based on additional data made available through the LEEDCo Icebreaker demonstration project in Lake Erie.

3. **Task 3: Conceptual Analysis Design Overview**: Develop the conceptual Gravity Base Foundations (GBF) designs for the Freshwater innovations suited for the Great Lakes conditions. The Project's proposed innovations will focus on support structures, fabrication logistics, and installation methodologies—while simultaneously addressing expected enhancements to wind turbines, operations and maintenance (O&M), and the other wind plant system attributes such as vessels, ports, and electrical distribution.
4. **Task 5: Develop and Study Innovations**: Innovations developed and proposed under Task 3 will be further developed. The resulting set of concepts upon reanalysis will yield overall dimensions, order of magnitude material quantities, fabrication/construction methodology, and projections for the specific innovative cost items.
5. **Task 6: Evaluate LCOE impact of innovations**: Using the LCOE model, perform an assessment of how the proposed innovations directly improve specific LCOE items, and the overall effect on LCOE versus the baseline. The analysis will integrate appropriate detail on full offshore wind system cost components, with the unique benefit of incorporating characteristics of an actual project site.

Key innovations targeted for the Freshwater project included:

- Assembly Line "Rail System" Concept for Gravity Base Foundation (GBF) Construction and Staging
- Transit-Inspired Foundation Designs, Transit, and Installation Methods:
  - Semi-Floating Gravity Base Foundation
  - Gravity Base Foundation Transit with Supplemental Flotation
  - Innovative Gravity Base Foundation Installation
- Foundation "Penetration Skirt" for Lower-Cost Foundation Installation
- Integrated Turbine Base and Tower Assembly
- Turbine, Plant Layout, and Operations and Maintenance (O&M) Strategy Innovations:
  - Evaluate a set of potential, component-level innovations consistent with scaling wind turbines to 6-7 MW size for a mild wind resource climate. Consult with a turbine manufacturer for input on general innovative concept designs.
  - Utilize detailed wind resource and other site data to optimize energy capture while minimizing capital investment for electrical cabling.

- Customize O&M strategy to include effect of the project scale, increased reliability of turbine components, and considerations of icing effects.

The LEEDCo Demonstration Project (DOE-FOA-0000410) was awarded U.S. DOE funding in February 2013. The proposed LEEDCo project will include six (6) Siemens 3.0-113 direct drive turbines (18 MW) and is located approximately 12km (7.3mi) north of the City of Cleveland, OH in Lake Erie. Although not directly related, Freshwater and LEEDCo have agreed to cooperate as project partners by sharing data and findings to help advance the offshore wind industry in the Great Lakes. LEEDCo participated in the Freshwater project by providing a cost share contribution in the form of geotechnical investigation results.

1.1 Project Partners and Responsibilities

The Project Partners first envisioned in the response to the solicitation were modified prior to the issuance of the contract between U.S. DOE and Freshwater Wind I. The current Project Partners are all participating in the project with technical and financial (except NREL) contributions.

1.1.1 Freshwater Team Member Organizations

Freshwater Team Member Organizations	*Key Contributors*
Freshwater Wind, LLC *Overall Project Management And Administration*	Chris Wissemann Scott Ameduri Gene Ameduri, P.E.
Ocean and Coastal Consultants, Inc. a COWI Company *Lead Technical Partner and Project Administration*	Stanley M. White, P.E. Joseph F. Marrone, PE Brent D. Cooper, PE Ravi Sharma, Ph.D., PE Anders Augustesen Casper Leth John V. Bazzoni, Jr. Brian Rhett, EIT Leah DeLeon, EIT Danielle Somma, EIT
Lake Erie Energy Development Corporation (LEEDCo) *Geotechnical Program*	Lorry Wagner Dave Karpinski

URS Corporation *Geotechnical*	Tracey Engle Vikram Gautam Keith Mast
Weeks Marine, Inc. *Cost Estimating*	Richard Palmer Kevin Robinson
National Renewable Energy Laboratory (NREL) *Costing Models, Wind Resource Mapping and O&M Projections*	Rebecca Meadows Christopher Moné Ben Maples George Scott Tyler Stehly Rick Damiani

1.1.2 U.S. Department of Energy

HQ Program Manager	Jose Zayas
Field Contract Officer	Pamela Brodie
Field Grants Management Specialist	Jane Sanders
Field Project Officer	Michael Hahn
Program Specialist/CNJV Project Monitor	Yelena Onnen

1.2 Contributing Organizations

The following organizations and individuals also provided valuable information and feedback related to this effort:

Organizations	*Contributors*
American Block	Sumit Shah
Appleton Marine	Frank Pierri
Bridon	John Douglas
Huisman	Ed Adams Matt Middleton
Markey Machinery	
National Oilwell Varco	Alvin Niebur
Rolls Royce Naval Marine, Inc., represented by Hepburn and Sons, LLC	Rick Hepburn, PE Samantha Hepburn
Sheaves, Inc.	Stew Walton

1.3 Project Objectives

The “Shallow Water Offshore Wind Optimization for the Great Lakes” project is a study of a holistic offshore wind system that will be optimized for shallow water

conditions found in the Great Lakes. Innovations will be targeted to deliver at least 25% Cost of Energy (LCOE) reductions for large-scale offshore wind installations, relative to baseline LCOE reflecting shallow water installations today. The baseline will be developed with and agreed to by the U.S. DOE. Project work will have a special focus on Balance of System innovations, but will propose and assess an integrated wind plant system configuration designed to deliver holistic LCOE improvements. The analysis of the proposed configurations will be customized to the Ohio waters of Lake Erie, which has characteristics representative of the shallow areas of the Great Lakes, including good wind speeds, ice loading, low hydrodynamic loading, and no tropical storms.

The final Project deliverable will be a report summarizing the innovative concepts targeted to reach a goal of a 25% LCOE reductions versus baseline; an assessment quantifying those LCOE reductions; and the economic models used to produce the quantified LCOE assessment. Content will be presented at a leading U.S. offshore wind energy conference to advance the national knowledge base.

1.4 Utility Scale Project Siting Location and Background

In 2009, the Ohio Department of Natural Resources (ODNR) performed an analysis of the wind resources of the Ohio waters of Lake Erie. The analysis considered factors such as: wind speed, existing navigation and shipping channels, lake bottom conditions, bird habitat, fishery, and bathymetry. As a result of this analysis, ODNR published a series of "Wind Turbine Placement Favorability Analysis" maps, which graphically depicted the scoring of various grid squares (each grid square is 1' in latitude by 1' in longitude). The ODNR Wind Turbine Placement Favorability Analysis Map can be found at the ODNR web site.

http://dnr.state.oh.us/LinkClick.aspx?fileticket=4964Td0KAQQ%3d&tabid=23368

From this initial analysis, Freshwater determined a likely location for a utility scale project. Various considerations included: proximity to Cleveland, OH (and the Cleveland Water Intake Crib, for which over five (5) years of meteorological data exist); contiguous block of favorable grid squares, proximity to existing ports with sufficient construction space; and proximity to existing near shore electrical power plants to support transmission line interconnection. Sites west of, central to, and east of Cleveland, Ohio were identified based on this initial utility scale view. Areas with minimal limiting factors are shown as dark green in Figure 1-1 and Figure 1-2.

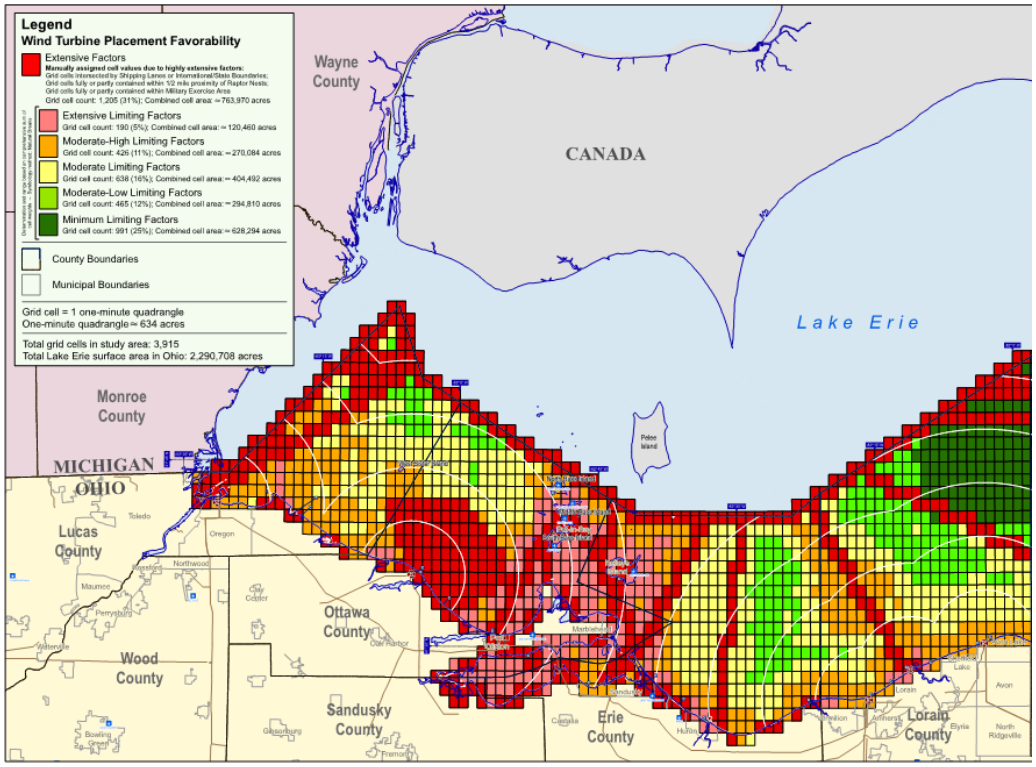

Figure 1-1: Western boundary of ODNR Wind Turbine Placement Favorability Study area.

For this project, the eastern layout was selected due to port and interconnect location availability. This eastern site is near the Port of Cleveland (fabrication), the Port of Ashtabula (O&M), and is near both the Perry Plant and the Ashtabula power plants (interconnection to grid). Figure 1-2 below indicates the three (3) considered sites.

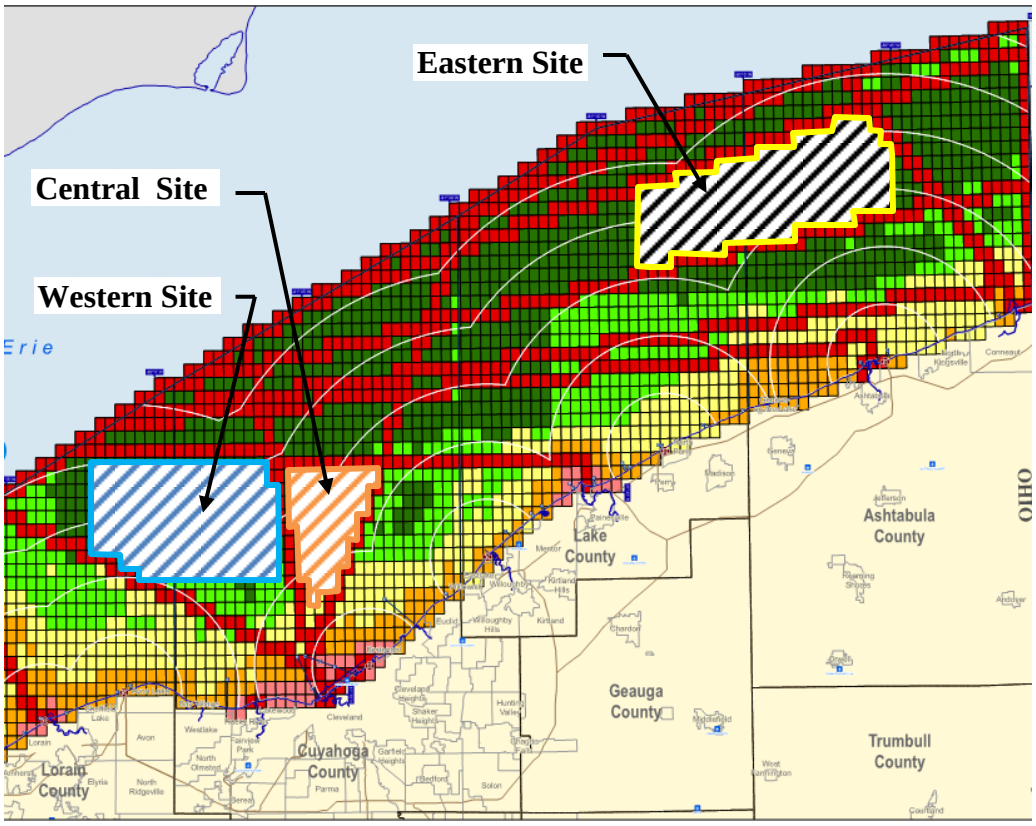

Figure 1-2: Hypothetical Freshwater Wind 500 MW Offshore Wind farm. Selected eastern site outlined in yellow.

2 Conceptual Design Phase

During the Conceptual Design Phase, the Freshwater Team developed an LCOE baseline by documenting and analyzing site conditions including wind, wave, ice, and geotechnical data. The development of innovations (further detailed in Section 3) were initiated during the concept design phase. Findings were summarized in the form of a Conceptual Analysis Report.

2.1 Task 1.0 Develop Cost Model and Baseline Cost of Energy

NREL used best-available wind plant system designs suited for Lake Erie site conditions to develop a cost model that would ultimately be used to evaluate the proposed configuration developed by the Freshwater Team. LCOE inputs were audited for consistency across tasks to ensure a holistic system design approach. The baseline LCOE model was developed assuming operating parameters summarized in Table 2-1.

Table 2-1: Operating Parameters for Baseline Turbine Wind Farm

Category	Baseline 500 MW Farm
Project Location	42° 4'54.54"N 80°52'45.54"W
Wind Plant Rating (MW)	500
# of Turbines	100
System Design Life (years)	20
Turbine Rating (kW)	5000
Rotor Diameter (m)	126
Hub Height (m)	90
Drivetrain Type	Geared
Foundation Type	Monopile
Distance to Interconnect (km) - Perry	21.6
Distance to O&M Port (km) - Ashtabula	21
Distance to Staging Port (Turbine) (km) - Cleveland	97
Distance to Staging Port (Foundation) (km) - Lorain	130
Water Depth (m)	22
Wind Speed at HH (m/s)	8.3
Weibull K	2.09
Wind Shear	0.11
Air Density (kg/m3)	1.225
Losses (%)	16.9
Availability (%)	91
Array Spacing	7d (E-W and N-S)

NREL's approach, assumptions, and full discussion of their baseline LCOE estimate can be found in Appendix 5: National Renewable Energy Laboratory Reports, Baseline Levelized Cost of Energy.

2.1.1 Full Spectrum of Costs and Cost of Energy Baseline Model Update

NREL initially constructed a baseline LCOE model based on operating parameters defined by Freshwater prior to contract award. During the execution of this project, Freshwater, OCC|COWI and NREL acquired additional, and sometimes more precise, data allowing the project team to more accurately model the Baseline LCOE. The updated baseline reflects a lower LCOE than originally reported at $0.188/kWh. The updated baseline LCOE is $0.1715/kWh.

The change is due to both increased windspeeds, and increased capital costs estimated. These updates to the baseline have been implemented throughout the

Freshwater project in order to consistently and accurately evaluate the impacts of the proposed innovations.

2.2 Task 2.0 Document Site Conditions

Preliminary site conditions documented by the Freshwater Team for the Conceptual Design Phase include wind, wave, ice, and geotechnical data.

2.2.1 Wind, Wave, and Ice Data

Although the hypothetical Freshwater and LEEDCo demonstration project sites are approximately 95km (58mi) apart, as seen in Figure 2-1, it is anticipated that the wave and ice climate at the two (2) sites will be similar. The LEEDCo site has the benefit of being located approximately 7km (4mi) from the Cleveland Crib which has been a source of wind, wave and ice data. The Freshwater project is a hypothetical project that required representative data, like the geotechnical program, and not necessarily site specific data.

Approximate Steaming Distances (Miles)		
Port	Icebreaker	Freshwater
Lorain	22	80
Cleveland	8	60
NEWGreen	36	24
Ashtabula	58	13

Figure 2-1: Projects and Ports

To estimate the impacts of wind, wave and ice on installation and maintenance costs, a time-series history of wind speed, wave height and ice coverage for the project area was generated by combining data from a wave hindcast model with ice

data from observations. The history covers the period from December 1988 through May of 2002 (including 14 winter seasons).

Hourly wind and wave data came from the US Army Corps of Engineers Wave Information Studies (WIS). The selected point was WIS92070, located at 41.56N, 81.76W, which is located between the Cleveland Crib and the LEEDCo project area. Daily ice coverage data (which may be interpolated between longer observation intervals) were obtained from NOAA's Great Lakes Ice Atlas using the National Ice Center records from the 1989 to 2002 winter seasons. Each daily ice observation was duplicated 24 times to match the hourly wind/wave data. A single ice coverage number was calculated from 7 Ice Atlas grid points: 4 points within the lease area and 3 more points leading southeast towards Cleveland. Ice coverage was computed as the maximum of these 7 points, since the proposed wind farm would not be accessible to a vessel if any of the points was covered with ice.

Numerical modeling of the atmospheric boundary layer is a powerful tool for simulating wind and other meteorological conditions relevant to wind energy project siting and development. With support from U.S. DOE and several states, it has been used to develop wind maps and associated databases for the entire country, including the Great Lakes region. However, the existing wind maps for Lake Erie have relied upon onshore data sources in the past due to data collection bouys being removed from Lake Erie during the winter months.

2.2.2 Geotechnical Characteristics - Desktop Study

Freshwater procured the services of URS Corporation to conduct a desktop study of existing geotechnical conditions for both the proposed fabrication yard and an offshore installation site. The only offshore site where data was available is at the approximate location of the Demonstration Project (LEEDCo). The fabrication yard site selected for this study would be in the Port of Cleveland, near the mouth of the Cuyohoga River. The results of URS data review and analysis are summarized herein, followed by recommendations and a summary of potential implications for construction. The complete URS memorandum can be found in Appendix 4: Geotechnical Reports.

2.2.2.1 Review of Existing Historical Information

URS conducted a review of the existing historic information (prior project reports and other documents in the Public Domain) to develop the generalized soil profile for the fabrication yard and Demonstration Project (LEEDCo) location. URS identified the presence of deep foundations associated with previous uses of the fabrication site. (See Figure 1 of Appendix 4: Geotechnical Reports for a graphical representation of possible obstructions associated with installation of a new anchored seawall at the fabrication site.)

2.2.2.2 Results of Subsurface Soil Profiles

URS generated preliminary subsurface profiles for the fabrication site based on historical soil borings from previous studies. It was determined that subsurface pro-

files for the fabrication site were consistent from north-south as well as east-west. A generalized soil profile was generated for each line as summarized in Figures 3-4 of Appendix 4: Geotechnical Reports.

The "Lake Bottom Geotechnical and Geophysical Studies - for First Phase Airport Feasibility Study" (Dames and Moore, 1974) was reviewed for obtaining geotechnical information related to the Demonstration Project (LEEDCo) offshore wind farm location (anticipated to be located approximately 7 miles offshore near the Port of Cleveland). As test borings were not available in the vicinity of the proposed wind farm location, two vibracore results and the bathymetry/isopach information from the airport feasibility study were utilized to develop a generalized subsurface profile. A generalized profile was approximated for the site and is summarized in Figure 5 of Appendix 4: Geotechnical Reports.

2.2.2.3 Fabrication Yard Foundation Recommendations

OCC|COWI developed the design of support beams and pile locations (with anticipated working loads) for the fabrication yard. URS generated preliminary foundation recommendations for pile working loads ranging from 68 to 159 tonnes (75 to 175 tons), taking into consideration the presumed subsurface soil conditions. Corresponding pile lengths and pile sections are presented in Table 2-2 Section 1.4 of Appendix 4: Geotechnical Reports.

Table 2-2: Fabrication Yard Pile Recommendations

LENGTH OF PILE REQUIRED (m, ft)			
Pile Section	**Working Load 68 tonnes (75 tons)**	**Working Load 136 tonnes (150 tons)**	**Working Load 159 tonnes (175 tons)**
HP 12 X 53	30.5 (100)	41.5 (136)	41.5 (136)
HP 14 X 73	27.4 (90)	40.9 (134)	41.5 (136)
12-inch pipe pile	35 (115)	41.5 (136)	41.5 (136)
16-inch pipe pile	27.5 (90)	41.5 (136)	41.5 (136)
18-inch pipe pile	24.4 (80)	40.9 (134)	41.5 (136)

2.2.2.4 Conclusions

If an offshore wind project were to proceed and if the installation contractor were to elect to fabricate the Gravity Base Foundations at the Port of Cleveland, additional geotechnical investigation is recommended for the fabrication yard. Contractors should be made aware of likely obstructions to pile driving from previous and current usage of the fabrication site. Possible obstructions may include but are not limited to remnants of previous structures, utilities, anchor walls, and deep foundations.

If an offshore wind project were to proceed and if the installation contractor were to elect to install the Gravity Base Foundations at any offshore site, a detailed soil investigation program will be required. Pressure grouting or other soil modification

techniques of the soft soils underneath the GBF base are potential recommendations to increase the bearing capacity of soft soils.

2.2.2.5 Site Specific Subsurface Investigation

LEEDCo, as part of the icebreaker project, procured the services of OCC|COWI to provide an analysis of subsurface investigation conducted by Conestoga-Rovers & Associates (CRA). A complete report including field results and analyses can be found in Appendix 4: Geotechnical Reports.

Borings and CPT soundings were used to generate a soil profile and estimate undrained shear strength of soil at given depths. Boring results demonstrate the presence of fine sediments, dense sand, silty clay, clay till, and limestone bedrock, from mudline to bedrock respectively (See Figure 2-2). A gas pocket was encountered within the bedrock. CPT readings indicated a cone tip resistance of approximately 195 tonnes/m^2 (20 tons/ft^2).

The site specific geotechnical parameters were used to update the semi-floating GBF design (see Section 3.1.1.1).

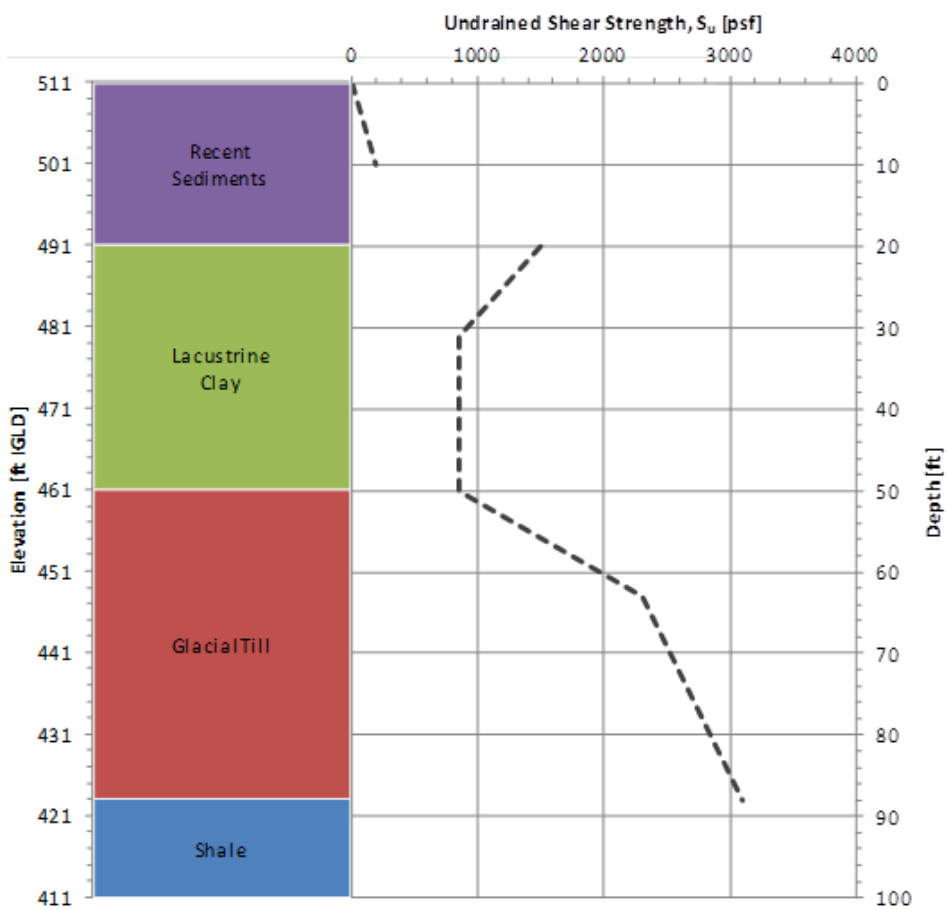

Figure 2-2: LEEDCo subsurface soil profile and associated undrained shear strength.

2.3 Task 3.0 Conceptual Analysis Design Overview

The conceptual analysis design phase of Freshwater considered available data in the form of geotechnical, geophysical, wind resource, and related site and port condition information. Ultimately, this data was utilized to develop applicable innovative design concepts leading to LCOE reductions. These conceptual designs were explored and presented in the form of a Conceptual Analysis Report. They are further explored in the Detailed Design Phase (see Section 3.1) of the project.

2.4 Task 4.0 Conceptual Analysis Report

A Conceptual Analysis Report was issued on May 30, 2013. The report documented innovative concepts explored by the Freshwater Team for Phase I of the project. The preliminary conceptual innovations described above were explored in greater detail, and are comprehensively defined in Task 5.0 Develop and Study Innovations of this report.

3 Detailed Design Phase

The Detailed Design Phase expands on the Conceptual Analysis Phase, further developing innovations, identifying areas where cost risks might cause uncertainty and providing a more comprehensive LCOE discussion.

3.1 Task 5.0 Develop and Study Innovations

Task 5.0 discusses continued engineering development of proposed innovations initiated during the Task 3.0 Concept Design Phase. Tasks included engineering development, and assessing the impact of integrated innovations across the wind plant system.

3.1.1 Subtask 5.1 BOS Engineering to Produce Component Dimension and Material Quantities

Freshwater investigated two innovative foundation concepts: a semi-floating GBF with integrated buoyancy chambers and a GBF with a penetration skirt. The two (2) concepts were selected based upon several factors including the ability to fabricate and install the structures with locally available materials, vessels, and equipment. Further, the GBF design is capable of being modified for the ice loading conditions found in the Great Lakes.

Associated with the design of the GBFs is the development of an efficient, innovative fabrication yard that will accommodate the fabrication of at least fifty (50) foundations per year. This will require an "assembly line" fabrication process and a method to launch the heavy concrete foundations.

Once the GBF is in the water, innovative methods to provide supplemental flotation to the GBF were considered. The flotation pontoons have to be mobile, able to "capture" the GBF and lower the GBF onto the lake bottom in a very controlled manner. This concept was further expanded by investigating the feasibility of installing the turbine tower on a semi-floating GBF at port, prior to being deployed offshore. This GBF with integrated tower concept requires a more substantial barge system in order to maintain minimum stability requirements during transport.

The conceptual designs developed by Freshwater meet the goals of the project and demonstrate feasible methods to fabricate and install GBFs in Lake Erie.

Ice Loads

Lake Erie is subject to the formation of freshwater lake ice and ridges during the winter months. Though the lake ice coverage is not observed every year, it occurs frequently enough to warrant ice load consideration in the design.

OCC|COWI used publically available ice data and industry accepted methods for determining ice thicknesses and strengths to determine ice loads on the GBFs. Ice cones were incorporated into the design in order to deflect the sheet (level) ice up or down in order to bend and eventually break it, rather than to crush the ice by pushing directly into the foundation. Since ice is weaker in bending than crushing, an ice cone reduces the sheet ice load on the foundation.

In accordance with DNV-OS-J101, the ice cones were designed in such a way that wave loads govern the ultimate limit state, rather than the ice loads.

Freshwater ridge ice also presents a design challenge. Ridge ice properties, return occurrence times, and loading characteristics are topics of ongoing research and sometimes conflicting data. OCC|COWI selected an empirical design method based on field measurements of ridge ice loads on a GBF bridge foundation (Brown and Seify, 2005) for this study.

Wave Loads

Hydrographic design parameters, including water depths, wave heights and currents associated with recurrence intervals were determined by a number of previously completed and publically available studies.

Wave forces are calculated according to DNV-OS-J101. Breaking waves were not considered in the design due to the fact that the maximum design wave height is less than the depth limited wave height.

3.1.1.1 Foundation Concepts

Two innovative foundation concepts were considered in during the Detailed Design Phase: Semi-floating GBF, and a GBF with penetration skirt.

Semi-floating Gravity Base Foundation

GBFs rely on the weight of the foundation to resist the applied turbine and environmental loads. GBFs have been successfully utilized for offshore wind projects in Europe. While use of other materials is possible, GBFs typically are constructed of reinforced and / or post-tensioned concrete. Typically the GBFs are also constructed with open chambers that can be filled with ballast (rock or sand) once the GBF is placed onsite.

In order to resist the applied loads, GBFs are naturally large and heavy. Given the construction equipment limitations on the Great Lakes and due to the lack of a US based supply chain, a modification to the standard GBF design is proposed for the Freshwater Wind Project. Semi-floating GBFs utilize buoyancy chambers integrated into the foundation in order to reduce the weight of the GBF during transport. Supplemental pontoons are attached to the semi-floating GBF to provide sufficient buoyancy to float the GBF and then the GBF/supplemental pontoons can then be towed to the installation site using traditional tugs. Section 3.1.2.2 describes the transportation and installation process in greater detail.

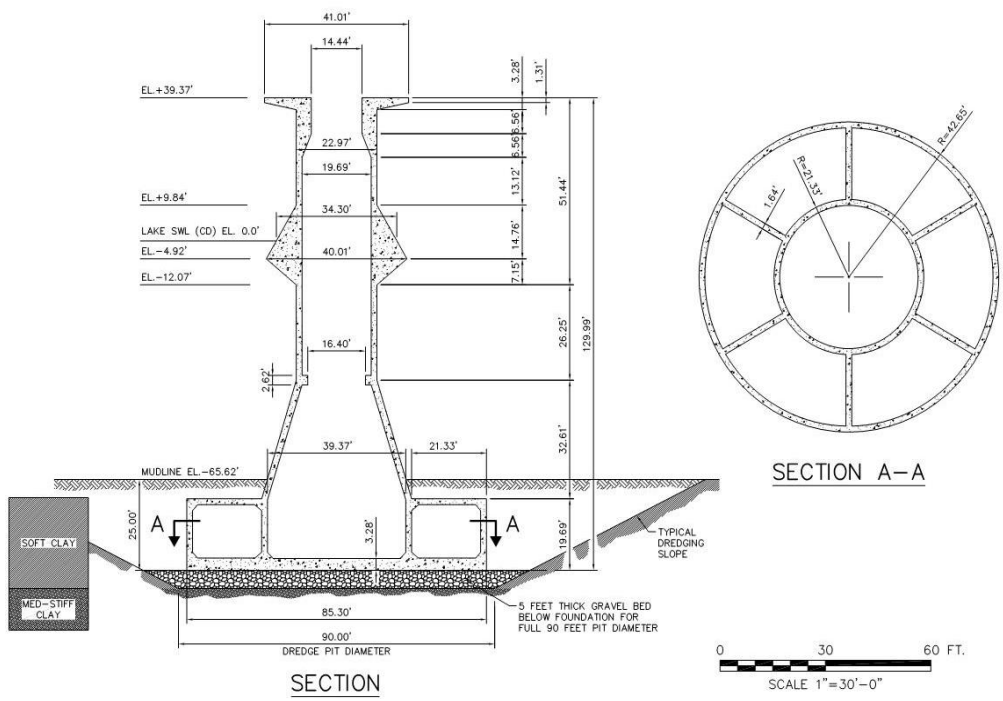

Figure 3-1: Semi-Floating GBF

A full summary of the semi-floating GBF design can be seen in the technical memorandum "Semi Floating GBF Evaluation Summary" by OCC|COWI, dated May 15, 2013, found in Appendix 1: Conceptual Design Memoranda. Select highlights of that memo are discussed below. The initial semi-floating GBF designed for Freshwater is seen in Figure 3-1. This design has been slightly modified (base diameter, buoyancy chamber height, foundation elevation) due to updated geotechnical information received from LEEDCo. The updated design is discussed in further detail below.

The primary Standard utilized for the GBF design is the DNV standard: DNV-OS-J101 (DNV). The design code uses the local Chart Datum (CD) for vertical elevations. Site parameters referenced below were assumed for each innovative foundation design approach.

Table 3-1: Assumed Site Parameters

ASSUMED SITE PARAMETERS (Metric, US Standard)			
Low Water Datum Lakebed Elevation	IGLD 1985	173.5 m	569.1 ft
50-Year Return Still Water Depth	SWD	2.4 m	7.9 ft
Water Depth	SWD	20 m	65 ft
50-Year Return Wave Height	9.2 sec Period	7.8 m	25.6 ft

The force due to level ice is estimated by following the procedure outlined in DNV for conical structures. Ice strength and thickness were estimated based on studies conducted in Lake Erie. Ridge ice forces were determined in accordance with Brown and Seify, 2005.

Based on site conditions, the interface elevation is assumed to be +12.0m (+39ft) above CD to avoid wave slamming forces on the service platform. The interface elevation is determined based on design still water level plus wave crest height plus a conservative free board allowance.

The NREL 5.0 MW turbine was selected as the design turbine. The hub height was set at 90m (295ft) for design horizontal loads, as well as overturning and torsion moments. Interface loads published by NREL were updated for the interface elevation specific to the Freshwater project.

The semi-floating GBF size and weight is assumed to be governed by the Ultimate Limit State (ULS). Accordingly, the detailed concept design phase considers only the Ultimate Limit State for geotechnical and structural design. Fatigue Limit State (FLS) and Serviceability Limit State (SLS) considerations are equally important for detailed design, and recommended as areas of future study. Transport and installation loads were not considered in this concept design.

The semi-floating GBF was evaluated for sliding, overturning and bearing capacity stability. Once the outer dimensions and structure weight was determined, OCC|COWI developed a structural three dimensional finite element model using Bentley's STAAD.Pro V8i software. Post analysis of the model showed that the highest stress concentrations were produced from the combined factored turbine, wave and current loads. Based on preliminary analysis, this gravity based foundation design can withstand the identified critical loads as long as meridional and circumferential post-tensioning is applied; the stresses determined by the model suggest that traditional cast-in-place and post-tensioned reinforcement ratios will be approximately the same order of magnitude as other GBF deployed in Europe.

It should be noted that this concept will require the removal of the soft surface sediments in order to have the GBF supported on the medium-stiff clay layer. The GBF will also be supported on a gravel bedding layer to ensure a level base.

Updated Semi-Floating GBF Design

Upon receipt of the Preliminary Subsurface Exploration Program Report, received from project partner, LEEDCo, OCC|COWI updated the semi-floating GBF design for the geotechnical characteristics observed at the LEEDCo site. Met-ocean and applied (i.e. turbine) loads remained consistent with the initial design. Full details of the updated design can be found in the Semi-Floating GBF Technial Summary memo found in Appendix 1. Select highlights are as follows.

It was determined that the optimized semi-floating GBF for the updated design consisted of a GBF founded 3m (10ft) higher [and thus overall reduced structure height of 3m (10ft.)], on recent deposits of dense sand. The overall diameter of the buoyancy chamber was increased to 29m (95ft), the buoyancy chamber height was reduced to 5.5m (18ft) and the ice cone was modified from a solid concrete fill, to a sand ballast filled concrete shell, based upon recent OCC|COWI best practices.

Due to more technically advanced modeling techniques and the updated geotechnical characteristics, savings in work items such as reduced concrete volume, effectively equivalent ballast volume and a nearly 70% savings in lake bed preparation, the updated GBF is anticipated to save approximately $430,000 per foundation during fabrication and $1,304,000 during installation.

Though the updated GBF shows a fabrication and installation savings of approximately $1,734,000 per foundation, this savings is not reflected in overall LCOE calculations. This savings is due primarily to the incorporation of better information, rather than an "innovation" as defined by U.S. DOE. It is further recommended to use the prior LCOE values because it is unknown if the updated soil characteristics are found throughout Lake Erie. The values presented above demonstrate that further LCOE savings could be realized.

Gravity Base Foundation with Penetration Skirt

Similar to the semi-floating GBF described above, the GBF with penetration skirt also relies on the weight of the foundation to resist the applied turbine and environmental loads. Unlike the semi-floating GBF in which the foundation's mass is contained within the structure, much of GBF with penetration skirt's weight is contained within the open bottomed cylindrical walls of penetration skirt.

As seen in Figure 3-2, the GBF with penetration skirt concept resembles the semi-floating concept. The primary differences are that the baseplate of the buoyancy chambers has been removed to allow the GBF to settle into the existing sediments and the top plate thickness has been increased to handle additional stresses at that level. The GBF with penetration skirt requires ballast only in the central core of the GBF, a significant reduction from the ballast required to fill the buoyancy chambers.

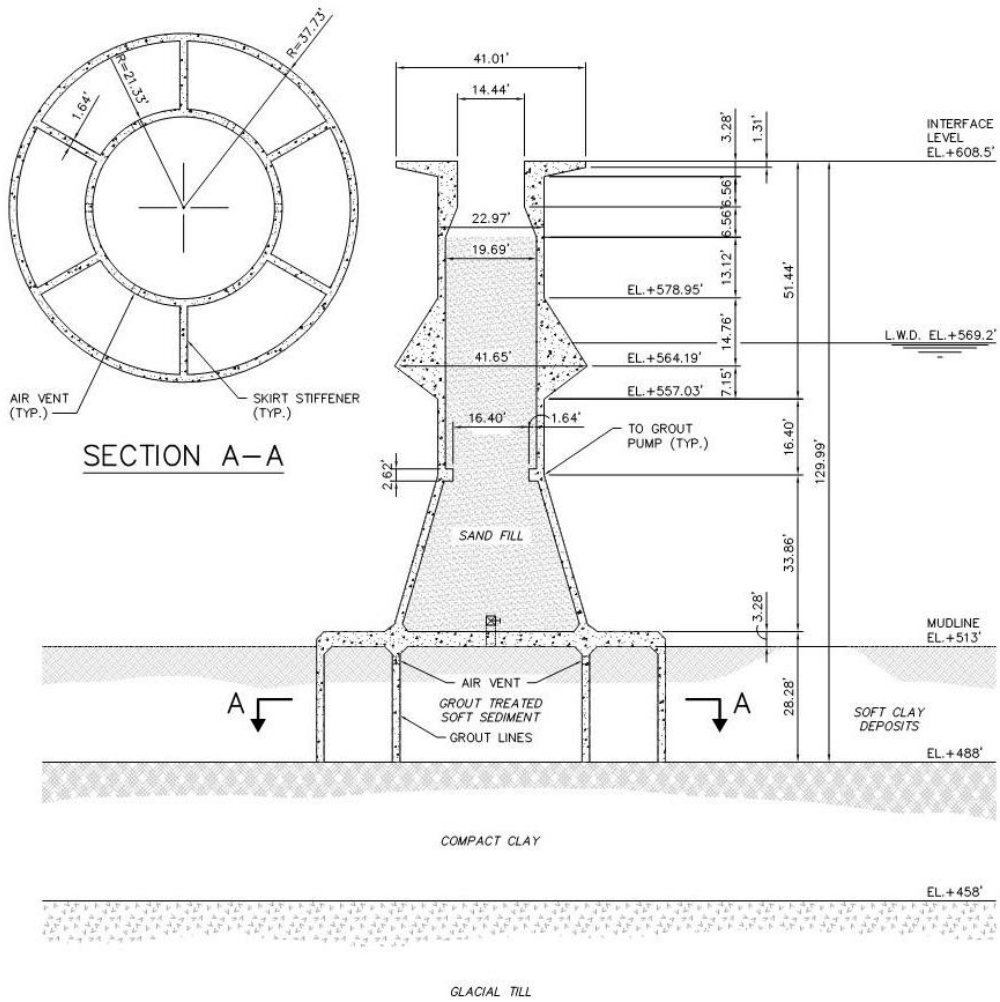

Figure 3-2: GBF With Penetration Skirt

In order to compare the two GBF concepts equally, similar site specific design constraints, including equal environmental conditions and loading, geotechnical conditions and turbine loading. A similar structural model was completed for the GBF with penetration skirt. However, due to the complex interaction, OCC|COWI also prepared a Plaxis geotechnical finite element model to better understand the interaction between the foundation skirts and adjacent soils. The purpose of the finite element analysis was to evaluate the behavior the skirt foundation system and to identify the critical failure mode within the soil. The results of the analyses indicate bearing capacity of the skirt foundation can be estimated by conventional theory due to the formation of a soil plug and that the inner skirts do not significantly increase bearing capacity.

The GBF with penetration skirt design was completed with the intent of using construction equipment similar to the semi-floating design. The GBFs with penetration skirt is able to trap air within the skirt, developing buoyancy and decreasing its effective weight once placed in the water and during transport. Pontoons are at-

tached to the GBF with penetration skirt to provide additional buoyancy sufficient to float the GBF, allowing it to be towed to site.

Unlike the semi-floating GBF which requires potentially significant lakebed preparation through dredging and placement of a gravel mat, the GBF with penetration skirt is intended to require relatively minimal advance preparation. After the GBF is towed to position, the GBF with penetration skirt is lowered to the lakebed. The walls of the foundation skirt penetrate into the seafloor, effectively containing the sediment within the skirt adding to the mass of the foundation. If necessary, suction pressure may be applied to assist the penetration into the lakebed. Once at the proper design depth, cementitous grout will be pumped at high pressure through grout tubes integrated into the foundation to improve the quality of soils near the skirt. The central column of the GBF is ballasted with sand. Sand may be placed hydraulically or mechanically. Once ballasting and grouted soil improvement operations are complete, the GBF is ready for turbine erection.

3.1.2 Subtask 5.2 Constructability Evaluation Tasks

In order to support the GBF concepts developed for the freshwater project, a number of innovative fabrication, staging, transit and installation concepts have been developed. These innovative concepts are meant to complement the foundation designs considering the existing infrastructure, labor, and equipment available in the Great Lakes.

3.1.2.1 Fabrication Yard

A significant reduction in the cost of foundations may be realized by transitioning from a "fabrication" process to more of a "manufacturing" process, in order to take advantage of economies of scale. An innovation of the Freshwater project is to mass produce the concrete GBF in an assembly line process. OCC|COWI developed the conceptual design of a fabrication facility intended to enable rapid and economical production of a large number of GBFs. In this concept, progressing levels of fabrication are completed as the GBF moves between positions on each assembly line. The GBF is moved from position to position by hydraulic jacks that "skid" the GBF along large concrete beams. Due to a low friction surface, the concrete beams act as rails, enabling the heavy weight structures to be moved without the need for extreme cranes or other complicated and expensive logistical strategies.

This proposed fabrication yard layout was developed for a site at the Port of Cleveland. However, this design may be modified for other facilities with similar site parameters, particularly with regard to water depth and available staging area. Details of the fabrication facility design can be found below in Appendix 1: Conceptual Design Memoranda.

Layout

OCC|COWI conducted a simplified just-in-time delivery analysis of the rate at which GBFs are fabricated and installed. The analysis considers anticipated seasons for both fabrication and offshore installation. In order to complete 50 foundations per year, the number required to complete the 500 MW project over two years, it was determined that 24 GBFs would be in produced simultaneously (in various stages of completion) on 6 parallel assembly lines.

Structural Elements

Concrete pile caps provide the skidding rails along which GBF are moved. Pile caps and pile loads were modeled using structural analysis finite element modeling software.

URS Corporation recommended three pile designs based on design loads provided by OCC|COWI. Additional geotechnical information and piling design can be found in Section 2.2.2 and Appendix 4: Geotechnical .

Elevator Platform

Once fabrication is complete, GBFs are skidded along a transfer rail and out an access pier to an elevator platform. The elevator platform is lowered into the water using a system of synchronized winches and cables. Figure 3-3 shows an example of the Syncrolift® by Rolls Royce Naval Marine, Inc. elevator platform lowering a large concrete structure into the water.

Figure 3-3: Syncrolift® System (Photo Courtesy of Rolls Royce Naval Marine, Inc.)

Once lowered, the GBF is able to take advantage of its integrated buoyancy chambers, reducing the effective weight of the system and facilitating the innovative supplemental flotation system to transport and install the GBF offshore, discussed further in the following section.

3.1.2.2 Transit with Supplemental Flotation

OCC|COWI developed an innovative installation system for the GBF designed for the Freshwater project. The installation concept involves a semi-floating GBF, which is transported and installed offshore by supplemental flotation units. After GBFs are produced assembly-line style in a specially designed casting yard facility and lowered into the water, they will be transported to the staging area and ultimately to the project site by floating the foundations using their internal buoyancy, supplemented by additional flotation units, eliminating the need for expensive offshore heavy lift crane barges during installation. Details of the supplemental flotation concept can be found in Appendix 1: Conceptual Design Memoranda; select findings are discussed below.

The supplemental floatation pontoon system alternatives were developed with the following objectives:

- Provide a pontoon concept that can be fabricated at a local shipyard, using local expertise (large floating cranes are not regionally available)

- Minimize offshore construction of GBF by towing complete foundation out to site
- Use a supplemental concept that does not require a specialized tow configuration, but can be towed by local tugs already servicing the Great Lakes region
- Provide a stable platform for the use of a winch system, to safely transport and install the GBF offshore

The stability of the conceptual system was compared to The Code of Federal Regulations of the USA, Chapter 9, Title 46 (Shipping), Section 151, Section 10-5 as applicable to the Great Lakes.

Design Process

OCC|COWI prepared a task specific design basis to develop the supplemental flotation unit concept design (summarized in Appendix 1: Conceptual Design Memoranda).

During the conceptual design of the semi-floating GBF, the geotechnical stability and structural integrity of the GBF were analyzed for buoyancy chamber heights (BCH) of 4, 5, 6, and 7m (13, 16, 20 and 23ft). The intent of the alternative BCHs is to allow for optimization of the fabrication cost of the GBF relative to the supplemental flotation units, from both cost and installation efficiency perspectives, while maintaining a stable system.

Alternative concepts 1 and 2 described below are both constrained by a 26m (85ft) elevator shaft width. Limiting the pontoon system width minimizes the span required by the GBF elevator platform, effectively minimizing the cost of constructing and installing the elevator platform. Expanding the system longitudinally will not increase the span of the system and can be achieved by lengthening the support piers.

The revised semi-floating GBF that utilized the LEEDCo geotechnical program data will require a slightly wider platform [29m (95.1-ft)].

Alternative Float Systems Considered

Three (3) pontoon system alternatives were initially considered and compared to optimize dimensional constraints and minimize costs of transporting the GBF to the site.

Table 3-2: Supplementary Floatation System Alternatives

Supplementary Floatation Pontoon Dimension Alternatives Considered				
Designation	**Length "b" (m)**	**Beam "a" (m)**	**Barge Surface Area (m^2)**	**Comments**
Alternative 1	26	26	676	Fixed dimensions, square system. System failed initial buoyancy check - No further stability calculations applied.
Alternative 1A	b	a	a^2	System length equals system width - Allows for extension of "a" and "b" uniformly, maintaining square composite system.
Alternative 2	b	26	a X 26	System width is fixed, and system length extended as needed to achieve stability.

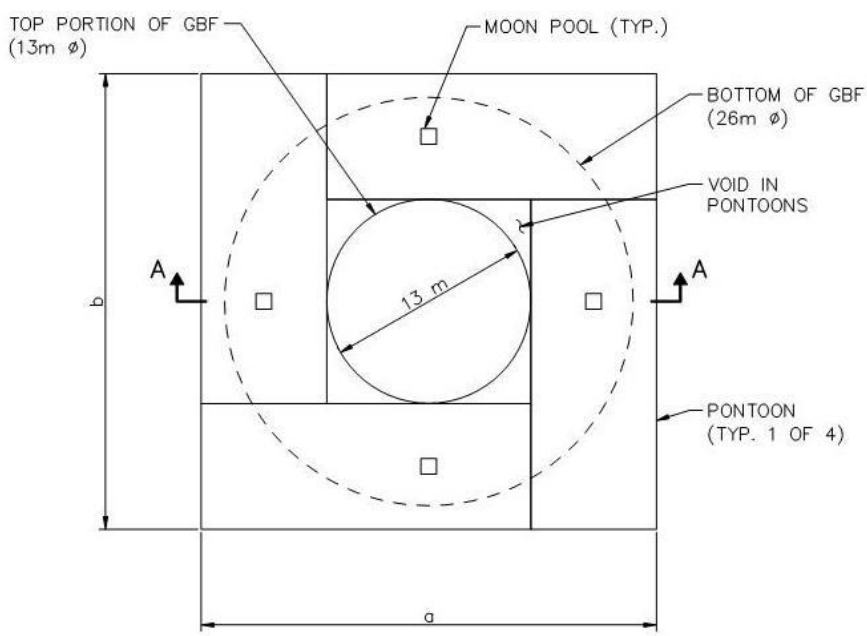

Figure 3-4: Typical pontoon system configuration of beam "a" and length "b".

The metacentric height and righting moment calculations results demonstrate that the system is most susceptible to instability and rotational disturbance while in the tow position, when the GBF is pulled tightly to the supplemental floatation unit (see Figure 3-5). As such the following areas of future study consider methods of increasing the system stability without adding considerably to the cost of towing and installation.

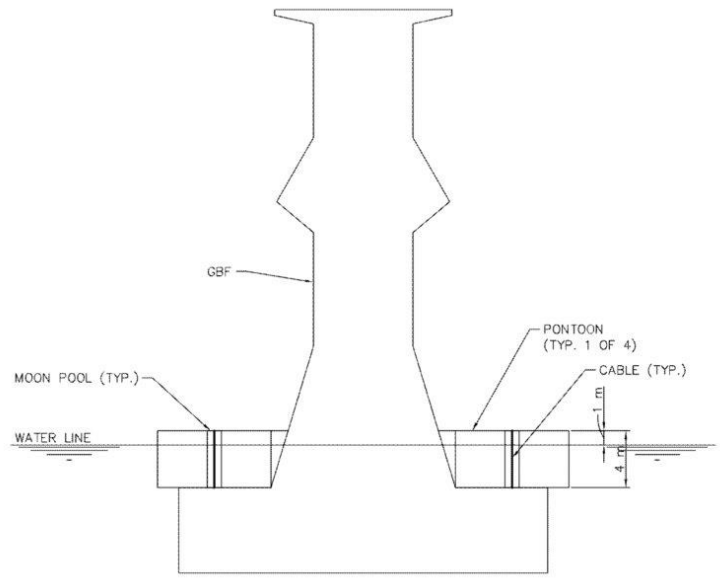

Figure 3-5: GBF in tow position, limiting position for system stability (winches not shown).

Alternative design concepts which will increase overall stability of the floating system include the following:

- Increase span of elevator deck to accommodate a composite square supplemental floatation system (Alternative 1A)
- Tow GBF in lowered (partially submerged) position
- Increase the pontoon freeboard by 2 to 3m (6.6 to 9.8ft)
- Use winch heave compensation system to increase stability of unit during tow
- Utilize different pontoon systems / configurations for in harbor and offshore transport.

Conclusions

The above analysis indicates that the system is constrained by stability indicators when the GBF is in the tow position.

Alterations to either the supplemental floatation dimensions or elevator constraints will ultimately have to be made to increase stability of the system to standard accepted levels. According to The Code of Federal Regulations, an acceptable minimum Righting Moment is 4.6 m*deg (15 ft*deg) for the Great Lakes (winter) (CRF, 2002). Applying one or more of the alternatives presented above can improve system stability to required levels, allowing for safe transport and installation of the GBF.

3.1.2.3 Barge Mounted Winch System

The winch system concepts were generated based on the following considerations:

- Provide a cost effective alternative to a large crane barge system
- Create a more controlled and accurate process for transporting and placing the GBF
- Simplify the operations and man-machine interface
- Create a safe and efficient way in transporting and placing the GBF

The analysis relied primarily on manufacturer provided information, although applicable sections of the API code were also consulted.

The transportation of the concrete GBF entails the utilization of four pontoons and a winch system (Appendix 2: Concept Sketches, SK-15-01). The winch system will pick up the GBF, transport it, and then lower it into place on the seabed (Appendix 2: Concept Sketches, SK-15-02 and SK-15-03). When the semi-floating type GBF or GBF with penetration skirt is moved into the water, the integrated buoyancy chambers provide a substantial amount of floatation. However, even with the GBF's significant amount of buoyancy, the concept design for the winch system considered a design load of approximately 1,200 tonnes (1,300 tons).

It is proposed that the Freshwater project proceed with an electrically driven winch as it is more reliable, safer (personnel and environmental) and efficient than an electro-hydraulically driven winch. Also, several different potential winch configurations were considered and it was determined that a multi-part pulley system, as shown in Figure 3-6 below, should be utilized as it will greatly reduce the cost, size and complexity of the system.

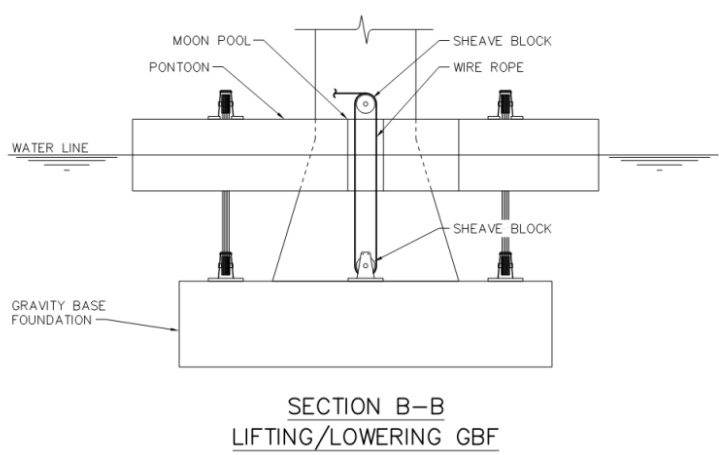

Figure 3-6: Winch with a Multi-Fall Arrangement Pulley System

It is recommended that a passive heave compensation (PHC) system is incorporated into the concept design of the winch system. A PHC system will absorb the

heaving motions of the pontoons, reducing the GBF's relative motion in respect to the pontoons, and consequently, allowing for the safe deployment of the GBF. The Freshwater team also considered the integration of an active heave compensation (AHC) system, but due to the size and weight of the GBF it was determined that a PHC system would be sufficient. Furthermore, the incorporation of a heave compensation system will greatly increase the precision and control of the GBF during the installation process as well as increasing the environmental operational periods.

The deck layout will be dependent upon size of the wire rope, the width of the winch drum and the minimum offset distance to the first turning sheave. A power pack will also need to be installed on one of the pontoons to supply energy to the winches. The on-deck components will require environmental protection from wave action and other inclement weather occurrences.

It should be noted that the size and overall cost of the whole system is greatly dependent on the design safety factor which is contingent on the codes and standards used for the design. Typically a safety factor of 1.2:1 is used in the design of a winch and according to API Specification 2C, for Offshore Pedestal-mounted Cranes, a design safety factor between 1.2:1 and 1.5:1 is typically used for the design of crane-support structures. Also, according to API Specification 2C the typical design safety factor for wire rope is between 3:1 and 5:1. Assuming a five part pulley system, it has been determined that a 50 mm (2in) wire rope would be required.

3.1.2.4 Gravity Base Foundation with Integrated Tower

Associated concept summaries have discussed design, assembly and transport of semi-floating GBFs via supplemental floatation (pontoons). The alternative concept described herein builds on the assembly and installation methods previously discussed by incorporating near-shore installation of the turbine tower to the GBF assembly prior to transporting the foundation offshore.

The integrated tower/GBF concepts were generated based on the following considerations:

- Shorten the duration of offshore installation activities with a view to ultimately lower cost of construction
- Limit the need for offshore jack-up barge and staging vessel
- Reduce labor costs by limiting complicated offshore installation of turbine tower
- Provide a stable means of waterborne transport (custom barge) for integrated tower/GBF, with a view to efficiency and safety
- Provide a means of transportation offshore that is logistically and physically compatible with supplemental pontoon system design concept
- Incorporate built-in winches to safely, stably lower the GBF and turbine tower to the lakebed

Design Process

Buoyancy and stability calculations involved in modifying the transport and assembly systems to include the turbine tower are discussed in Appendix 1: Conceptual Design Memoranda GBF with Integrated Tower Summary. During the concept development process, OCC|COWI analyzed 3 scenarios, each with an accompanying set of stability calculations. Each set of calculations served to identify supplemental floatation requirements for floatation and ultimately static stability under tow. For a complete description of the concept design process, calculations, and assumptions see Appendix 1: Conceptual Design Memoranda, GBF with Integrated Tower Summary.

The first scenario holds barge plan surface area constant. The second scenario explores the feasibility of a 23m (75ft) beam restriction. The third scenario ultimately determines barge dimensions required to achieve minimum longitudinal and transverse stability specified by the Code of Federal Regulations (CFR) for the Great Lakes (CFR 46, 2002). Results of these calculations were analyzed to optimize dimensions of the barge concept proposed to float the integrated tower/GBF to the project site.

Calculation Results

The third scenario described above was determined to control the barge LOA and beam required to achieve minimum intact transverse stability per CFR (CFR 46, 2002), using a 3:1 LOA to beam ratio. Previous calculations were limited by barge beam or overall barge plan area. While these calculations were important exercises in determining the system sensitivity to dimensional restrictions, they ultimately demonstrated that the barge system needed to be expanded by both length and width to approximate 15 ft*degrees (4.6 m*degrees) of intact transverse stability. The results of the following calculations yield an optimized barge concept.

The calculations described above yield a barge 35m (115ft) wide by 105m (344ft) long. Intact transverse stability for a barge of these dimensions comes close to CFR-recommended stability of 4.6 m*degrees (15 ft*degrees) for Test I conditions (where max angle of heel = angle of emergence) however Test II (where max angle of heel = deck overtopping angle) results exceed CFR recommendations for intact transverse stability.

Table 3-3: Basic barge dimensions required to achieve desired intact transverse stability (metric, US standard units).

Approximate Barge Parameters Required for Stability								
Parameter	**Test I Results (Max Angle of Heel = Angle of Emmergence)**				**Test II Results (Angle of Heel = Deck Overtopping Angle)**			
	SI Units		**US Units**		**SI Units**		**US Units**	
LOA	105	m	344	ft	105	m	344	ft
Beam	35	m	115	ft	35	Ft	115	ft
Stability	**4.3**	**m*deg**	**14**	**ft*deg**	**20**	**m*deg**	**67**	**ft*deg**

Transportation and Installation Sequence

The following implementation sequence is proposed to exploit favorable conditions associated with working within a protected harbor, and in close proximity to land-based facilities.

- The GBF is fabricated, lowered into the water, and then lifted by a supplemental floatation (pontoon) system fitted with hydraulic winches, as described in Section 3.1.2.2, above.

- The pontoon system transports the GBF quay-side and lowers it to a leveled area.

- The turbine tower is installed to the GBF via land-based crane and commissioned to the greatest extent possible.

- The GBF-turbine tower assembly is supported by a notched barge (see Figure 3-7) and lifted into tow position.

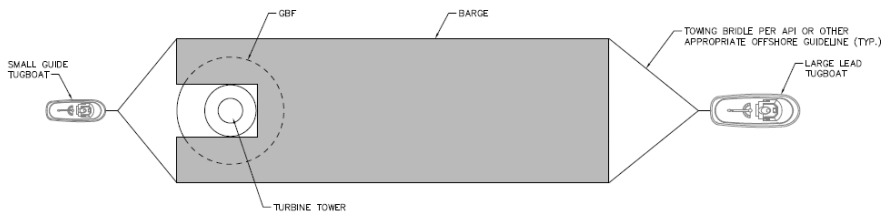

Figure 3-7: Plan view of tugs, GBF tower assembly, and notched barge during tow.

- The turbine tower is braced by a tower support structure (see Figure 3-8 as tugs tow the assembly from the pier to a designated staging area, and eventually out to the project site (see Figure 3-7).

- Once the barge reaches the installation location, the support collar will be disengaged and barge-mounted winches will be used to lower the GBF-tower assembly to the prepared lakebed (see Figure 3-8).

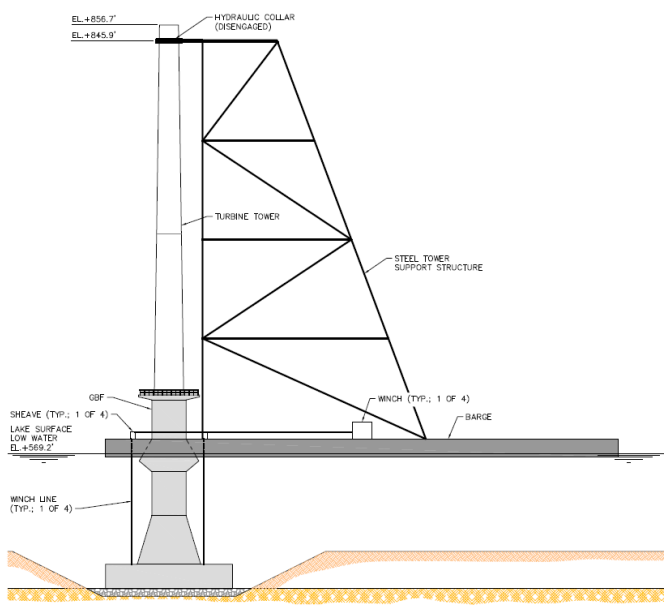

Figure 3-8: GBF lowered to lakebed

Recommendations

The conceptual analysis described herein suggests that an integrated GBF/tower system could feasibly be transported from Cleveland harbor to the offshore project site and lowered to the lakebed by the transport vessel. Prior to implementation, a full dynamic analysis of the system is recommended. Also coordinating between tasks to perform a holistic review of system interchangeability is a recommended area of future study.

3.1.2.5 Detailed Design and Construction Risk Management Matrix

RISK FACTOR	FRESHWATER APPROACH TO MITIGATE RISK
1. Design based on accurate site conditions. Due to the unique nature of the utility scale project site and its remote location, there may be many unknowns regarding existing site conditions.	If this project were to advance, significant field investigations will be required. This work will include bathymetric surveys, geophysical surveys and a complete geotechnical program. A program to better define the ice and wave climate is also needed.
2. Constructability of design. Design engineering team must take into account issues associated with the challenges of constructing that design at this particular site.	Freshwater will engage construction subcontractors in the conceptual and final design process to bring practical field-construction experience to bear on the selection of the most cost-effective design. The availability of large barges and cranes, their cost, their risk of operation and the impact on the schedule if they are delayed in shipment to the site, are all construction factors that will be evaluated in the design phase to assure constructability of the design. Limitation of the Great Lakes canal system will need to be taken into account.
3. Design meets all applicable codes and standards. Assure that design meets all government specifications, local Codes and Standards and best engineering practices.	Freshwater's design team will be thoroughly familiar with the project specifications and research any local, federal and industry Codes at the beginning of the design phase. A certification agency will have to be identified and engaged early in the process.
4. Design will meet performance requirements. Assure that the design will perform as projected.	Performance assurance begins with the proper selection of the major equipment – the wind turbine - and the foundation. This selection utilizes the expertise of several parties: the Wind Resource Assessment consultant (NREL), the turbine manufacturers, and Freshwater's in-house and third-party design team. All these parties, including the certification agent, will be part of our integrated design team.
5. Labor availability and productivity. Due to the inexperience of executing this type of project in North America, there is greater risk of maintaining the construction quality and schedule.	Freshwater's concepts are based on locally available skilled labor as required. Through our Subrecipient, OCC|COWI, European experience will be brought into the project throughout the project cycle.

RISK FACTOR	FRESHWATER APPROACH TO MITIGATE RISK
6. Major construction equipment availability. Due to the lack of resources at this location and the typical need for large, specialized construction equipment (barges and cranes), the key construction tools for this project were adjusted with innovative solutions. The equipment availability and mobilization cost and schedule will have an important impact on the project and could pose a cost and schedule risk if performed in the traditional European way.	Working closely with the Subrecipient Weeks Marine, the Freshwater design team has developed innovative designs to reduce or eliminate the need for larges specialized equipment for the foundation installation.
7. Materials and equipment delivery. This project will require large quantities of construction materials. In addition to the major equipment (turbines, major electrical gear, etc.) even smaller components will need to be shipped to the work-site from regional, national and international locations. This poses risks to the construction schedule from potential shipping delays.	See comments for Item (6) above. In addition, once the project moves ahead, Freshwater will work closely with major equipment vendors to coordinate the timing of major equipment delivery to match the construction activities in the field. Construction management and scheduling tools will be implemented and contingency planning will be utilized.
8. Weather delays. The potential risk of weather-related delays is even greater given the amount of work being done from barges subject to adverse lake conditions, including ice. In addition to the impact of weather on work conditions, weather could delay the delivery of building materials and equipment as well as construction equipment.	The Freshwater construction contractor will have to closely monitor seven-day advance weather and sea conditions forecasts. Freshwater's project team will also closely monitor all materials and equipment delivery schedules including key milestones that could affect schedule. If necessary, schedules may be revised to accommodate unavoidable delays and assure that on-site work is done efficiently and safely.
9. Unforeseen conditions. Due to the undocumented nature of this site, there may be unforeseen site conditions that could affect project costs and schedule.	These are mitigated by use of the extensive and careful up-front surveys performed as described in Item (1) above.
10. Regulatory requirements. Regulatory requirements could change over the relatively long development cycle of this type of project.	Freshwater will engage regulatory parties in the design development review process. The Freshwater design team will be actively engaged in the review process with the regulatory agencies and will carefully document all comments, requests for information, and review outcomes and decisions.

RISK FACTOR	FRESHWATER APPROACH TO MITIGATE RISK
11. Schedule risk general. All of the above items 5 through 10 can affect schedule.	Freshwater's project schedule will be developed and updated at the time of award to show the actual milestone dates and again at the start of construction. The schedule will be closely monitored throughout the design and construction phase by the Freshwater Project Team. Their proactive involvement will mitigate the occurrence of delays. Should a delay occur, Freshwater's management will immediately develop a mitigation plan and then take the necessary actions to ensure the project remains on schedule. The construction manager will work with the schedule to redirect tasks and work as possible to mitigate delays on entire schedule.
12. Construction meets specifications. Assure throughout construction that the project is being built in accordance with the specifications and all regulatory requirements.	The Freshwater engineering design team will be actively involved through all stages of the construction to assure that the finished product will meet all Codes, specifications and performance requirements.
13. Construction Hazards and Safety Concerns. There are numerous hazardous work tasks and safety concerns specific to this type of project and at the projected location, including: weather and adverse lake conditions (waves in the extreme, ice, etc.); proper anchor moorings and barge safety; crane operations; dredging and backfill operations from floating platforms; and diving operations.	A detailed Health and Safety Plan will be developed for each stage of the project. All contractors will be required to meet or exceed the minimum standards set by the Freshwater team applicable codes and standards.
14. Decommissioning Permit requirements will require the offshore wind farm to be decommissioned and removed at the end of the service life.	It is critical that financial vehicles are established where by the wind farm can be complete decommissioned at the end of its service life. This might include a combination of escrow account, surety bonding and letters of credit.

3.1.2.6 Estimated Costs

Engineering estimates of construction costs (Opinions of Probable Costs, or OPC's) were prepared using OCC|COWI's best judgment as experienced and qualified professional engineers, familiar with the construction industry. Where possible, specialty contractors and vendors were consulted for guidance with particular elements where their particular expertise facilitated the production of the OPC's.

Project team partner Weeks Marine, Inc. provided significant direction, input and review for the OPCs.

Local union contracts and Federal Davis-Bacon wage rates were utilized to develop the labor rates and fringe benefits for the many trades anticipated to participate in the construction of the Freshwater project.

Due to the preliminary nature of the design, the OPC's are considered Class 4 estimates in accordance with the Cost Estimate Classification System, AACE International Recommended Practice No. 18R-97. The Class 4 estimate is typical of a project in its early stages whereby the level of definition is at a study or feasibility level with accordingly low level of definition.

The costs prepared for the Freshwater project represent a "most likely cost" type of projection and do not include contingency costs. The intent of this effort is to most accurately project installed costs in order to assist Freshwater in determining the LCOE for a utility scale project in a semi-developed offshore wind industry in the Great Lakes.

With regard to preparation of OPC's, it must be noted that OCC|COWI has no control over the cost of labor, materials, equipment, or services furnished by others, over a Contractor's methods of determining prices, over competitive bidding or market conditions.

A tabular summary of estimated costs is shown in Table 3-4: Estimated Cost Summary for GBF Fabrication and Installation. An OPC for each key innovation concept is located in Appendix 3: Opinion of Probable Cost.

Gravity Base Foundation and Installation Summary

- Cost summary values expressed per GBF
- Summary based on 100 GBF units

Table 3-4: Estimated Cost Summary for GBF Fabrication and Installation

GBF Type	Fabrication Yard [1] ($1000s)	Fabrication - Equipment, Labor and Materials ($1000s)	Supplemental Pontoons and Winch Systems ($1000s)	Transport Fab Yard to Site ($1000s)	Installation[3] ($1000s)	Savings Due to Integrat-ed Tower Assembly ($1000s)	Total Cost per Unit [2] ($1000s)
Semi-Floating	$110	$2,340	$370	$70	$1,670	$0	$4,560
GBF with Penetration Skirt	$110	$2,340	$370	$70	$1,890	$0	$4,780
Integrated Assembly with Tower - Semi-Floating	$110	$2,350	$780	$70	$1,670	$410	$4,570
Integrated Assembly with Tower - GBF with Penetra-tion Skirt	$110	$2,350	$780	$70	$1,890	$410	$4,790

Notes:

1 This Fabrication Yard is anticipated to produce 50 foundations per year and have a service life of 20 years.

2 Mobilization for all equipment is spread evenly over 100 GBF units.

3 Installation costs reported for Integrated Tower Foundations accounts for installation cost of integrated GBF with tower and associated cost savings anticipated as a result of reduced installation time offshore. Savings of reduced time offshore provided by project partner, NREL.

3.1.3 Subtask 5.3 Turbine Innovations

NREL employed expertise in state of the art wind turbine technology and engineering judgment to evaluate a set of component-level innovations scaled for the mild wind resource climate. Rotor and hub height innovations were considered to maximize energy capture for the selected site while minimizing associated BOS costs necessary to support the increased rotor diameter.

Using site-specific wind resource data, soil parameters, and a subset of offshore wind plant cost modeling tools, NREL determined an optimized rotor diameter and hub height of 136 m (446ft) and 90 m (295ft), respectively. NREL's approach, assumptions, and full discussion of results are included in the Optimized Rotor Design report found in Appendix 5: National Renewable Energy Laboratory Reports. As per the optimized rotor report, the following table presents a snapshot of the changes in capital expenditures for this innovation only.

Table 3-5: Optimized Diameter and Hub Height.

Parameter	Optimized Turbine	
	Meters (m)	Feet (ft)
Rotor Diameter	136	446
Hub Height	90	295

Table 3-6: Effect of Optimized Turbine Innovations on LCOE.

Parameter	Baseline	Optimized
Turbine Cost ($/kW)	**258**	**301**
BOS Cost ($/kW)	**2,194**	**2,305**
LCOE ($/kWh)	**0.1594**	**0.1586**

These values are not meant to be respective of the entire Freshwater study.

3.1.4 Subtask 5.4 Wind Plant Layout

NREL used OpenWind Enterprise to model power output and wake effects, in order to develop an optimized wind plant layout for the Freshwater Project. Detailed wind resource data was analyzed to generate a layout which maximizes energy capture while minimizing potential capital investment associated with electrical cabling infrastructure.

The optimized wind plant layout is designed to accommodate 100, 5MW turbines in a gridded layout. Wake losses, grid orientation, and cable layouts were all analyzed and compared to produce an optimized plant layout and interconnection strategy. Calculations demonstrated that the eastern site, a hypothetical project area of approximately 418 km^2 (161mi^2), is sufficient to accommodate approximately 2000 MW of wind capacity. The maximum capacity of the hypothetical area was found to be 1371 MW, using 8D by 12D spacing. For a detailed discussion of NREL's analysis procedures and key findings see Appendix 5: National Renewable Energy Laboratory Reports, Wind Farm Plant Layout.

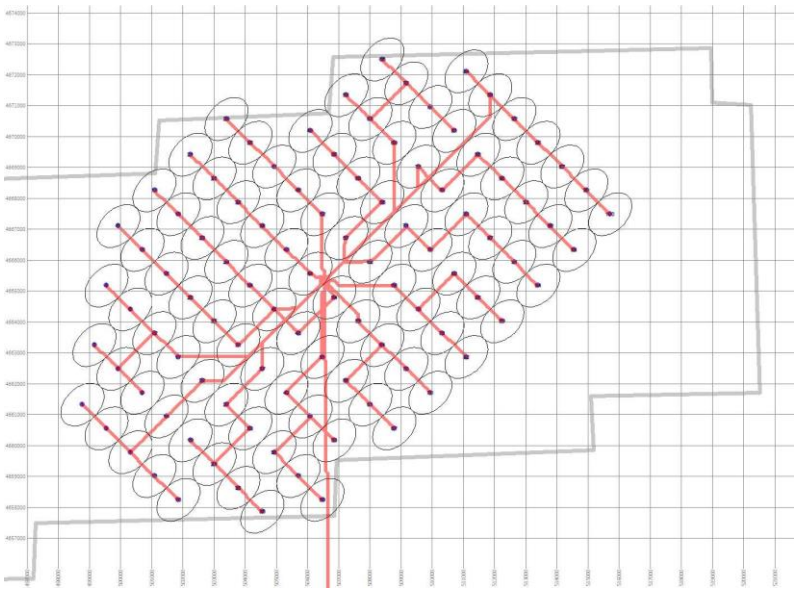

Figure 3-9: Sample turbine and cable layout as computed by OpenWind.

By optimizing the layout for wake effects and cable costs, NREL was able to demonstrate an anticipated savings of $0.0189/kwh.

3.1.5 Subtask 5.5 O&M Strategies

NREL assessed turbine and wind plant innovations to develop an optimized O&M strategy appropriate for the selected project site using ECN O&M planning software. Innovative O&M strategies involved with using helicopters and icebreaking vessels were compared to the baseline strategy to evaluate effects on the LCOE.

NREL's analysis of O&M strategies considers operational challenges associated with icing in the project area. The impact of project scale, and increasingly reliable turbine components (i.e. drive trains) was evaluated in connection with the proposed O&M strategy. Component failure rates and repair strategies were taken into consideration, as O&M costs are directly dependant on turbine component reliability. The analysis considers using a helicopter in lieu of a workboat, to mobilize for

O&M activities during unfavorable environmental conditions. Turbine availability, costs and Annual Energy Production for each O&M strategy are found below in Table 3-7. For a full discussion of NREL's assumtions, modeling limitations, and results see Appendix 5: National Renewable Energy Laboratory Reports, Operations and Maintenance.

Table 3-7: NREL O&M Scenarios and Energy Production.

Baseline Operation and Maintenance Scenarios	Availability (%)	Costs ($/kWh)	Annual Energy Production (MWh)
Workboat	87.6	0.053	1,218,000
Helicopter	86.9	0.054	1,204,000
Ice-breaking tug	87.8	0.055	1,224,000

4 Task 6.0 Optimized LCOE Model

NREL modeled innovative offshore project concepts at the component level, and modified the Wind Turbine Design Cost and Scaling model and Balance of System model to reflect the innovations explored throughout the project. The cost and performance of hypothetical innovations was benchmarked against baseline technology, and a sensitivity analysis of the primary cost drivers was conducted to evaluate the proposed project design. Using the updated baseline LCOE, discussed in Section 4, cost reductions associated with all project innovations proposed were compared and summarized as a percent reduction in the LCOE.

4.1 LCOE Model Input Parameters

Operating parameters for the baseline and conceptual wind farm were summarized and established as input values for the modified LCOE model. Innovations included in summarized operating parameters shown in Table 4-1 include rotor diameter, hub height, foundation type, plant layout (array spacing), and interconnection location.

Table 4-1: LCOE Model Operating Parameters

Category	Baseline 500 MW Farm
Project Location	42° 4'54.54"N 80°52'45.54"W
Wind Plant Rating (MW)	500
# of Turbines	100
System Design Life (years)	20
Turbine Rating (kW)	5000
Rotor Diameter (m)	126
Hub Height (m)	90
Drivetrain Type	Geared
Foundation Type	Monopile
Distance to Interconnect (km) – Perry	21.6
Distance to O&M Port (km) – Ashtabula	21
Distance to Staging Port (Turbine) (km) - Cleveland	97
Distance to Staging Port (Foundation) (km) - Lorain	130
Water Depth (m)	22
Wind Speed at HH (m/s)	8.3
Weibull K	2.09
Wind Shear	0.11
Air Density (kg/m3)	1.225
Losses (%)	16.9
Availability (%)	91
Array Spacing (Baseline)	7d (E-W and N-S)
Array Spacing (Conceptual)	8 x 12 Array Offset

4.2 LCOE Model Results

Each innovation that contributed to lowering the LCOE was summarized individually throughout this report, and explained in detail in Appendix 5: National Renewable Energy Laboratory Reports and Appendix 1: Conceptual Design Memoranda. Resulting turbine capital cost, balance of station cost, soft costs, annual operating costs, and installed capital costs were tabulated to generate a LCOE in $/kWh. Table 4-2 below summarizes findings including a conceptual LCOE of $0.1402. This represents a 22.3% decrease in LCOE from the established baseline LCOE of $0.1715.

Table 4-2: LCOE Model Results

Category	Baseline 500 MW Farm	Conceptual 500 MW Farm ($/kW)
Net Annual Energy Production (MWh)	1,599,630	1,750,106
Turbine Capital Cost ($/kW)	2079	2182
Balance of Station Cost ($/kW)	2703	2076
Soft Costs ($/kW)	914	894
Annual Operating Expenses ($/kW/yr)	155	129
Discount Rate	7%	7%
Insurance, Warranty and Fees (IWF)	1%	1%
Installed Capital Cost (ICC) ($/kW)	5696	5152
LCOE ($/kWh)	$0.1715	$0.1402
Total LCOE Improvement		22.3%

4.3 Conclusions

The project objective was to demonstrate how project innovations applied to a specific region, the shallow water of the Great Lakes, can reduce the system level costs for wind energy. The project analysis included a detail study of different foundations and installation concepts for the soil composition and shallow waters, a larger rotor for the low wind speed, an optimized layout leveraging cable costs with AEP, and improved operation and maintenance strategy. These innovations reduced the LCOE by 22.3% over the project baseline.

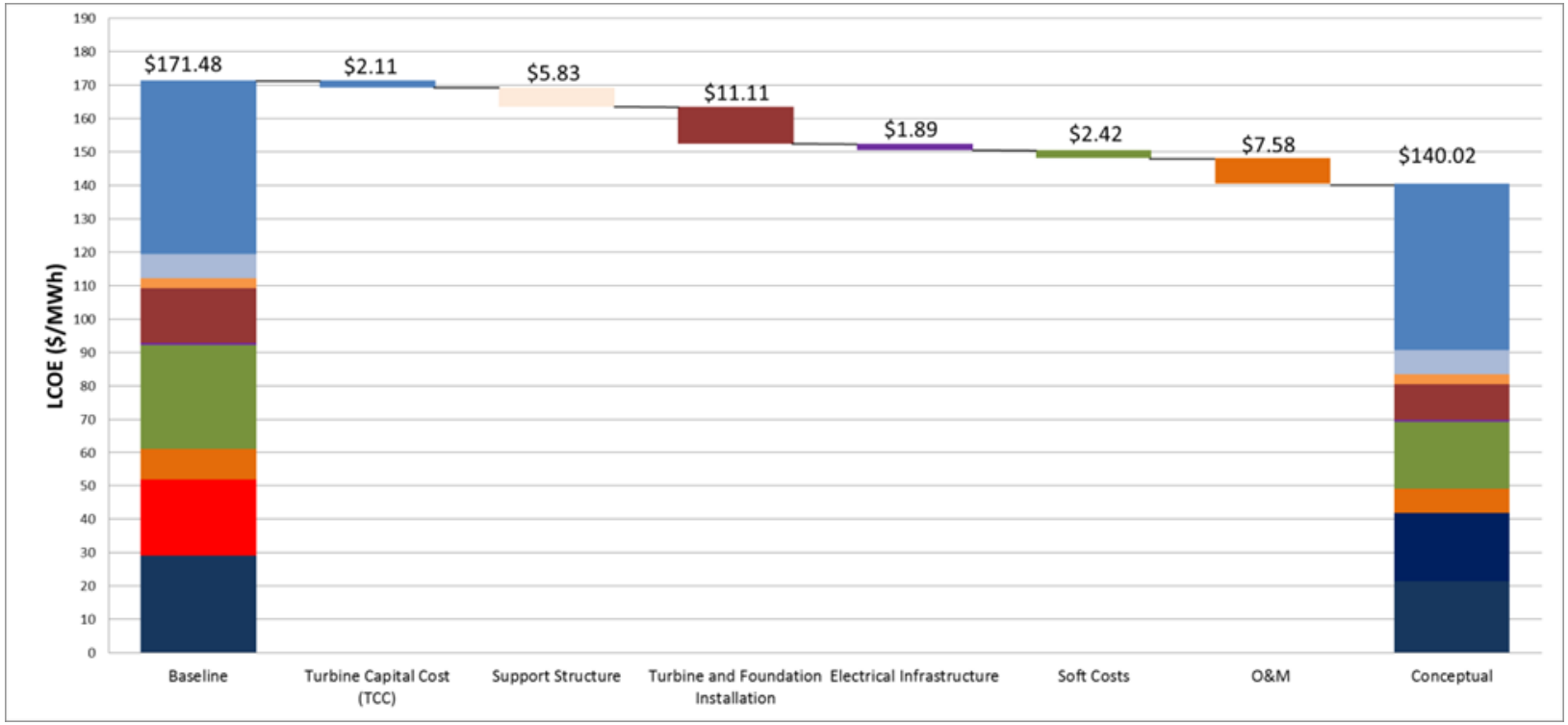

Figure 4-1: Waterfall Chart of Innovations and Optimizations.

The overarching objective of the project was to demonstrate how novel considerations for a specific region, the shallow water of the Great Lakes, can reduce the system level costs for wind energy. For this project, the analysis included a detailed study of different foundations and installation concepts for the soil composition and shallow waters, a larger rotor for the low wind speed, an optimized layout leveraging cable costs with AEP, and improved operation and maintenance strategy. These innovations reduced the LCOE by 22.3% over the project baseline. Figure 4-1 shows the waterfall chart demonstrating the changes from the baseline project to the conceptual project and effects of the innovations investigated in the project.

The goal of FOA-415 was to lower the LCOE in the Great Lakes by 25%. There are potential areas for continuing analysis that may further reduce the LCOE to, or beyond, the 25% targeted by this study, they include:

- BOS model is under development and may currently underestimate electrical infrastructure costs.
- Baselione monopile cost estimates currently consider simplified soil conditions and models maybe updated to consider additional geotechnical parameters
- Vessel day rate assumptions for a new build TIV based in the Great Lakes came from one source and require further investigation.
- Rotor optimization shows that a turbine that does not have a restriction in either blade tip height or clearance could increase energy production or cost reductions.
- Ice-breaking tugs still have limitations that can be addressed by using United States Coast Guard ice-breakers to further increase access and therefore decrease turbine downtime.
- Investigate suitable repair strategies to reduce dependencies on expensive purpose-built TIVs.
- Conduct research on advanced vessel technologies that allow for fewer restrictions on wave and wind climates to reduce the downtime for offshore O&M activities.
- Carry out additional studies on regional climate variations such as wind and wave characteristics to further understand how these site climates affect site O&M costs and downtime.

Based on the innovations targeted during the "Shallow Water Optimization for the Great Lakes" study, it is reasonable to assume that the reductions in LCOE would

be equal to or greater than the reported 22.3% when applying these technological improvements to a shallow water offshore wind farm.

5 Task 7.0 Project Management and Reporting

The Project Management and Reporting task was followed throughout the project.

5.1 Project Management

A strong Project Management team was used to ensure that this project was successfully completed on time and within budget. The project needs to be clearly articulated to those carrying out the tasks, inside or outside the prime organization. Task scopes, milestones, interim deliverables, project schedules and regular project status updates are part of the documentation shared between the Freshwater Team and the DOE.

5.1.1 Regular Meetings/Conference Calls with DOE Personnel

Regular monthly conference calls were held with DOE personnel from May, 2012 to September, 2013. The conference calls were structured to review progress made during the preceding month on each of the technical tasks, present key findings, provide an opportunity for Freshwater to raise questions (technical or contractual) and allow DOE to ask questions (technical or contractual).

During the September, 2013 teleconference, U.S. DOE changed the monthly calls to Quarterly conference calls with the first call occurring in November 2013.

Approximately three (3) weeks after the Conceptual Analysis Report was submitted, the monthly teleconference was dedicated to Freshwater presenting the findings of that phase 1 report.

5.1.2 Regular Meetings/Conference Calls with Team Personnel

In order to maintain the project goals, objectives, schedule and budget, regular meeting were held between project team personnel.

The design team (COWI) worked closely with several offices located in Denmark, Oakland, CA, Charleston, SC and Trumbull, CT. Therefore the design tasks were managed by one entity.

A very important Team member was NREL. NREL required input from Freshwater in order to complete their assignments. Freshwater, OCC|COWI and NREL maintained close contact via email, phone calls and a regularly scheduled monthly conference call held the week preceding the monthly DOE conference call. This schedule ensured that Freshwater was kept apprised of NREL's work in progress, deliverables' status and issues that may impact the success of the project.

Freshwater had regular communications with other team members:

- URS: for the development of the geotechnical desktop study;
- Weeks Marine: for the development of cost estimates; and
- LEEDCo: for the geotechnical boring program results

The ability of these other project Team members to provide required deliverables and meet project goals, schedules and budgets was critical to the success of this project.

5.1.3 Project Schedules

The original project schedule called for the project to be completed during FY2014. This schedule was proposed by Freshwater during contract negotiations. During 2013 it was determined by Freshwater, in consultation with other Team members, that this schedule could be accelerated without impact to the quality of project deliverables or budgets.

It was critical to be sure that the new schedule could be met by NREL and Freshwater received a confirmation by NREL that this could be accomplished.

In consultation with DOE, it was decided to set a goal to submit this Concept Design Report by the end of December 2013. This decision was also impacted by a separate DOE contract, LEEDCo Icebreaker (DOE DE-EE0005989, where the results of the Freshwater project would be integrated into the LEEDCo Icebreaker Budget Period 1 foundation selection.

5.1.4 Quarterly Reports

Throughout the project, Quarterly Reports were submitted on time to DOE, identifying accomplishments during the preceding quarter, issues which may impact the project and milestones met.

5.1.5 Financial Reporting

Financial reporting was made to DOE monthly when the invoices were submitted for payment and as part of the Quarterly Reporting process.

Freshwater maintained a steady flow of work product within the original budget. Cost share was maintained with all Team members contributing to the project.

5.2 Reporting

There were two (2) primary deliverable reports submitted to DOE: The Concept Analysis Report and the Concept Design Report. Each primary report was supported by several task reports containing technical support documentation. The supplemental reports issued by the designer (COWI) were submitted to DOE for review and discussion prior to the primary reports being issued. NREL prepared several supplemental reports that are part of this report (Concept Design Report). These reports were not issued to DOE separately.

5.2.1 Conceptual Analysis Report

As discussed in Section 2.4, the Conceptual Analysis Report was issued on May 30, 2013.

5.2.2 Concept Design Report

This Conceptual Analysis and Design Report presents the results of the "Shallow Water Wind Optimization for the Great Lakes" study.

5.3 Presentation at Offshore Wind Conference

The results presented herein will be presented as a “webinar” to the staff of DOE in late February or early March 2014. A second presentation will be made at a leading U.S. offshore wind energy conference to expand the industry knowledge base (i.e. AWEA Offshore Wind Conference to be held in Atlantic City, NJ on October 7-8, 2014). The presentation will either be in the form of a session speaker or a “poster”, depending upon how the conference organizers would like to include this work.

6 Conclusions

The conclusions that have been reached by Freshwater are the following:

- It is feasible and cost effective to construct a specialty fabrication yard for this type of project. However, the capital investment for site improvements used for the example location at the Port of Cleveland would indicate that the facility should be considered for regional projects and, therefore, the investment can be applied to many projects over the twenty (20) year life of the facility.

- GBFs can be launched and transported to the wind farm location without the need for heavy lift equipment. Some modifications to the initial pontoon concepts are required to improve system stability during transport.

- An integrated GBF/turbine tower can be transported offshore and lowered into place using a notched barge fitted with a tower support structure, hydraulic collar, and winches. The system as presented could also include the port installation of the nacelle and blades if nacelle accelerations can be limited to acceptable levels. Full physical modeling of the system is recommended for future study.

- Based upon available geotechnical data, the GBF is a viable substructure to support a 5 MW turbine in Lake Erie.

- The GBF with penetration skirt is the technically best innovative foundation being investigated. The GBF with penetration skirt has the advantage of the least bottom disturbance by eliminating the need for dredging and placing a gravel bed before installing the foundation.

These conclusions have been summarized in a Technical Feasibility Matrix found in the next section.

6.1 Technical Feasibility Matrix

Freshwater identified nine (9) key performance indicators (KPI) that could be used to judge the merits of the proposed innovations. The KPIs are:

1. Technical Suitability and Track Record - Is the innovation appropriate for the site/project and has some variant of the innovation been successfully used on other projects?
2. Design & Fabrication Complexity - Is the innovation so complex that to develop a set of bid documents the design team will push the project into the "experimental" arena or make the design extremely difficult to build?
3. Innovation - Does the design introduce important elements that will help to reduce the LCOE?
4. Installation Risk - Are there significant unknowns that could significantly impact the ability to build the innovation or require contingencies (operations or financial) during installation?
5. Installation Complexity - Can the installation be completed using labor, equipment and materials currently found in the Cleveland region?
6. O&M - Will the innovation require special O&M during the life of the project?
7. Decommissioning - How will the innovation be removed at the end of the service life?
8. Supply Chain Support - What are the regional abilities to support the fabrication and installation of the innovation?
9. Regulatory - Will the innovation be difficult to permit?

The proposed innovations were ranked on a scale of 1 to 10 points for each KPI. Not all KPIs are equally important. Therefore a weighting system was developed and applied to the KPI measurements. The attached matrix summarizes Freshwater's conclusions.

Technical Feasibility Matrix

(Page 1 of 2)

Concept/Innovation	Technical Suitability and Track Record	Design & Fabrication Complexity (lower complexity, higher value)	Innovation	Installation Risk (higher risk, lower value)	Installation Complexity (lower complexity, higher value)	O&M (lower O&M, higher value)	Decommissioning (easier decommissioning, higher value)	Supply Chain Support	Regulatory	Total Score	Proceed To Be Included in SOPO Selection
Weighting	25%	10%	15%	5%	10%	5%	5%	10%	15%	100%	
Monopile Base case, open-end, steel Pile	7 Requires Ice cone (not included in prior designs). Issues with grout connection.	6 Requires TP and ice cone.	4 Ice cone required.	4 Availability of large capacity vessels and hammer. Soil conditions will require gravel ring.	7 Must be performed with specialized equipment.	8 Periodic inspection. Minimal O&M over the life of the project. Issues with grout for TP connection.	4 Monopile must be cut below the mudline.	8 Possible regional capabilities identified.	5 Issues with installing gravel ring and dredging.	6.0	No
Gravity Base Foundation Base case	10 Successfully installed to water depths exceeding 30m.	10 No special skills required	4 Not innovative.	3 Requires method for transport and installation with specialized, heavy lift equipment.	7 Requires dredging and sub bottom soil improvements.	10 Periodic inspection. Minimal O&M over the life of the project.	2 Difficult to remove. Should consider demolition in place to create new habitat.	10 Local trades can construct. Local material suppliers.	5 Issues with installing gravel base and dredging.	7.3	No
Semi-Floating Gravity Base Foundation With supplemental flotation	10 GBFs successfully installed to water depths exceeding 30m.	9 Will require integrated ballast tanks.	10 Eliminates need for heavy lift equipment.	8 Method developed where specialized equipment not required. Ballasting during deployment.	7 Requires dredging and sub bottom soil improvements. Ballasting during installation.	10 Periodic inspection. Minimal O&M over the life of the project.	7 Removal of internal ballast and re-float. Soil adhesion might be problematic.	10 Local trades can construct. Local material suppliers.	5 Issues with installing gravel base and dredging.	8.6	Yes
Gravity Base Foundation with Penetration Skirt With supplemental flotation	8 GBFs successfully installed to water depths exceeding 30m. Preliminary designs complete with steel skirt.	8 Will require open bottom and integrated grout injection system.	10 Eliminates need for heavy lift equipment. No dredging required.	6 Will required controlled de-ballasting to maintain vertical orientation.	8 Requires controlled ballasting and grout injection system.	10 Periodic inspection. Minimal O&M over the life of the project.	7 Removal of internal ballast and re-float. Soil adhesion might be problematic.	10 Local trades can construct. Local material suppliers.	9 Does not require dredging.	8.6	Yes

Technical Feasibility Matrix

(Page 2 of 2)

Concept/Innovation	Technical Suitability and Track Record	Design & Fabrication Complexity (lower complexity, higher value)	Innovation	Installation Risk (higher risk, lower value)	Installation Complexity (lower complexity, higher value)	O&M (lower O&M, higher value)	Decommissioning (easier decommissioning, higher value)	Supply Chain Support	Regulatory	Total Score	Proceed To Be Included in SOPO Selection
Weighting	25%	10%	15%	5%	10%	5%	5%	10%	15%	100%	
Fabrication Yard Port of Cleveland (Representative port only)	8 Adequate area for 50 foundations per year. Water depth limitations.	7 Requires pile supported jacking beams due to subsurface soil conditions.	8 Jacking beams and launching lift.	7 Possible subsurface obstructions.	9 Standard construction techniques required.	8 Jacking beam surface replacement and jacking system maintenance.	7 Will require removal of concrete jacking beams. Support piles to remain. Concrete to be recycled.	10 Local trades can construct. Local material suppliers.	8 No upland issues. Placing filling out to launching platform, shadow of launching platform, dredging under launching platform.	8.1	Yes
Supplemental Flotation Pontoons With winch system	10 System can be designed to support required loads. Sectional barges and winches widely used.	6 Will require special interconnection of barge sections and integrating the winch system.	8 Innovation solution to eliminate heavy lift equipment.	6 Sea state limitations. Heave compensator required to control offshore loads. Redundancy of cables.	7 Must be designed to be deployed around GBF held by launching lift.	8 Will require regular hull inspections and maintenance every 2 years. Pontoons can be hauled on GBF launching lift for maintenance. Winch system maintenance.	10 Dis-assembly and reuse when project(s) are completed.	10 Pontoons able to be fabricated locally. Winches installed on pontoons by local trades.	9 No major regulatory issues. Fuel handling.	8.6	Yes
Gravity Base Foundation with Integrated Tower With supplemental flotation and winch system	10 System can be designed to stably transport integrated tower.	5 Tower support structure, U-Barge and integrated winch system interconnections.	10 Innovative solution to reduce offshore installation costs.	6 Sea state limitations require further study.	9 Offshore installation will be of shorter duration but possibly more complex.	8 Will require regular hull inspections and maintenance every 2 years. Barge can be hauled on GBF launching lift for maintenance. Winch system maintenance.-	10 Potential application to other regional projects.	9 Barge can be fabricated locally. Winches installed on barge by local trades. This vessel as designed will not fit through Welland Canal.	9 No major regulatory issues. Fuel handling.	8.9	Yes-

7 References

AACE International. *Recommended Practice No. 18R-97, Cost Estimate Classification System - As Applied in Engineering, Procurement and Construction For the Process Industries, TCM Framework 7.3 Cost Estimating and Budgeting.* 2005.

Brown, T.G. and Seify, M.El., *A Unified Model for Rubble Ice Load and Behavior*, Final Report, National Research Council of Canada, Report No. PERD/CHC 5-119, December 2005.

C.F.R. Title 46, *Shipping*, Chapter 9, Section 151.10-5 (last updated October 1, 2002).

Dames and Moore, *Lake Bottom Geotechnical and Geophysical Studies*, Reports No. 5-1 & 5-2, May 1974.

Design of Offshore Wind Turbine Structures, Offshore Standard, DNV-OS- J101, 2011.

Douglas-Westwood, *Assessment of Vessel Requirement for US offshore Wind Sector,* Draft Report for U. S. DOE Offshore Wind Removing Market Barriers FOA, 2013.

Dynamics Modeling and Loads Analysis of an Offshore Floating Wind Turbine, Technical Report, NREL/TP-500-41958, November 2007.

Fingersh, L.; Hand, M.; and Laxson, A., *Wind Turbine Design Cost and Scaling Model*, NREL/TP-500-40566, Golden, CO: National Renewable Energy Laboratory, 2006.

Ice Loads on Wind Turbine Structures in Lake Erie, C-Core Final Report, R-08-014-566, November 2008.

Jonkman, J.; Butterfield, S.; Musial, W.; and Scott, G., *Definition of a 5-MW Reference*

Wind Turbine for Offshore System Development, NREL/TP-500-38060, Golden, CO: National Renewable Energy Laboratory, 2009.

Juwi GmbH, *Great Lakes Wind Energy Center Feasibility Study, Final Feasibility Report*, Cleveland, OH, 2009.

Lewin, David V. Corporation, *Report of Soil Conditions for Cleveland Port Authority Relocation Project* dated May 1991.

Maples, B.; Hand, M.; Musial, W., *Comparative Assessment of Direct Drive High Temperature Superconducting Generators in Multi-Megawatt Class Wind Turbines, pp. 40*; NREL Report No. TP-5000-49086, 2010.

Marschall, et al, Prepared by, *Final Feasibility Report, Great Lakes Wind Energy Center Feasibility Study* submitted to Cuyahoga County, April 2008.

Ohio Department of Natural Resources Office of Coastal Management, Map of *Wind Turbine Placement Favorability Analysis*, updated April 22, 2009.
Link:

Raamot Associates, *Geotechnical Investigation for Dock 22E*, dated March 1993.

Randolph, M. and Gourvenec, S., *Offshore Geotechnical Engineering*, Text Book, 2011.

Rawson and Tupper, *Basic Ship Theory*, Volume 1, Third Edition, Longman London and NY Print, 1983.

Verber, James, *Surface Water Movement, Western Lake Erie*, The Ohio Journal of Science, 53(1):42, January 1953.

URS Greiner, *As-Built Construction Plans for Dock 22 East Phase III Slip Improvements*, dated February 1999.

Woodward-Clyde, *Report: Summary of Findings, Site Geotechnical Investigation - Dock No. 22E Improvements, Port of Cleveland, Ohio* dated July 1998.

Appendix 1: Conceptual Design Memoranda

Regional Justification for Fabrication Facility

See attached memorandum

Fabrication Yard Summary

See attached memorandum

Semi Floating GBF Evaluation Report

See attached memorandum

Supplemental Flotation Summary

See attached memorandum

Barge Winch System Summary

See attached memorandum

GBF with Penetration Skirt Summary

See attached memorandum

GBF with Integrated Tower Summary

See attached memorandum

MEMO

TITLE	Regional Justification for Fabrication Facility
DATE	Original Date: October 15, 2012
	Modified Date: May 15, 2013
TO	Michael Hahn, U.S. DOE
COPY	Greg Matzat, U.S DOE
	Yelena Onnen, U.S. DOE
	Chris Wissemann, Freshwater Wind
	Scott Ameduri, Freshwater Wind
	Stanley White, Ocean and Coastal Consultants, Inc.
FROM	Brent Cooper
PROJECT NO	OCC_211080.000000

ADDRESS Ocean and Coastal Consultants, Inc.
35 Corporate Drive
Trumbull, CT 06611
USA

TEL (203) 268-5007
FAX (203) 268-8821
WWW ocean-coastal.com

1 Introduction

Organizations such as the National Renewable Energy Laboratory (NREL) and the Great Lakes Offshore Wind Energy Consortium have identified over 700 Gigawatts of Offshore Wind Energy potential in the Great Lakes, representing approximately one-fifth of the total offshore wind energy potential in the U.S.[1] Navigant Consulting has projected that up to one (1) GW of offshore wind will be deployed in U.S. waters of the Great Lakes by 2020 and up to six (6) GW will be deployed by 2030[2]. Numerous organizations, including the U.S. Department of Energy (DOE) and Freshwater Wind I, through this Offshore Wind System Optimization for Freshwater Project, are seeking to take advantage of the opportunity for offshore wind energy development on the Great Lakes.

Other organizations that have expressed interest in offshore wind projects on both Canadian and U.S. sides of the Great Lakes include:

- Bluewater Wind (Lake Michigan)
- City of Evanston, IL (Lake Michigan)
- Erie Wind Energy (Lake Erie)
- HAVGUL Clean Energym, AS (Lake Michigan)
- Lake Erie Alternative Power (Lake Erie)
- LEEDCo (Lake Erie)
- Mercury Wind Energy (Lake Michigan)
- New York Power Authority (Lake Erie & Lake Ontario)

[1] "Fact Sheet-Great Lakes Offshore Wind Energy Consortium". http://www1.eere.energy.gov/wind/pdfs/gl_mou_fact_sheet.pdf

[2] "U.S. Offshore Wind Manufacturing and Supply Chain Development." Navigant Consulting, Inc. 2013. Document Number DE-EE0005364

- Off Grid Technologies (Lake Michigan)
- Radial Wind (Lake Michigan)
- Scandia Wind Offshore, LLC (Lake Michigan)
- Southpoint Wind (Lake Erie, Lake St. Clair)
- Trillium (Lake Huron, Lake Ontario, Lake Superior)
- Windstream Energy (Lake Ontario)

Like other offshore wind initiatives, the initial cost of offshore wind is a challenge to developing the projects in the U.S. Certain industry groups have recognized the potential benefits of regional development as a way to reduce capital cost. An innovative concrete Gravity Base Foundation (GBF) fabrication yard has been proposed for the Freshwater project to streamline the fabrication process and, ultimately, reduce foundation costs. This facility has the potential to serve not only the Freshwater project, but to become a regional facility for other offshore wind developments in Lake Erie, as well as in the other Great Lakes.

One of the most significant challenges to moving large vessels in and out of the Great Lakes is the water depth and maximum vessel beam (width). "Salties", or vessels that travel to the Great Lakes from the ocean, need to be able to fit within the locks and channels interconnecting the Great Lakes and the Atlantic Ocean via the St. Lawrence Seaway. The maximum vessel size entering the Great Lakes is governed by the St. Lawrence Seaway Management Corporation[3]:

Maximum Ship Dimensions

- (1) Subject to subsection (5), no ship of more than 222.5m (730 ft) in overall length or 23.2m (76 ft) in extreme breadth shall transit.

- (2) No ship shall transit if any part of the ship or anything on the ship extends more than 35.5m (116.5 ft) above water level.

- (3) No ship shall transit if any part of its bridges or anything on the ship protrudes beyond the hull.

- (4) No ship's hull or superstructure when alongside a lock wall shall extend beyond the limits of the lock wall, as illustrated in [Appendix I of the Seaway Handbook].

- (5) A ship having a beam width in excess of 23.2m (76 ft) but not more than 23.8m (78 ft) and having dimensions that do not exceed the limits set out in the

[3] The St. Lawrence Seaway Management Corporation. "The Seaway Handbook" 2002 Edition. http://www.greatlakes-seaway.com

block diagram illustrated in Appendix I, or overall length in excess of 222.5m (730 ft) but not more than 225.5m (740 ft) shall, on application to the Manager of the Corporation, be considered for transit after review of the ship's drawings and, if accepted, shall transit in accordance with directions issued by the Manager and the Corporation.

The limiting locks are those found on the Welland Canal between Lakes Erie and Ontario, which are similar in size to the locks on the St. Lawrence Seaway. However, there are no locks separating Lakes Michigan, Huron and Lake Erie. The Soo Locks, which separate Lake Michigan from Lake Superior, are 33.5m (110 ft.) wide and 9.8m (32 ft.) deep.

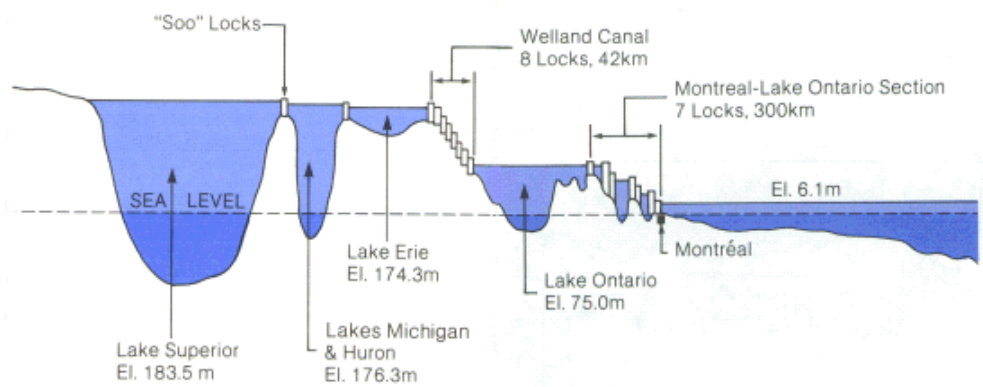

Figure 1: Great Lakes Locks[4]

Based on the site conditions (wind speed, design wave height, ice load and other environmental conditions, as well as geotechnical conditions) identified for the Freshwater project, OCC|COWI believes that the Gravity Base Foundation being developed for the Freshwater project is widely applicable within the Great Lakes due to its potential to resist ice loading, local content related to the fabrication and its ability to accommodate a range of turbine sizes and water depths.

The conceptual Freshwater GBF design calls for a buoyancy chamber diameter of 26m (85.3 ft). Though the existing dimension does not fit through the Welland Canal, this GBF could be fabricated at the proposed location in Cleveland and transported, floated and towed to project sites in Lakes Erie, Michigan, Huron and Superior, as well as Lake St. Clair.

Though the existing base diameter dimension does not fit through the Welland Canal, the existing design was optimized to minimize the buoyancy chamber height and structure weight. The GBF could be redesigned to optimize the buoyancy chamber

[4] http://www.great-lakes.net/teach/business/ship/ship_5.html

diameter, allowing the GBF to pass within the 23.2m (76 feet) maximum beam restriction in the Welland Canal and be towed to a project site in Lake Ontario.

2 Recommendations

To most appropriately evaluate the cost of energy in the Great Lakes, the costs of developing infrastructure-intensive landside facilities necessary to support offshore wind should not be assigned to a single front-runner project. Properly distributing the costs of the initial regional infrastructure will allow developers, regulators and investors to evaluate the cost of energy for the region. To facilitate a proper evaluation, OCC|COWI suggests that three (3) scenarios be evaluated for allocating the development costs for the GBF fabrication facility:

Scenario 1: Baseline Conservative Scenario
The fabrication facility is used only by the representative project over a period of two (2) years and producing 100 foundations. One percent (1%) of the facility development cost is applied to each foundation.

Scenario 2: Anticipated Scenario
The facility is used to fabricate foundations for multiple projects over an anticipated service life of 10 years. Foundations may increase in size over the service life. However, technology improvements are anticipated allowing the construction pace to be maintained. 500 foundations are produced. Assuming a straight line depreciation method to calculate the cost of energy, 0.2% of the facility development cost is applied to each foundation.

Scenario 3: Optimistic Scenario
The facility is used to fabricate foundations for multiple projects over an anticipated service life of 20 years. Foundations may increase in size and complexity over the service life of the facility. However, technology improvements are anticipated allowing the construction pace to be maintained. 1000 foundations are produced. Assuming a straight line depreciation method to calculate the cost of energy, 0.1% of the facility development cost is applied to each foundation.

Because the Great Lakes have significant potential for the development of offshore wind, the Freshwater project will proceed with **Scenario 3: Optimistic Scenario**.

APPENDIX -A

FOUNDATION GEOMETRY

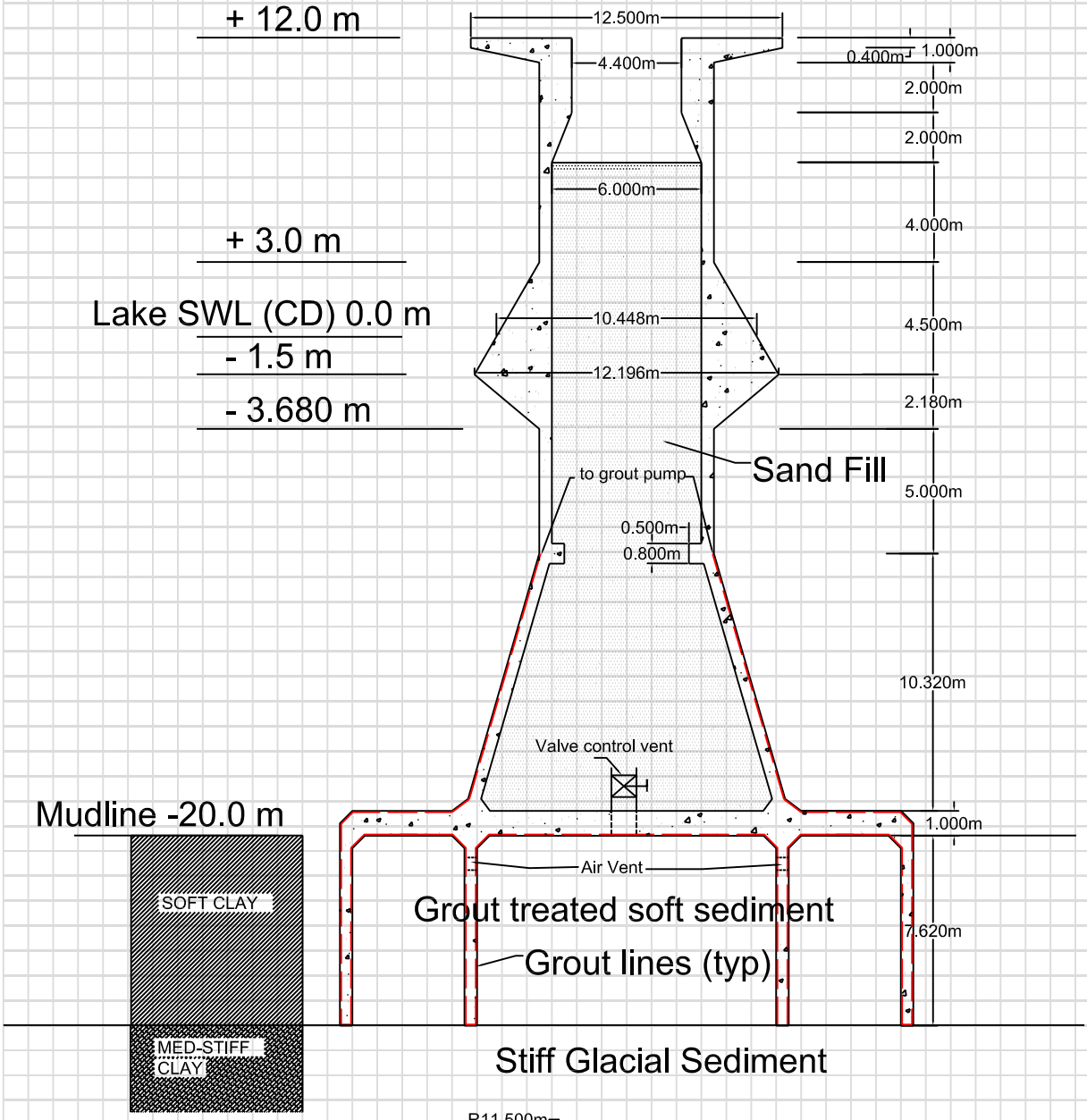
+ 12.0 m
12.500m
4.400m
0.400m
1.000m
2.000m
2.000m
6.000m
4.000m
+ 3.0 m
Lake SWL (CD) 0.0 m
10.448m
4.500m
- 1.5 m
12.196m
- 3.680 m
2.180m
Sand Fill
to grout pump
5.000m
0.500m
0.800m
10.320m
Valve control vent
Mudline -20.0 m
1.000m
Air Vent
SOFT CLAY
Grout treated soft sediment
7.620m
Grout lines (typ)
MED-STIFF CLAY
Stiff Glacial Sediment

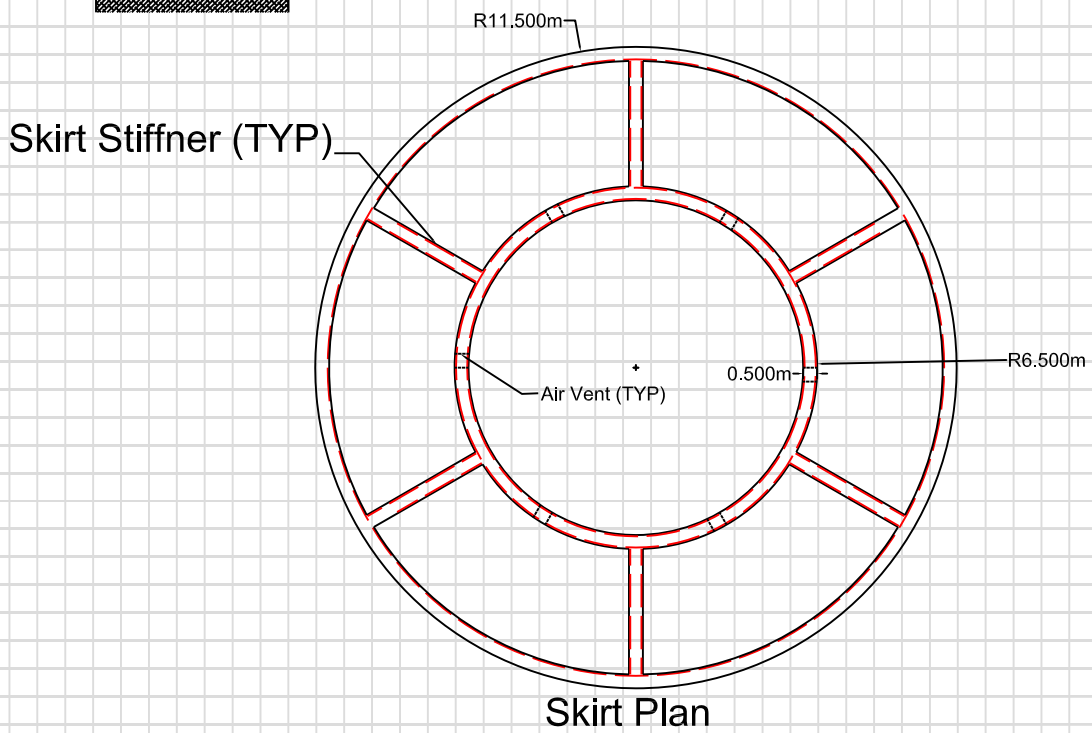
R11.500m
Skirt Stiffner (TYP)
0.500m
R6.500m
Air Vent (TYP)
Skirt Plan

APPENDIX -B

OVERVIEW OF HYDRAULIC CALCULATION

INPUT

Environmental Data

Water Depth w.r.t. project datum(m)	20
Water Level Variation above project datum (m)	2.4
Wave Height (m)	7.8
Wave Period (s)	9.2
Mean Current (m/s)	0.2
Marine Growth (m)	0.04
Average seabed slope (deg)	0.1
If wave breaking to be considered enter 1 else 0	0
If Ice cone present (enter 1 for yes, 0 for No)	1

Don't change the order, don't insert cells, Use the blank cells below the existing to add additional inputs. However matlab code needs to be changed to include additional inputs

Structural Geometry- Key Data

Interface Elevation w.r.t. project datum (m)	12
Outer diameter at interface elevation, D1 in figure (m)	12.5
Vertical length, L1 in figure (m)	0.4
Top cone angle, A1 in figure (deg)	12
Outer diameter of shaft, D2 in figure (m)	7
Ice cone top elevation (m)	3
Ice cone bottom elevation (m)	-1.5
Ice cone angle, A2 in figure (deg)	60
Below ice cone shaft length, L2 (m)	5
Outer diameter at the foundation level, D3 in figure (m)	21
Bouyancy chamber height, L3 in figure (m)	0
Bouyancy chamber length, D4 in figure (m)	4
Top platform/cone concrete thickness (m)	0.4
ice cone concrete thickness (m)	0.5
shaft concrete thickness (m)	0.5
bottom cone concrete thickness (m)	0.5
bouyancy chamber concrete thickness (m)	0.5
Bottom slab concrete thickness (m)	1
Ice cone bottom slope angle (deg)	40
ring beam at bottom cone width	1
ring beam at bottom cone height	0.8

Ice Parameters

Sheet/Level ice thickness (m)	0.5
Consolidated ice thickness (m)	0.87
Sail ice thickness (m)	0.6
Keel ice thickness (m)	11.2
flexural strength of ice (kN/m^2)	750
compressive strength of ice (kN/m^2)	2500
ice friction coefficient (0.2 for concrete, 0.1 for steel strcuture)	0.2
Unit weight of water (lake or sea) kN/m^3	9.81
Unit weight of Ice (kN/m^3)	8.82

Turbine ULS Characteristic Loads at interface elevation	
Turbine make and model relevant to this loads	NREL 5MW
Turbine hub height considered relevant to loads (m)	90
Resultant horizontal force (kN)	1863
Resultant moment (kNm)	158372
Torsional moment (kNm)	12300
Vertical Force from turbine (kN)	10500
Partial load factors (PLF)	
Environmental	1.35
Gravity	0.95
overturning moment	1.35
Material Factors	
Concrete	1.5
Steel	1.15
Friction angle of soil	1.2
Undrained shear strength	1.2
reduced gravity factor	0.95
Stability Calc Input	
depth of foundation base below mudline (m)	0
Thickness of scour protection if any (m)	0
unit weight of concrete (kN/m^3)	24.5
unit weight of ballast material in buoyancy chamber (kN/m^3)	14
unit weight of ballast material in inner cells and shaft (kN/m^3)	20
effective unit weight of scour protection/overburden material (kN/m^3)	0
effective unit weight of soil at the base of foundation (kN/m^3)	10
friction angle of soil at the base of foundation (deg)	0
cohesion of soil at the base of foundation (kPa)	80
friction angle of gravel bed at the base of foundation (deg)	0
cohesion of gravel bed at the base of foundation (kPa)	0

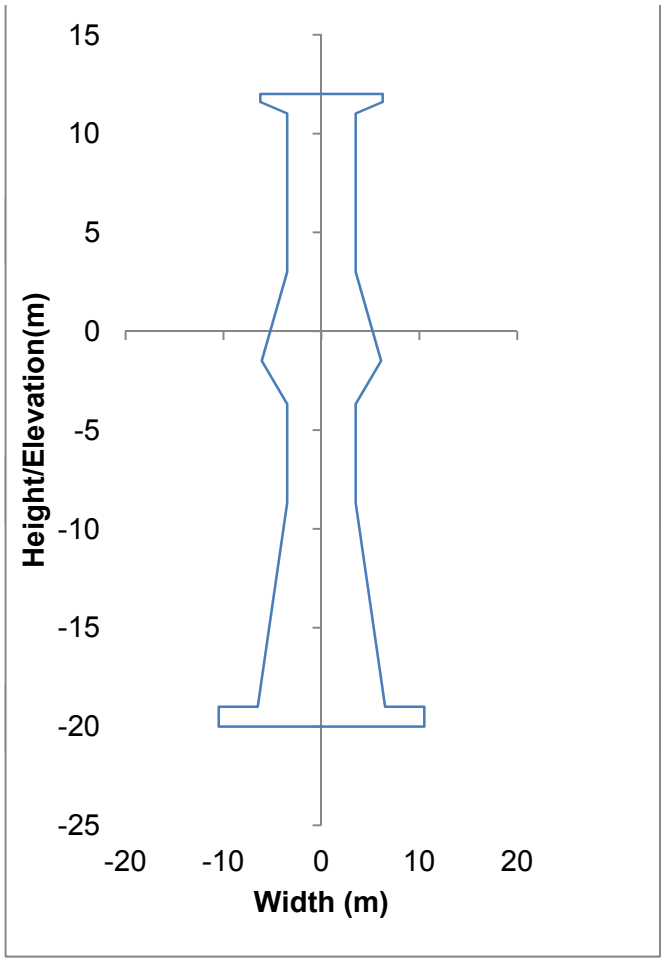
15
10
5
0
-5
-10
-15
-20
-25
Height/Elevation(m)
-20
-10
0
10
20
Width (m)

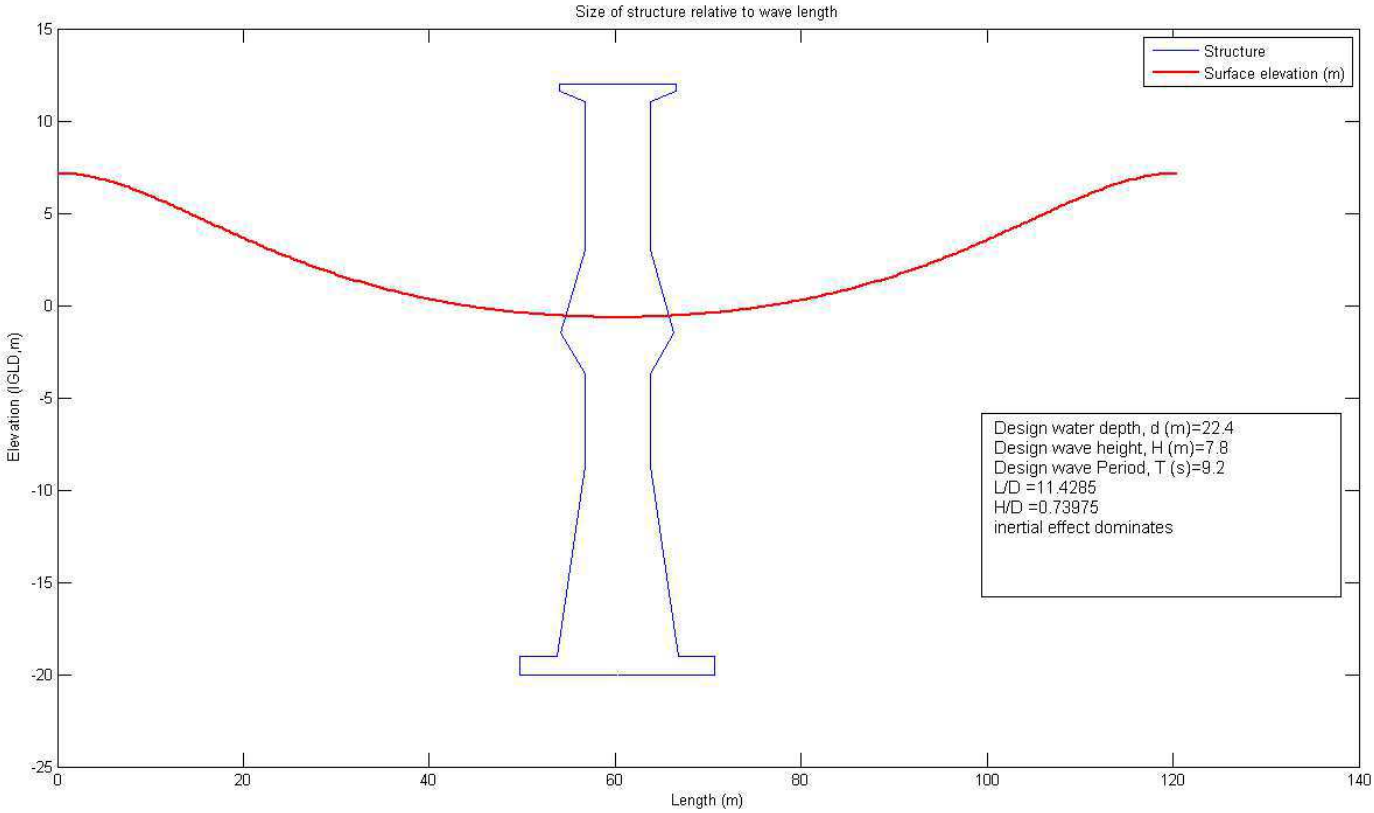
Size of structure relative to wave length
Structure
Surface elevation (m)
Design water depth, d (m)=22.4
Design wave height, H (m)=7.8
Design wave Period, T (s)=9.2
L/D =11.4285
H/D =0.73975
inertial effect dominates
Elevation (IGLD,m)
Length (m)

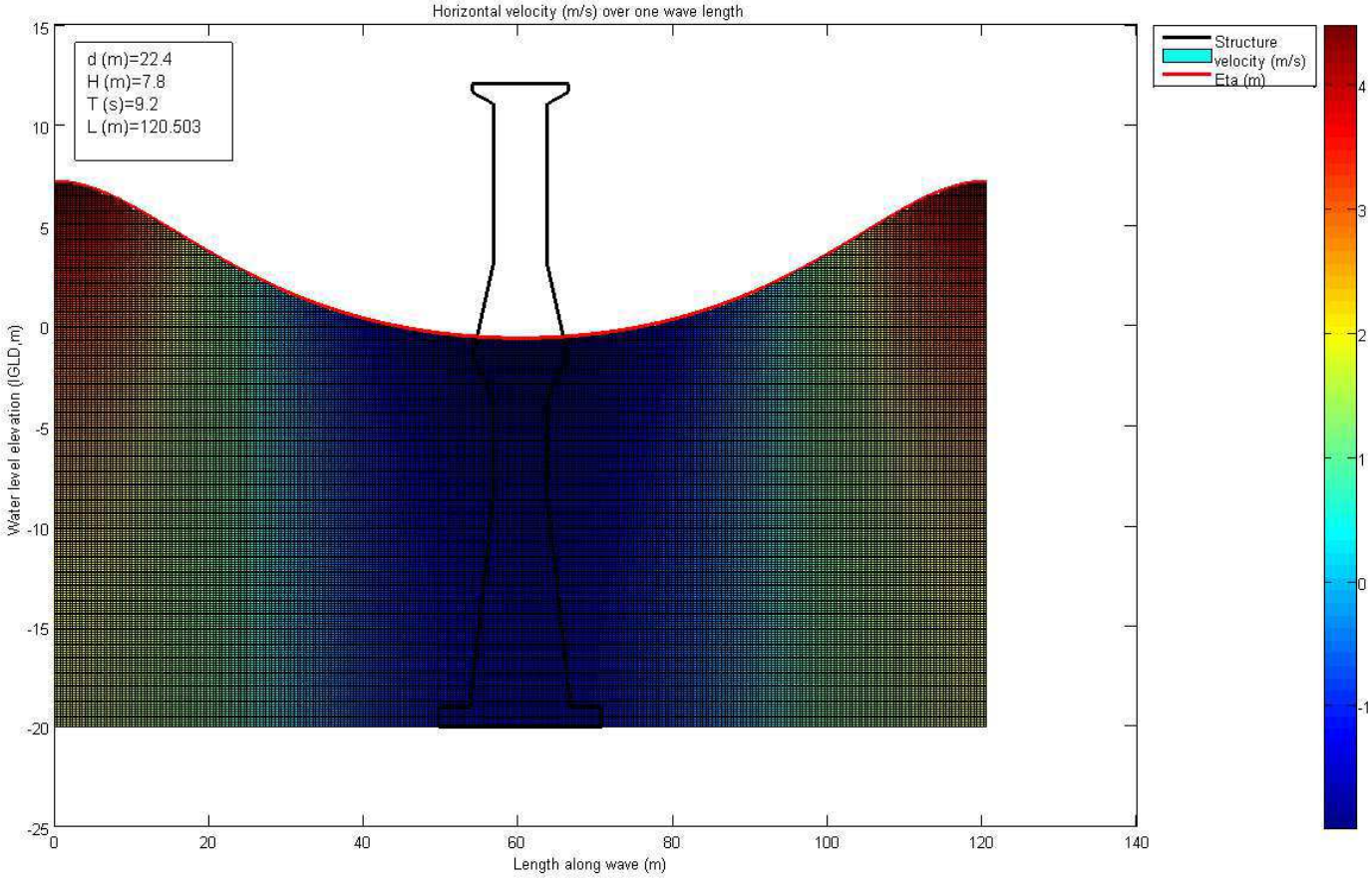
Horizontal velocity (m/s) over one wave length
d (m)=22.4
H (m)=7.8
T (s)=9.2
L (m)=120.503
Structure
velocity (m/s)
Eta (m)
Water level elevation (IGLD,m)
Length along wave (m)

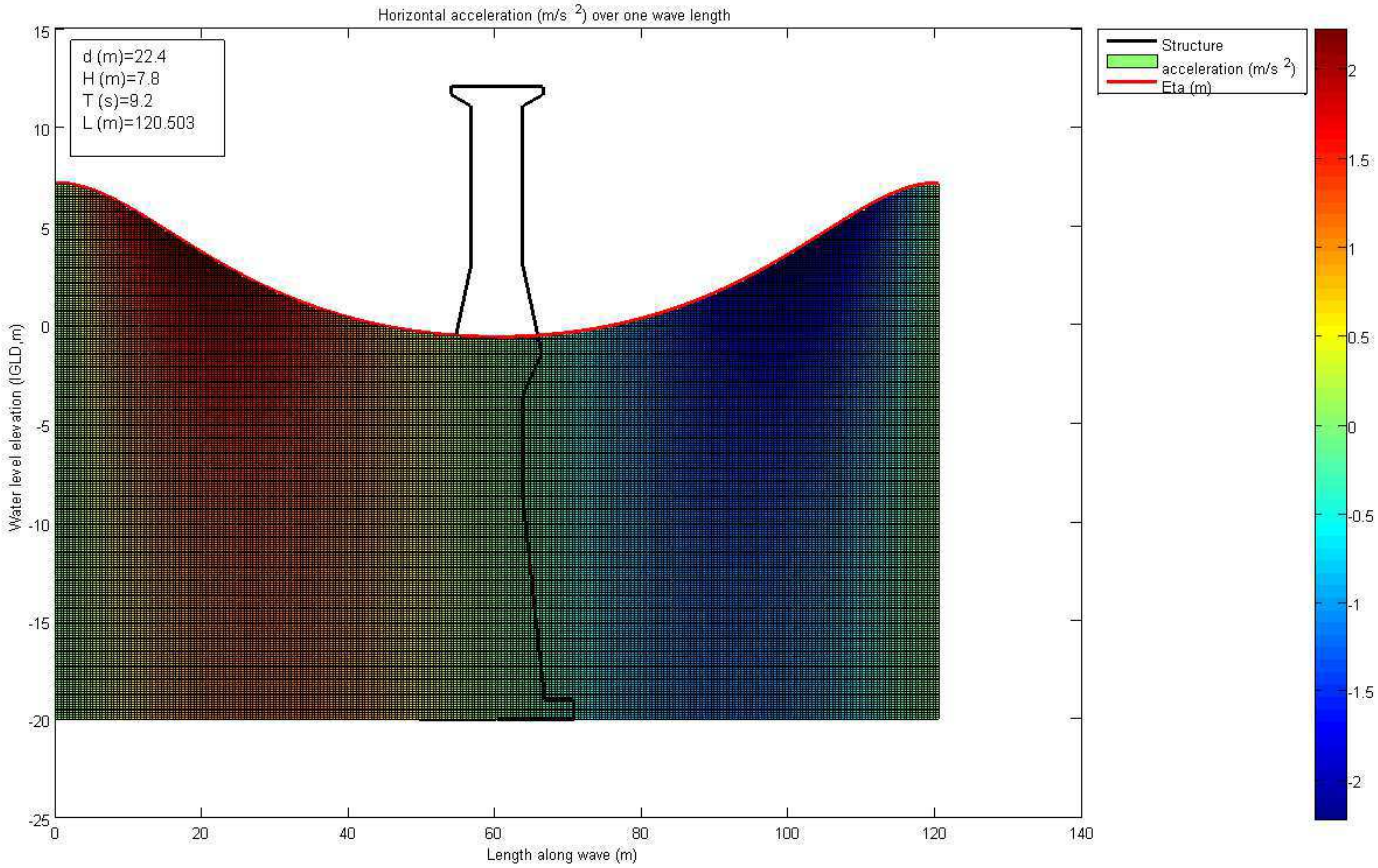
Horizontal acceleration (m/s 2) over one wave length
d (m)=22.4
H (m)=7.8
T (s)=9.2
L (m)=120.503
Structure
acceleration (m/s 2)
Eta (m)
Water level elevation (IGLD,m)
Length along wave (m)

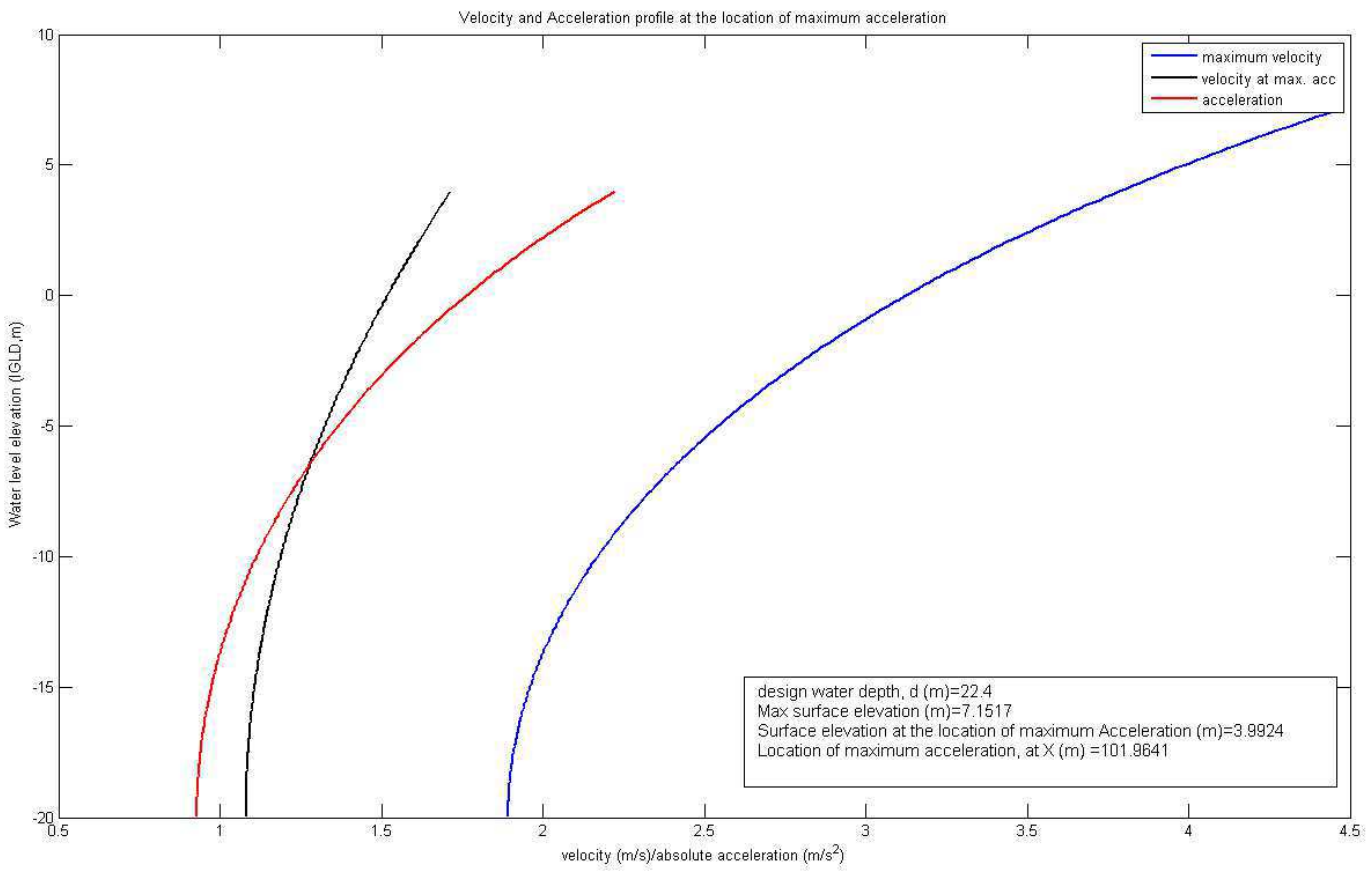
Velocity and Acceleration profile at the location of maximum acceleration
maximum velocity
velocity at max. acc
acceleration
design water depth, d (m)=22.4
Max surface elevation (m)=7.1517
Surface elevation at the location of maximum Acceleration (m)=3.9924
Location of maximum acceleration, at X (m) =101.9641
Water level elevation (IGLD,m)
velocity (m/s)/absolute acceleration (m/s2)

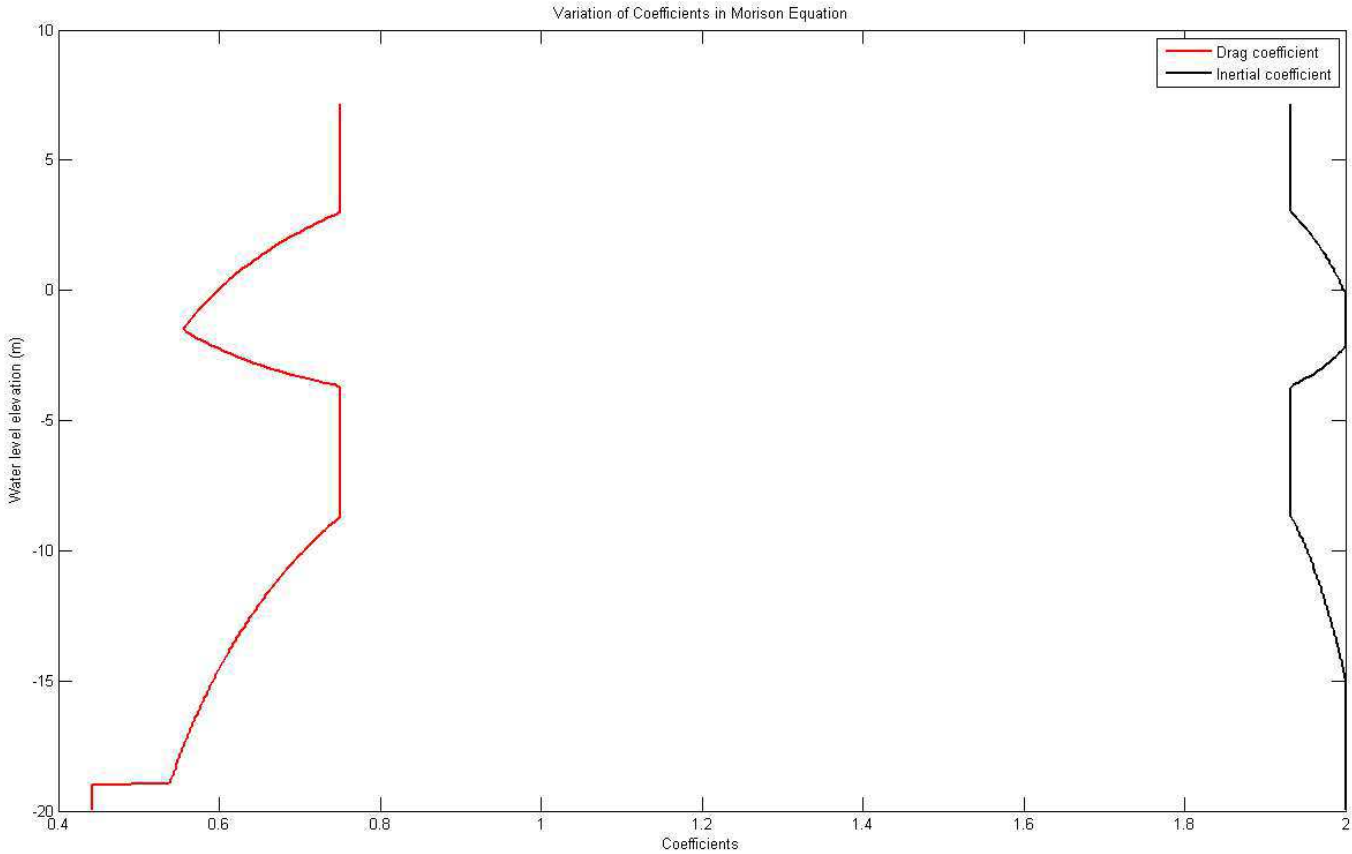
Variation of Coefficients in Morison Equation
Drag coefficient
Inertial coefficient
Water level elevation (m)
Coefficients
10
5
0
-5
-10
-15
-20
0.4
0.6
0.8
1
1.2
1.4
1.6
1.8
2

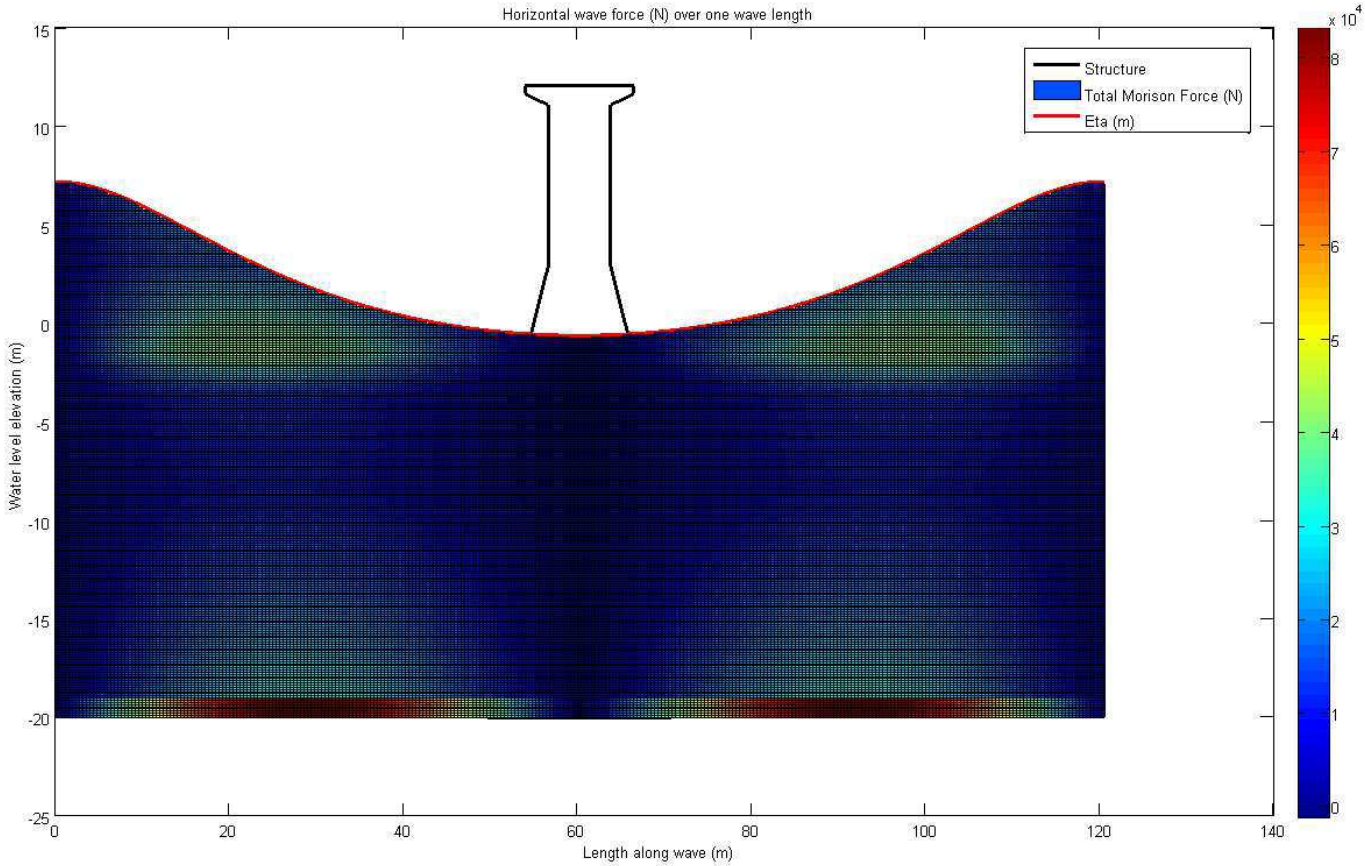
Horizontal wave force (N) over one wave length
Structure
Total Morison Force (N)
Eta (m)
Water level elevation (m)
Length along wave (m)
x 10^4
15
10
5
0
-5
-10
-15
-20
-25
0
20
40
60
80
100
120
140
8
7
6
5
4
3
2
1
0

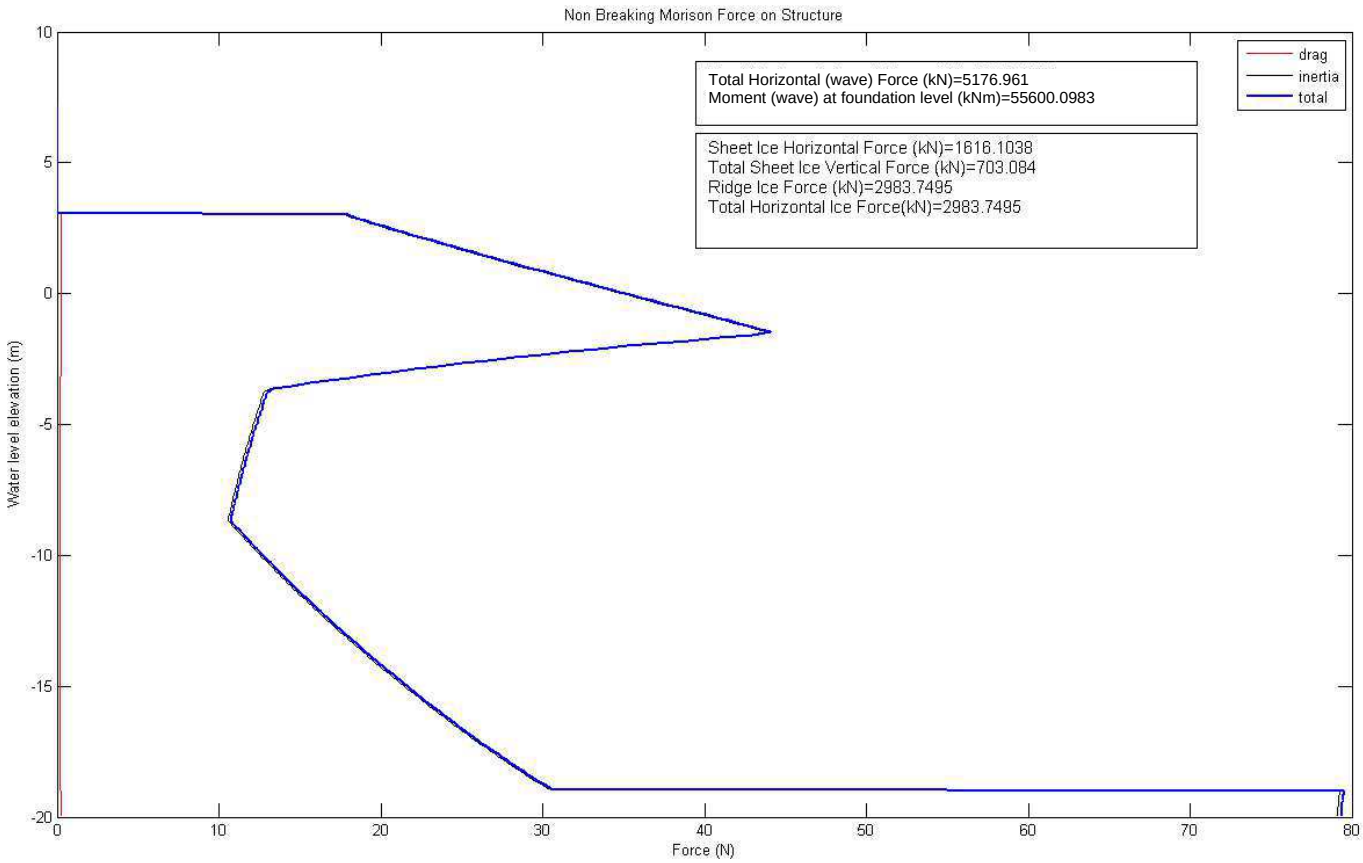
Non Breaking Morison Force on Structure
Total Horizontal (wave) Force (kN)=5176.961
Moment (wave) at foundation level (kNm)=55600.0983
Sheet Ice Horizontal Force (kN)=1616.1038
Total Sheet Ice Vertical Force (kN)=703.084
Ridge Ice Force (kN)=2983.7495
Total Horizontal Ice Force(kN)=2983.7495
drag
inertia
total
Water level elevation (m)
Force (N)
10
5
0
-5
-10
-15
-20
0
10
20
30
40
50
60
70
80

MEMO

TITLE	Fabrication Yard Summary
DATE	Original Date: May 15, 2013 Modified Date: January 29, 2014
TO	Project File
COPY	John Bazzoni, Stanley White
FROM	Brent D. Cooper
PROJECT NO	211080.0

ADDRESS Ocean & Coastal Consultants, Inc.
35 Corporate Drive
Suite 1200
Trumbull, CT 06611
USA

TEL +1 203 268 5007
FAX +1 203 268 8821
WWW ocean-coastal.com

The mass production of Gravity Base Foundations (GBF) has been proposed as an innovation to capture economies of scale associated with fabricating large numbers of foundations. To evaluate this innovation, OCC|COWI has developed a concept design for a specialized facility designed to fabricate and launch 50 GBF per season.

1 Basis and Development

1.1 Location

The proposed GBF casting yard is located at the Cleveland Cuyahoga County Port Authority's Dock 22E. The yard consists of six (6) parcels within the port, referred to as Dock 22, Dock 22S, the RTA loop, Kenmore, ESSROC and Dock 22. At the time of this design, the availability of the noted parcels has not been determined. The entire area encompasses approximately 35 acres. The yard is bordered to the East by Slip 22, to the south by the railroad tracks and to the west by the Cuyahoga River. CSX Corporation, Norfolk Southern and the Cleveland Commercial Railroad all provide service to the port. A location plan can be seen in Attachment 1, Sketch SK-01.

1.2 Description

Two options were developed for the casting yard site plan. Alternative rail layouts, options 1 and 2, can be seen in Attachment 1, Sketch SK-02 and SK-03. A full facility site plan is seen in Attachment 1, Sketch SK-12-08. In each case, the yard consists of a series of parallel fabrication assembly line rails, a transfer rail, access/launch rail, an elevator platform. Additional area is intended for use as staging and laydown areas, site offices, and parking. GBFs are fabricated in four (4) positions along each respective assembly line rail. From the assembly lines, GBFs are skidded along the transfer rail to the access/launch rail. The access/launch rail extends from the upland site over the rip rap slope to the north and to the elevator platform. The elevator platform lowers the GBFs into Cleveland harbor where they can be floated away by tug boats to the in-water staging area.

Site plan Options 1 and 2 were prepared in advance of a production rate analysis and represented a range of how fabrication facilities may appear. Description below in the "Size" discussion details why option 2 was selected for further development.

Each rail consists of a pair of parallel steel h-pile supported concrete beams. During fabrication, GBFs are constructed on a skidding platform, which is moved along the concrete rails by large hydraulic jacks along consecutive positions, allowing the GBF to be fabricated assembly line style. The rails are covered with 4" thick UHMW pads to reduce friction during skidding.

The hydraulic jacks use a series of jacking holes, as seen in Appendix 2, Sketches SK-12-03, SK-12-05 and SK-12-06 to move the skidding platform.

1.3 Size

OCC|COWI prepared a production rate analysis to determine the optimum size of the casting yard facility. The analysis was used to determine the number of concurrent positions required for simultaneous GBF fabrication, as well as the number of Controlling assumptions included:

- GBF fabrication occurs between March 21 and November 30 of each year
- GBFs are installed offshore between April 1 and September 15 of each year
- The yard must produce 50 GBF per year
- Approximate duration of fabrication is approximately 120 days
- GBF may remain partially finished over the winter standby

In order to produce 50 foundations per season within the identified constraints, it was found that the yard must be capable of fabricating 24 foundations simultaneously.

Two situations were investigated for the in-water staging area, a two season fabrication deployment window for 100 foundations and continuous operation. If the fabrication facility were to be used to produce a total of 100 foundations, it is anticipated that it would be more cost efficient to produce 50 foundations per year over two seasons with the associated demob/mob costs for standby over one winter and 50 in-water GBF staging positions in the harbor, rather than building 100 GBF over three seasons. However, if the facility were to run in continuous operation, it would be possible to take advantage of continuous fabrication and deployment cycles to reduce the number of in-water staging areas to approximately 25 positions. It should be noted that the exact number of positions will depend on the foundation fabricators detailed schedule and may be modified slightly by the fabricator's means, methods and final production schedule as well as the fabricator and installation contractor's joint tolerance for production risk.

2 Design

The design of fabrication yard components was based a model GBF 25m (82 ft) in diameter and weighing approximately 3,450 tonnes (3,800 tons). This presents a reasonable approximation for the GBF anticipated to be feasible throughout the great lakes. Should the site be selected for further development, it is recommended that a future needs analysis be developed to confirm that the size and weight assumed here will be applicable over the entire service life of the facility.

2.1 Piles

The piles supporting the concrete skidding rails were designed by URS Corporation. The scope of the pile design effort included reviewing existing historical documents, creating generalized subsurface profiles from historic geotechnical borings, and preparing a number of pile design alternatives for working loads of 68, 136 and 159 tonnes (75, 150 and 175 tons). Detailed information can be found in the "Preliminary Geotechnical Engineering Memorandum" (URS Corporation, August 10, 2012).

2.2 Pile Caps

OCC|COWI created a three dimensional model of the concrete skidding rails using the STAAD.Pro finite element analysis structural modeling software. This model was used to determine the dimensions of the skidding rails as a function of the GBF weight and pile design.

2.3 Elevator Platform

The elevator platform is an installation-specific manufactured product, designed based on client specified performance restrictions. In order to prepare the conceptual design of the GBF casting yard, OCC|COWI worked with Rolls Royce Naval Marine, Inc. (RRNMI) to determine an approximate scope and budget for a Syncrolift® system. RRNMI has deployed similar technology to facilitate ingress and egress of ships and other large, heavy vessels from the water for construction, maintenance and repair. The lifting mechanisms and control interfaces have been designed by RRNMI while the support structures and access piers have been designed by OCC|COWI. This concept design is not meant to imply a specific endorsement of the RRNMI system. Other organizations are capable of providing similar systems; however they were not contacted in developing this concept design.

2.4 Phased Buildout

The full buildout of the GBF casting yard facility calls for the fabrication of 50 GBF per year along 6 parallel assembly lines. However, if the OSW industry were to develop more gradually, it would be possible to construct a reduced number of assembly lines (minimum of one) along with the launch/access rail and elevator platform. The phased buildout would allow a reduced initial capital outlay to develop

the casting yard facility, until the OSW industry in the great lakes requires the full facility buildout and functionality of producing 50 GBF per year.

2.5 Regional Application

The GBF technology developed for the Freshwater wind project is anticipated to be widely applicable throughout the great lakes. Numerous studies have demonstrated that the cost of energy to ratepayers can be reduced by developing regional facilities, rather than developing project specific support infrastructure. OCC|COWI produced an additional memo dated October 15, 2012, updated May 15, 2013, providing additional justification for the GBF casting facility as a regional asset.

3 OPC

OCC|COWI has completed an engineer's Opinion of Probable Cost for the construction of the GBF casting yard facility. In order to complete the OPC, a number of assumptions have been made regarding the contractor's methods. These assumptions represent a level of analysis and assumption appropriate to the concept design level. This document represents the engineer's opinion as to probable means, methods, material, equipment and labor costs, crew sizes and productivity. This information has been obtained using a combination of publicly available published cost data, interviews with contractors, and actual proposals and quotations, where possible.

3.1 Mobilization/Demobilization

Mobilization of a construction project typically includes the initial delivery of personnel, equipment and some materials to the project site. If necessary, mobilization may include the initial site preparations allowing the contractor to arrive on site. It may cover temporary accommodations for workers at remote sites.

3.2 Pile Driving

The Pile Driving work item accounts for provision of and driving the steel H-piles that support the skidding rails, including the assembly line rails, transfer rails and access/launch rails. Piles specifically intended to found the elevator platform are located within that work item. It is assumed that the contractor installs piles from an upland based crew and crawler crane. Multiple independent crews may be used to decrease the project schedule.

3.3 Pile Cap

The pile cap plays the role of the actual skidding rail. It is constructed of reinforced concrete. The pile caps may be formed and poured similarly to slab on grade strip foundations. It is assumed all work is done by an upland based crew.

3.4 Elevator Platform

This work item accounts for the elevator platform, as well as the pile supported structure necessary to support the platform. The OPC accounts for a pile cost similar to the piles installed upland. The costs of the elevator platform were provided by quotation from Rolls Royce Naval Marine Inc. for their Syncrolift® system. The system was specifically designed for the GBF casting yard facility and required some non-standard modifications. Though typical marine elevator platforms are capable of lifting the weights specified for the casting yard facility, the weight of the GBF is distributed over a smaller area, necessitating greater winch capacity, tighter spacing of the winches and higher wire rope working tensile strengths.

3.5 Surface Treatment

This concept design and OPC detail a gravel surface for the casting yard. The contractor operating the GBF casting facility is likely to prefer a gravel surface that can be repaired readily by equipment on site.

3.6 Security

The GBF casting yard facility will likely be subject to U.S.C.G. Maritime Security (MARSEC). The OPC provides for the casting yard to be secured with a perimeter fence, closed circuit television cameras, facility lighting and security personnel.

3.7 Harbor Staging

In this work item, gravel pads are prepared in Cleveland Harbor to provide temporary staging positions for the GBFs after fabrication, prior to being deployed offshore. This OPC considers only the material and installation of the gravel pad. Costs associated with transportation of the GBF, including potential support from tug boats or supplemental flotation units are considered in other OPCs prepared as part of the project.

This OPC conservatively provides for 50 in-water staging positions, intended for the installation of 100 GBF over two seasons. If the GBF casting yard facility is operated continuously, it may be possible to reduce the number of in-water staging positions, as discussed above.

3.8 Markups

Markups above the work item subtotals in various percentages are applied to construction costs as described below.

3.8.1 General Conditions

A General Conditions markup of 5% is applied the work item subtotals. This is the value OCC|COWI typically applies to most OPCs.

3.8.2 Overhead

An Overhead markup of 10% is applied cumulatively to the work item subtotals and general conditions. This is the value OCC|COWI typically applies to most OPCs.

3.8.3 Profit

A Profit markup of 5% is applied cumulatively to the work item subtotals, general conditions and overhead. This is the value OCC|COWI typically applies to most OPCs.

3.8.4 Sales Tax

The markup for sales tax is applied cumulatively to the work item subtotals, general conditions, overhead and profit.

As of the preparation of this OPC, sales tax in Cleveland is 7.750%[1].

3.8.5 Inflation

Costs compiled for this OPC were observed in 2011 dollars and inflated to 2012 dollars using the USACE Civil Works Construction Cost Index System (CWCCIS) Engineering Manual (EM) 1110-2-1304 dated 31 March, 2012. The Ports and Harbors feature code was selected as the most representative code to estimate inflation and has been calculated at 1.94%.

---

[1] http://www.sale-tax.com/ClevelandOH

MEMO

TITLE	Semi Floating GBF Evaluation Summary
DATE	Original Date: May 14, 2013 Modified Date: January 29, 2013
TO	Project File
COPY	Joseph Marrone, Stanley White, Brent D. Cooper
FROM	Ravi Sharma, Brian Rhett
PROJECT NO	211080.0

ADDRESS Ocean and Coastal Consultants, Inc.
35 Corporate Drive
Suite 1200
Trumbull, CT 06611
USA

TEL +1 203 268 5007
FAX +1 203 268 8821
WWW ocean-coastal.com

1 Introduction

The "Shallow Water Offshore Wind Optimization for the Great Lakes" project is a study of a holistic offshore wind system aimed at optimizing the wind system to achieve at least 25% reduction in cost of energy (COE) for a large scale offshore wind project. Freshwater Wind I, LLC is leading this project along with a team from National Renewable Energy Laboratory (NREL) and OCC|COWI. The project is being funded by Department of Energy (DOE).

Among several focus areas for COE reduction, foundation design and installation methods provide a significant scope for total cost reduction. For this purpose, different foundation concepts are being evaluated.

This report summarizes the concept design work and feasibility assessment for a semi-floating gravity base foundation (GBF). GBFs have been used for European offshore wind foundations. However, given the construction equipment limitations on the Great Lakes and due to the lack of a US-based offshore wind supply chain, a semi-floating GBF provides an opportunity for COE reductions by allowing for installation with locally available equipment (see OCC|COWI Supplemental Flotation Summary Memorandum dated May 15, 2013 for an additional description of the installation process).

This document has been updated and as currently shown as Version 2.0; it has been updated to reflect the additional engineering completed since initial publication on May 14, 2013. The semi-floating GBF design has been updated to account for the subsurface conditions observed during the Preliminary Subsurface Exploration program completed by project partner LEEDCo in June 2013. As seen below in Section 6.3, updates to the design geotechnical profile and advances in modeling software result in an approximately $1,700,000 savings per foundation.

This savings is not reflected in overall LCOE calculations. This savings is due primarily to the incorporation of better information, rather than "innovation" as defined

by U.S. DOE. The LCOE calculations utilize the initial, higher OPC value in order to remain conservative due to the uncertainty of the lake bed throughout the entire Great Lakes Region.

2 Design Basis

The design is based on a typical seabed elevation and NREL's 5.0 MW wind turbine. The chosen study/project area is approximately 11km (7 miles) off of Cleveland, OH in Lake Erie in the Great Lakes. The average water depth in the study area is 20m (66 ft).

2.1 Codes and Standards

The current concept evaluation is based on DNV Standard DNV-OS-J101.

2.2 Vertical Datum

Because water levels in lakes are subject to seasonal variation, water depths are generally referred to mean low water levels, commonly called the Chart Datum (CD). In non-tidal waters, as in the case of Great Lakes including Lake Erie, water levels and chart datum are often assigned an elevation based on a standard vertical reference system. In order to unify the datum for all of the water bodies encompassing the Great Lakes - St. Lawrence River system, a common datum, the International Great Lakes Datum (IGLD) was introduced by Canadian and US authorities in 1955. This datum has been adjusted regularly to account for the earth's crustal movement and the current adjusted datum in practice is IGLD (1985).

The vertical datum for the proposed wind farm shall be International Great Lakes Datum (IGLD, 1985). As per US Army Corps of Engineers (USACE) guidance, the mean low water datum (Chart Datum, CD) for Lake Erie is 173.5m IGLD. The water depths reported in this document are referenced to the Chart Datum of Lake Erie.

2.3 Hydrographic Design Parameters

Table 2-1 summarizes the water level and wave parameters from Marschall et al., 2008 utilized in the GBF design.

Table 2-1 Overview of Hydrographical Data

Parameter	Symbol	USC units	SI units
Seabed level (chart datum)	Z_{seabed}	-65.6 ft	-20 m
50 year water level variation (surge)		+ 7.9 ft	+ 2.4 m
Design still water level	Z_{SWL}	+ 7.9 ft	+2.4 m
Water depth	h	73.5 ft	22.4 m
Maximum wave height- 50 year	H_{max}	25.6 ft	7.8 m
Period of max. wave	T_{Hmax}	9.2 sec	9.2 sec
Co-directional current (Verber, 1953)	U_c	0.66 ft/s	0.2 m/s

The maximum wave height is not limited by water depth; wave breaking effects are not considered in this study.

2.4 Concept Design Approach

Only the Ultimate Limit State (ULS) load case has been considered in this study based on the assumption that foundation dimension/weight will be governed by ULS load conditions. However, it should be noted that Fatigue Limit States (FLS) and Serviceability Limit States (SLS) considerations will be equally important for detailed design. Transport and installation loads were not considered in this concept design. The following loads are considered or calculated for this study.

2.5 Interface Loads

The gravity base foundation is designed for loads from NREL 5.0 MW wind turbine. The main dimensions and preliminary design interface loads are given in Table 2-2 (NREL, 2007).

Table 2-2: ULS Design Wind Turbine Loads (including load factors) at Interface Level Between Tower and Foundation

Parameter	SI Units	NREL 5.0 MW WTG
Horizontal load	MN	1.9
Overturning moment	MNm	158.4
Torsion in shaft	MNm	12.3
Weight of turbine + tower	MN	10.5

2.6 Turbine Geometry

The NREL turbine specification indicates the design hub height is equal to 90m and the tower length is 87.6m (287 ft). The loads provided are with respect to the base of the tower (NREL, 2007). The interface elevation of the foundation and tower was determined to be +12.0m (+39 ft) as discussed below. OCC|COWI converted the loads provided by NREL in Table 2-2 for the Freshwater interface elevation.

Table 2-3: Main Turbine Dimensions

Parameter	SI Units	NREL 5.0 MW WTG
Hub height level	m CD	+ 90
Service platform level / Interface Elevation	m CD	+ 12.0
Tower bottom diameter	m	6.0

2.7 Waves and Current Loads

The wave and current forces acting on the gravity base foundation have been calculated by OCC|COWI based on the wave data provided in Table 2-1.

The wave and current loads are calculated in accordance with DNV-OS-J101. The structure was assumed to have a rough surface due to marine growth. 40mm (1.6 in.) of marine growth was assumed to exist over the full height of the structure from the mudline to the low water elevation.

Hydrodynamic loads were calculated using stream function wave theory for determination of wave kinematics.

The effect of wave breaking is not considered in the wave force estimation as the maximum wave height is less than the depth limited wave height (approximately 0.78 times water depth).

Based on site conditions, the interface elevation is assumed at +12.0m (+39 ft) above CD to avoid wave slamming forces on the service platform. The interface elevation is determined based on design still water level plus wave crest height plus free board, conservatively.

No wave and current forces are assumed to act on the gravity base foundation below the lakebed level.

Table 2-4 shows the main parameters and the characteristic (i.e. load factor = 1.0) horizontal forces and overturning moment caused by wave and current.

Table 2-4 Characteristic ULS Wave and Current Loads Acting on the Gravity Base Foundation

Parameter	SI Units	Value
Lakebed level	m CD	-20.0
Foundation level	m CD	-27.6
Characteristic horizontal force at foundation level	MN	4.0
Characteristic overturning moment at foundation level	MNm	83.0

2.8 Ice Loads

Lake Erie is subject to the formation of freshwater lake ice and ridges during the winter months. Though the lake ice coverage is not observed every year, it occurs frequently enough to warrant ice load consideration in the design.

Based on the ice conditions study conducted by Marschall et al., 2008, the expected maximum level ice sheet thickness at the project area is 0.5m (1.6 ft).

Ice sheet movements induced by wind or current can result in ridging or rafting. Ice ridges are composed of a consolidated middle layer enclosed by unconsolidated rubble ice layers both at the top (sail) and the bottom (keel). In Lake Erie, the ice coverage does not exist throughout the year and hence, the ice ridges that are formed may be classified as new first year ridges. The forces due to the new first year ice ridges may be less than the consolidated first year ridges.

According to Marschall et al., 2008, the maximum thickness of rafted ice (sail thickness) is 0.6m (2 ft). According to C-Core, 2008, consolidated layer and keel thickness for ice ridge is 0.87m (2.9 ft) and 11.2m (36.7 ft), respectively.

The function of an ice cone is to deflect the sheet (level) ice up or down in order to bend and eventually break it, rather than to have it push directly into the foundation. Since ice is weaker in bending than crushing, an ice cone reduces the sheet ice load on the foundation. The GBF is designed with a combination ice cones which incorporates both upward and downward breaking surfaces. The ice cone is incorporated into the GBF and extends above and below the design water level. For the Freshwater GBF, the ice cone extends from +3.0m (+10 ft) CD and -4.0m (-13 ft) CD. These elevations were selected considering the expected water level variation of +/- 2.4m (+/-7.9 ft) and ice thickness. The angle for normal cone (upward slope) was determined to be 60 degrees and for the inverted cone (downward slope) the angle is fixed at 40 degrees. This geometry is optimized to keep the expected ice load less than the wave load so that ice load does not govern the design.

The force due to level ice is estimated by following the standard procedure outlined in DNV for conical structures.

The force due to ice ridges on sloping structures was calculated using an empirical method suggested by Brown and Seify, 2005. This method uses several empirical constants that were calibrated using the measured data from the Confederation Bridge (Prince Edward Island, Canada). This method has not been recommended by any codes. However, it is generally recognized that the ridge ice force estimation method recommended in Canadian Standards Association (CSA) is significantly higher than measured forces (Brown and Seify, 2005). For the purposes of this study, the method proposed by Brown and Seify is assumed to be appropriate.

Table 2-5 summarizes the freshwater ice properties and estimated loads on the gravity base foundation.

Table 2-5 Freshwater Ice Properties and Characteristic Ice Loads on the Gravity Base Foundation

Property	Value	Source
Density (kg/cu.m)	900	DNV-OS- J101, 2011
Ice-concrete dynamic frictional coefficient	0.2	DNV-OS- J101, 2011
Compressive strength (MPa)	2.5	Marschall et al., 2008
Flexural Strength (MPa)	0.75	Marschall et al., 2008
Level ice thickness (m)	0.5	Marschall et al., 2008
Consolidated ice layer thickness (m)	0.87	C-Core, 2008
Sail thickness (m)	0.6	Marschall et al., 2008
Keel thickness (m)	11.2	C-Core, 2008
Horizontal ice force (MN)	1.6	DNV-OS- J101, 2011
Vertical ice force (MN)	0.7	DNV-OS- J101, 2011
Horizontal ridge ice force (MN)	3.0	Brown and Seify, 2005

This design assumes that fast ice will not form on the structures; it is possible that fast ice may form on the structures, thus increasing the effective cross sectional area and surface roughness. This in turn will increase the wind and hydrodynamic loads on the structures (including turbine and tower). The possibility for increasing these loads shall be considered in the detailed design.

It is noted that the calculated horizontal ridge ice force on the gravity base structure is less than the horizontal force due to wave and current loads. Therefore, the design is governed by wave and current loads.

2.9 Combined Loads

Using the above loads the combined wind, wave and current design loads at foundation level have been calculated and presented in Table 2-6. The design loads are inclusive of a load factor of 1.35 on moments and horizontal loads, and a load factor of 1.0 on vertical loads.

Table 2-6 Combined ULS Wind, Wave and Current Design Loads at Foundation Level

Parameter	Value (SI)	Value (US Customary)
Lakebed level	-20.0m CD	-66 ft CD
Foundation level	-27.6m CD	-90 ft CD
Horizontal design load	7.3 MN	1640 kips
Overturning design moment	345.7 MNm	254,900 ft-kips
Design torsion	12.3 MNm	9,070 ft-kips
Vertical interface load	10.5 MN	2360 kips

3 Geotechnical Evaluation

3.1 Soil Conditions

The seabed level at the proposed wind farm site is approximately -20.0m (-66 ft) CD. During the initial design, site-specific geotechnical data was not available. A geotechnical investigation campaign was conducted in 1973, off of Cleveland, OH, in Lake Erie, in connection with the Airport Feasibility Study. The soil characteristics observed during the 1973 study were assumed to be representative of the wind farm site for this Project. This investigation included seismic surveys followed by five (5) marine borings up to 100 feet below lakebed, 27 vibracore samples and laboratory testing. The laboratory testing program included moisture content, grain size distribution, Atterberg limit tests, unconfined compressive strength, triaxial compression and vane shear tests.

The report of the study (Dames and Moore, 1974) provides some insight of the sediment properties in Lake Erie. However, some amount of uncertainty in the soil conditions within the proposed wind farm site is expected.

For the gravity base foundation concept design, a generalized soil profile and engineering properties were selected based on the available 1973 boring log data. Specifically, boring 2, located at the center of the airport investigation area, was utilized for this study. It should be noted that the chosen soil profile and engineering properties may not be representative of the proposed wind farm site and there may be significant variation in soil strength parameters. A detailed geotechnical study will be required in the future for preliminary and detailed foundation design.

Based on Boring 2, the upper 7.6m (25 ft) of the lakebed sediment consists of soft, gray silty clay having very low dry density, high moisture content and very low shear strength. Beneath this layer is stiff-very stiff silty clay with trace gravel (glacial till) extending to a depth greater than 27m (89 ft). The unconfined compressive strength for this layer was determined to be 3400 psf (163 kPa).

The interpreted soil profile and parameters used in this study is presented in Table 3-1.

Table 3-1 Overview of Soil Layers and Parameters

Layer	Top of layer below mudline, m (ft)	Bottom of layer below mudline, m (ft)	Layer thickness, m (ft)	Description	Unit Weight, kN/m^3, (pcf)	Effective friction angle, deg	Undrained shear strength, kPa (psf)
1	0.0	7.6 (25)	7.6 (25)	Soft clay	16.8 (107)	-	S_u=150+10(z) in psf where z is in feet S_u=7.18+1.57(z) in kPa Where z is in meters
2	7.62 (25)	27.4 (90)	19.8 (65)	Stiff clay	20 (127)	-	81.4 (1700)

The undrained shear strength of approximately the upper one (1) meter of sediment is very low, on the order of 5 kPa (100 psf) due to high water content of the lakebed sediment. However, the strength at the subsequent depth is assumed to follow the increasing trend as per the equation shown.

3.1.1 Preliminary Subsurface Exploration Program

In June 2013, Freshwater's project partner LEEDCo completed a Preliminary Subsurface Exploration of the Project Icebreaker Site. Information from this exploration program was used to verify the GBF design, as detailed further in section 3.2.1, below.

Although the hypothetical Freshwater and the LEEDCo demonstration project site are approximately 95km (58mi) apart, it is anticipated that the geotechnical characteristics at the two (2) sites will be similar.

One (1) borehole (BH-1) and three (3) cone penetration tests (CPT-1, CPT-2 and CPT-3A) were performed in the vicinity of LEEDCo's Project Icebreaker. Work was

completed from a jack-up barge. The borehole was drilled with a truck-mounted drill rig using sonic drilling and Shelby tube sampling in overburden soils and NQ core barrels in the underlying bedrock. Representative undisturbed samples of the soft to stiff overburden soils were obtained using a 3-inch diameter thin walled tube. Recovered samples were lab tested by Conestoga-Rovers and Associates, Inc.. Methane pockets were reportedly encountered during the investigation.

The design soil profile and properties interpreted from the exploration and associated lab testing are presented in Table 3-2 and Table 3-3. The profile observed in Borehole BH-1was selected as the representative stratigraphy for the project site, with data from CPT-1 and CPT-3A filling in the gaps. The estimated undrained shear strength profile is plotted in Table 3-4.

Table 3-2: Design Soil Profile and Properties (U.S. Customary Units)

Layer		Depth [ft]	Elevation [ft]	γ [pcf]	s_u [psf]	s_{ur} [psf]	φ' [°]	k [pci]	J	ε_c
Recent Sediments	Top	0	511	105	0	0	-	-	0.5	0.020
	Bottom	10	501		200					0.020
Recent Sediments	Top	10	501	125	-	-	33	65	-	-
	Bottom	20	491							
Lacustrine Clay	Top	20	491	115	1500	750	-	-	0.5	0.007
	Bottom	31	480		800	150				0.010
Lacustrine Clay	Top	31	480	115	800	150	-	-	0.5	0.010
	Bottom	53	458							
Glacial Till	Top	53	458	130	1150	250	-	-	0.5	0.007
	Bottom	64	447		2400	1400				0.005
Glacial Till	Top	64	447	130	2400	1400	-	-	0.5	0.005
	Bottom	88	423		3500	2050				0.005

Notes:

- γ - saturated unit weight

- s_u - undrained shear strength in triaxial compression

- φ' - effective friction angle

- k - rate of increase with depth of the initial modulus of subgrade reaction

- J - dimensionless empirical constant

- ε_c - strain at one-half the maximum deviator stress in laboratory undrained compression tests of undisturbed soil samples

Table 3-3: Design Soil Profile and Properties (S.I. Units).

Layer		Depth [m]	Elevation [m]	γ [kN/m³]	s_u [kPa]	s_{ur} [kPa]	φ' [°]	k [kPa/m]	J	ε_c
Recent Sediments	Top	0	155.8	16.5	0	0	-	-	0.5	0.020
	Bottom	3.0	152.7		4.2					0.020
Recent Sediments	Top	3.0	152.7	19.7	-	-	33	17600	-	-
	Bottom	6.1	149.7							
Lacustrine Clay	Top	6.1	149.7	18.1	31.3	15.7	-	-	0.5	0.007
	Bottom	9.4	146.3		16.7	3.1				0.010
Lacustrine Clay	Top	9.4	146.3	18.1	16.7		-	-	0.5	0.010
	Bottom	16.2	139.6							
Glacial Till	Top	16.2	139.6	20.4	24.0		-	-	0.5	0.007
	Bottom	19.5	136.2		50.1					0.005
Glacial Till	Top	19.5	136.2	20.4	50.1		-	-	0.5	0.005
	Bottom	26.8	128.9		73.1					0.005

Notes:
Refer to Table 3-2.

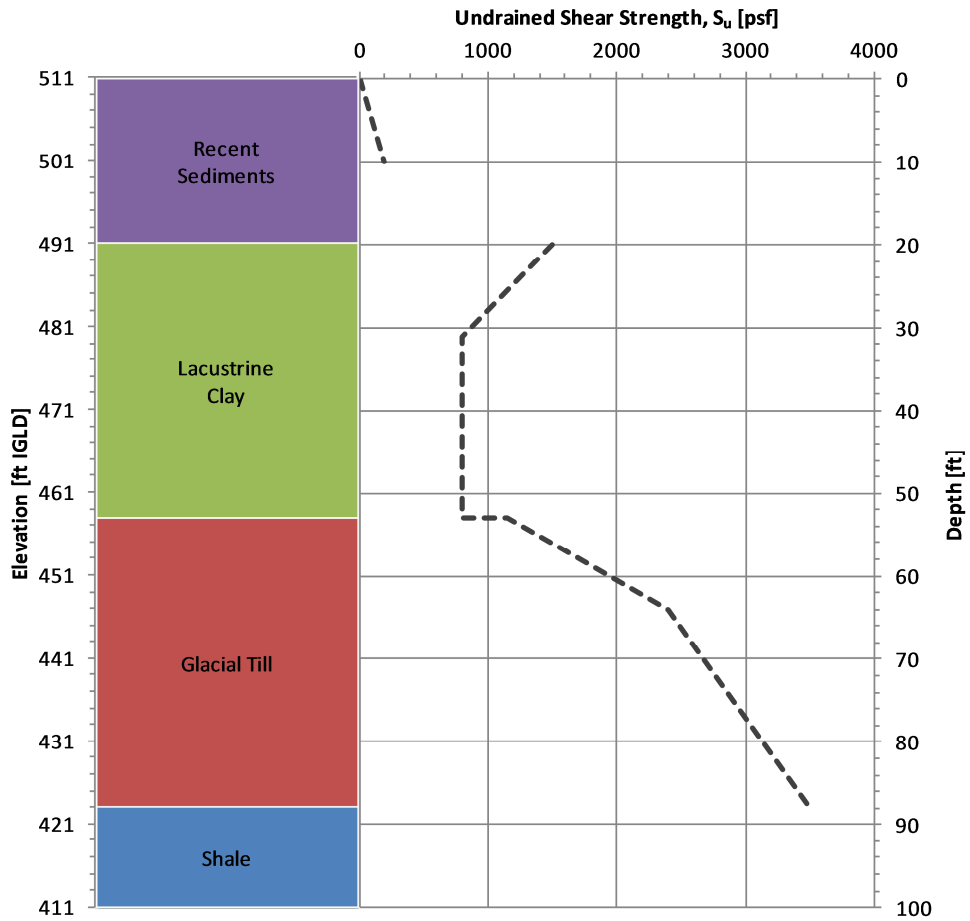

Table 3-4: Design Undrained Shear Strength Profile.

Descriptions of the stratigraphic layers are summarized in order starting from the lake bed downward in the following paragraphs.

Recent Sediments

The top layer of about 3m (10 ft) in borehole BH-1, characterized as "sandy mud" and "muddy sand" in generalized geologic references and studies, is described as gray, very soft to soft silty clays with low unit weight, high moisture content, very low shear strength and high compressibility. The shear strength of sampled surficial sediments is effectively zero.

The bottom layer is dense sand with seams of silty clay. The sand is generally fine grained, with some layers of medium to coarse grained sand containing gravel.

Lacustrine Clay
These glacio-lacustrine deposits can be described in the project area as gray clayey silts and silty clays (medium stiff to stiff) which possess moderate compressibility. The top 3m to 4.6m (10ft to 15ft) exhibit overconsolidation; the degree of overconsolidation decreases with depth.

Glacial Till
Glacial till in the project area can be described as gray stiff silty clay which becomes very stiff at great depth. Gravel content varies but is expected to be low. It possesses high shear strength and moderate compressibility, and is preconsolidated. CPT-1 and CPT-3A results exhibit a 3m to 4.6m (10ft to 15ft) transition zone from lacustrine clay to glacial till.

Glacial Outwash
Because these sand and gravel deposits tend to exist only in pockets and localized areas and are limited in extent, they were not considered in developing the soil profile for concept design. A thin 1.2m (4ft) layer was encountered at CPT-3A approximately 6m (20ft) below mudline.

Shale Bedrock
Shale bedrock underlies the glacial till layer. The upper part of the Ohio Formation, the Cleveland Shale and Chagrin Shale, is the only bedrock strata likely to be encountered. Properties of the shale bedrock encountered at borehole BH-1 are presented in Table 3-5.

Drilling and coring at BH-1 went through 9.8m (32ft) of bedrock. The cores recovered have an average saturated unit weight of 24.4 kN/m³ (155 pcf) and an average unconfined compressive strength of 64.1 MPa (9300 psi) of intact cores. The first 3m (10 ft) was highly broken down because of the drilling process. The rest of the core show fresh to slightly weathered shale with a few interbedded limestone layers. The Rock Quality Designation (RQD) of the cores varies from 5 to 69%.

Table 3-5: Shale Bedrock Properties (U.S. Customary and S.I. Units).

Layer		Depth [ft]	Depth [m]	Elevation [ft]	Elevation [m]	γ [pcf]	γ [kN/m^3]	q_u [psi]	q_u [MPa]	RQD [%]
Shale	Top	88	26.8	423	128.9	155	24.4	9300	64.1	-
	Bottom	98	29.9	413	125.9					
Shale	Top	98	29.9	413	125.9					57
	Bottom	100	30.5	411	125.3					
Shale	Top	100	30.5	401	122.2					5
	Bottom	110	33.5	401	122.2					
Shale	Top	110	33.5	401	122.2					69
	Bottom	120	36.6	391	119.2					

Notes:

- γ - saturated unit weight of intact rock

- q_u - unconfined compressive strength of intact rock

- RQD - Rock Quality Designation

3.2 Bearing and Sliding Capacity Calculations

Bearing and sliding capacities of the gravity base foundation have been calculated as per DNV using the combined loads described above.

Because of relatively low bearing capacity of the upper 7.62m (25ft) of soft clay, it is assumed that the GBF will be installed on top of the stiff clay layer after removing (dredging) the top soft clay layer. Foundation bed preparation with gravel fill will be required to ensure a level surface. Therefore, the bearing and sliding capacities are calculated assuming that the foundation is founded on the stiff clay layer at a depth of 7.6m (25ft) below mudline. The unit weight and characteristic undrained shear strength assigned to the stiff clay layer are 20 kN/m^3 and 80 kPa (127 pcf and 1.67 ksf), respectively.

The design soil strength is reduced by a material factor of 1.25 on undrained shear strength. The calculated main concrete dimensions are listed in Table3-6.

It is assumed that the foundation is ballasted with sand having unit weight of 20 kN/m^3 (127 pcf) and 14 kN/m^3 (89 pcf) within the shaft portion and buoyancy chamber respectively. A reduced unit weight of the ballast material within the buoyancy chamber is assumed to account for the difficulty in ensuring full ballasting.

Further, it is assumed that sand will be ballasted hydraulically using a dredge pump to a certain height inside the shaft/buoyancy chambers. After allowing time for settlement, dry sand will be filled up to 5m (16ft) below the top of GBF. For filling

inside the buoyancy chambers, some openings shall be provided inside the foundation for the sand-water mixture to flow to the buoyancy chamber and for air to escape.

Table3-6 Main Concrete Dimensions and Volumes

Parameter	Value (SI)	Value (US Customary)
Diameter of base slab	26.0 m	85.3 ft
Volume of concrete	1834 m^3	2,400 yd^3
Top of fill level	+ 7.0 m CD	23 ft
Ballast volume (sand)	3258 m^3	4,260 yd^3

A drawing with primary dimensions of the gravity base foundation is attached to this memo.

As there is significant uncertainty regarding the undrained shear strength of the clay layer, a sensitivity analysis was performed by varying the strength from 60 kPa to 120 kPa (1.25 ksf to 2.51 ksf). It was determined that the impact of reduced undrained shear strength in the clay is not critical to the foundation design.

The effect of consolidation settlement of the clay layer on the GBF was not evaluated.

3.2.1 Updated GBF Bearing and Sliding Capacity Calculations

Similar to the initial design, geotechnical capacity (bearing, sliding, overturning) of the updated GBF was calculated according to DNV. For this second iteration, OCC|COWI used proprietary MSExcel based preliminary GBF design software to analyze the stability calculations of alternative buoyancy chamber diameters and heights.

The first step was to calibrate the software model for initial met-ocean conditions, geotechnical conditions, turbine loads and structure geometry and confirm the model was operating properly as compared to the initial design. Next, the updated soil parameters were entered; met-ocean conditions and turbine loadings remained constant. In each case, the structure geometry above the taper section was held constant except for the overall height of the stem.

Once the geometry of each alternative buoyancy chamber size was entered, the model calculates factors of safety and checks for DNV code compliance. OCC|COWI evaluated the cases shown below in Table 3-7. For each number, Case “A” considers the 50 year high water elevation and Case “B” considers water level at Chart Datum. Note that Case 1 is the original geometry for the updated soil parameters.

Table 3-7: Updated GBF Design Cases

Design Cases	Parameters				DNV Code Compliance
	Chamber diameter	Chamber height	Water depth	Foundation Level	
Case 1A (50 yr- WL +2.4m CD)	26.0	6.0	22.4	-27.6	Fail
Case 1B (+0.0m CD)	26.0	6.0	20.0	-27.6	Fail
Case 2A (50 yr- WL +2.4m CD)	29.0	5.5	22.4	-27.6	OK
Case 2B (+0.0m CD)	29.0	5.5	20.0	-27.6	OK
Case 3A (50 yr- WL +2.4m CD)	29.0	5.5	22.4	-23.0	OK
Case 3B (+0.0m CD)	29.0	5.5	20.0	-23.0	OK
Case 4A (50 yr- WL +2.4m CD)	27.5	5.5	22.4	-27.6	OK

Ultimately, OCC|COWI determined the optimum GBF was Case 3.

3.3 Foundation-Soil Stiffness

The minimum required rotational spring stiffness of the soil-foundation for NREL 5.0 MW WTG was not provided. In general, the requirement is on the order of 20,000 to 50,000 MNm/radian, depending on the turbine.

Given the unavailability of the site-specific soil profile and strength information as well as the stiffness requirement from the turbine manufacturer, a rough estimate of rotational spring stiffness was carried out for a range of undrained shear strengths for the bottom glacial sediment. It was found that the rotational spring stiffness for the soil-foundation system is sufficient (>200,000 MNm/radian) with the expected soil conditions.

Foundation-Soil Stiffness was not updated for the modified design.

4 Structural Analysis

4.1 Analysis

Due to complicated interfaces between elements in the proposed gravity base foundation, the Bentley Systems STAAD.Pro V8i finite-element program was used to complete the structural analysis of the GBF. Initial concrete thicknesses were based on previous, similar COWI projects. Additionally, where possible, classical methods of analysis were used to validate the finite-element results.

4.2 Finite-Element Model

A STAAD model consisting of plate elements was built to reflect the geometry of the proposed foundation design; few deviations were made from the design geometry, and all deviations were conservative in nature. A skeleton frame of the model can be seen below in Figure 4-1. The typical thickness of the concrete plates was 0.5m (1.6 ft). Thicker concrete sections were modeled at the foundation level and other high stress locations. The bottom of the foundation was assumed to have a fixed connection under the mudline. Neither post-tensioned strands nor steel reinforcement were considered in the model.

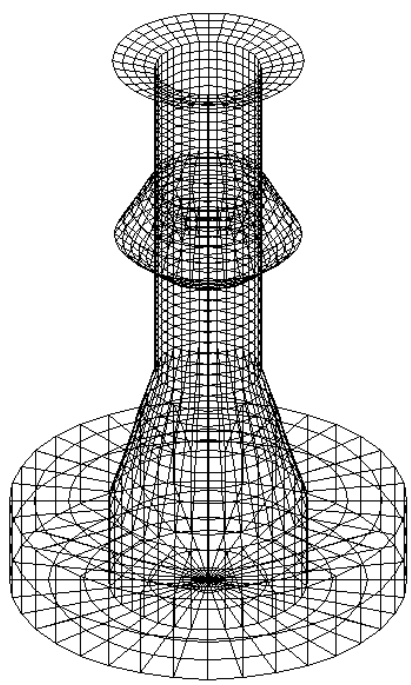

Figure 4-1: Frame Model of Foundation

Combined factored loads were applied to the model. These loads incorporate the critical wind, wave, and turbine loadings. In addition to these loads, hydrostatic and assumed soil pressures (see Table 3-1 above) were simulated. Ultimate limit states were also checked under a worst-case ice loading scenario. The model reflects extreme case loadings that can be expected once the foundation and wind turbine have been installed. Finite-element analysis was used to establish the maximum stresses and forces that would be generated from the critical loading scenario.

Post analysis of the model showed that the highest stress concentrations were produced from the combined factored turbine, wave and current loads. The finite element analysis indicated the post-tensioning of the concrete (both meridional and circumferential) would be required. A simplified analysis was completed to determine approximate post-tensioning requirements. The analysis included a comparison to similar COWI GBF designs and typical post-tensioning design requirements. Based on this limited assessment, approximately 20 kg of Grade 1860 MPa post-tensioning will be required per cubic meter of concrete. Based on previous experience with similar foundation designs, roughly 200 kg of Grade 500 steel reinforcement will likely be required per cubic meter of concrete. Based on preliminary analysis, this gravity based foundation design can withstand the identified critical loads as long as sufficient meridional and circumferential post-tensioning is applied.

4.3 Updated Structural Analysis

Member sizes of the updated GBF design, as compared with the initial GBF design are similar. Therefore, it is assumed that the stresses experienced by the updated GBF design are also similar (same order of magnitude) to the initial design. An updated structural analysis was not considered.

5 Other Considerations

5.1 Scour Protection

Given the presence of soft cohesive sediment and insignificant current at the lake bed, it is unlikely for scour to occur around the gravity base foundation. However, rubble/gravel protection adjacent to the foundation may be provided to increase overburden pressure to improve soil bearing capacity, if necessary during detailed design.

It is to be expected that the gravel/rubble fill will also displace the top soft sediment, thus requiring a larger quantity of fill material.

5.2 Gravel Bed

In this concept, it is assumed that the top soft clay layer will be dredged up to the bottom glacial sediment layer followed by filling of approximately 1.5m gravel layer.

The GBF will be founded on top of the prepared gravel bed. The design of gravel filter layer is not performed in this concept study.

5.3 Integrated Load Calculation

For the detailed design, it is assumed that a global load model will be established (by the wind turbine manufacturer) in order to carry out an integrated calculation of wind, ice or wave and current loads.

It is possible that such calculation will result in slightly lower loads than what has been assumed for this concept evaluation.

6 Comparison between initial and updated designs

A number of aspects of the Semi-Floating GBF design have changed between the initial and updated designs.

6.1 Materials

Modifications to material quantities are detailed in Table 6-1. These changes are due to:

- Increased buoyancy chamber diameter
- Decreases buoyancy chamber height
- Decreases overall structure height
- Updated best practice design from a solid concrete ice cone to an ice cone with concrete shell and sand fill

Table 6-1: Initial and Updated Material Quantities

Material	Initial GBF [1]	Updated GBF [2]	% Change
Concrete Volume	1834 m³	1683.5 m³	-8.2%
Ballast Volume	3258 m³	3117 m³	<-0.1%

Notes:
1: Based on Initial Calculation
2: Based on COWI software calculation

6.2 Lake Bed Preparation

As the updated GBF is founded at the top of the recent, dense sand layer 3m (10ft) below the lake bed, as opposed to 7.6m (25ft) for the initial GBF, the volume of excavation is reduced by nearly 70%. Further, due to the sediments below, the gravel bed has been reduced from 1.5m to 1m (5ft to 3ft).

Table 6-2: Initial and Updated Lake Bed Excavation

Material	Initial GBF	Updated GBF	% Change
Excavated Bottom Sediments	15812 m³	4800 m³	-69.6%
Gravel Mat	1115 m³	829 m³	-25.6%

6.3 OPC

Due to more technically advanced modeling techniques and the updated geotechnical characteristics, savings in work items such as reduced concrete volume, effectively equivalent ballast volume and a nearly 70% savings in lake bed preparation, the updated GBF is anticipated to save approximately $430,000 per foundation during fabrication and $1,304,000 during installation.

Though the updated GBF shows a fabrication and installation savings of approximately $1,734,000 per foundation, this savings is not reflected in overall LCOE calculations. This savings is due primarily to the incorporation of better information, rather than an "innovation" as defined by U.S. DOE. It is further recommended to use the prior LCOE values because it is unknown if the updated soil characteristics is found throughout Lake Erie. The values presented above demonstrate that further LCOE savings could be realized.

7 References

Brown, T.G. and Seify, M.El., *A Unified Model for Rubble Ice Load and Behavior*, Final Report, National Research Council of Canada, Report No. PERD/CHC 5-119, December 2005.

Dames and Moore, *Lake Bottom Geotechnical and Geophysical Studies*, Reports No. 5-1 & 5-2, May 1974.

Design of Offshore Wind Turbine Structures, Offshore Standard, DNV-OS- J101, 2011.

Dynamics Modeling and Loads Analysis of an Offshore Floating Wind Turbine, Technical Report, NREL/TP-500-41958, November 2007.

Ice Loads on Wind Turbine Structures in Lake Erie, C-Core Final Report, R-08-014-566, November 2008.

Marschall, et al, Prepared by, *Final Feasibility Report, Great Lakes Wind Energy Center Feasibility Study* submitted to Cuyahoga County, April 2008.

Verber, James, *Surface Water Movement, Western Lake Erie*, The Ohio Journal of Science, 53(1):42, January 1953.

MEMO

TITLE	Supplemental Flotation Summary
DATE	May 15, 2013
TO	Michael Hahn, U.S. DOE
COPY	Greg Matzat, U.S DOE Yelena Onnen, U.S. DOE Chris Wissemann, Freshwater Wind Scott Ameduri, Freshwater Wind Stanley White, Ocean and Coastal Consultants, Inc
FROM	Leah G. DeLeon
PROJECT NO	211080.0

ADDRESS Ocean and Coastal Consultants, Inc.
35 Corporate Drive
Suite 1200
Trumbull, CT 06611
USA

TEL +1 203 268 5007
FAX +1 203 268 8821
WWW ocean-coastal.com

1 Introduction

OCC|COWI has been tasked with preparing the conceptual design of an installation program for the gravity base foundations (GBF) designed for the "Shallow Water Offshore Wind System Optimization for the Great Lakes" (Freshwater) project. The overall project concept calls for a semi-floating GBF design. After GBFs are produced assembly-line style in a specially designed casting yard facility, they will be transported to the staging area and ultimately to the project site by floating the foundations using their internal buoyancy, supplemented by additional flotation units, eliminating the need for expensive offshore crane vessels. This memo discusses the design process and conceptual design of the supplemental flotation units.

2 Design Process

OCC|COWI prepared a task-specific design basis for the supplemental flotation unit concept design. The design basis includes the following constraints:

Table 1: Select Supplemental Flotation Design Constraints

Constraint	Value
Navigable Depth	8.2m (27 ft)
Launch Depth	8.2m (27 ft)
Navigational Clearance	0.5m (1.5 ft)
GBF Dimensions	See Semi Floating GBF Evaluation Summary" memo, (OCC|COWI, 2013)/attached drawing

During the conceptual design of the semi-floating GBF, the geotechnical stability and structural integrity of the GBF were verified for buoyancy chamber heights of 4m (13ft), 5m (16ft), 6m (20ft), and 7m (23ft). The intent of the alternative buoyancy chamber heights is to allow for optimization of the fabrication cost of the GBF as well as to optimize the supplemental flotation units, from both cost and stability/ effectiveness perspectives.

3 Alternative Float Systems Considered

Three (3) float system alternatives were initially considered and compared to optimize dimensional constraints and minimize costs of transporting the GBF to the site.

3.1 Alternative Concept 1

Alternative Concept 1 consists of four (4) equally-sized pontoons, pin-connected, with the maximum pontoon dimensions not exceeding the outer diameter of the GBF (outer dimensions of the pontoon system: 26m by 26m or 85 ft by 85 ft). The Alternative 1 concept failed an initial buoyancy check for each buoyancy chamber height. Due to draft limitations, and the dimensional constraints of this Concept 1 (maximum outer dimension of 26m (85 ft), the pontoon size could not be increased in order to increase the buoyancy of the system. Alternative Concept 1 was thus abandoned.

3.2 Alternative Concept 1A

Alternative Concept 1A consists of four (4) equally-sized pontoons, pin-connected, but not constrained in overall dimensions. This system allows for the increase of the supplemental flotation system in both the longitudinal and transverse directions, while maintaining a square system centered above the foundation's buoyancy chamber. Alternative Concept 1A was considered for each buoyancy chamber height, and iterated to produce pontoon dimensions required for a floating and statically-stable system.

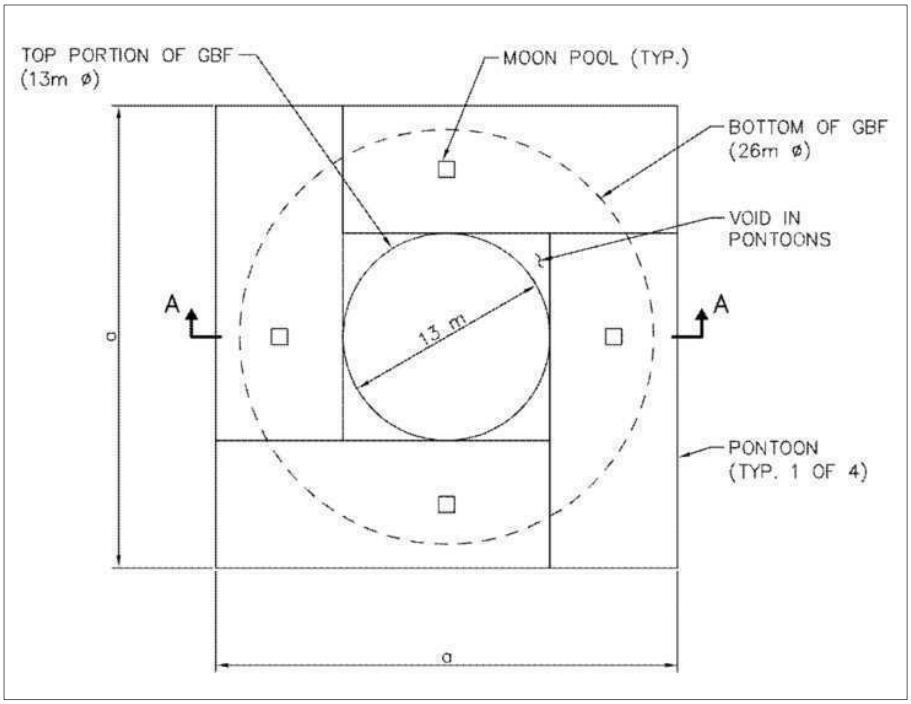

Figure 1: Pontoon system square configuration, Alternative 1A.

3.3 Alternative Concept 2

Alternative Concept 2 consists of a four (4)-pontoon system, pin-connected, constrained by 26 m (85 ft) in the transverse direction. The width dimension is equal to the buoyancy chamber diameter, while the length is sized to achieve minimum buoyancy and stability. This alternative allows for the expansion or reduction of the system longitudinally by increasing individual pontoon lengths and widths. Maintaining a 26m (85 ft) maximum width minimizes the span required by the GBF elevator shaft, effectively minimizing the cost of elevator construction and installation. Expanding the system longitudinally will not increase the span of the elevator system and can be achieved by extending the support piers. Alternative Concept 2 was considered for each buoyancy chamber height, and iterated to produce pontoon dimensions required for a floating and statically-stable system. Intuitively, smaller buoyancy chamber heights require expanding the system longitudinally to achieve a composite system that floats.

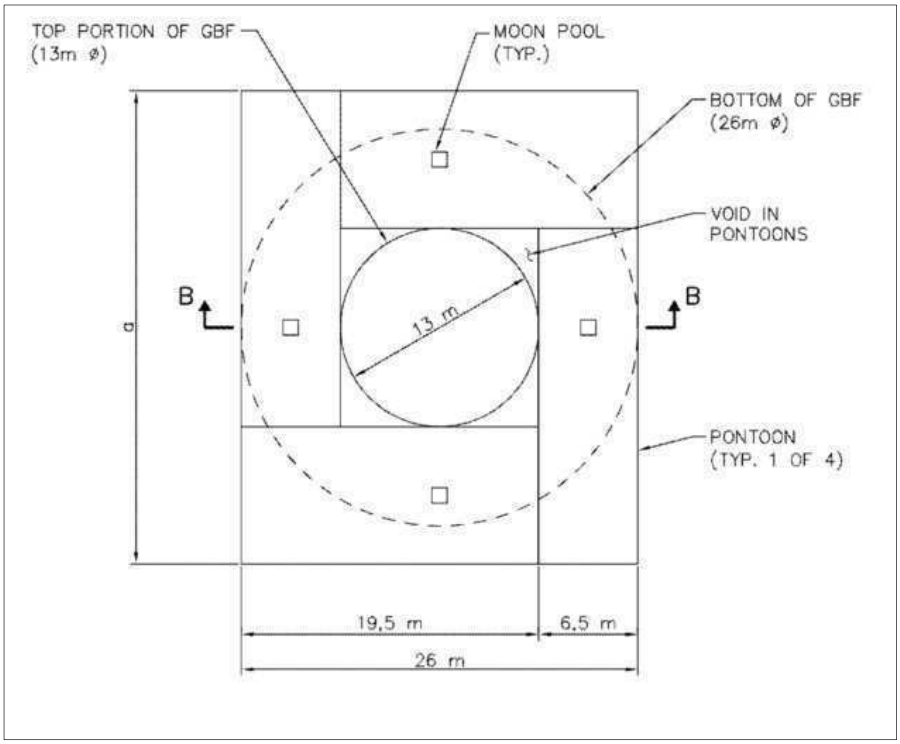

Figure 2: Pontoon system constrained by elevator shaft width, Alternative 2.

4 Summary of Calculations

- Required supplemental buoyancy is calculated for each Buoyancy Chamber Height (BCH) (4m (13ft), 5m (16ft), 6m (20ft), and 7m (23ft)). It is assumed loading is symmetrical, and thus the supplemental buoyancy required is distributed evenly to each pontoon in each configuration.

- Assume allowable pontoon dimensions for each Alternative Analysis configuration.

  - Alternative 1 pontoon dimensions constrained to equal dimensions less than the outside diameter of the GBF buoyancy chamber (26m by 26m (85 ft by 85 ft)).

  - Alternative 1A pontoon dimensions unrestrained by elevator dimensions, but designed to maintain square shape to distribute "overhang" above buoyancy chamber.

- Alternative 2 pontoon dimensions constrained laterally to 26m (85 ft) width of elevator, but unrestrained longitudinally.

- A Barge Material Worksheet was developed and used to produce a projected dry weight for varying pontoon sizes. Scaling factors were developed based on a typical barge framing plan and member sizes. The scaling factors consider barge components of transverse trusses, transverse bulkheads, longitudinal bulkheads, rake trusses, rake panel plating sides/top/bottom, main panel plating for the deck/bottom/sides, and deck fittings.

- A preliminary flotation check was conducted for each Alternative, and each buoyancy chamber height within each Alternative analysis. Flotation calculations are based on Archimedes Principle, which equates the buoyant force acting on an object to the weight of the water the object displaces.

  - Alternative 1 initial flotation calculations are based on GBF weight, and dimensions of each pontoon, yielding the depth required for each pontoon to remain afloat. As pontoon dimensions are fixed for this alternative, the output of a flotation check yields required depth of pontoon. The required pontoon depths to produce adequate flotation for the GBF loading added to the GBF buoyancy chamber heights exceed draft constraints. The system is effectively grounded before taking into account self-weight of the barges. Alternative 1 is not a feasible option for further study.

  - Alternative 1A flotation calculations are based on GBF weight, system square dimensional constraint, estimated barge self-weight loading, estimated winch loading, and a one (1)-meter reserve buoyancy for each pontoon. The flotation calculation yields the minimum pontoon sizes required to float the GBF for a composite square system for each buoyancy chamber height.

  - Alternative 2 flotation calculations are based on GBF weight, a 26 m (85 ft) width constraint, estimated barge self-weight loading, estimated winch loading, and a one (1)-meter reserve buoyancy for each pontoon. The calculation yields two (2) pontoon sizes per configuration, for each buoyancy chamber height. Width of one (1) pontoon and length of adjacent pontoon are held constant, while opposing length and width respectively are output values. The pontoon dimensions produced minimize the longitudinal extension of the system, while floating the GBF.

- Pontoon dimensions produced by flotation analysis of Alternative 1A and Alternative 2 for 4m (13ft), 5m (16ft), and 6m (20ft), BCHs are iterated based on a revised pontoon weight. Note that at this point the 7m (23 ft) buoyancy chamber height option is eliminated due to draft constraints. Pontoon dimensions

are used as input values in the Barge Material Take-off worksheet, yielding barge dry weight values approximating dry weight estimates used for flotation calculations. Pontoon dimensions and pontoon weights are thus adjusted through the process of iteration.

Table 2: Iterated Barge (Pontoon) Weights.

Barge System Weight Summary Table			
Alternative 1A	4m B.C.	5m B.C	6m B.C.
Barge System Weight (short tons)	83.0	81.0	87.0
Barge System Weight (tonnes)	75.3	73.5	78.9
Number of pontoons	4.0	4.0	4.0
Total System Weight (tonnes)	301.1	293.9	315.6
	301	**294**	**316**
Alternative 2	4m B.C.	5m B.C	6m B.C.
Barge System Weight_1 (short tons)	81.0	76.0	76.0
Barge System Weight_1 (tonnes)	73.5	68.9	68.9
Number of pontoons	2.0	2.0	2.0
Barge System Weight_2 (short tons)	85.0	86.0	99.0
Barge System Weight_2 (tonnes)	77.1	78.0	89.8
Number of pontoons	2.0	2.0	2.0
Total System Weight (tonnes)	301.1	293.9	317.5
	301	**294**	**317**

Table 3: Pontoon Dimensions - individual and overall system dimensions

PONTOON DIMENSIONS SUMMARY TABLE			
ALTERNATIVE 1A			
PONTOON	4m B.C.	5m B.C.	6m B.C.
LOA m (ft)	19.9 (65.3)	20.7 (67.7)	22.3 (73.1)
Beam m (ft)	6.9 (22.6)	7.7 (25.0)	9.3 (30.5)
Depth m (ft)	4.7 (15.4)	3.7 (12.1)	2.7 (8.9)
Outer Dimension m (ft)	26.8 (87.9)	28.3 (92.8)	31.6 (103.6)
ALTERNATIVE 2			
PONTOON 1	4m B.C.	5m B.C.	6m B.C.
LOA m (ft)	20.3 (66.6)	21.9 (71.8)	25.8 (84.6)
Beam m (ft)	6.5 (21.3)	6.5 (21.3)	6.5 (21.3)
Depth m (ft)	4.7 (15.4)	3.7 (12.1)	2.7 (8.9)
PONTOON 2	4m B.C.	5m B.C.	6m B.C.
LOA m (ft)	19.5 (64.0)	19.5 (64.0)	19.5 (64.0)
Beam m (ft)	7.3 (23.9)	8.9 (29.2)	12.8 (42.0)
Depth m (ft)	4.7 (15.4)	3.7 (12.1)	2.7 (8.9)
Outer Dimension m (ft)	27.6 (90.5)	30.8 (101.0)	38.6 (126.6)

› Initial static stability calculations assume that the composite supplemental flotation system (four (4) pontoons and associated winches) is secured tightly to the top of the GBF buoyancy chamber. Assuming a rigid connection between the GBF and the flotation system allows for a static stability analysis of a composite body with fewer degrees of freedom. (See Figure 3).

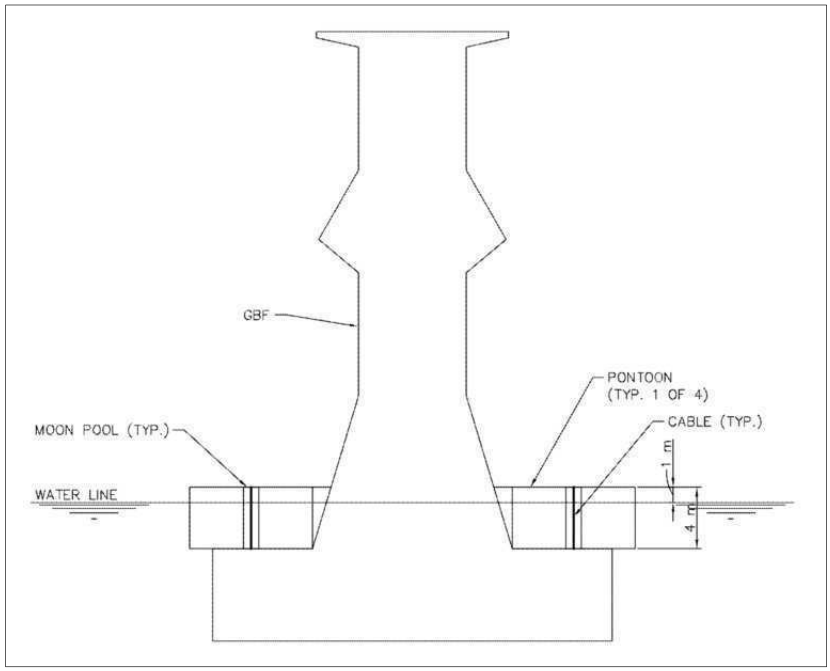

Figure 3: GBF in tow position, limiting position for system stability (winches not shown).

- Calculate waterplane moment of inertia based on the area occupied by the submerged composite system at the elevation of the waterline. In this case, the waterplane area consists of the outer pontoon area (square for Alternative 1A and rectangular for Alternative 2) and the lower GBF tapered area, less the inner square between the pontoons and the GBF. The area between the pontoons and GBF, and GBF tapered base area are considered constant for each buoyancy chamber. However, the outer pontoon system dimension varies. It should be noted that the lower GBF tapered diameter is used for the purposes of this calculation, while in reality, the tapered area to be subtracted depends on the draft of the system. This calculation produces waterplane moments of inertia for each alternative and each buoyancy chamber height therein.

- Calculate composite center of buoyancy for each system alternative, and buoyancy chamber height. The center of buoyancy is calculated first for the submerged GBF, for each buoyancy chamber height option. Then the center of buoyancy for each pontoon system is calculated. The analysis produces a composite center of buoyancy output value for each alternative and each buoyancy chamber height option.

› The composite center of gravity for the rigid system is calculated similarly to the composite system center of buoyancy. This calculation requires the vertical locations and magnitudes of the respective centers of gravity for the pontoons, winches, and GBF to yield a composite center of gravity for the system.

› Locating the system's metacenter is essential to determining the system's static stability. The metacenter is determined by the system's waterplane moment of inertia and total volume. Static stability of the system is quantified by the system's metacentric height, which is the distance between the system's center of gravity and metacenter. A greater metacentric height directly correlates to greater stability of the vessel.

Table 4: Metacentric Heights (GM) for Alternative 1A Pontoon Configuration

ALTERNATIVE 1A METACENTRIC HEIGHTS			
	4m (13ft)	**5m (16ft)**	**6m (20ft)**
KG m (ft)	11.8 (38.9)	11.7 (38.5)	11.7 (38.2)
KB m (ft)	4.1 (13.3)	4.3 (14.1)	4.4 (14.3)
BG m (ft)	7.8 (25.6)	7.5 (24.4)	7.3 (23.9)
KM m (ft)	9.0 (30.0)	10.6 (34.8)	16.5 (54.1)
GM m (ft)	**1.2 (4.1)**	**3.1 (10.2)**	**9.2 (30.2)**

Table 5: Metacentric Heights (GM) for Alternative 2 Pontoon Configuration.

ALTERNATIVE 2 METACENTRIC HEIGHTS			
	4m (13ft)	**5m (16ft)**	**6m (20ft)**
KG m (ft)	11.9 (39.0)	11.8 (38.7)	11.7 (38.4)
KB m (ft)	4.1 (13.3)	4.1 (13.4)	4.2 (13.8)
BG m (ft)	7.9 (25.8)	7.7 (25.3)	7.5 (24.5)
KMxx m (ft)	9.6 (31.5)	13.2 (43.3)	25.6 (84.0)
Kmyy m (ft)	8.5 (27.8)	9.3 (30.6)	11.5 (37.6)
GMxx m (ft)	**1.8 (5.7)**	**5.5 (18.0)**	**18.1 (59.4)**
GMyy m (ft)	**0.6 (5.3)**	**1.6 (5.3)**	**4.0 (13.1)**

› The data above allows for advancing the analysis to include dynamic influences on the system. Using the information above, it is possible to calculate the system's righting moment arm while in the tow position (composite single body system). A vessel's righting moment arm (GZ) can be used to calculate the system's righting moment (M), which reflects the system's resistance to rotational

disturbance. This value is generated using the Wall-Sided Formula for each alternative system configuration (Rawson & Tupper, 1983). Application of the Wall-Sided Formula is a simplification for the combined GBF/pontoon system. However, it should provide an initial "reality check" for the stability of this configuration. Before calculating the righting moment for each alternative, the pontoon's heel angle to the deck awash condition (maximum righting moment) is determined for each direction, alternative and BCH.

Table 6: Maximum Heel Angles (Theta) For Alternative 1A in the Tow Position

ALTERNATIVE 1A MAXIMUM HEEL ANGLES - TOW POSITION (XX = YY)				
BCH (m)	**System Width (m)**	**2m/w**	**φ = SIN-1(2/w)**	**ANGLE θ (DEG)**
4	26.8	0.074627	0.074557617	**4.271837**
5	28.3	0.070671	0.070612565	**4.045802**
6	31.6	0.063291	0.063248893	**3.623895**

Table 7: Maximum Heel Angles (Theta) for Alternative 2 in the Tow Position

ALTERNATIVE 2 MAXIMUM HEEL ANGLES - TOW POSITION (XX)				
BCH (m)	**System Width (m)**	**2m/w**	**θ = SIN-1(2/w)**	**ANGLE θ (DEG)**
4	26.00	0.076923	0.076847238	**4.403022**
5	26.00	0.076923	0.076847238	**4.403022**
6	26.00	0.076923	0.076847238	**4.403022**
ALTERNATIVE 2 MAXIMUM HEEL ANGLES - TOW POSITION (YY)				
BCH (m)	**System Length (m)**	**2m/L**	**θ = SIN-1(2/L)**	**ANGLE θ (DEG)**
4	27.60	0.072464	0.072400367	**4.148235**
5	30.80	0.064935	0.064889441	**3.717891**
6	38.60	0.051813	0.051790291	**2.967365**

› Alternative 1A righting moment arm is calculated for the composite system in the tow position. As the system is square, the metacentric heights are equal about each axis. Moments are calculated in both degree-meters and degree-feet representing the system's resistance to rotational disturbance. The graph below is representative of the graphical method of approximating righting moments used for each alternative and each buoyancy chamber height by integrating under the curve up to a given overtopping angle.

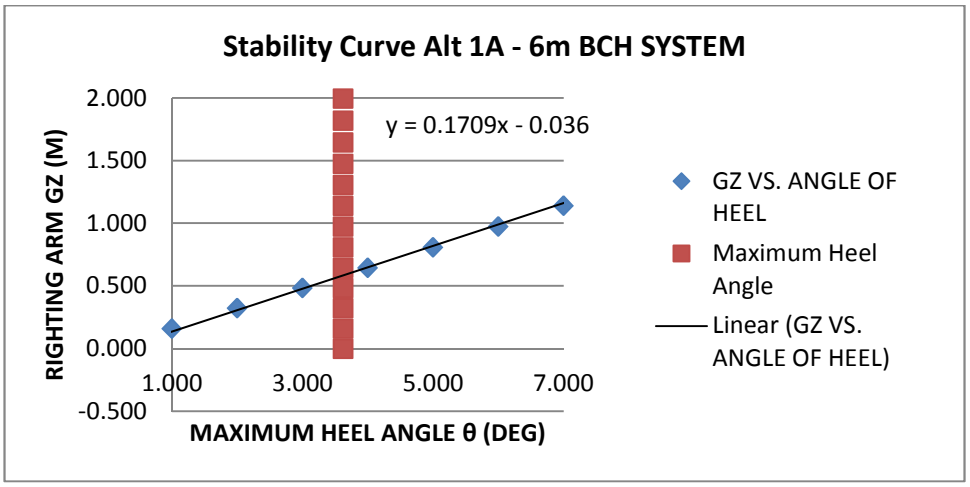

Figure 4: Representative Stability Curve Used to Determine Righting Moment .Note: the graph shows the righting arm based on the wall-sided assumption extending beyond the maximum heel angle (i.e. additional freeboard). If the heel angle exceeds the freeboard, the righting arm curve will decrease.

Table 8: Righting Moments (M) for Alternative 1A in the Tow Position.

ALTERNATIVE 1A - RIGHTING MOMENTS TOW POSITION			
BCH	**4m (13ft)**	**5m (16ft)**	**6m (20ft)**
GM m (ft)	1.2 (3.9)	3.1 (10.2)	9.2 (30.2)
M (deg*m)	0.2	0.5	1.1
M (deg*ft)	0.7	1.5	3.5

› Alternative 2 righting moment arm is also calculated for the less stable direction. As the system length is greater than its width, both GM values are considered, and the controlling GM value about the Y-axis is selected for analysis as it yields the controlling righting moment arm values for the system. This is due to the fact that the waterplane moment of inertia about the Y-axis is smaller for this system, yielding a smaller metacentric height and a correspondingly lower stability.

Table 9: Righting Moments (M) for Alternative 2 in the Tow Position

ALTERNATIVE 2 - RIGHTING MOMENTS TOW POSITION			
BCH	**4m (13ft)**	**5m (16ft)**	**6m (20ft)**
GM m (ft)	0.63 (2.1)	1.6 (5.3)	4.0 (13.1)
M (deg*m)	0.1	0.2	0.3
M (deg*ft)	0.3	0.6	1.0

› The static stability analysis above is only applicable to the system when the system acts as one (1) composite body. During lowering and lifting of the GBF, the composite system will act more as two (2) independent bodies/systems. System 1 consists of the GBF alone. System 2 consists of the pontoons and winches which are assumed to act as a single rigid body for the following analysis. As the GBF is lowered into the water, the GBF's buoyancy increases, lowering the tension in the winch lines (See Figure 5).

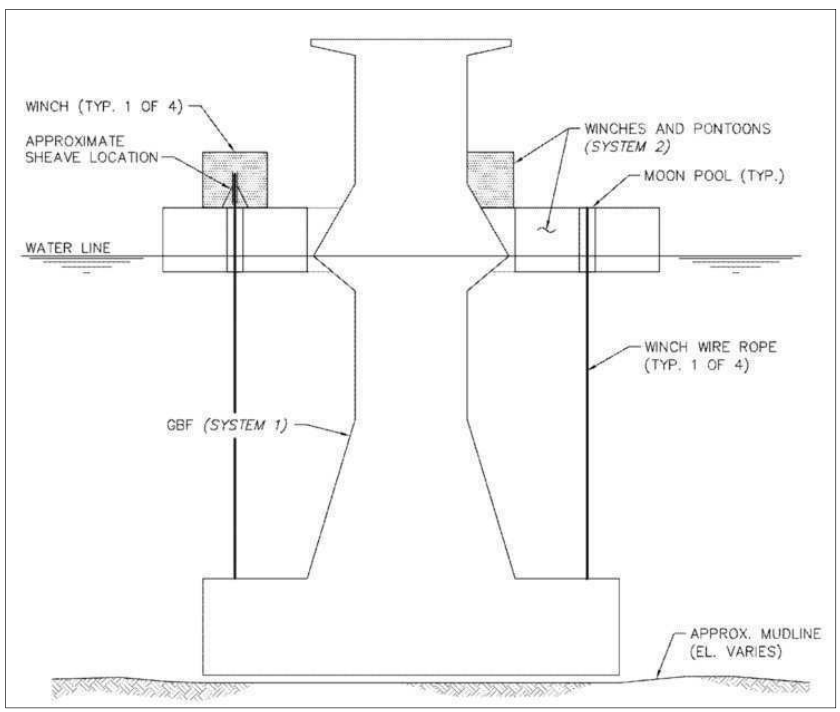

Figure 5: GBF in lowered position, System 1 separated from System 2.

› An initial static analysis is performed on the system approximating conditions during the moment at which the GBF separates from the supplemental flotation system. At this point, the composite system separates into System 1 and System 2 (See Figure 5). Buoyant forces acting on the

GBF and pontoons are basically the same values used for the single rigid system analysis. The pontoons and winches (System 2) are analyzed independently for static stability. The loading due to the weight of the GBF is incorporated into the analysis by applying the weight (force) of the GBF at the vertical elevation of the sheaves. This analysis yields greater metacentric heights than analysis of the system as a composite body. The center of gravity of the combined system is higher than the center of gravity for the pontoons with the GBF weight applied at the sheaves. As such, it is unnecessary to consider the dynamic stability of this positioning as the tow position will govern the final design of the supplemental flotation system. Refer to representative metacentric heights calculated for this scenario in the table below.

Table 10: Metacentric Heights (GM) Immediately Upon Separation of System 1 from System 2 for Alternative 1A.

ALTERNATIVE 1A METACENTRIC HEIGHTS SEPARATION OF S1 FROM S2			
BCH	**4m (13ft)**	**5m (16ft)**	**6m (20ft)**
KM m (ft)	17.2 (56.4)	25.0 (82.1)	48.3 (158.4)
KG m (ft)	6.0 (19.8)	5.0 (16.4)	3.9 (12.9)
GM m (ft)	11.2 (36.6)	20.0 (65.6)	44.4 (145.5)

- As the system separates, the pontoon drafts decrease slightly. This is due to additional buoyant force acting on the GBF as it is lowered, decreasing tension in the lines. An approximate "snapshot" static analysis can be performed at any point as the GBF is lowered to the mudline. When System 1 is completely submerged, a static analysis can be used to determine remaining tension in the winch lines. This is the point at which the GBF will have the most buoyancy.

  - A simple flotation check when the GBF is submerged to approximately the excavated mudline in both alternative cases demonstrates that the GBF will reach a point at which it will float independently of the pontoons and the force of tension in the winch line is equal to zero (0) for buoyancy chamber heights of 5m and 6m. This is indicated in the table below by negative tension forces in the winch lines. As shown in the table, the system modeled with a 4m buoyancy chamber height will maintain tension loading on the winch lines all the way to the mudline. This is indicated by a positive force value in the table below.

Table 11: GBF Flotation Check, as Indicated by Force of Tension in Winch Lines.

FLOATATION CHECK FORCE OF TENSION IN WINCH LINES			
BCH	**4m (13ft)**	**5m (16ft)**	**6m (20ft)**
MASS GBF (tonnes)	4101.0	4212.0	4322.0
VOLUME GBF (m^3)	3694.3	4225.2	4756.2
WEIGHT GBF (tf)	406.7	-13.2	-434.2
FT (tf)	406.7	-13.2	-434.2
FT PER PONTOON (tf)	**101.7**	**-3.3**	**-108.5**
FT Per Pontoon (Kips)	224.1	-7.3	-239.3

› Approximating the force of tension in the lines as being zero (0) force-tonnes (0 Kips) when BCHs of 5m (16ft), and 6m (20ft) are lowered, a stability analysis is conducted to portray the system's metacentric height and resistance to rotational disturbance during a later stage of installation. It should be noted that while the GBF is being lowered, especially for BCHs of 5m (16ft), and 6m (20ft), the GBF will need to be ballasted to gradually sink the foundation to the mudline. For BCHs of 5m (16ft), and 6m (20ft), the stability analysis assumes that the ballasting process occurs gradually such that the force of tension in the winch lines approximates zero (0) as the GBF is lowered. The force of tension in the winch lines for the 4m buoyancy chamber height is approximated by the GBF's submerged weight at any given vertical location. The tables below represent metacentric heights and righting moments for the supplemental flotation system (System 2) immediately before the submerged GBF reaches the excavated mudline. The same procedure is applied here to determine righting moments, as described above, for the single system (tow position) analysis.

Table 12: Righting Moments (M) for Alternative 1A in the Submerged GBF Position.

ALTERNATIVE 1A RIGHTING MOMENTS SUBMERGED POSITION			
BCH	**4m (13ft)**	**5m (16ft)**	**6m (20ft)**
GM m (ft)	10.1 (33.2)	15.8 (51.7)	28.9 (94.8)
M (deg*m)	16.0	19.8	14.8
M (deg*ft)	52.6	64.9	48.5

Table 13: Righting Moments (M) for Alternative 2 in the Submerged GBF Position.

ALTERNATIVE 2 RIGHTING MOMENTS SUBMERGED POSITION			
BCH	**4m (13ft)**	**5m (16ft)**	**6m (20ft)**
GM m (ft)	55.7 (182.7)	68.7 (225.2)	89.3 (292.8)
M (deg*m)	124.6	72.8	30.7
M (deg*ft)	408.6	238.7	100.5

4.1 Discussion of Calculations

The metacentric height and righting moment calculations above demonstrate that the system is most susceptible to instability and rotational disturbance while in the tow position. While the GBF is above the water, and the greatest force of tension is acting on the winch lines, the system is less stable. As the GBF is lowered, buoyant forces acting on the submerged portion of the GBF gradually release tension on the winch lines and lower the system's center of gravity, increasing stability.

For both alternatives, the metacentric heights in the tow position are considerably lower than when the GBF is lowered. The 6m (20ft) buoyancy chamber height allows for additional stability when the system acts as a single composite body (tow position), as compared to 4m (13ft), and 5m (16ft) buoyancy chamber heights. Conversely, the 6m buoyancy chamber height yields a lower degree of stability for when the GBF is being lowered. This is due to the lower draft on the pontoon for the 6m BCM system.

The lowest system stability (defined by this study) is achieved by Alternative 2 (YY orientation) for the 4m (13ft) buoyancy chamber height while in the tow position. While Alternative 2 was initially proposed to minimize costs associated with increasing the span (width) of the elevator shaft, it may not compensate adequately for the effective reduction in system stability. The stability of the supplemental flotation system is effectively limited by the 26m (85 ft) width constraint.

It should be noted that stability of the pontoon system increases when the GBF is lowered into the water. However, this increases the complexity of the analysis since the pontoons and GBF will respond independently to outside forces. The results of the static stability analysis were compared to standard regulatory values. The Code of Federal Regulations (US Coast Guard) indicates an acceptable minimum Righting Moment is 4.6 deg-m (15 deg-ft) for the Great Lakes (winter) (CRF 46, 2002). While there may be some questions about applicability of this reference, it does provide a point of comparison. None of the alternatives considered provided sufficient static stability to meet this requirement.

5 Operations

The proposed pontoons can be constructed in any shipyard or steel fabrication facility to specification. It is likely that a shipyard would be more familiar with the framing structure required for fabrication.

It is assumed that the GBF will be lowered into the water with the elevator and the pontoons will be situated around the GBF in a rectangular configuration (See Figures 1 and 2). The winches will be engaged, lifting the GBF until the top of the buoyancy chambers are at the bottom of the pontoon. As this occurs, the pontoon draft will increase.

The pontoons are assumed to act as a rigid body, and the winch's heave compensation system will serve to stabilize the system during transport and lowering of the GBF into position. The system will likely be towed to the wind farm site by two (2) tugs with one (1) tug on standby. As the GBF is lowered into position it will be ballasted gradually with water or fill material. When the GBF is in position, it will be stabilized with additional fill.

6 Areas of Future Study

The stability of the supplemental flotation alternatives presented above is low. As such, the following areas of future study consider methods of increasing the system stability without adding considerably to the cost of towing and installation.

It may be beneficial to consider the costs associated with increasing the span of the elevator shaft to accommodate a composite square system, which will limit the waterplane area expansion required to increase system stability. The system will only be as stable as its weakest axis allows. Alternative 2 does not optimally increase stability because, even if its length is increased substantially, its stability will be limited by the system width.

The GBF could potentially be towed in a partially-submerged position. This would lower tension in the winch lines (due to additional buoyant forces on the GBF) and lower the system center of gravity. Both of these effects increase system stability. This will require a much more complex stability analysis as the pontoons and GBF will respond independently. Another area of future study might be to consider increasing the freeboard of the pontoon systems. This will have to be accomplished without increasing the system draft, as the composite system (GBF chamber heights and pontoon drafts) cannot exceed 7.7m (25.3 ft) in the harbor. Increasing the freeboard of the vessels is a viable option as adding to the depth of the pontoons will not add significantly to the weight of the system, but it will add considerable stability. Adding

two 2m of freeboard would more than double the righting arm of the systems. Increasing the pontoon freeboard by 2m to 3m (6.6 ft to 9.8 ft) will not increase costs significantly as it will not require expansion of the elevator shaft and the pontoons will be custom-built in either case.

As the draft limitations are primarily for the inner harbor area. It may be possible to have two separate sets of pontoons. One specifically for inner harbor movement (with lower stability requirements) and one for the offshore installation work, with higher stability. This may be a good option to limit the effects of the inner harbor draft and elevator system constraints.

7 Conclusions

The above analysis indicates that the pontoon transport system is constrained by draft in the harbor; the elevator dimensions and stability when the GBF is being towed.

Alterations to either the supplemental flotation dimensions or elevator constraints will ultimately have to be made to increase stability of the system to standard accepted levels.

Applying one (1) or more of the alternatives presented above can improve system stability to required levels, allowing for safe transport and installation of the GBF.

8 References:

C.F.R. Title 46, *Shipping*, Chapter 9, Section 151.10-5 (last updated October 1, 2002).

Rawson and Tupper, *Basic Ship Theory*, Volume 1 Third Edition, Longman London and NY Print, (1983).

MEMO

TITLE	Barge Winch System Summary
DATE	Original Date: May 15, 2013 Modified Date: January 30, 2014
TO	Project File
COPY	Stanley White, Joseph Marrone, Brent D. Cooper
FROM	Danielle M. Somma
PROJECT NO	211080.0

ADDRESS Ocean & Coastal Consultants, Inc.
35 Corporate Drive
Suite 1200
Trumbull, CT 06611
USA

TEL +1 203 268 5007
FAX +1 203 268 8821
WWW ocean-coastal.com

1 Introduction

As part of the "Shallow Water Offshore Wind System Optimization for the Great Lakes" (Freshwater) project, OCC|COWI has been tasked with preparing the conceptual design of the installation program for the gravity-base (GBF) foundations. The overall project concept calls for a semi-floating GBF design. The GBFs are produced assembly-line style in a specially designed casting yard facility. They will then be transported to the staging area and ultimately to the project site by floating the foundations using their internal buoyancy supplemented by additional flotation units (pontoons), thus, eliminating the need for expensive offshore crane vessels during foundation installation. This memo discusses the winch system and its components that will be installed on the pontoons and utilized in the transportation and installation of the GBFs.

1.1 Project Details

The transportation of the concrete GBF entails the utilization of four (4) pontoons and a winch system as shown in SK-15-01. The winch system will pick up the GBF, transport it, and then lower it into place on the seabed as shown in Appendix 2, Sketches SK-15-02 and SK-15-03.

The GBF's weight, in air, is approximately 4,000 to 4,500 tonnes. However, when the semi-floating type of GBF is moved into the water, its integrated buoyancy chambers provide a substantial amount of floatation. The pontoons have also been designed to provide additional flotation, as well as stability during transportation/installation. The table below outlines the supplemental flotation required relative to the size of the buoyancy chamber.

Table 1 Supplemental Flotation Required per Buoyancy Chamber Alternative

Buoyancy Chamber Height	Supplemental Flotation Required
4m	1,500 tonnes
5m	1,200 tonnes
6m	900 tonnes
7m	600 tonnes

Based on stability provisions and the GBF fabrication cost (see the associated memo: Supplemental Flotation System Summary), 5m (16 ft) is the recommended buoyancy chamber height. As such, the concept design for the winch system considered a design load of approximately 1,200 tonnes (1320 tons).

For the Freshwater project concept design, the bottom elevation of the GBF is assumed to be -27.6m (-90 ft) (Chart Datum) based on a -20m (-65 ft) mudline elevation. Therefore, to allow for regional application (for installations in water up to 40m (130 ft) deep), the maximum depth for the bottom of the GBF was assumed to be approximately 50m (164 ft).

It should be noted that the size and overall cost of the whole system is greatly dependent on the design safety factor which is contingent on the codes and standards used for the design. Typically a safety factor of 1.2:1 is used in the design of a winch and according to API Specification 2C, for Offshore Pedestal-mounted Cranes, a design safety factor between 1.2:1 and 1.5:1 is typically used for the design of crane-support structures. Also, according to API Specification 2C the typical design safety factor for wire rope is between 3:1 and 5:1. In certain applications, such as vessel mooring, wire rope safety factors can be as low as 2:1.

1.2 Winch System

Several different potential winch configurations were considered; from a simple single part system to a multi-part pulley system. The sketch numbers noted in this section refer to the sketches found in Appendix 2 of the Freshwater Summary Report.

1.2.1 Winch with a Single Part Arrangement

The winch system will consist of one (1) winch per pontoon with the wire from each winch connecting directly to the GBF as shown in Sketch SK-15-04. Therefore, a total of four (4) winches will carry an equal load of approximately 310 tonnes each. Each winch will be a single drum winch with 50 m of wire rope to allow for regional application. Sketches SK-15-05 and SK-15-06 depict an approximate size winch required for the single part arrangement.

1.2.2 Winch with a Two Part Arrangement

The winch system will consist of one (1) winch per pontoon with the wire from each winch going through a two-part arrangement as shown in Sketch SK-15-07. A total of four (4) winches will carry an equal load of approximately 155 tonnes each. Each winch will have 100m (330 ft) of wire rope to allow for regional application and wire required to stay on the drum.

1.2.3 Winch with a Multi-Fall Arrangement Pulley System

The winch system will consist of one (1) winch per pontoon with the wire from each winch going through a multi-fall arrangement pulley system as shown in Sketch SK-15-08. The load carried by each winch will be dependent on the number of falls within the arrangement. For example, with a five-fall arrangement, the four (4) winches will carry an equal load of approximately 60 tonnes (310 tonnes/5) each. The wire rope length is also dependent on the number of falls within the arrangement. With the five-fall arrangement, each winch will have 250m (820 ft) of 50 mm x 5 (2" x 5) wire rope plus an allowance for wire needed to remain on the drum.

1.3 Winch Drive System

The winches can be either electrically or electro-hydraulically driven. The description of each drive and a comparison between the two is provided below.

1.3.1 AC Electric Drive Winch

An AC electric drive winch system is comprised of a variable frequency drive (VFD), an AC induction motor, a reduction gearbox, a sensor feedback and control system, a cooling system, and a brake system. The use of electric winches has increased among new commercial fishing vessels and research vessels in Europe and in the USA within the last five (5) to10 years. Electric drive winches are preferred due to their reduced energy consumption, reduced maintenance, precision control, and no hydraulic oil required.

- Efficiency: Electric drive winches have reduced energy consumption due to winch efficiency (input/output power) and power generated during regeneration braking. Their efficiency is estimated to be between 70% and 80%.

- Reliability: Fewer moving parts typically increase system reliability over time. However, failures of electric drives, power supplies and controls can occur.

- Heating and Cooling Issues: Failure to the AC motor and VFD can occur due to lack of cooling, moisture, and contaminants. The solution to this issue is water cooled motors and enclosures. However, the solution increases the cost of the system and requires cooling water.

- Environmental Impacts: Faulty electrical components must be disposed of through proper channels.

1.3.2 Electro-Hydraulic Drive Winch

An electro-hydraulic drive winch system is comprised of a hydraulic power unit (HPU), a hydraulic motor, a sensor feedback and control system, and a braking system. Electro-hydraulic winches have been used in the marine environment for decades. They are preferred for their reliability, especially in extreme environments, their adaptability to various operating conditions, and their precision control. They are also relatively simple to operate and maintain.

- Efficiency: Electro-hydraulic winches have an estimated efficiency of 45% to70%.

- Heating and Cooling Issues: Poor performance of the hydraulic fluid during periods of hot and cold temperatures. The solution to this issue includes incorporating immersion heating and cooling systems. While these systems are not as expensive as the solutions for an electric system, they do increase the piping required to deliver fluid to the winches

- Environmental Impacts: Dirty hydraulic fluid, hydraulic filters and cleaning rags must be disposed of through proper channels and there is always potential for hydraulic fluid spills.

1.3.3 Comparison Between Electric and Electro-Hydraulic

- Energy Efficiency: Electric winches use power directly from generator sets as opposed to hydraulic winches which rely on fluid power to perform work. Producing fluid power requires the addition of a motor-pump and associated hydraulic systems between the generator-sets and the winch. This extra power conversion generates waste energy and requires between 25% and 30% more electric power to produce the same level of winch performance. However, fluid power drives are favored for high-powered intermittent uses, such as cranes.

- Size and Weight: In most cases, hydraulic drives, pound for pound, produce greater power than electric drives.

- Complexity: Hydraulic systems add a level of complexity that electric powered winches do not have, in that electric controls govern hydraulic valves which control the winch motor. Eliminating hydraulics simplifies the man-machine interface.

- Routine Maintenance: Hydraulic motors, pumps and valves experience wear at the mechanical and fluid interfaces. Filters require periodic replacement, while o-

rings and seals require monitoring to prevent leaks and spills. Typical maintenance of an all-electric system includes periodic inspections and bearing and gear lubrication. Eliminating the hydraulic system cuts the recurring expense of maintenance labor, consumables, and parts and removes the need for hydraulic fluid disposal.

- Environmental Factors: The potential for spills from hydraulic systems require prevention and response planning and preparation. A hydraulic pump generates more noise than an electrical system.

- Installation and Machine Costs: Installation of piping, fittings and hydraulic components is approximately five (5) to10 times more expensive than running wires and conduits. However, the difference in installation costs is not significant when comparing complete system costs.

Table 2 Ease of Maintenance

Parameter	Electric Drive	Electro-Hydraulic Drive
Routine Maintenance	Minimal	Significantly greater
Preventive Maintenance	Minimal	Significantly greater
Troubleshooting and Repair	Time consuming to troubleshoot Specialized electrical training	Easier to troubleshoot Familiarity with technology
Spare Parts	Less consumables Repair by replacement requires larger quantity of spares Limited to specific suppliers	Suppliers worldwide Parts can be manufactured or used from other available systems

Table 3 Winch Drive Summary

Parameter	Electric Drive	Electro-Hydraulic Drive
Size and Weight	Good	Bad
Energy Consumption	Very Good	Good
Reliability	Very Good	Very Good
Maintainability	Satisfactory	Very Good
Acquisition Cost	Higher	Lower
Installation Cost	Very Good	Very Good
Maintenance Cost	Lower	Higher
Tension, Speed and Payout Control	Very Good	Very Good
Heating & Cooling	Good	Good
Environmental Impacts	Very Good	Satisfactory

1.4 Wire Rope

The winch system requires a wire rope with the necessary tensile strength, fatigue, and rotational properties. The wire rope is typically recommended by the winch manufacturer. However, one of the wire rope designs listed below would most likely be applicable for the Freshwater project winch system.

1.4.1 Hydra 7500 Dyform

A multi-strand rope that offers exceptional low rotational properties and `incorporates a high steel fill factor that provides high strength, crush resistance, improved fatigue performance and low stretch.

1.4.2 Hydra 5500 Dyform

A multi-strand rope that provides large diameter high strength rotation resistance ensuring excellent fatigue performance with high strength and lower weight to diameter ratio to aid in deep water operations.

Table 4 Wire Rope Comparison

Rope Type	Winch System	SF*	Rope Diameter (mm)	Minimum Breaking Force (tonnes)	Mass (kg/m)
Hydra 7500 Dyform	Single Part Arrangement	2	88.9	679	39.5
		3	109	1000	57.5
	Two Part Arrangement	2	60	331	18.0
		3	72	471	25.9
	Five Fall Pulley System	2	50.8	241	12.9
		3	50.8	241	12.9
Hydra 5500 Dyform	Single Part Arrangement	2	88.9	630	37.5
		3	109	980	55.5
	Two Part Arrangement	2	58	309	16.8
		3	72	471	25.9
	Five Fall Pulley System	2	40	150	8.0
		3	46	198	10.6
	Seven Fall Pulley System	2	40	150	8
		3	40	150	8

***The safety factor (SF) of the system dictates the diameter and strength required for the rope.**

1.5 Sheave System

The size, location and number of sheaves is dependent on the components of the entire system such as the diameter of the wire rope, the type of winch system, and the type of heave compensation system. The distance of the sheaves from the winch is also dependent on the rope diameter and the width of the winch drum. The tread diameter of the sheave will, in general, be 18 times the rope diameter. The details for the following options may vary slightly depending on the components of the system as well as the line speed required for the winch.

1.5.1 Sheave Option One

Assuming one (1) layer of wire rope spooled onto the winch drum, the sheave system consists of horizontal sheaves and a vertical sheave as depicted in Sketch SK-15-09. The wire rope comes off the winch into two (2) horizontal sheaves and then onto a vertical sheave located on top of the pontoon deck and then down into the moon pool to connect to the GBF. It should be noted that the vertical sheave's location will vary for the multi-fall pulley system winch option.

1.5.2 Sheave Option Two

The sheave system consists of lead in rollers, horizontal sheaves and a vertical sheave as depicted in Sketch SK-15-10. The wire rope comes off the winch onto the lead in rollers and then onto horizontal sheaves. From the horizontal sheaves the wire rope moves onto a vertical sheave, which is located on the deck of the

pontoon, and then down into the moon pool to connect to the GBF. The vertical sheave's location will vary for the multi-fall pulley system winch option.

1.5.3 Sheave Option Three

The sheave system consists of only one (1) vertical sheave as depicted in Sketch SK-15-11. The distance between the winch drum and the vertical sheave is determined by the diameter of the wire rope and the length of the winch drum. Therefore, this option is only feasible with smaller diameter ropes and smaller size drums that allow more wire layers spooled onto the drum.

1.6 Heave Compensation System

A heave compensation system will allow for the safe deployment of the GBF by reducing the relative motion of the GBF with respect to the pontoons. This system will also reduce the possibility of shock loading to the winch and wires. The incorporation of a heave compensation system will increase the precision and control of the GBF during the installation process and will most likely be one (1) of the two (2) types described below. However, it is also possible to use a combination of the two (2) systems which would limit the energy needed as well as increase the control of the GBF.

Incorporation of a heave compensation system into the winch system design has several benefits including increased safety and potentially an increase in the environmental operating conditions (waves).

1.6.1 Active Heave Compensation (AHC)

An AHC unit is similar to any electronic closed-loop control where movement is sensed through motion sensors stationed onboard the vessel, and based on their input, the winch reacts by pulling in or paying out line to keep the suspended load at a constant level.

An AHC works best with a hydraulic system since a hydraulic system can be equipped with a unit that stores hydraulic pressure/energy which reduces the need for additional power. An electric system would be required to generate significantly more power. Also, the speed of the AHC winch will be dependent on the height and frequency of the waves.

1.6.2 Passive Heave Compensation (PHC)

A PHC is similar to shock absorbers on a car or springs in a mattress where it absorbs the heaving motions of the vessel to limit the movement of the suspended load. It is often used in applications where the load is positioned on the seabed, but it can also be used for movement compensation.

A PHC works best with an electric system since it relies on friction. With a hydraulic system, the pressure tends to drop (friction drops) which can create a 10% to 15% error in positioning.

Table 5 Heave Compensation Comparison

System	Description	Advantages	Disadvantages
PHC	Provides simple heaving load limitation by relying on a spring damper that gives way or pulls in to adapt for any increase in load.	› Specifically limits tension load in the wire › Is the safest and most effective with light loads with a large surface area › Relative motion of the load will be reduced › No additional power supply needed › Line-pull is constant No control unit needed	› Requires load with very high resistance against motion › Requires adjustment for actual load and motion › System will always have a greater positional hysteresis › In the worst case it can amplify the motion of the load Limited range of motion
AHC	Provides heaving load limitation by sensing movement electronically and then sending control signals to the winch to pull in or pay out line.	› Motion sensor driven › Elevation of the load is constant Driven by displacements only	› Requires additional power to operate › Requires an additional control unit Increases complexity of the overall system

1.7 Opinion of Probable System Costs

OCC|COWI has contacted winch manufacturers and suppliers to procure cost estimates for the winch system. Based on quotations and information provided by various equipment providers, OCC|COWI prepared an Opinion of Probable Cost (OPC) for the recommended winch system. The OPC is presented in Appendix 3 of the Freshwater Concept Design report.

2 Conclusion

It is recommended that the Freshwater project proceed with an electrically-driven winch with a multi-part pulley system. It is further recommended that a passive heave compensation system be incorporated into the concept design of the winch system.

The deck layout will be dependent upon the size of the wire rope, the width of the winch drum and the minimum offset distance to the first turning sheave. A power pack will also need to be installed on one (1) of the pontoons to supply energy to the winches. The on-deck components will require environmental protection from wave action and other inclement weather occurrences.

MEMO

TITLE	GBF with Penetration Skirt Summary
DATE	Original: May 15, 2013 Modified: January 30, 2014
TO	Project File
COPY	Joseph Marrone, Stanley White, Brent D. Cooper
FROM	Ravi Sharma, Brian Rhett
PROJECT NO	211080.0

ADDRESS Ocean & Coastal Consultants, Inc.
35 Corporate Drive
Suite 1200
Trumbull, CT 06611
USA

TEL +1 203 268 5007
FAX +1 203 268 8821
WWW ocean-coastal.com

1 Introduction

The "Shallow Water Offshore Wind Optimization for the Great Lakes" project is a study of a holistic offshore wind system aimed at optimizing the wind system to achieve at least 25% reduction in cost of energy (COE) for a large scale offshore wind project. Freshwater Wind I, LLC is leading this project along with a team from National Renewable Energy Laboratory (NREL) and OCC|COWI. The project is being funded by Department of Energy (DOE).

Among several focus areas for COE reduction, foundation design and installation methods provide a significant potential for total cost reduction. For this purpose, different foundation concepts are being evaluated.

This report presents an evaluation of the feasibility of the second foundation alternative, a gravity base foundation (GBF) with penetration skirt. Discussion of the first foundation alternative, the semi-floating GBF can be found in the accompanying "Semi Floating GBF Evaluation Summary" memo, (OCC|COWI, 2013), or the "semi-floating GBF memo". The basis of both foundation designs is directed by common criteria, such as water levels, wind, wave and ice conditions, geotechnical conditions and the design turbine. Accordingly, this memo will acknowledge design basis information discussed in the semi-floating GBF memo. However, the full context of this information will not be repeated here.

The GBF with penetration skirt, shown in Figure 1-1 below, is comprised of a hollow, circular reinforced and stiffened concrete base (skirt) combined with a taper section, column, ice cone and service platform similar to the semi-floating GBF. The GBF-skirt is expected to penetrate through the soft sediment at the lakebed and will be founded on the bottom stiff clay layer. The plugged soil between the skirt walls will be treated in-situ to increase the bearing capacity and reduce the consolidation/settlement potential using pre-installed grout lines on the skirt wall. The presence of the skirt system thus eliminates the need for dredging and lakebed preparation typically required for other GBF concepts.

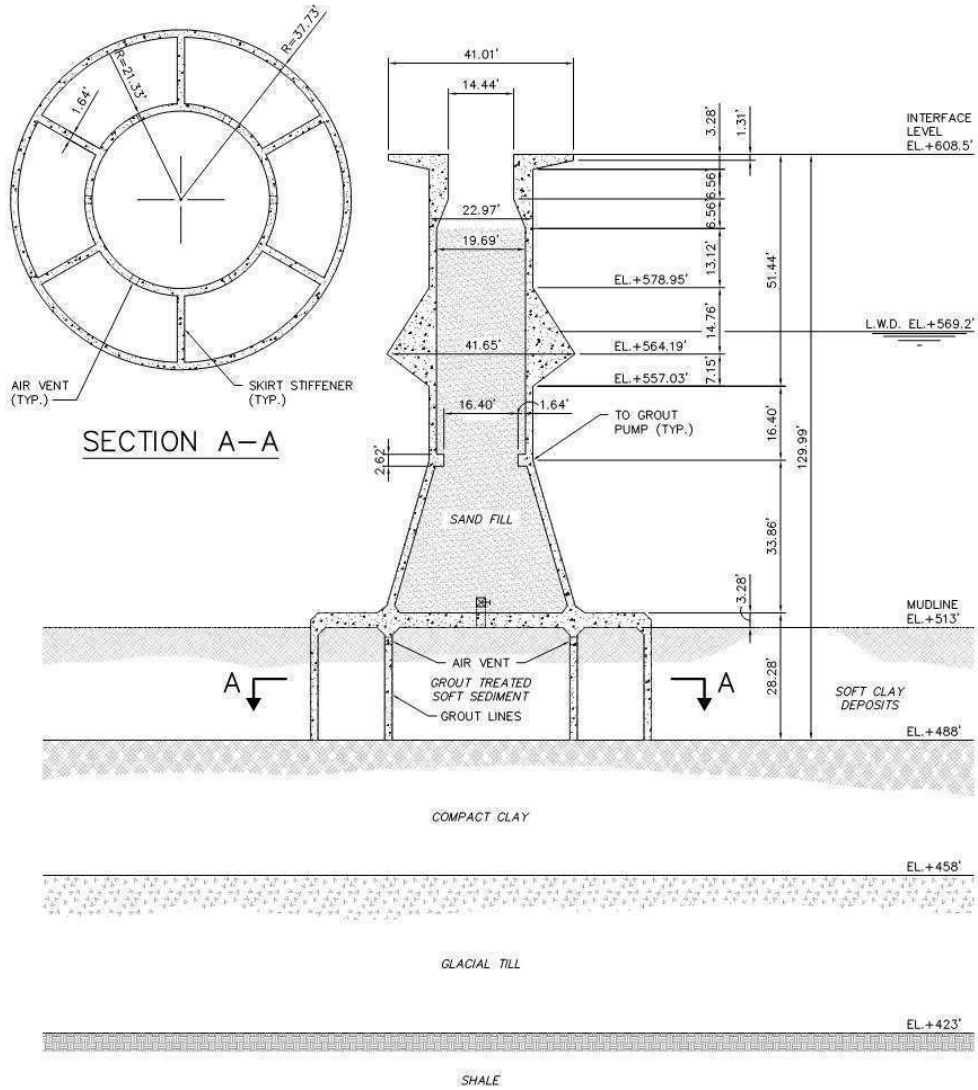

Figure 1-1: GBF with Penetration Skirt, Cross Section

2 Design Basis

The design is based on a typical seabed elevation and NREL's 5.0 MW wind turbine. The chosen study/project area is approximately 11km (7 miles) off of Cleveland, OH in Lake Erie in the Great Lakes. The average water depth in the study area is 20m (66 ft).

2.1 Codes and Standards

The concept evaluation is based on DNV Standard DNV-OS-J101.

2.2 Vertical Datum

The GBF with penetration skirt is based on the same vertical datum as the semi-floating GBF. The water depths reported in this document are made reference to in the Chart Datum of Lake Erie.

2.3 Hydrographic Design Parameters

Table 2-1 summarizes the water level and wave parameters from Marschall et al., 2008, utilized in the GBF design.

Table 2-1 Overview of Hydrographical Data

Parameter	Symbol	USC units	SI units
Seabed level (chart datum)	Z_{seabed}	-65.6 ft	-20 m
50 year water level variation (surge)		+ 7.9 ft	+ 2.4 m
Design still water level	Z_{SWL}	+ 7.9 ft	+2.4 m
Water depth	h	73.5 ft	22.4 m
Maximum wave height- 50 year	H_{max}	25.6 ft	7.8 m
Period of max. wave	T_{Hmax}	9.2 sec	9.2 sec
Co-directional current (Verber, 1953)	U_c	0.66 ft/s	0.2 m/s

The maximum wave height is not limited by water depth, hence, wave breaking effects are not considered in this study.

2.4 Concept Design Approach

Only the Ultimate Limit State (ULS) load case has been considered in this study based on the assumption that foundation dimension/weight will be governed by ULS load conditions. However, it should be noted that Fatigue Limit States (FLS) and Serviceability Limit States (SLS) considerations will also be equally important for detailed design. Transport and installation loads were not considered in this concept design. The following loads are considered or calculated for this study.

2.5 Interface Loads

The gravity base foundation is designed for loads from NREL 5.0 MW wind turbine. The main dimensions and preliminary design interface loads are given in Table 2-2 (NREL, 2007).

Table 2-2: ULS Design Wind Turbine Loads (including load factors) at Interface Level Between Tower and Foundation

Parameter	SI Units	NREL 5.0 MW WTG
Horizontal load	MN	1.9
Overturning moment	MNm	158.4
Torsion in shaft	MNm	12.3
Weight of turbine + tower	MN	10.5

2.6 Turbine Geometry

The NREL turbine specification indicates the design hub height is equal to 90m and the tower length is 87.6m (287 ft). The loads provided are with respect to the base of the tower (NREL, 2007). The interface elevation of the foundation and tower was determined to be +12.0m (+39 ft) as discussed below. OCC|COWI converted the loads provided by NREL in Table 2-2 for the Freshwater interface elevation. Main Turbine Dimensions used for this design are found in Table 2-3 below.

Table 2-3: Main Turbine Dimensions

Parameter	SI Units	NREL 5.0 MW WTG
Hub height level	m CD	+ 90
Service platform level / Interface Elevation	m CD	+ 12.0
Tower bottom diameter	m	6.0

2.7 Waves and Current Loads

Loads due to waves and currents are common between GBF alternatives. They are more fully discussed in the semi-floating GBF memo.

Based on site conditions, the interface elevation is assumed at +12.0m (+39 ft) above CD to avoid wave slamming forces on the service platform. The interface elevation is determined based on design still water level plus wave crest height plus a conservative free board allowance.

Table 2-4 shows the main parameters and the characteristic (i.e. load factor = 1.0) horizontal forces and overturning moment caused by wave and current.

Table 2-4 Characteristic ULS Wave and Current Loads Acting on the Gravity Base Foundation

Parameter	SI Units	Value
Lakebed level	m CD	- 20.0
Foundation level	m CD	-27.6
Characteristic horizontal force at foundation level	MN	4.0
Characteristic overturning moment at foundation level	MNm	83.0

2.8 Ice Loads

Lake Erie is subject to the formation of freshwater lake ice and ridges during the winter months. Though the lake ice coverage is not observed every year, it occurs frequently enough to warrant ice load consideration in the design. Ice loads are similar between foundation alternatives. Select ice parameters have been reproduced below in Table 2-5; a more complete discussion is found in the semi-floating GBF memo.

Table 2-5 Freshwater Ice Properties and Characteristic Ice Loads on the Gravity Base Foundation

Property	Value	Source
Density (kg/cu.m)	900	DNV-OS- J101, 2011
Ice-concrete dynamic frictional coefficient	0.2	DNV-OS- J101, 2011
Compressive strength (MPa)	2.5	Marschall et al., 2008
Flexural Strength (MPa)	0.75	Marschall et al., 2008
Level ice thickness (m)	0.5	Marschall et al., 2008
Consolidated ice layer thickness (m)	0.87	C-Core, 2008
Sail thickness (m)	0.6	Marschall et al., 2008
Keel thickness (m)	11.2	C-Core, 2008
Horizontal ice force (MN)	1.6	DNV-OS- J101, 2011
Vertical ice force (MN)	0.7	DNV-OS- J101, 2011
Horizontal ridge ice force (MN)	3.0	Brown and Seify, 2005

This design assumes that fast ice will not form on the structures although it is possible that fast ice may form on the structures, thus increasing the effective cross sectional area and surface roughness. This, in turn, will increase the wind and hydrodynamic loads on the structures (including turbine and tower). The possibility for increasing these loads shall be considered in the detailed design.

It is noted that the calculated horizontal ridge ice force on the gravity base structure is less than the horizontal force due to wave and current loads. Therefore, the design is governed by wave and current loads.

2.9 Combined Loads

From the above loads the combined wind, wave and current design loads at foundation level have been calculated and presented in Table 2-6. The design loads are inclusive of a load factor of 1.35 on moments and horizontal loads, and a load factor of 1.0 on vertical loads.

Table 2-6 Combined ULS wind, wave and current design loads at foundation level

Parameter	Value (SI)	Value (US Customary)
Lakebed level	- 20.0m CD	-66 ft CD
Foundation level	- 27.6m CD	-90 ft CD
Horizontal design load	7.3 MN	1640 kips
Overturning design moment	345.7 MNm	254,900 ft-kips
Design torsion	12.3 MNm	9,070 ft-kips
Vertical interface load	10.5 MN	2360 kips

3 Geotechnical Evaluation

3.1 Soil Conditions

The seabed level at the proposed wind farm site is approximately -20.0m (-66 ft) CD. There is no site-specific geotechnical data available. Both foundation alternatives are based on conditions determined in a geotechnical investigation campaign conducted in 1973, off of Cleveland, OH, in Lake Erie. The interpreted soil profile and parameters used in this study is presented in Table 3-1. Geotechnical conditions are more fully discussed in the semi-floating GBF memo.

Table 3-1 Overview of Soil Layers and Parameters

Layer	Top of layer below mudline, m (ft)	Bottom of layer below mudline, m (ft)	Layer thickness, m (ft)	Description	Unit Weight, kN/m^3, (pcf)	Effective friction angle, deg	Undrained shear strength, kPa (psf)
1	0.0	7.6 (25)	7.6 (25)	Soft clay	16.8 (107)	-	S_u=150+10(z) in psf where z is in feet S_u=7.18+1.57(z) in kPa Where z is in meter
2	7.62 (25)	27.4 (90)	19.8 (65)	Stiff clay	20 (127)	-	81.4 (1700)

It should be noted that the chosen soil profile and engineering properties may not be representative of the proposed wind farm site and there may be significant variation in soil strength parameters. A detailed geotechnical study will be required in the future for preliminary and detailed foundation design.

3.2 Bearing and Sliding Capacity Calculations

Bearing and sliding capacities of the gravity base foundation have been calculated as per DNV using the combined loads described above.

The gravity base foundation considered is a hollow circular concrete foundation having concrete skirts around the outer circumference, a central inner concrete skirt and stiffeners connecting the outer and central skirts. The skirts and stiffeners are connected at the top by a base slab. Above the base slab, the GBF resembles the semi-floating GBF design, with a similar taper section, column section and a combined (normal and inverted cone) ice cone at the lake surface level. The foundation sketch is attached at the end of this memo.

During installation, the GBF skirt is assumed to penetrate through the soft sediment at the lakebed and will be founded on the bottom stiff clay layer. The plugged soil between the skirt walls will be improved in-situ to increase the bearing capacity and reduce the consolidation/settlement potential using the pre-installed grout lines on the skirt wall.

Since the penetration depth of the skirt is relatively deep, the skin friction and end bearing capacity of both inner and outer skirt walls, including stiffener walls, is expected to contribute significantly to the overall stability of the foundation. The conventional bearing capacity theory has not been used to assess the geotechnical stability because the classical theory does not address the influence of deep penetrated skirt in the bearing capacity of shallow foundation.

Rather, the geotechnical stability (Bearing, overturning and sliding) of the gravity base foundation with penetration skirt subjected to combined vertical-horizontal-moment (VHM) loadings has been assessed using Plaxis, a geotechnical finite element software program. The purpose of the finite element analysis was to evaluate the behavior of the skirt foundation system and to identify the critical failure mode within the soil. The foundation skirt was modeled as a 2D structure with the base slab resting on the lakebed and the skirt walls penetrated through the soft clay layer and resting on the bottom stiff clay layer.

The two (2)-layer soil profile and parameters shown in Table 3-1 was used in the Plaxis model. The strength increase due to post installation grouting is ignored in the assessment.

The gravity load (V) on the foundation included the weight of foundation with skirt, ballast weight, and the weight of tower and turbine. The horizontal load and moment was varied to develop a failure envelope (interaction diagram) in H-M space for constant V. The interaction diagram is shown in Figure 3-1.

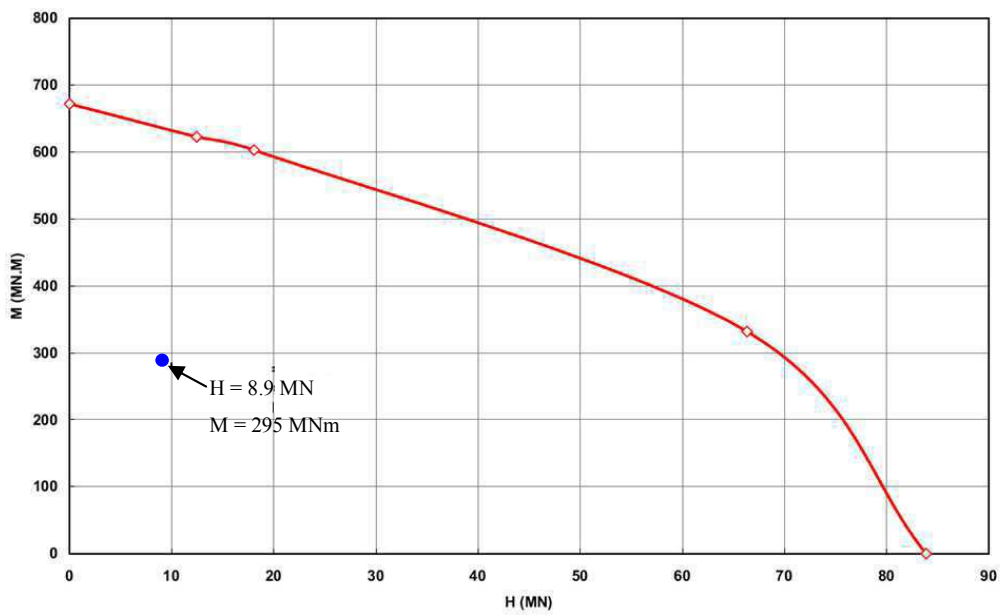

Figure 3-1 Foundation Bearing Capacity Failure Envelope. H-M interaction Diagram for Constant V = 50.7 MN

Based on the interaction diagram, it can be seen that the combined H-M loads are well within the failure envelope and the factor of safety to failure is greater than two (2).

Further, the modeling results suggest that due to the soil plugs between the skirts (inside the inner skirt walls and between inner and outer walls), the bearing capacity can be assessed assuming a closed-end condition, using classical bearing capacity theory.

3.3 Installation Resistance

Penetration resistance during installation has been calculated from the skin and end resistance acting on the skirt wall including stiffener skirts, following the procedure outlined in Offshore Geotechnical Engineering (Randolph and Gourvenec, 2011). In this calculation, ranges of values for soil strength and sensitivity have been considered to account for the lack of reliable soil information and expected in-homogeneity in the soil profile. The unit skin friction for the clayey soil is considered to be proportional to the product of undrained shear strength and adhesion factor (assumed to be inversely proportional to soil sensitivity). The end bearing capacity factor (Nc) for the clayey soil is assumed to be equal to 7.5.

It is assumed that the layer thickness and unit weight for each layer are as mentioned in Table 3-1. The highest expected and most probable values for undrained shear strength (at mid depth for top layer) and soil sensitivity assumed in this study are provided in Table 3-2. The assumed sensitivity value (2-3) corresponds to typical normally consolidated clay. Further, for the top clay layer, it is assumed that the highest expected and most probable sensitivity value is two (2), which is conservative from the penetration resistance point of view.

Table 3-2 Ranges of Soil Strength Parameters Considered

Layer	Undrained Shear Strength, kPa (psf)		Adhesion Factor (1/Sensitivity)	
	Highest expected	Most probable	Highest expected	Most probable
1	25 (522)	13 (275)	0.5	0.5*
2	120 (2506)	80 (1670)	0.5	0.33

***The difference between remolded and intact strength for low strength clays is most likely to be less, so upper bound value is assumed as most probable value.**

Penetration resistance with depth has been calculated for highest expected and most probable values and compared with submerged weight of the structure during installation and design vertical load (ULS). Installation weight has been calculated assuming that the structure will be ballasted with water during installation and for the design vertical load it is assumed that the structure will be ballasted with sand having unit weight equal to 20 kN/m^3 (127 PCF).

From Figure 3-2, it can be seen that for the most probable condition, the structure will penetrate the soft clay layer completely with its self-weight (with water ballasting) and the bearing capacity of the underlying glacial sediment is sufficient to support the design vertical load (ULS). However, for the case of highest expected strength, self-weight (with water ballasting) penetration is limited to an approximate depth of 4m (13 ft) and thus, requires either suction-assisted penetration or ballasting with sand.

In case of suction-assisted penetration, a suction pressure in the order of 50 kPa (7.25 PSI), which is less than the cavitation pressure, will be required to further penetrate the GBF to found the skirt on the stiff clay. Ballasting the GBF with sand can also help overcome the penetration resistance. Either way, it is possible to penetrate the soft layer and mobilize the higher bearing capacity of the underlying stiff clay to support the design vertical loads.

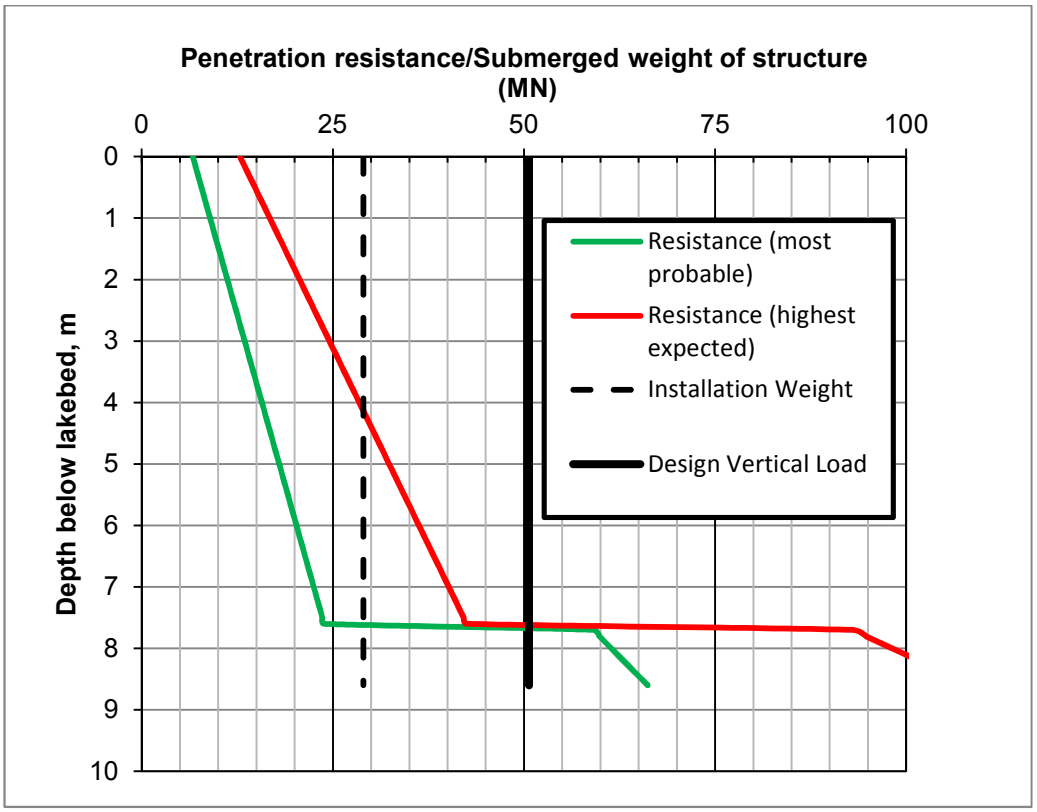

Figure 3-2 Penetration Resistance of GBF-Skirt

With respect to the installation tolerance for the foundation, it is assumed, at this concept stage, that the tilt can be limited and/or eliminated with an appropriate installation procedure. The detailed design will address issues related to the non-uniform layer thickness of the top soft clay layer, undulating elevation of the bottom stiff clay layer, potential differential settlement of the foundation and interaction of the base slab at the mudline during installation.

The calculated main concrete dimensions of the GBF-skirt foundation are listed in Table 3-3.

Table 3-3 Main GBF Dimensions and Volumes

Parameter	Units
Design lakebed level	- 20.0 m CD
Tip level of the skirt	- 27.6 m CD
Diameter of base slab	23.0 m
Volume of concrete	1654 m^3
Top of fill level	+ 7.0 m CD

The influence of GBF lakebed landing/landing velocity is not considered in this study. Nevertheless, sufficient areas for escape of water/air will need to be provided in the central skirt wall and base slab (valve controlled) to limit hydrodynamic forces and loss of bearing capacity of the sediment.

The effect of consolidation settlement and cyclic degradation of the sediment on the gravity base foundation is not evaluated in this study.

3.4 In-situ Ground Improvement

Although the GBF-skirt will penetrate the soft sediment to found on the stiff glacial sediment, the soft sediment is likely to pose additional unfavorable issues for the foundation design. The issues may include down drag forces (negative skin friction), heave, and non-uniform soil stresses across foundation base, etc.

In order to overcome the above, it is recommended to treat/improve the soft sediments plugged within the skirt wall (soils inside the central skirt and in between outer and inner skirt) including the sub-base material (stiff clay) below the GBF. To facilitate in-situ treatment, it is recommended to provide pre-installed grout lines along the skirt wall. These grout lines can be used to inject a suitable grout which will be designed based on the physical and engineering properties of the sediment. The target strength and stiffness of the treated soil will be determined during preliminary and detailed design. Nevertheless, any small increase in strength and stiffness of the soft sediment will significantly improve the performance of the GBF-skirt foundation.

3.5 Foundation - Soil Stiffness

The minimum required rotational spring stiffness of the soil-foundation for NREL 5.0 MW WTG is not provided by the turbine manufacturer. In general, the requirement is on the order of 20,000 to50,000 MNm/radian depending on the turbine.

Given the unavailability of the site-specific soil profile and strength information as well as the stiffness requirement from the turbine manufacturer, a rough estimate of rotational spring stiffness was carried out for a range of undrained shear strength for the bottom glacial sediment. It was found that the rotational spring stiffness for the soil-foundation system is sufficient (>200,000 MNm/radian) with the expected soil conditions.

4 Structural Analysis

4.1 Analysis

Due to complicated interfaces between elements in the proposed gravity base foundation, the Bentley Systems STAAD.Pro V8i finite-element program was used to

complete the structural analysis of the GBF. Initial concrete thicknesses were based on previous, similar COWI projects. Additionally, where possible, classical methods of analysis were used to validate the finite-element results.

4.2 Finite-Element Model

A STAAD model consisting of plate elements was built to reflect the geometry of the proposed foundation design; few deviations were made from the design geometry, and all deviations were conservative in nature. A skeleton frame of the model can be seen below in Figure 4-1. The typical thickness of the concrete plates was 0.5m (1.6 ft). Thicker concrete sections were modeled at the horizontal plate level and other high stress locations. The bottom of the foundation was assumed to have a fixed connection under the mudline. Neither post-tensioned strands nor steel reinforcement were considered in the model.

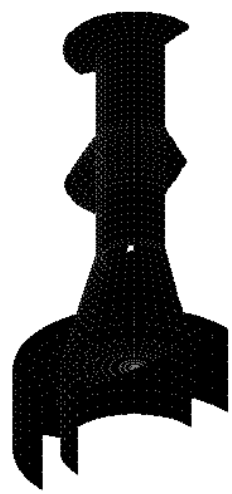

Figure 4-1: Frame Model of Foundation

The combined factored loads listed in Table 2-4 were applied to the model. These loads incorporate the critical wind, wave, and turbine loadings. In addition to these loads, hydrostatic and assumed soil pressures (see Table 3-1 above) were simulated. Ultimate limit states were also checked under a worst-case ice loading scenario. The model reflects extreme case loadings that can be expected once the foundation and wind turbine have been installed. Finite-element analysis was used to establish the maximum stresses and forces that would be generated from the critical loading scenario. An output from the program demonstrating the maximum tensile forces is seen below in Figure 4-2

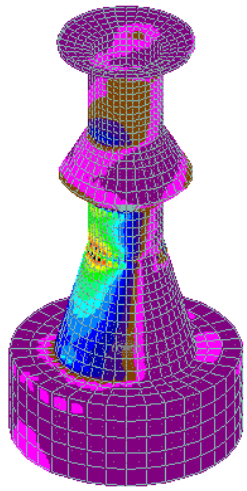

Figure 4-2: Maximum Tensile Forces, GBF with Penetration Skirt

Post analysis of the model showed that the highest stress concentrations were produced from the combined factored turbine, wave and current loads. The finite element analysis indicated that post-tensioning of the concrete (both meridional and circumferential) would be required. A simplified analysis was completed to determine approximate post-tensioning requirements. The analysis included a comparison to similar COWI GBF designs and typical post-tensioning design requirements. Based on this limited assessment, approximately 20 kg of Grade 1860 MPa post-tensioning will be required per cubic meter of concrete. Based on previous experience with similar foundation designs, roughly 200 kg of Grade 500 steel reinforcement will likely be required per cubic meter of concrete. Based on preliminary analysis, this gravity base foundation design can withstand the identified critical loads as long as sufficient meridional and circumferential post-tensioning is applied.

5 Quantities

The concrete and ballast quantities for the gravity base foundation are presented in Table 5-1.

Table 5-1 Estimated quantities

Parameter	U.S. Customary Units	SI Units
Concrete volume	1654 m^3	2,163 yd^3
Ballast volume (sand)	1096 m^3	1,434 yd^3

6 Other Considerations

6.1 Scour Protection

Given the presence of soft cohesive sediment and insignificant current at the lake bed, it is unlikely for scour to occur around the gravity base foundation. However, rubble/gravel protection adjacent to the foundation may be provided to increase overburden pressure to improve soil bearing capacity, if necessary, during detailed design.

6.2 Filter Criteria for Gravel Bed

In this concept, it is assumed that the foundation will penetrate through the soft clay layer and will be founded on the bottom stiff clay layer, thus, no gravel bed is required.

6.3 Integrated Load Calculation

For the detailed design, it is assumed that a global load model will be established (by the wind turbine manufacturer) in order to carry out an integrated calculation of wind, ice or wave and current loads.

It is possible that such calculation will result in slightly lower loads than what has been assumed for this concept evaluation.

7 References

Brown, T.G. and Seify, M.El., *A Unified Model for Rubble Ice Load and Behavior*, Final Report, National Research Council of Canada, Report No. PERD/CHC 5-119, December 2005.

Dames and Moore, *Lake Bottom Geotechnical and Geophysical Studies*, Reports No. 5-1 & 5-2, May 1974.

Design of Offshore Wind Turbine Structures, Offshore Standard, DNV-OS- J101, 2011.

Dynamics Modeling and Loads Analysis of an Offshore Floating Wind Turbine, Technical Report, NREL/TP-500-41958, November 2007.

Ice Loads on Wind Turbine Structures in Lake Erie, C-Core Final Report, R-08-014-566, November 2008.

Marschall, et al, Prepared by, *Final Feasibility Report, Great Lakes Wind Energy Center Feasibility Study* submitted to Cuyahoga County, April 2008.

Randolph, M and Gourvenec, S. "Offshore Geotechnical Engineering", Text Book, 2011.

Verber, James, *Surface Water Movement, Western Lake Erie*, The Ohio Journal of Science, 53(1):42, January 1953.

MEMO

TITLE	GBF and Tower Integrated Concept Design Summary
DATE	Original Date: November 25, 2013 Modified Date: February 3, 2014
TO	Project File
COPY	Stanley White, Joe Marrone, Brent Cooper
FROM	Leah G. DeLeon
PROJECT NO	211080.0

ADDRESS Ocean & Coastal Consultants, Inc.
35 Corporate Drive
Suite 1200
Trumbull, CT 06611
USA

TEL +1 203 268 5007
FAX +1 203 268 8821
WWW ocean-coastal.com

OCC has been tasked with preparing the conceptual design of an innovative installation program for the semi-floating gravity based foundation (GBF) proposed for the "Shallow Water Offshore Wind System Optimization for the Great Lakes" (Freshwater) project. Associated concept summaries have discussed design, assembly and transport of semi-floating GBFs via supplemental floatation (pontoons). The alternative concept described herein builds on the assembly and installation methods previously discussed by incorporating near-shore installation of the turbine tower to the GBF assembly prior to transporting the foundation offshore.

GBF with Integrated Tower Concept

GBFs are fabricated and launched from the fabrication yard facility (Regional Justification for Fabrication Facility, 2012), and will be transported using supplemental flotation (Supplemental Floatation Summary, 2013) to an in-water staging area. According to the construction schedule, the GBF is then transported to a secondary pierside assembly area where a turbine tower will be installed on the foundation using land-based equipment; electrical equipment will be commissioned to the extent possible. The GBF/tower assembly will then be transported offshore to the project site using a specialized barge, modified to support the GBF and integrated tower.

Design Process

This section discusses the buoyancy and stability calculations involved in modifying the transport and assembly systems to include the turbine tower. During the concept development process, OCC|COWI analyzed three (3) scenarios, each with an accompanying set of stability calculations. Each set of calculations served to identify supplemental floatation requirements for floatation and ultimately static stability under tow. The first scenario holds barge plan surface area constant. The second scenario explores the feasibility of a 23m (75ft) beam restriction, such that the system could navigate the Welland Canal and be implemented in Lake Ontario. The third scenario

ultimately determines barge dimensions required to achieve minimum longitudinal and transverse stability specified by the Code of Federal Regulations (CFR) for the Great Lakes (CFR 46, 2002). Results of these calculations were analyzed to optimize dimensions of the barge concept proposed to float the integrated tower/GBF to the project site.

Summary of Calculations

This section discusses each stability calculation set individually describing assumptions, calculation procedures, and results.

General Assumptions

All calculations assume a semi-floating GBF with a 5m (16ft) tall buoyancy chamber, and a rectangular barge with vertical (non-raked) ends. The barge molded depth is held constant at 3.7m (12ft) due to draft constraints. The barge's notch (rectangular slot located at the bow of the vessel) is taken into consideration when calculating the barge waterplane moment of inertia.

The turbine tower weight and height is based on NREL's definition of a 5MW Wind Turbine (Jonkman et al., 2009). Note that calculations reference NREL's tower properties for weight and height; however, due to the foundation/tower interface elevation determined for Freshwater, in order to reach the NREL optimized nacelle height, the turbine tower will be shorter and weigh less. The calculations are thus conservative in this respect. For this analysis, turbine tower weight is also conservatively assumed to be evenly distributed vertically. The tower is modeled cylindrically, when in reality the tower will taper from the nacelle to the GBF.

The weight of the collared support structure is estimated as 200 metric tonnes (220 tons). Barge self-weight includes fixed machinery and appurtenances such as winches and a steel tower support structure fitted with hydraulic collar. It is assumed that generators will be located on a collocated vessel, independent of the system described herein. Transverse stability in foot-degrees (meter-degrees) is determined in each set of calculations, assuming that the vessel is wall-sided (Rawson & Tupper, 1983). Variable assumptions are listed below for each respective approach.

For the purposes of this report, barge "plan area" refers to the barge beam * length overall (LOA). This value varies from the barge "waterplane area", as barge waterplane area changes as the vessel heels. "System waterplane area" values include the horizontal sectional area of all components of the system through which the waterline (lake surface) intersect. The system waterplane area is used to determine the system's waterplane moment of inertia in the transverse and longitudinal directions.

Initial Floatation and Static Stability Calculations

The objective of these initial calculations is to identify the system's sensitivity to change in beam while maintaining a constant minimum supplemental floatation (barge plan area*draft). Results are expressed in tabular and graphical form, demonstrating the change in barge LOA, transverse stability, and longitudinal stability for varying barge beams.

Calculation Procedure:

1 Identify barge loading including GBF, barge self-weight, tower support structure, and winches.
2 Determine the barge plan area required to float the GBF (for a 5m GBF buoyancy chamber height and constant barge draft).
3 Calculate metacentric heights for varying dimension alternatives.
4 Depict graphically the change in LOA, transverse metacentric height, and longitudinal metacentric height as barge beam varies.

Assumptions:

- Barge plan area is held constant, once required area for floatation is obtained.
- Estimated barge self-weight is determined using an iterative process, assuming a light-ship draft of 0.7m (2.3ft) and a constant barge plan area.
- It is assumed that the barge maintains 1m (3.3ft) of reserve buoyancy in the tow position.

Results:

Calculations yield a minimum barge plan area of 1371 m^2 (14,750 ft^2) required for floatation. Maintaining this rectangular area, the system reaches a positive transverse metacentric height (GM_{YY}) with a beam of 30m (98ft) and a LOA of 46m (151ft). As the barge beam approaches the barge LOA, longitudinal and transverse metacentric heights are approximately equal. The relationship between beam and corresponding changes in LOA and stability is shown in Figure 1.

Table 1: Minimum barge plan area required for floatation.

Minimum Barge Plan Area Required for Floatation				
Parameter	**Metric**		**US**	
Barge Self Weight	852	tonnes	937	tons
Light Draft	0.76	m	2.5	ft
Notch Area	253.5	m^2	2728	ft^2
Density of Freshwater	1	t/m^3	62.4	lb/ft^3
Barge Depth	3.7	m	12.1	ft
Required Barge Plan Area	1118	m^2	12030	ft^3
Rectangular Barge Plan Area (Including Notch Area)	**1371**	**m^2**	**14752**	**ft^2**

Table 2: Resulting LOA, longitudinal stability, and transverse stability as beam increases (metric units).

System Sensitivity to Change in Beam (Metric Units)			
Barge Dimensions		**Metacentric Heights**	
Beam (m)	**LOA (m)**	**Longitudinal Stability GM_{XX} (m)**	**Transverse Stability GM_{YY} (m)**
26	53	25.66	-3.59
28	50	21.76	-1.57
30	46	16.08	0.41
32	44	13.92	2.78
34	41	10.12	5.07
36	39	7.93	7.64
38	37	5.74	10.32
40	35	3.59	13.07

Table 3: Resulting LOA, longitudinal stability, and transverse stability as beam increases (US standard units).

System Sensitivity to Change in Beam (US Units)			
Barge Dimensions		**Metacentric Heights**	
Beam (ft)	**LOA (ft)**	**Longitudinal Stability GM_{XX} (ft)**	**Transverse Stability GM_{YY} (ft)**
85	174	84.15	-11.78
92	164	71.38	-5.15
98	151	52.75	1.35
105	144	45.66	9.12
112	134	33.19	16.62
118	128	26.00	25.07
125	121	18.84	33.84
131	115	11.78	42.87

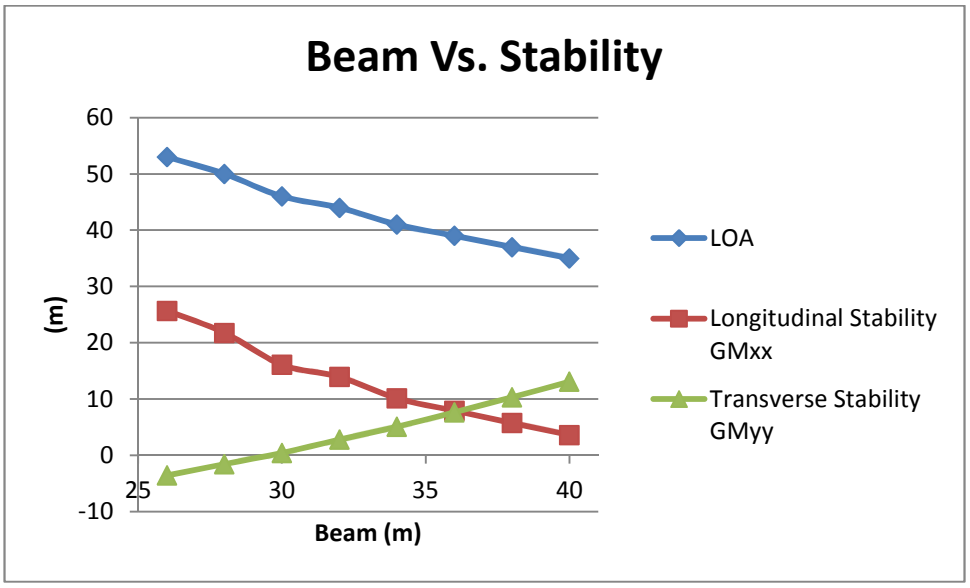

Figure 1: Graph depicting the relationship between beam and corresponding changes in LOA and stability (metric units).

Beam Limiting (23m) Calculations

The objective of these calculations is to define the barge LOA required to achieve a positive metacentric height while maintaining a barge beam of 23m (75ft). Achieving

adequate stability, while maintaining a 23m (75ft) beam, could potentially allow the GBF/barge system to pass through the Welland Canal freely, allowing access to all five Great Lakes. The goal of this analysis is to determine a minimum required barge LOA, and evaluate the feasibility of that vessel.

Calculation Procedure:

1. A preliminary barge parameter table is set up to generate possible dimensions, starting with dimensions considered in the first scenario.
2. A barge plan area to barge self-weight ratio is derived from the first scenario. This value is used to incrementally increase the estimated barge self-weights as barge plan area increases for each case.
3. Each barge parameter is run through the initial floatation and stability calculations procedures for determining metacentric heights.
4. Barge LOA is increased until a positive metacentric height is achieved.
5. The resulting barge dimensions are considered for constructability, maneuverability, and overall feasibility (Table 4).

Assumptions:

- Barge plan area is variable. Beam is held constant; LOA increases as needed to achieve stability.
- Barge self-weight is estimated based on a previously determined ratio of barge plan area to self-weight which is assumed to be constant as barge plan area increases.
- It is assumed that the barge maintains minimum 1m (3.3ft) of reserve buoyancy in the tow position. This is a conservative assumption, as reserve buoyancy will increase as LOA increases.

Results:

The minimum LOA required to achieve a positive transverse metacentric height, while maintaining a 23m (75ft) beam, is 236m (774ft). While there are vessels that navigate the Great Lakes with lengths of 305m (1000ft), a vessel of these dimensions would prove difficult to navigate within the harbor and difficult to accommodate pier-side during tower installation.

Table 4: Minimum LOA required to achieve positive transverse metacentric height (metric, US standard units).

Minimum LOA Required to Achieve Positive Transverse Metacentric Height				
Parameter	**Metric Units**		**US Units**	
LOA	**236**	**m**	**774**	**ft**
Beam	23	m	76	ft
Volume	17378.94	m^3	613719.89	ft^3
KM_{XX}	1349.37	m	4425.94	ft
KM_{YY}	13.62	m	44.67	ft
GM_{XX}	1335.76	m	4381.29	ft
GM_{YY}	**0.01**	**m**	**0.03**	**ft**

Final Stability Calculations

The objective of these calculations is to define the barge LOA and beam required to achieve minimum intact transverse stability per CFR (CFR 46, 2002), using a 3:1 LOA to beam ratio. Previous calculations limit the barge beam or overall barge plan area. While these calculations are important exercises in determining the system sensitivity to dimensional restrictions, they ultimately demonstrate that the barge system needs to be expanded by both length and width to achieve 15 ft*degrees (4.6 m*degrees) of intact transverse stability. The results of the following calculations are expressed graphically, and yield an optimized barge concept (Figure 2).

Calculation Procedure:

1 Previous calculations assume 1m of reserve buoyancy. As this calculation requires that the barge plan area be expanded to achieve stability, reserve buoyancy is variable. Reserve buoyancy is calculated based on barge plan area and loading.

2 The submerged volume of the tapered section of the GBF varies depending on the loaded draft of the barge. The tapered section is modeled as a conical frustum and the submerged volume of the tapered section is adjusted to account for this variation.

3 Geometric centroid of the submerged volume of the tapered section is also calculated, and is later used to determine the vertical center of buoyancy for the tapered section. This value is also a function of the barge draft.

4 The metacentric height calculation procedure (used in previous calculation models) is modified to include the adjusted center of buoyancy, and submerged volume calculated for the tapered section of the GBF.

5 Overtopping angles for both transverse and longitudinal rotation are calculated.

6 Righting arm values are approximated using the Wall-sided Formula (Rawson & Tupper, 1983).

7 Stability curves are plotted (righting arm vs. angle of heel) and the area under the curve to the maximum angle of heel is used to approximate the vessel's stability (Figure 2).

8 Beam values are run through the calculations above until required intact transverse stability is achieved. (Minimum transverse, as opposed to longitudinal, stability was found to govern the design.)

9 It was noted during the first-iteration (35m (115ft) beam by 105m (344ft) LOA) that as the vessel heels to the calculated overtopping angle, the bottom of the vessel on the opposing transverse end emerges from the water. The angle at which the bottom of the barge leaves the water is defined as the "angle of emergence".

10 The previously calculated waterplane area moments of inertia remain approximately the same as the system heels to the angle of emergence. Beyond this angle, waterplane area is substantially reduced as the vessel lifts from the water surface. As such, two (2) test scenarios are implemented to approximate system static stability.

11 Test I determines a given system's angle of emergence and graphs righting arm vs. angle of heel, using the angle of emergence as the max angle of heel.

12 Test II assumes the vessel's maximum angle of heel is equal to the vessel overtopping angle. As such, the system waterplane area (and subsequent waterplane moments of inertia) is re-calculated for the system at the overtopping angle. A horizontal sectional area of all components of the system through which the waterline intersect is approximated to determine new moments of inertia. A stability curve is graphed (righting arm vs. angle of heel), using the vessel overtopping angle as the maximum angle of heel.

Assumptions:

- Barge plan area is variable. Beam and LOA increase as needed to achieve stability.
- Barge self-weight is estimated based on a previously determined ratio of barge plan area to self-weight which is assumed to be constant as barge plan area increases.
- It is assumed that the barge is wall-sided.
- The side slope of the immersed GBF is assumed to taper at a 3:1 ratio.
- Beam and LOA remain approximately equal as vessel heels, assuming a small angle of heel and relatively large lengths.

Results:

The calculations described above yield a barge 35m (115ft) wide by 105m (344ft) long. Intact transverse stability for a barge of these dimensions comes close to CFR-recommended stability of 4.6m*degrees (15ft*degrees) for Test I conditions (where max angle of heel = angle of emergence) however Test II results exceed CFR recommendations for intact transverse stability.

Table 5: Basic barge dimensions required to achieve desired intact transverse stability (metric, US standard units). Test I conditions, angle of heel = angle of emergence.

Approximate Barge Parameters Required for Stability **Test I Results**				
Parameter	**Metric Units**		**US Units**	
LOA	105	m	344	Ft
Beam	35	m	115	Ft
GM_{XX}	499	m	1640	Ft
GM_{YY}	47	m	155	Ft
Stability	**4.3**	**m*degrees**	**14**	**ft*degrees**

Figure 2: Graph of partial transverse stability curve; righting arm vs. barge angle of heel (metric units) for barge LOA of 105 meters. Test I conditions, angle of heel = angle of emergence.

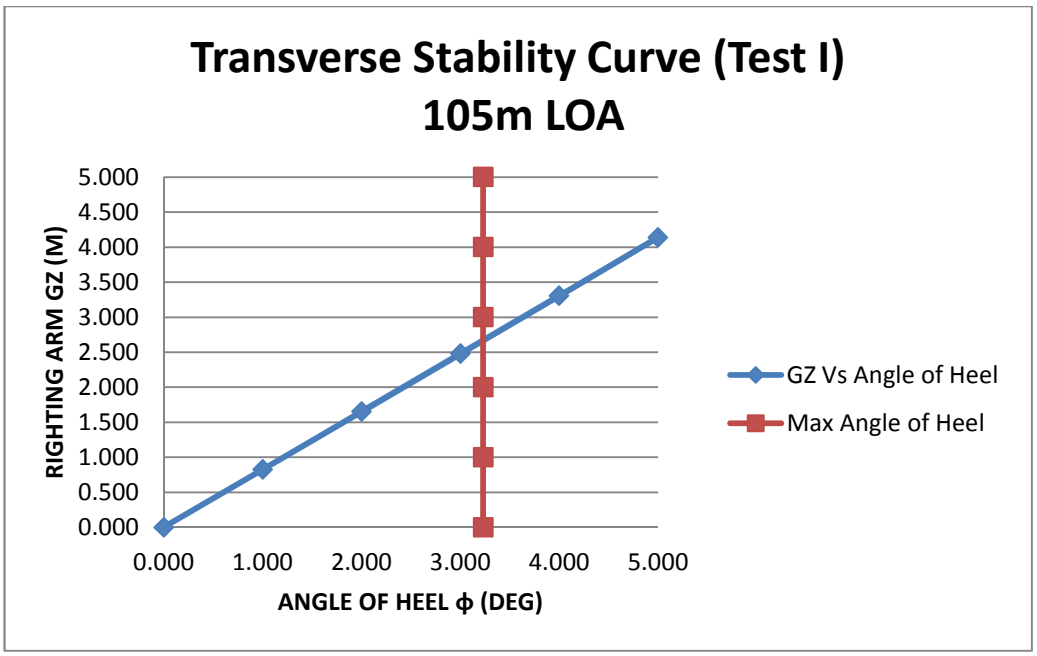

Table 6: Basic barge dimensions required to achieve desired intact transverse stability (metric, US standard units). Test II conditions, angle of heel = overtopping angle.

Approximate Barge Parameters Required for Stability **Test II Results**				
Parameter	**Metric Units**		**US Units**	
LOA	105	m	344	ft
Beam	35	m	115	ft
GM_{XX}	746	m	2450	ft
GM_{YY}	29	m	96	ft
Stability	**20**	**m*degrees**	**67**	**ft*degrees**

Table 7: Graph of partial transverse stability curve; righting arm vs. barge angle of heel (metric units) for barge LOA of 105 meters. Test II conditions, angle of heel = overtopping angle.

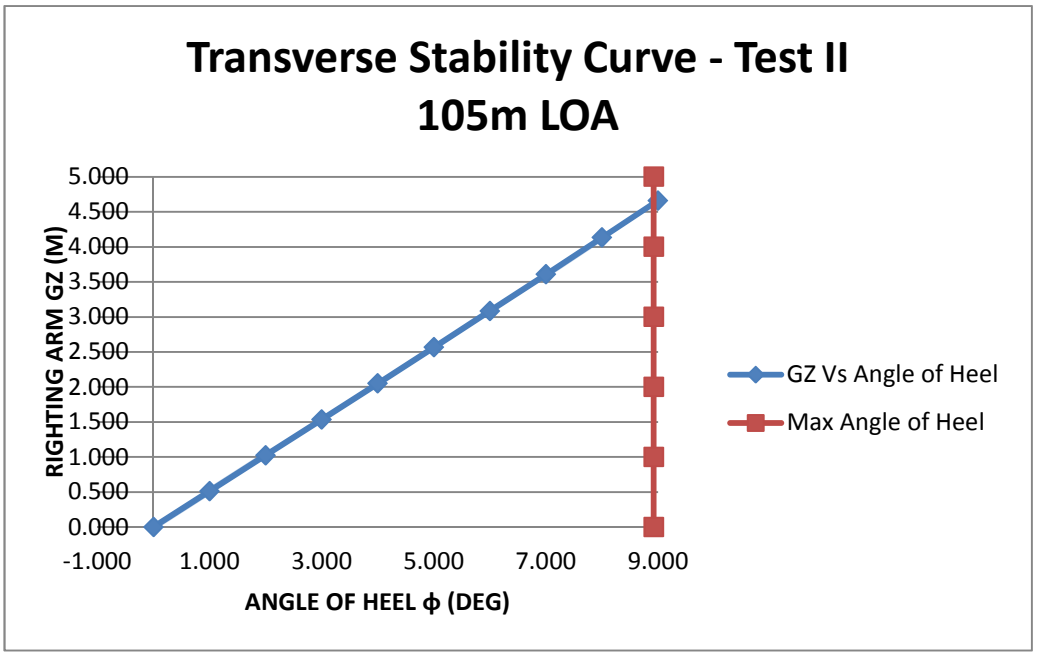

Transportation and Installation Sequence

The following implementation sequence is proposed to exploit favorable conditions associated with working within a protected harbor, and in close proximity to land-based facilities (See Appendix 2, Integrated Tower and Foundation Transportation and Installation Sequence Concept Sketches, Sheets 1-9).

1 The GBF is fabricated and lowered into the water via elevator platform (Sheet 1 of 9).

2 A supplemental floatation (pontoon) system fitted with four (4) hydraulic winches surrounds GBF and lifts it to a tow position (Sheet 2 of 9).

3 The pontoon system floats the GBF quay-side and lowers it to a leveled area until it rests on the mudline. The pontoon system is removed and prepared for the next GBF (Sheet 3 of 9).

4 The turbine tower is installed to the GBF via land-based crane and commissioned to the greatest extent possible (Sheet 4 of 9).

5 The GBF-turbine tower assembly is surrounded by a 35m wide by 105m long U-shaped Barge with a notch (open slot) for the tapered tower section and turbine tower to extend vertically above the barge (Sheet 5 of 9).

6 Four (4) hydraulic winches, mounted on the barge, lift the GBF-turbine tower until the GBF buoyancy chambers are pulled flush against the bottom of the barge hull. The GBF-tower is now in the tow position (Sheet 6 of 9).

7 The turbine tower is braced by a tower support structure (with a hydraulic collar) fitted to the barge (Sheet 7 of 9).

8 Tugs will tow the Barge and GBF-tower assembly from the pier to a designated staging area, and eventually out to the project site. Fabrication and installation seasons are similar but are not necessarily successive for each GBF fabrication. It is reasonable to assume that the GBF will need to be staged in the harbor before being towed offshore (Sheet 8 of 9).

9 Once the barge reaches the installation location, the support collar will be disengaged and barge-mounted winches will be used to lower the GBF-tower assembly to the prepared lakebed (Sheet 9 of 9).

Operations

While the selected fabrication yard's waterfront facilities are not designed to accommodate the integrated tower/GBF installation phase (Regional Justification for Fabrication Facility, 2012), it is possible that the selected or another facility could be modified as needed to facilitate assembly and installation of the GBF with integrated tower system. The lakebed at pier-side may need to be improved such that the surface

at that area is both level and capable of supporting the weight of the GBF and turbine tower.

The pontoon floatation system discussed in the referenced Supplemental Floatation Summary can be accommodated, and utilized in conjunction with the integrated system to transport the GBF from the elevator to a designated staging within the harbor. The integrated tower/GBF concept assumes that lifting points on the GBF can be used interchangeably between both the pontoon and the integrated concept transportation systems. The integrated concept requires a holistic system design review to confirm that the pick points on the GBF can be used consistently during all stages of fabrication, transportation, and installation. This will ultimately require coordination between all tasks.

Proposed modifications to the pontoon supplemental transportation concept will ultimately serve to reduce offshore turbine installation costs. Installing the turbine tower before towing the assembly offshore will shorten the duration of offshore installation and commissioning activities. Traditional offshore installation of the tower requires the use of a jack-up crane vessel. The objective of this modified design is to perform as much of the installation as possible with land-based equipment, or even barge-mounted equipment, pier-side and within a protected harbor. Doing so could lower estimated costs of construction associated with hiring and mobilizing a jack-up barge by eliminating several offshore trips and working days. Limiting the duration of offshore installation and the need for water-based equipment will reduce installation costs and the levelized cost of energy.

Recommendations and Areas of Future Study

One possible area of future study could include lowering the system center of gravity by lowering the GBF once the barge has exited the harbor. This may provide additional stability and possibly reduce the size of the design barge required to tow the system to the project site. As the system would be suspended by winches during tow, dynamic stability of two bodies would have to be investigated. It is likely that the speed of tow would have to be reduced significantly for this option to be viable.

Another area of future study is consideration of impacts on stability of distribution of weight on the barge deck. In the calculation procedures outlined above, the barge's asymmetrical U-shape is accounted for when calculating the system's waterplane moment of inertia however distribution of weight (i.e. winches, sheaves, and additional displacement required by GBF) is considered as being evenly distributed on the barge deck. In reality, the loading is symmetrical only in the transverse direction (about the Y-Y axis). Longitudinally, the system center of gravity sits closer to the barge notch area. This could potentially generate moments about the X-X axis that are not

accounted for in this study. As system stability is generally limited in the transverse direction, it is assumed for the purpose of this study that increasing the barge plan area to accommodate the need for transverse stability effectively provides adequate stability in the longitudinal direction. A future analysis might consider the effects of unevenly distributed weights on system stability.

As an alternative to considering impacts on stability due to asymmetrical loadings, the U-barge floatation system could be modified into a dual integrated symmetrical system. The system would include symmetrical notches (slots) for two (2) GBFs, symmetrically placed winches/sheaves, and potentially a unified tower support structure with two (2) collar extensions. This type of system would allow for decreased transportation time.

The integrated tower/GBF system concept proposes that minimizing offshore installation reduces costs and possible construction duration. Ideally, the turbine tower, nacelle and blades could be fitted to the GBF and towed offshore to further reduce offshore construction costs and construction duration. A fully integrated concept, including all four (4) major components of the turbine, raises several issues for future consideration. Dynamic modeling would be required to approximate the accelerations of all elements, in order to prove that motions stay within acceptable OEM mandated limits. A comprehensive consideration of all operations involved would be required to weigh the benefits and possible risks associated with a fully integrated system.

The conceptual analysis described herein suggests that it is feasibly that an integrated GBF/tower system may be transported from Cleveland harbor to the offshore project site and lowered to the lakebed by the transport vessel. Prior to implementation, a full dynamic analysis of the system is recommended.

The level and flatness of the lakebed at the project site has been identified as an area of concern. In order to mitigate risks associated with the foundation's plumbness, site specific geotechnical parameters should be closely investigated. It is recommended that these parameters be analyzed to determine the most effective risk mitigation strategy as well as most effective method to maintain plumbness of the turbine/tower system.

References

A Group of Authorities, *Principles of Naval Architecture*, Evaluation of Stability, Section 7, The Society of Naval Architects and Marine Engineers, 1967.

C.F.R. Title 46, *Shipping*, Chapter 9, Section 151.10-5 (last updated October 1, 2002).

Jonkman, Butterfield, Musial, and Scott, *Definition of a 5-MW Reference Wind Turbine for Offshore System Development*, NREL, (2009).

Karal, Petter. *What's New About Gravity Base Foundations for Offshore Wind?* Wind Energy Update. http://social.windenergyupdate.com/offshore. Rikki Stancich, (2010).

Rawson and Tupper, *Basic Ship Theory*, Volume 1 Third Edition, Longman London and NY Print, (1983).

Appendix 2: Concept Sketches

Series	Task Title	No. of Sketches in Series
SK-12	GBF Assembly Sequence	6
SK-13	GBF Assembly Elevation and Installed Section	3
SK-14	Supplemental Floatation	7
SK-15	Hydraulic Winch and Sheave System	11
SK-16	GBF with Penetration Skirt	1
SK-17	Integrated Tower/GBF	9
SK-18	Ports Considered	1

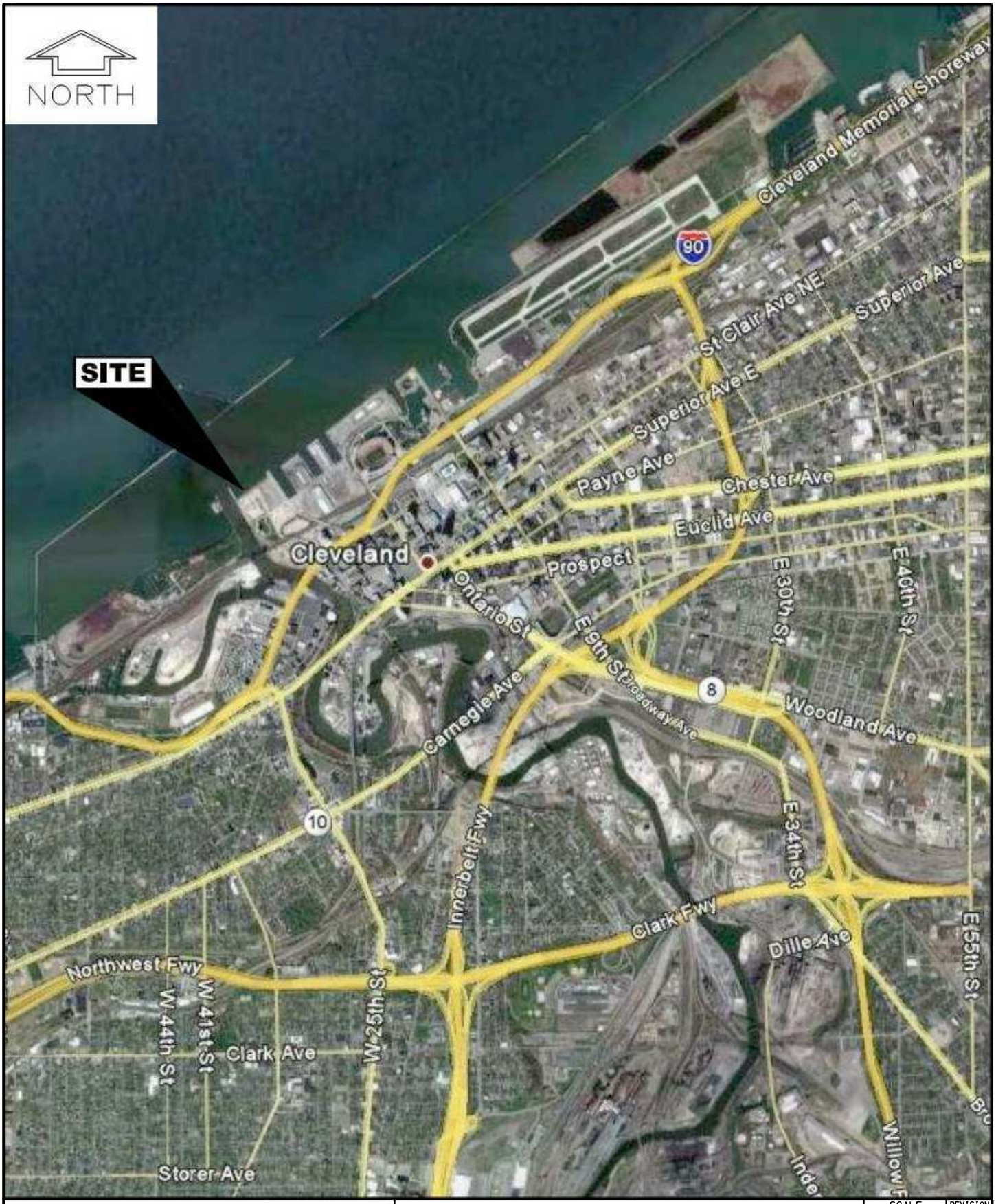

Ocean and Coastal Consultants | COWI

Visit us at www.ocean-coastal.com

DESIGNED BY: STWH	DRAWN BY: HHRA	CHECKED BY: STWH

FRESHWATER WIND I

LOCATION PLAN

SCALE N. T. S.	REVISION
DATE 06/17/2012	
SKETCH NO. SK-12-01	

O:\A025000\A029896\3_Pdoc\CAD\Task18\SK-12-01.dwg SK-12-01 Hajim H. Ramirez Fri, 10 May 2013 - 11:53am

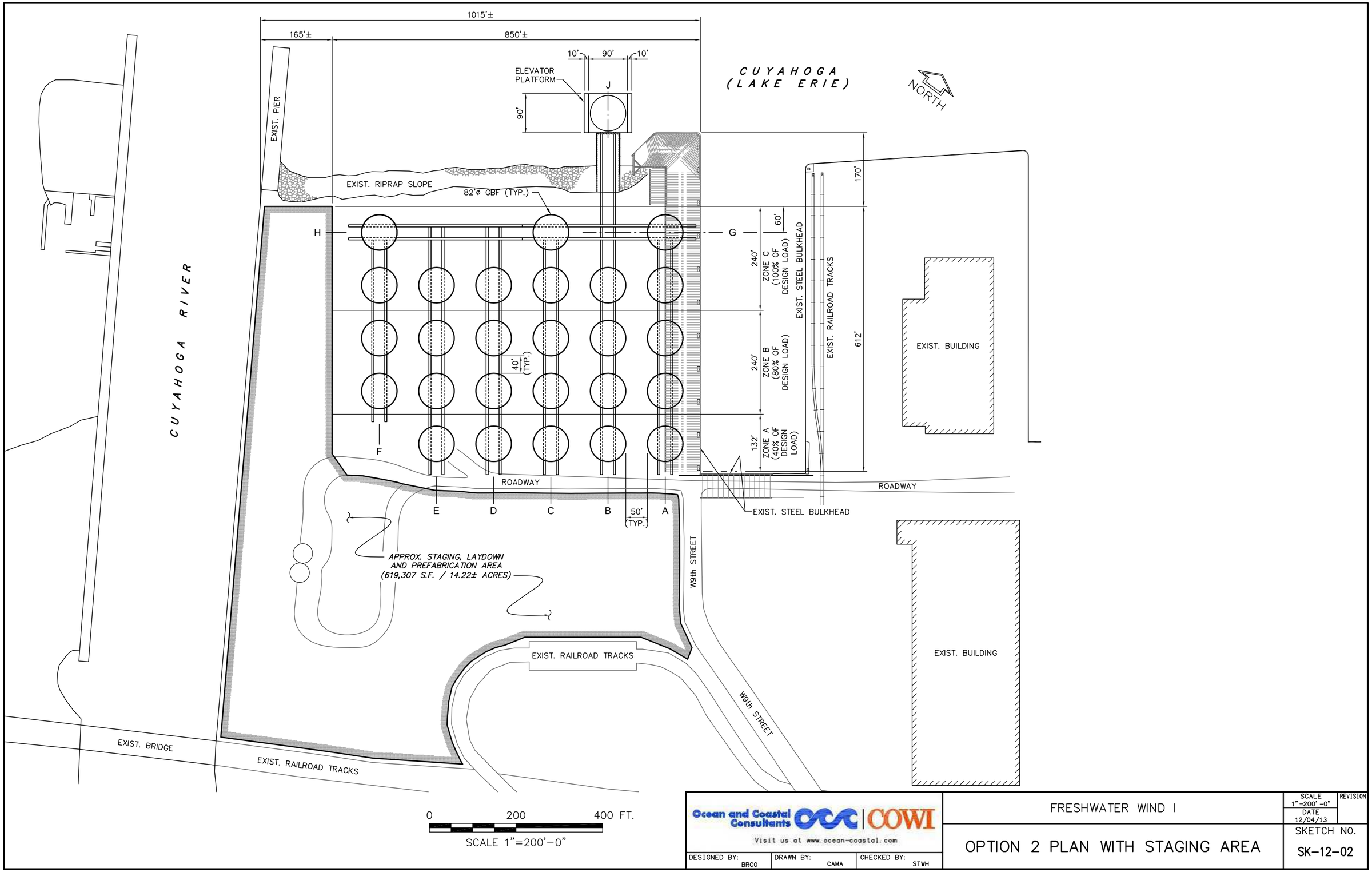

Ocean and Coastal Consultants | COWI

Visit us at www.ocean-coastal.com

DESIGNED BY: BRCO	DRAWN BY: CAMA	CHECKED BY: STWH

FRESHWATER WIND I

OPTION 2 PLAN WITH STAGING AREA

SCALE 1"=200'-0"	REVISION
DATE 12/04/13	
SKETCH NO. SK-12-02	

O:\A025000\A029896\3_Pdoc\CAD\Task 18\SK-12-02.dwg SK-12-02 Hajim H. Ramirez Thu, 09 May 2013 - 5:12pm

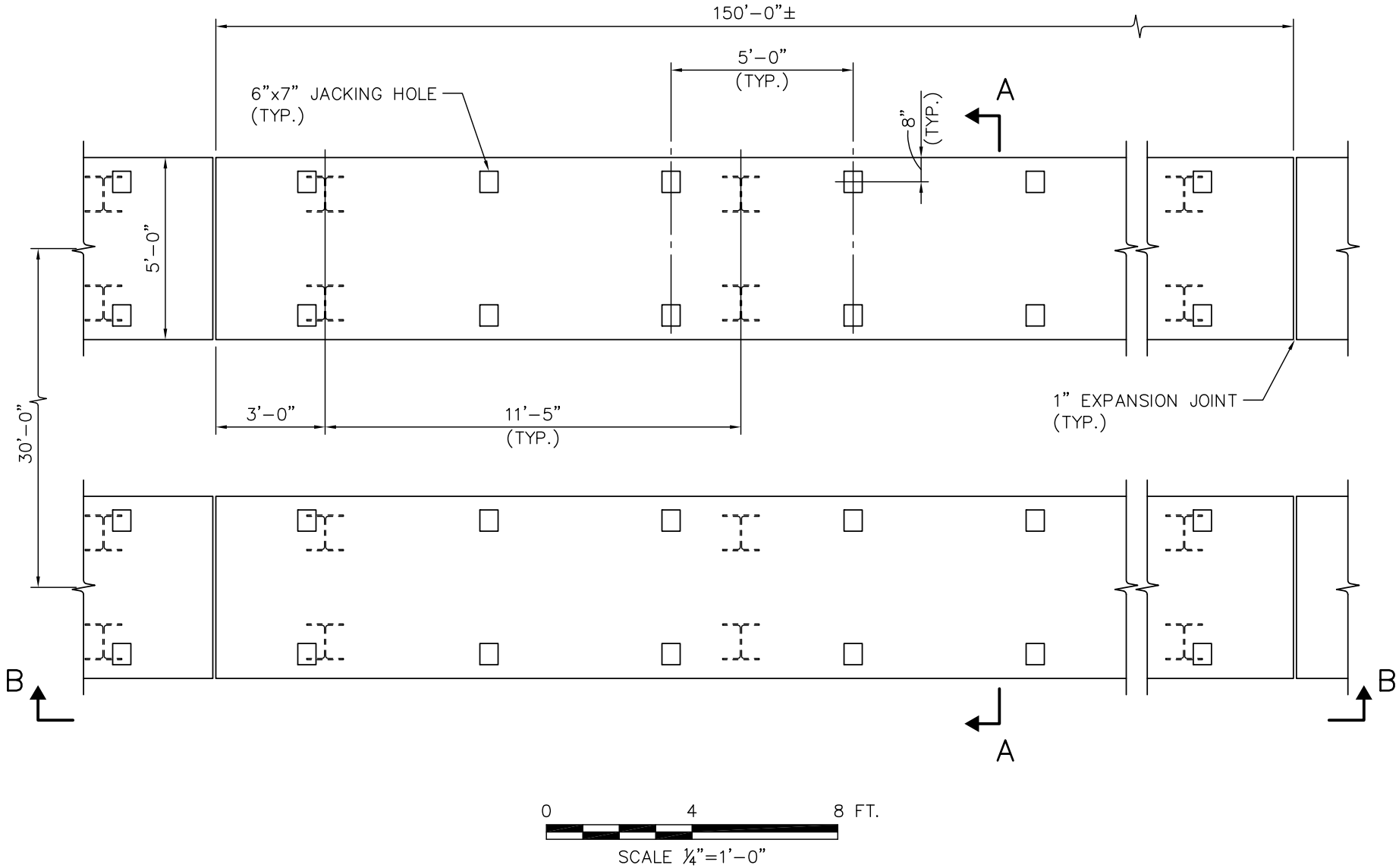

Ocean and Coastal Consultants | COWI

Visit us at www.ocean-coastal.com

DESIGNED BY: RSMS	DRAWN BY: HHRA	CHECKED BY: STWH

FRESHWATER WIND I

PILE PLAN OF SKIDDING RAIL

SCALE 1/4"=1'-0"	REVISION
DATE 06/07/2012	
SKETCH NO. SK-12-03	

O:\A025000\A029896\3_Pdoc\CAD\Task 18\SK-12-03.dwg Sk-12-03 Hajim H. Ramirez Fri, 10 May 2013 - 8:32am

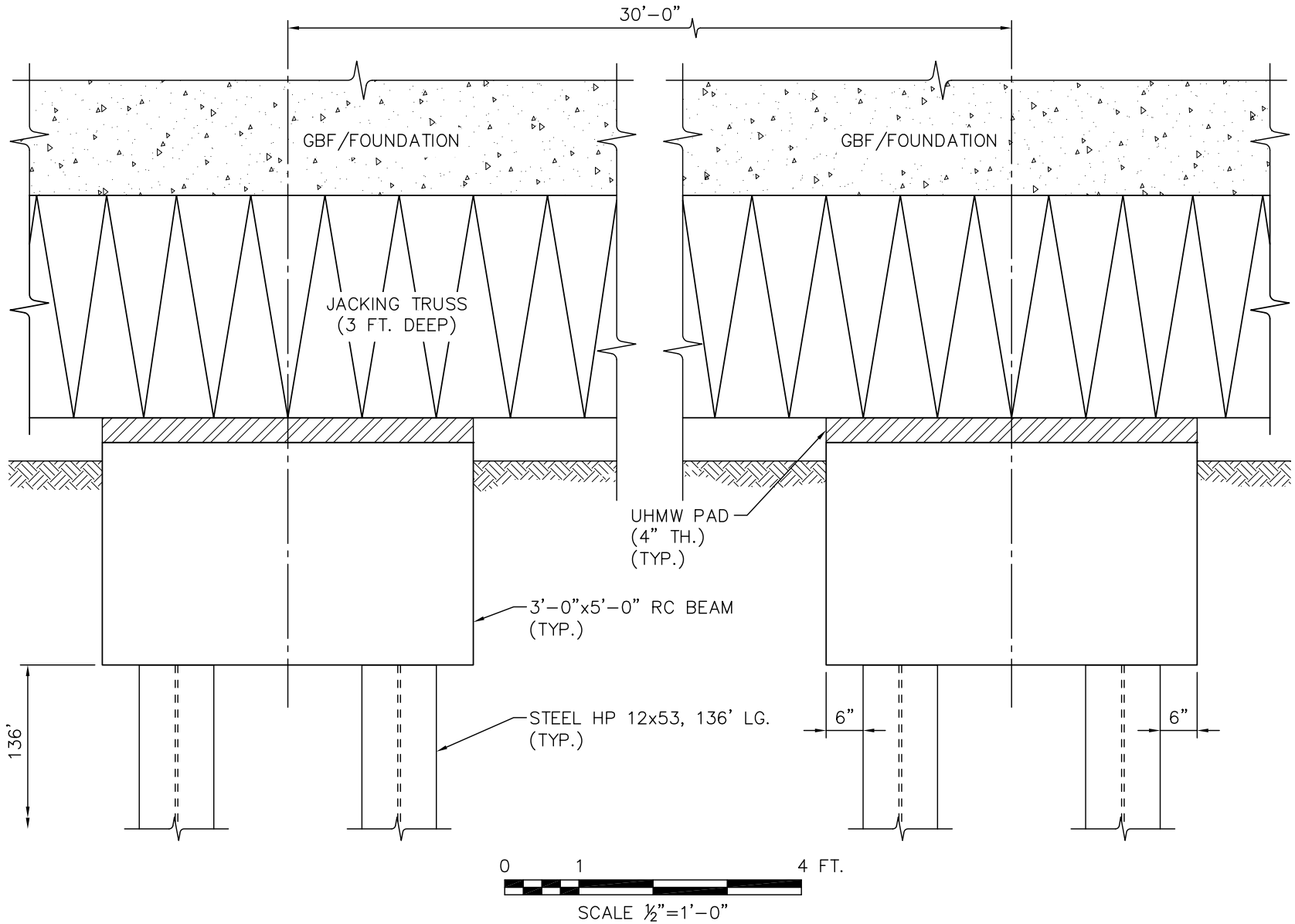

Ocean and Coastal Consultants | COWI

Visit us at www.ocean-coastal.com

DESIGNED BY: RSMS	DRAWN BY: HHRA	CHECKED BY: STWH

FRESHWATER WIND I

SECTION A–A

SCALE 1/2"=1'-0"	REVISION
DATE 06/07/2012	

SKETCH NO.

SK-12-04

O:\A025000\A029896\3_Pdoc\CAD\Task 18\SK-12-04.dwg Sk-12-04 Hajim H. Ramirez Fri, 10 May 2013 - 8:33am

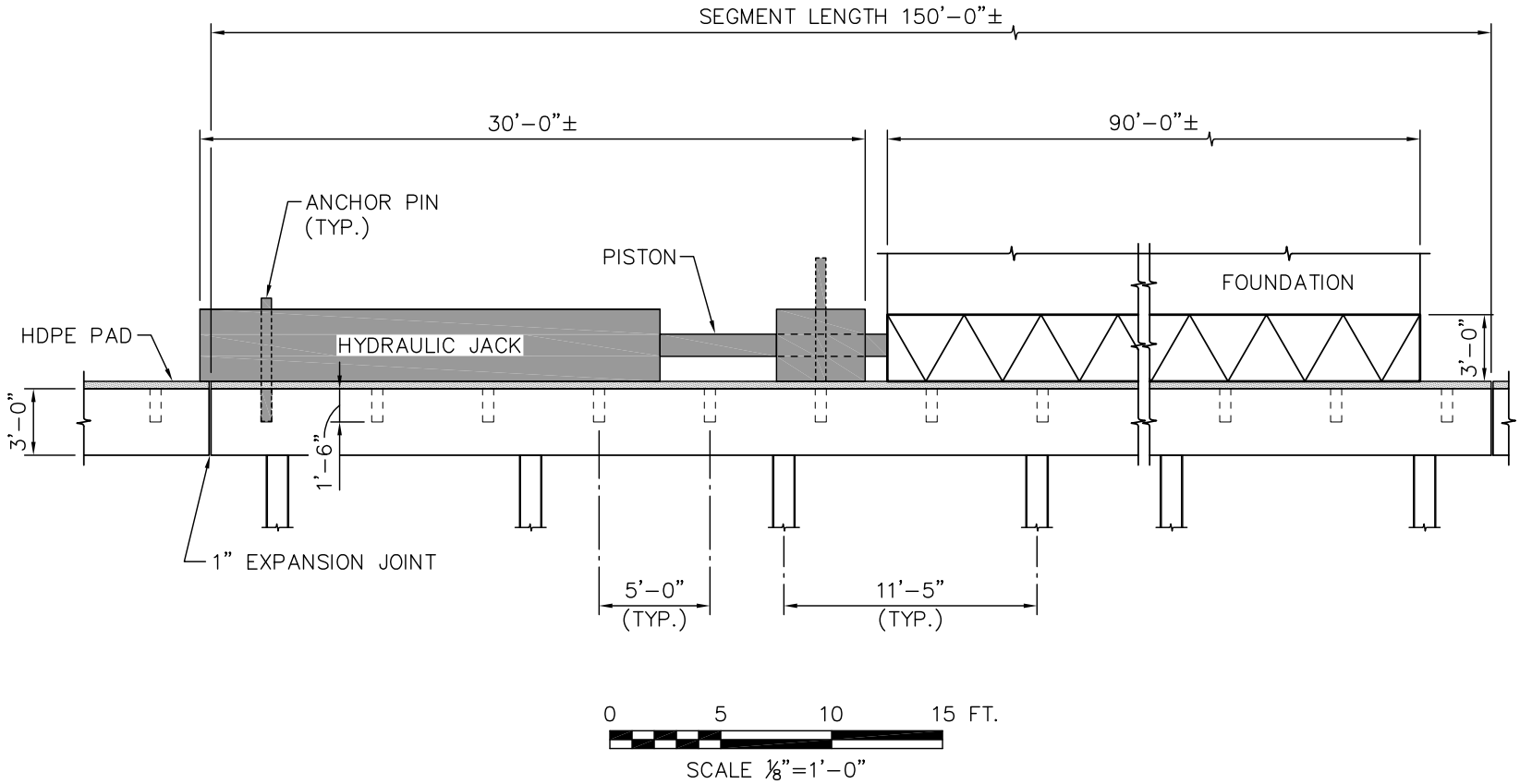

Ocean and Coastal Consultants | COWI

Visit us at www.ocean-coastal.com

DESIGNED BY: RSMS	DRAWN BY: HHRA	CHECKED BY: STWH

FRESHWATER WIND I

ELEVATION B-B

SCALE 1/8"=1'-0"	REVISION
DATE 06/07/2012	

SKETCH NO.

SK-12-05

O:\A025000\A029896\3_Pdoc\CAD\Task18\SK-12-05.dwg Sk-05 Hajim H. Ramirez Fri, 10 May 2013 - 9:23am

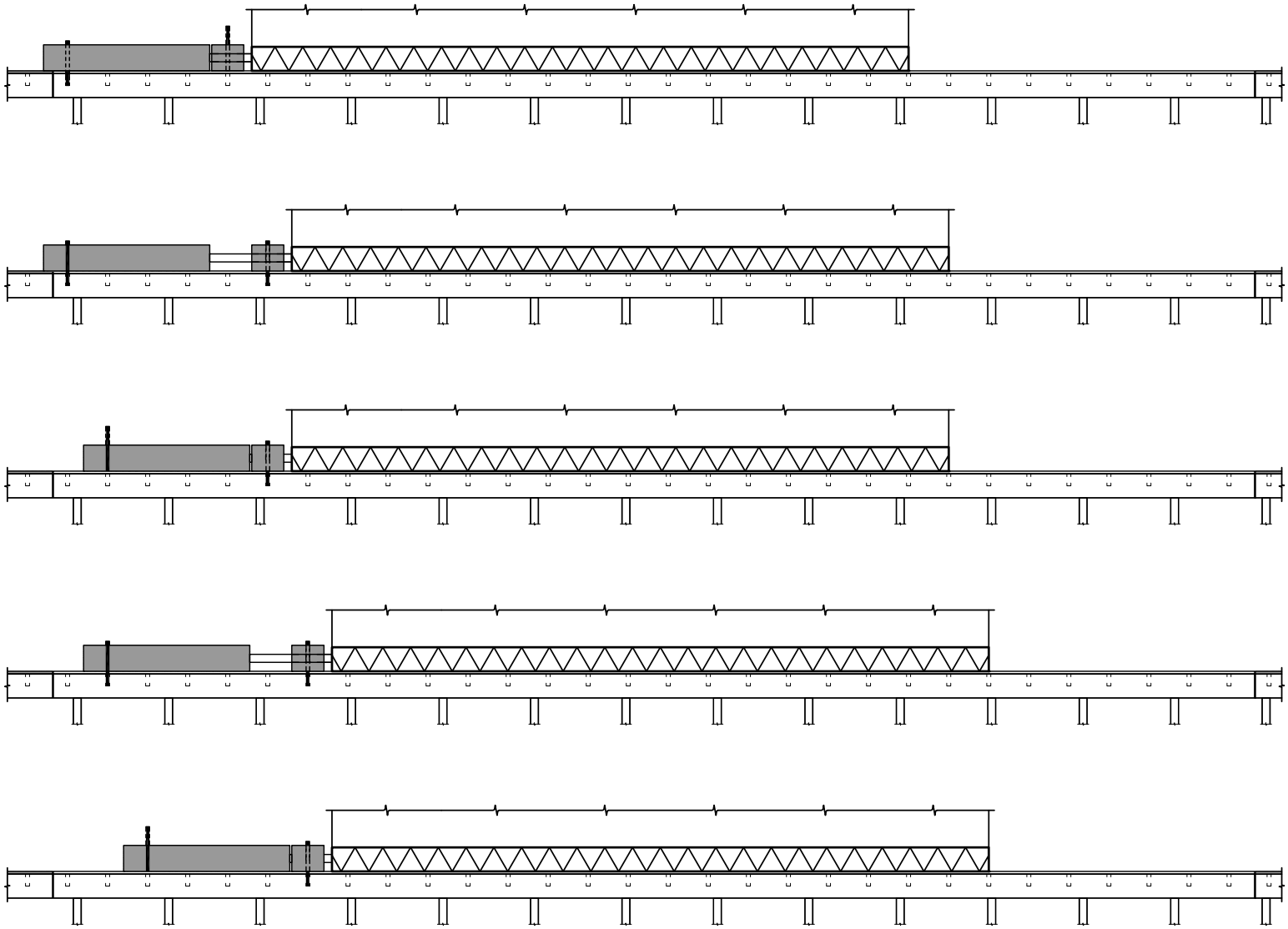

0 20 40 FT.

SCALE 1"=20'-0"

Ocean and Coastal Consultants | COWI

Visit us at www.ocean-coastal.com

DESIGNED BY:	DRAWN BY:	CHECKED BY:
RSMS	HHRA	STWH

FRESHWATER WIND I

SEQUENCE

SCALE	REVISION
1"=20'-0"	
DATE 06/07/2012	

SKETCH NO.

SK-12-06

O:\A025000\A029896\3_Pdoc\CAD\Task 18\SK-12-06.dwg SK-12-06 Hajim H. Ramirez Fri, 10 May 2013 - 8:34am

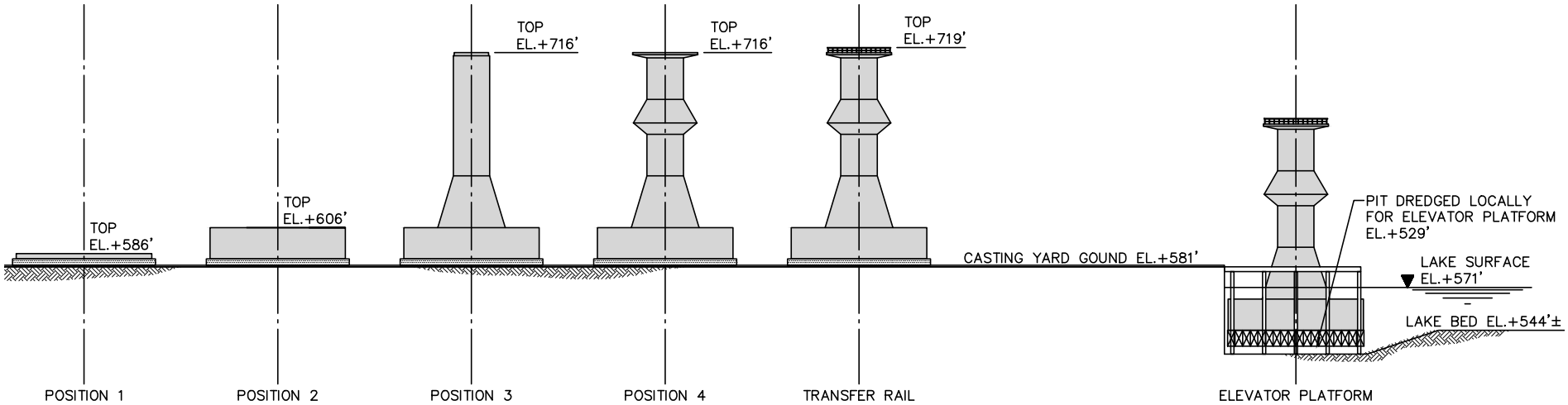

0 100 200 FT.

SCALE 1"=100'-0"

Ocean and Coastal Consultants | COWI

Visit us at www.ocean-coastal.com

DESIGNED BY: BRCO	DRAWN BY: HHRA	CHECKED BY: STWH

DOE FRESHWATER WIND

ASSEMBLY LINE SEQUENCE

SCALE 1"=100'-0"	REVISION
DATE 11/22/13	

SKETCH NO.

SK-13-01

O:\A025000\A029896\3_Pdoc\CAD\Task13\SK-01.dwg Sk-01 Hajim H. Ramirez Mon, 25 Nov 2013 - 3:04pm

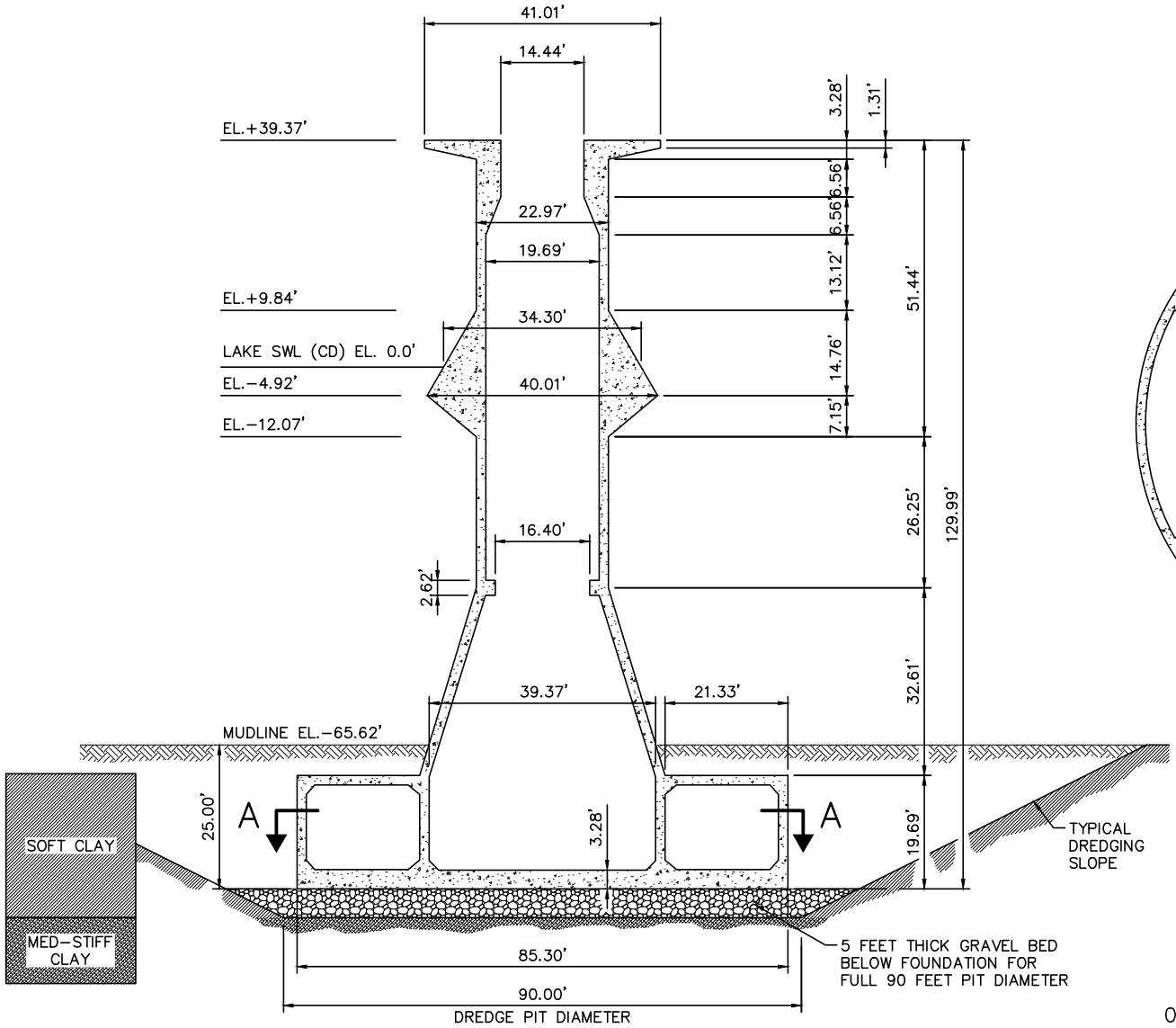

SECTION

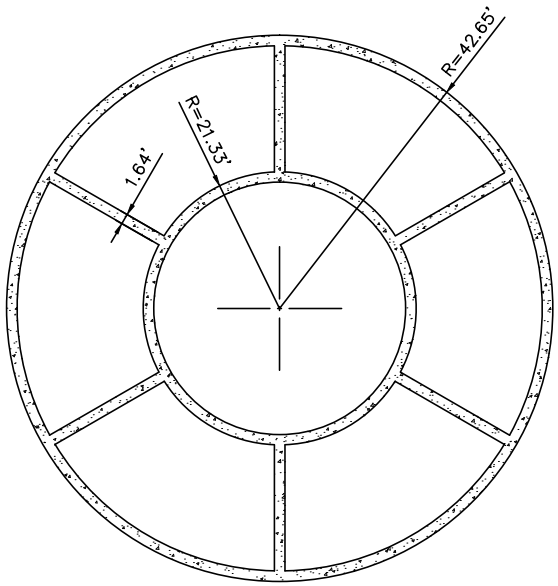

SECTION A-A

0 30 60 FT.

SCALE 1"=30'-0"

Ocean and Coastal Consultants | COWI

Visit us at www.ocean-coastal.com

DESIGNED BY: BRCO	DRAWN BY: HHRA	CHECKED BY: STWH

DOE FRESHWATER WIND

GRAVITY BASE FOUNDATION

SCALE 1"=30'-0"	REVISION
DATE 11/22/13	

SKETCH NO. SK-13-02

O:\A025000\A029896\3_Pdoc\CAD\Task13\SK-02.dwg Dwg 02 Hajim H. Ramirez Mon, 25 Nov 2013 - 3:03pm

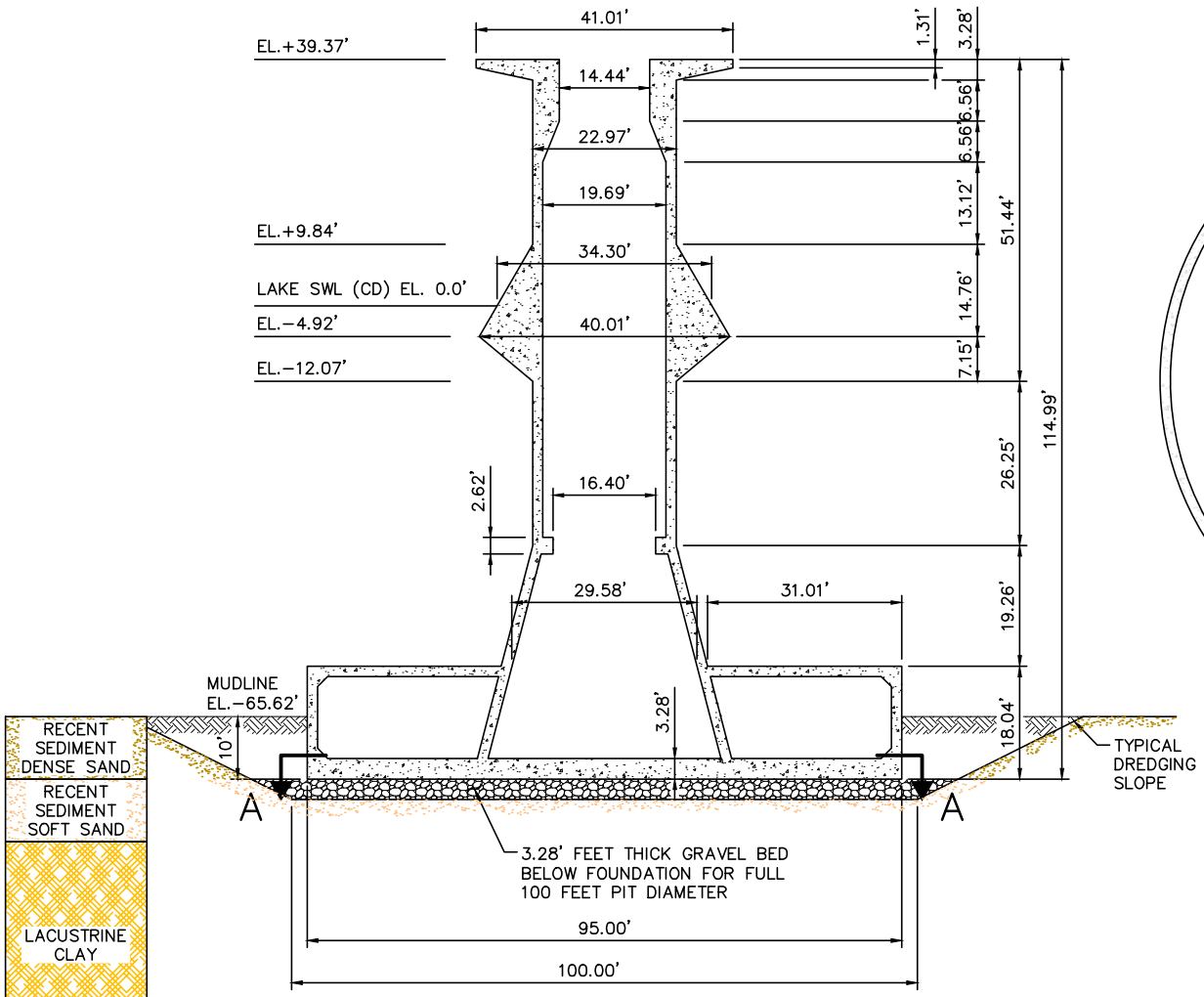

SECTION

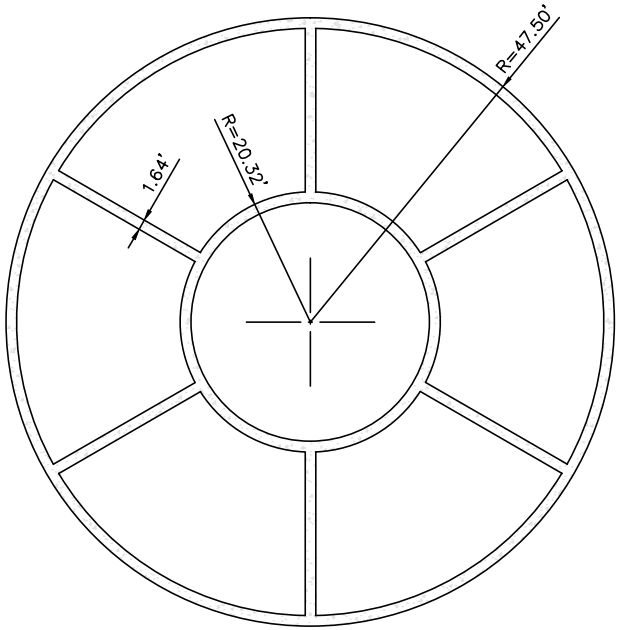

SECTION A–A

0 30 60 FT.

SCALE 1"=30'–0"

Ocean and Coastal Consultants | COWI

Visit us at www.ocean-coastal.com

DESIGNED BY: BRCO	DRAWN BY: HHRA	CHECKED BY: STWH

DOE FRESHWATER WIND

GRAVITY BASE FOUNDATION

SCALE 1"=30'–0"	REVISION
DATE 11/22/13	
SKETCH NO. SK–13–03	

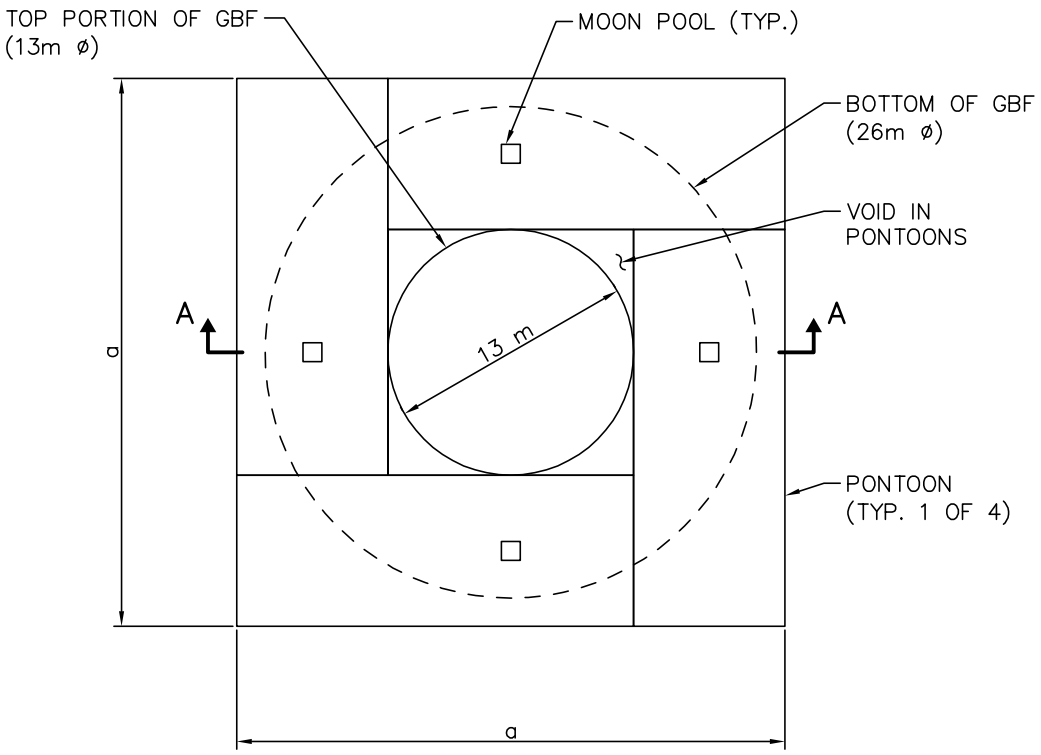

NOTE: DIMENSION "a" VARIES WITH BCH.

ALTERNATIVE 1A

0 SCALE ½"=1'-0" 20m

SCALE 1:400

Ocean and Coastal Consultants | COWI Visit us at www.ocean-coastal.com	DOE FRESHWATER WIND I		SCALE 1:400 DATE 05/15/13	REVISION
DESIGNED BY: LETO | DRAWN BY: HHRA | CHECKED BY:	SUPPLEMENTAL FLOATATION PONTOON CONFIGURATION		SKETCH NO. SK-14-01	

O:\A025000\A029896\3_Pdoc\CAD\Task14\Sk-01.dwg Sk-01 Hajim H. Ramirez Mon, 13 May 2013 - 10:26am

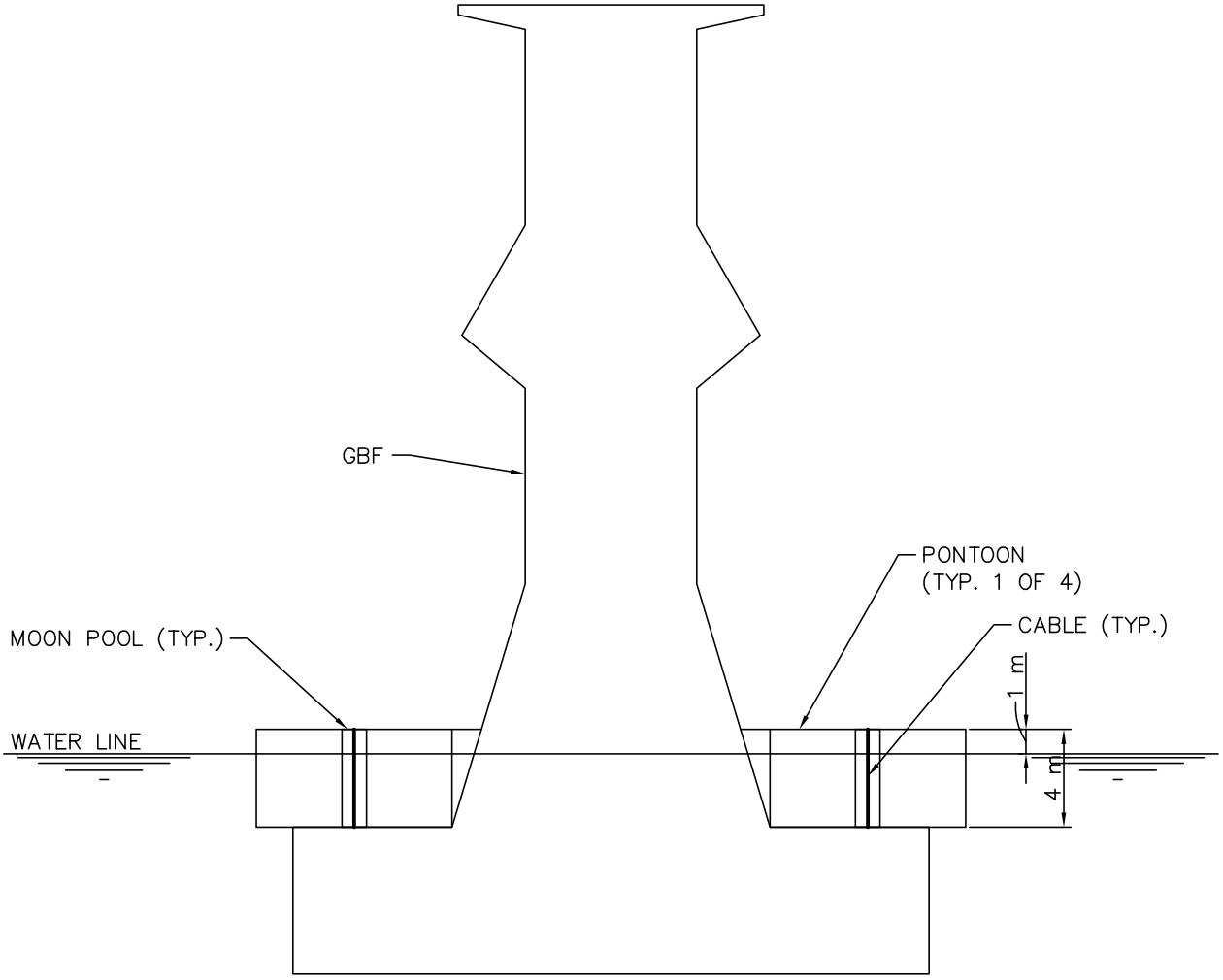

ALTERNATIVE 1A

SECTION A–A

TOW POSITION

0 5 10 15m

SCALE 1:300

Ocean and Coastal Consultants | COWI

Visit us at www.ocean-coastal.com

DESIGNED BY: LETO	DRAWN BY: HHRA	CHECKED BY:

DOE FRESHWATER WIND I

TRANSPORTING GBF

SCALE 1:300	REVISION
DATE 05/15/13	

SKETCH NO.

SK–14–02

O:\A025000\A029896\3_Pdoc\CAD\Task14\Sk-02.dwg Sk-02 Hajim H. Ramirez Thu, 09 May 2013 - 3:07pm

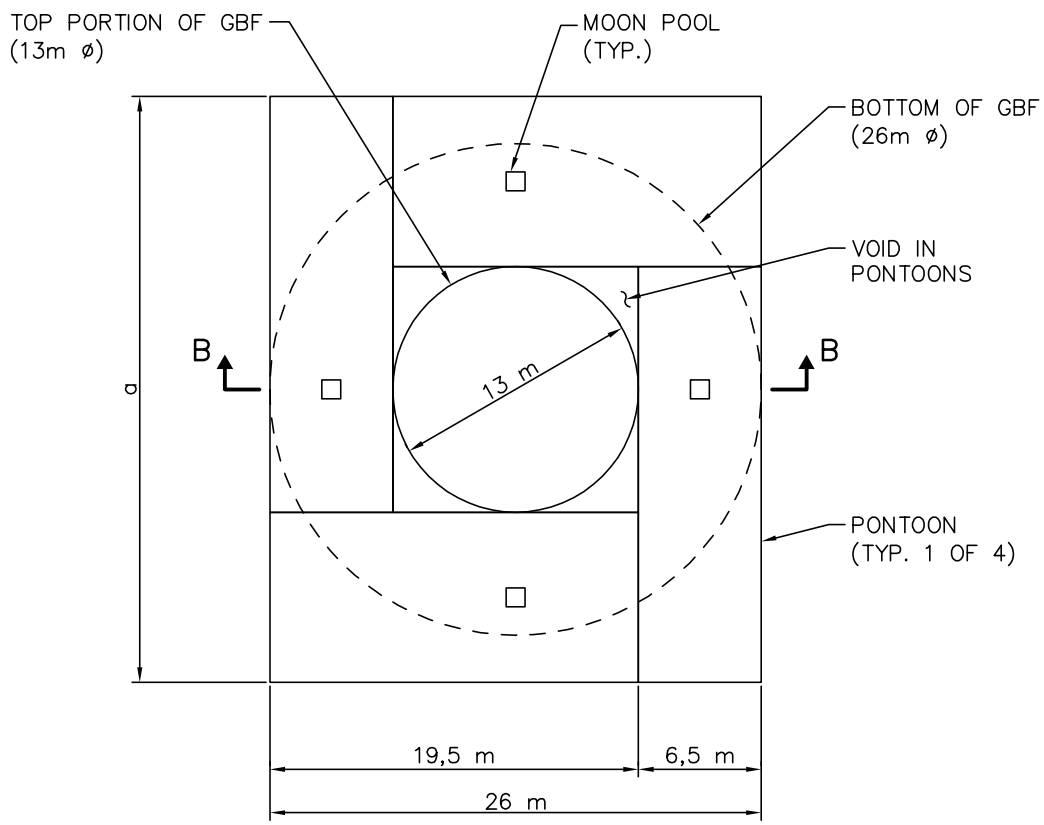

NOTE: DIMENSION "a" VARIES WITH BCH.

ALTERNATIVE 2

0 SCALE ½"=1'-0" 20m

SCALE 1:400

Ocean and Coastal Consultants | COWI

Visit us at www.ocean-coastal.com

DESIGNED BY:	DRAWN BY:	CHECKED BY:
LETO	HHRA	

DOE FRESHWATER WIND I

SUPPLEMENTAL FLOATION PONTOON CONFIGURATION

SCALE	REVISION
1:400	
DATE 05/15/13	

SKETCH NO.

SK-14-03

O:\A025000\A029896\3_Pdoc\CAD\Task14\Sk-03.dwg Sk-03 Hajim H. Ramirez Mon, 13 May 2013 - 10:28am

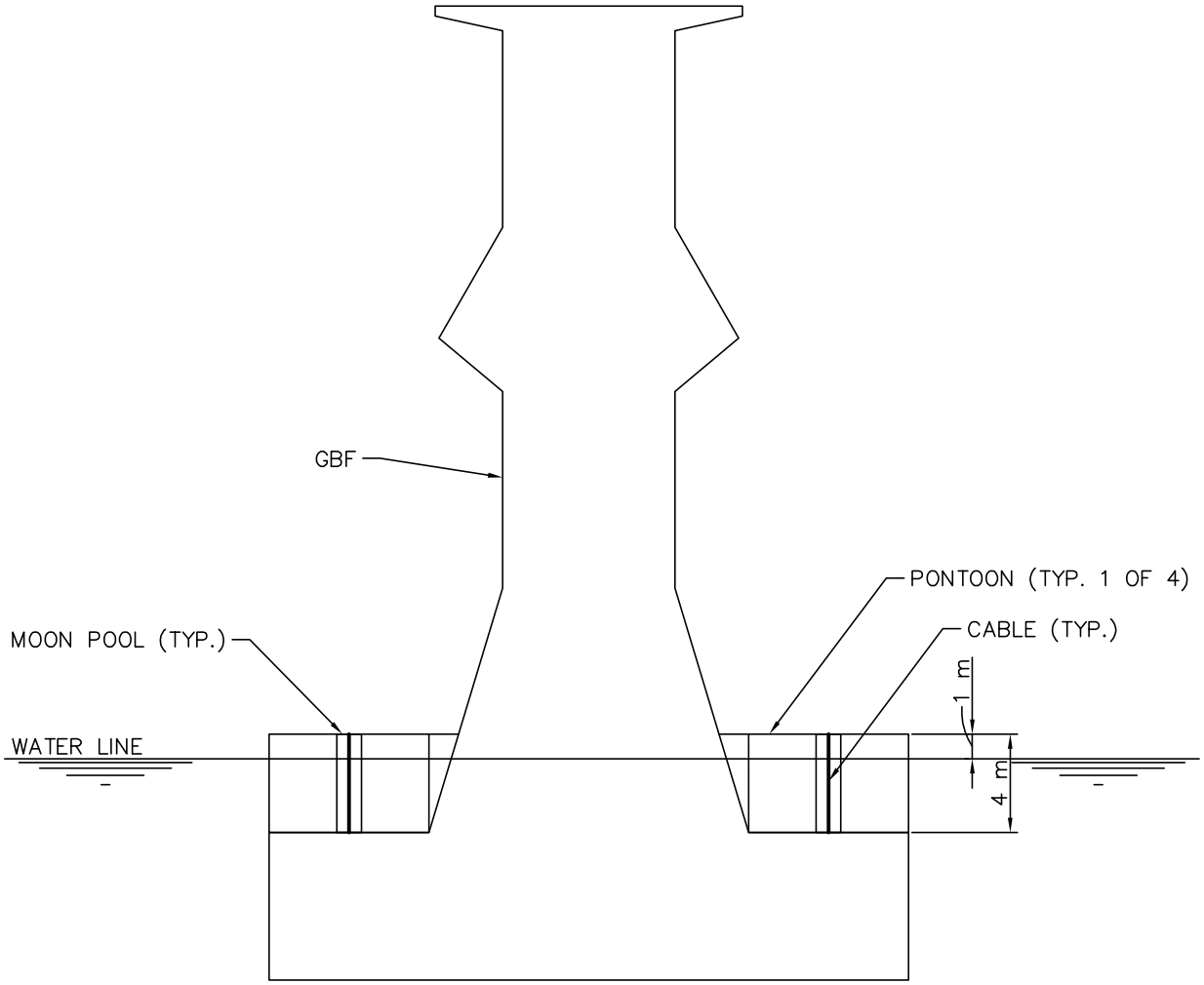

ALTERNATIVE 2
SECTION B–B
TOW POSITION

0 5 10 15m

SCALE 1:300

Ocean and Coastal Consultants | COWI

Visit us at www.ocean-coastal.com

DESIGNED BY: LETO	DRAWN BY: HHRA	CHECKED BY:

DOE FRESHWATER WIND I

TRANSPORTING GBF

SCALE 1:300	REVISION
DATE 05/15/13	

SKETCH NO. SK-14-04

O:\A025000\A029896\3_Pdoc\CAD\Task14\Sk-04.dwg Sk-04 Hajim H. Ramirez Thu, 09 May 2013 - 3:12pm

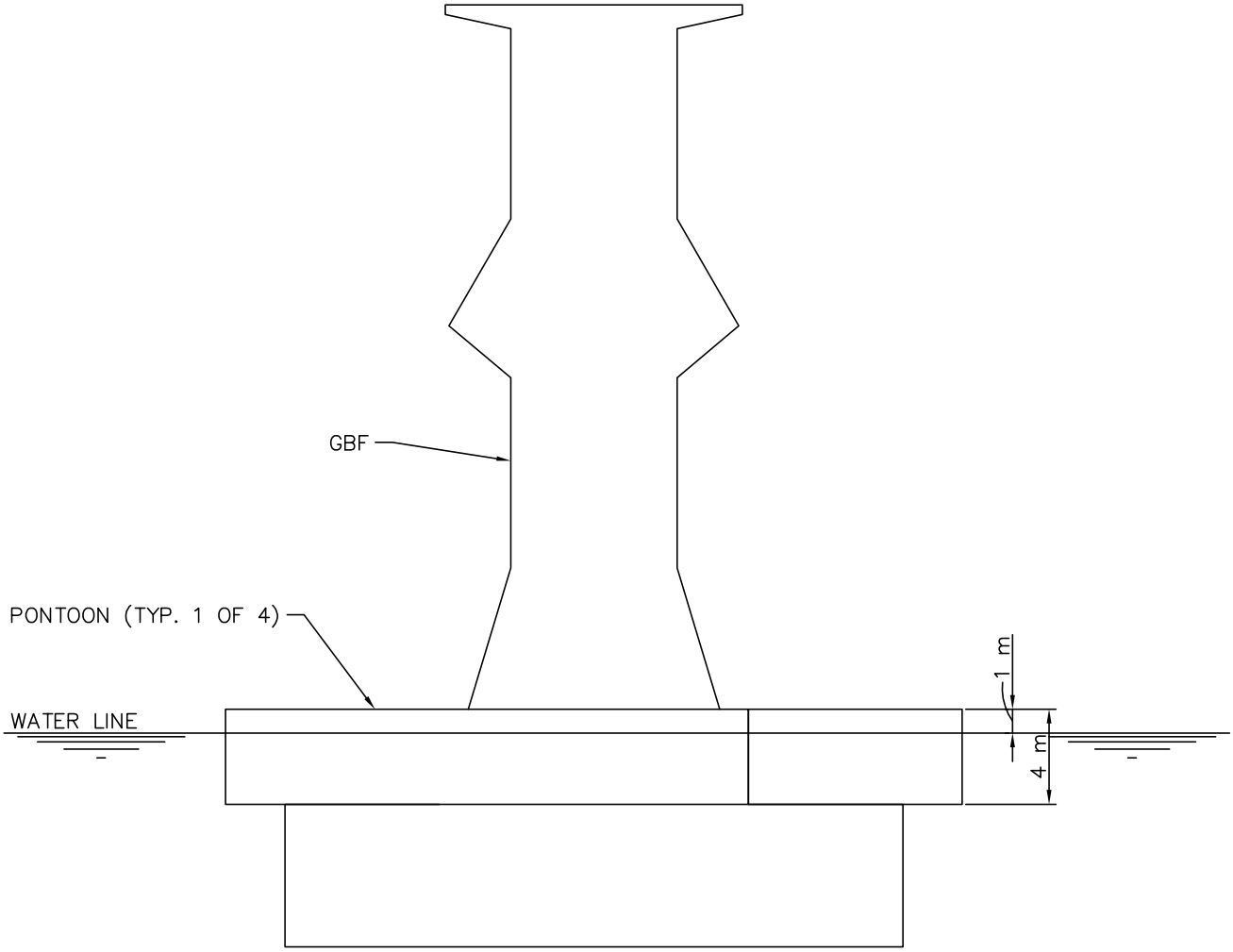

TYPICAL ELEVATION VIEW
TOW POSITION

0 5 10 15m

SCALE 1:300

Ocean and Coastal Consultants COWI Visit us at www.ocean-coastal.com	DOE FRESHWATER WIND I		SCALE 1:300 DATE 05/15/13	REVISION
DESIGNED BY: LETO / DRAWN BY: HHRA / CHECKED BY:	TRANSPORTING GBF		SKETCH NO. SK-14-05	

O:\A025000\A029896\3_Pdoc\CAD\Task14\Sk-04.dwg Sk-05 Hajim H. Ramirez Thu, 09 May 2013 - 3:13pm

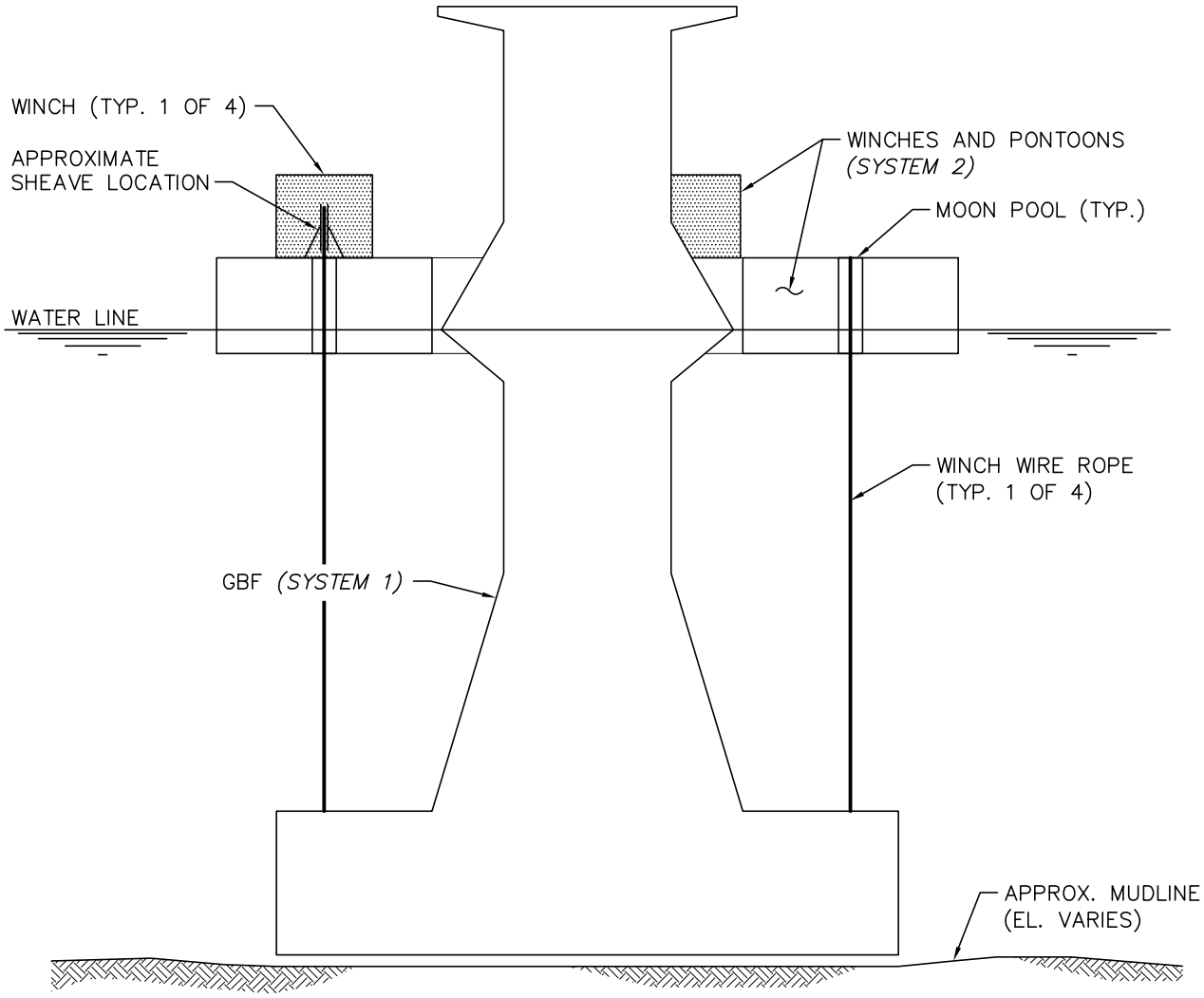

TYPICAL SECTION
GBF LOWERING
SUBMERGED POSITION

0 5 10 15m

SCALE 1:300

O:\A025000\A029896\3_Pdoc\CAD\Task14\Sk-06.dwg Sk-06 Hajim H. Ramirez Thu, 09 May 2013 - 3:15pm

Ocean and Coastal Consultants | COWI

Visit us at www.ocean-coastal.com

DESIGNED BY: LETO	DRAWN BY: HHRA	CHECKED BY:

DOE FRESHWATER WIND I

LOWERING GBF

SCALE 1:300	REVISION
DATE 05/15/13	

SKETCH NO.

SK-14-06

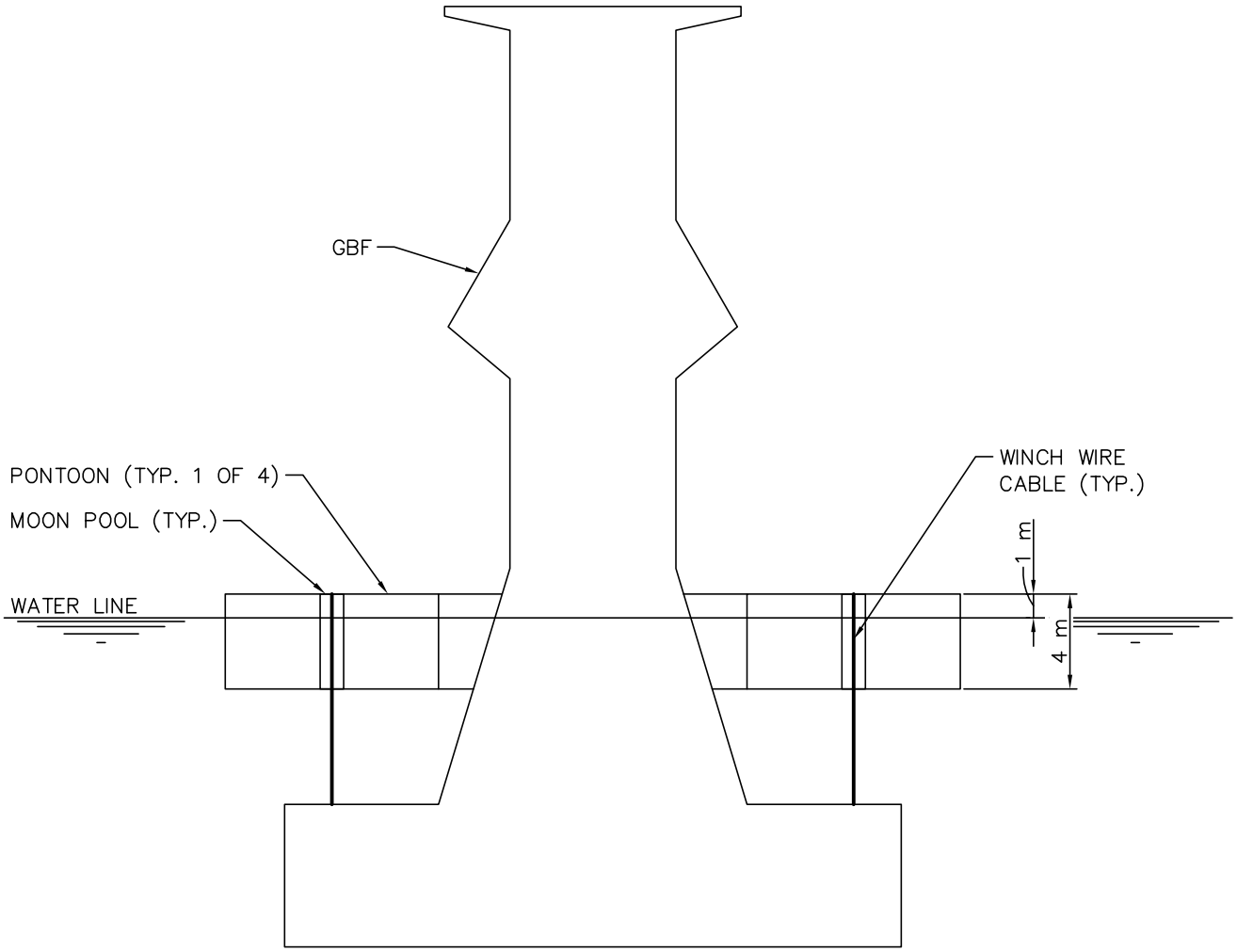

TYPICAL SECTION ALTERNATIVE
TOW POSITION

0 5 10 15m

SCALE 1:300

O:\A025000\A029896\3_Pdoc\CAD\Task14\Sk-07.dwg Sk-07 Hajim H. Ramirez Thu, 09 May 2013 - 3:21pm

Ocean and Coastal Consultants | COWI

Visit us at www.ocean-coastal.com

DESIGNED BY: LETO	DRAWN BY: HHRA	CHECKED BY:

DOE FRESHWATER WIND I

TRANSPORTING GBF

SCALE 1:300	REVISION
DATE 05/15/13	

SKETCH NO.

SK-14-07

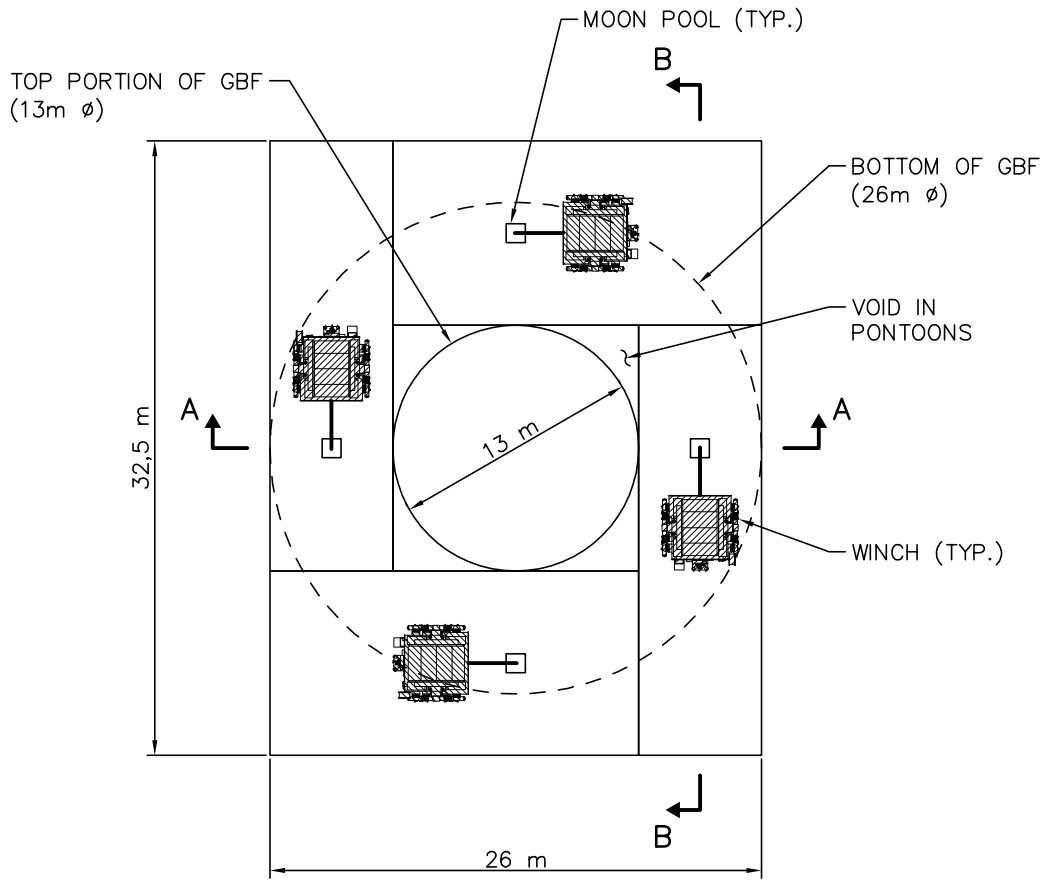

NOTE: SHEAVES NOT SHOWN FOR CLARITY.

0 10 20m

SCALE 1:400

Ocean and Coastal Consultants COWI Visit us at www.ocean-coastal.com	DOE FRESHWATER WIND I	SCALE 1:400 DATE 05/15/13	REVISION
DESIGNED BY: DMSA / DRAWN BY: HHRA / CHECKED BY:	TRANSPORTING GRAVITY BASED FOUNDATION – SHEET 1 OF 3	SKETCH NO. SK-15-01	

O:\A025000\A029896\3_Pdoc\CAD\Task15\Sk-01.dwg Sk-01 Hajim H. Ramirez Thu, 09 May 2013 - 9:42am

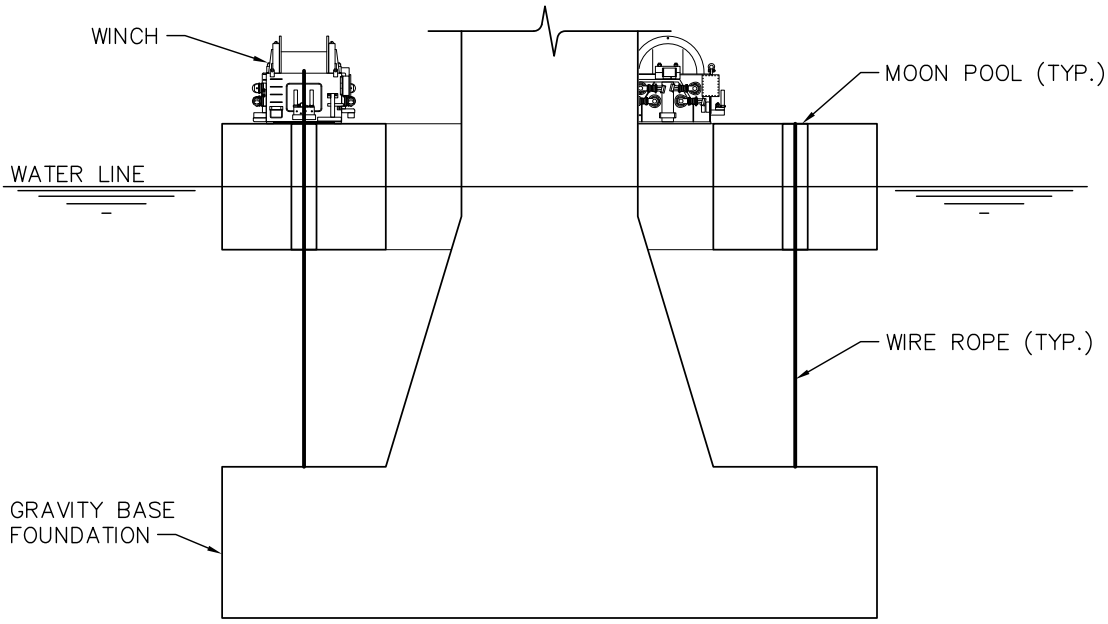

SECTION A–A
STEP 1 – LIFTING GBF

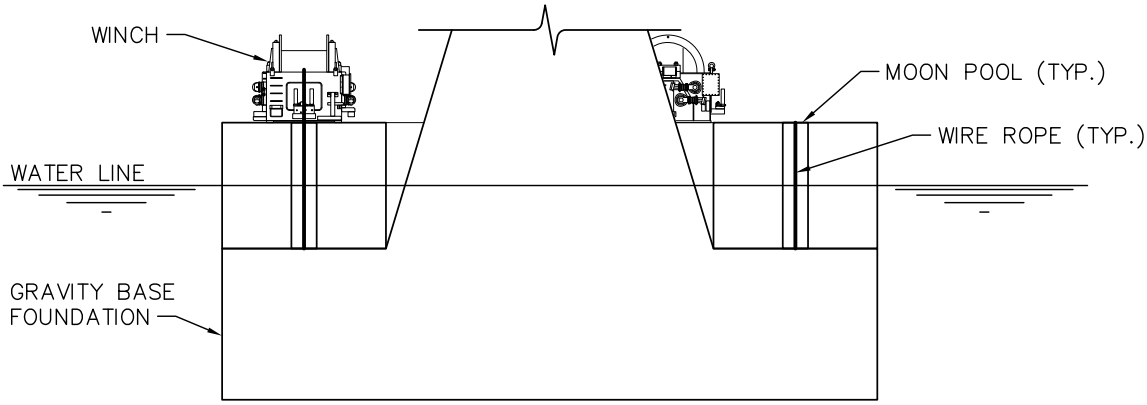

SECTION A–A
STEP 2 – TRANSPORTATION OF GBF

NOTE: SHEAVES NOT SHOWN FOR CLARITY.

0 5 10 15m

SCALE 1:300

Ocean and Coastal Consultants | COWI

Visit us at www.ocean-coastal.com

DESIGNED BY: DMSA	DRAWN BY: HHRA	CHECKED BY:

DOE FRESHWATER WIND I

TRANSPORTING GRAVITY BASED FOUNDATION – SHEET 2 OF 3

SCALE 1:300

DATE 05/15/13

REVISION

SKETCH NO. SK-15-02

O:\A025000\A029896\3_Pdoc\CAD\Task15\Sk-02.dwg Sk-02 Hajim H. Ramirez Thu, 09 May 2013 - 9:49am

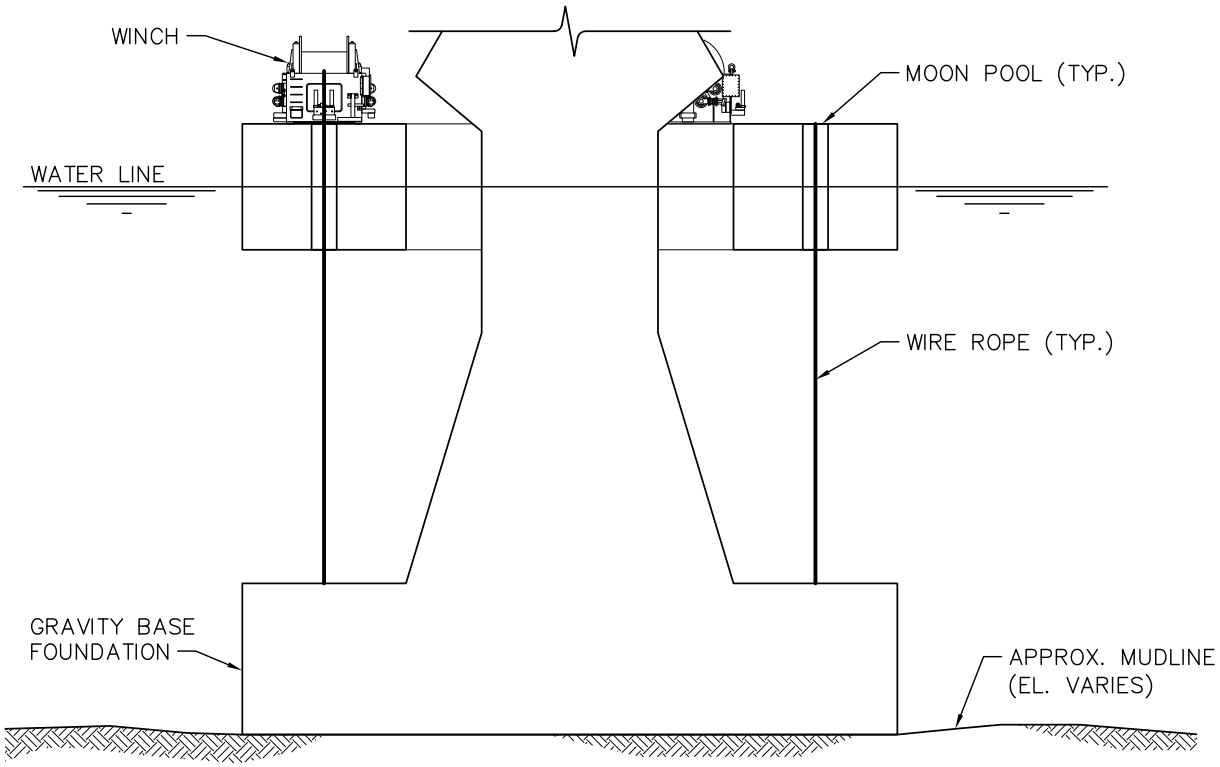

NOTE: SHEAVES NOT SHOWN FOR CLARITY.

SECTION A–A
STEP 2 – PLACING GBF

0 5 10 15m

SCALE 1:300

O:\A025000\A029896\3_Pdoc\CAD\Task15\Sk-02.dwg Sk-03 Hajim H. Ramirez Thu, 09 May 2013 - 9:48am

Ocean and Coastal Consultants | COWI

Visit us at www.ocean-coastal.com

DESIGNED BY: DMSA	DRAWN BY: HHRA	CHECKED BY:

DOE FRESHWATER WIND I

TRANSPORTING GRAVITY BASED FOUNDATION – SHEET 3 OF 3

SCALE 1:300	REVISION
DATE 05/15/13	
SKETCH NO. SK-15-03	

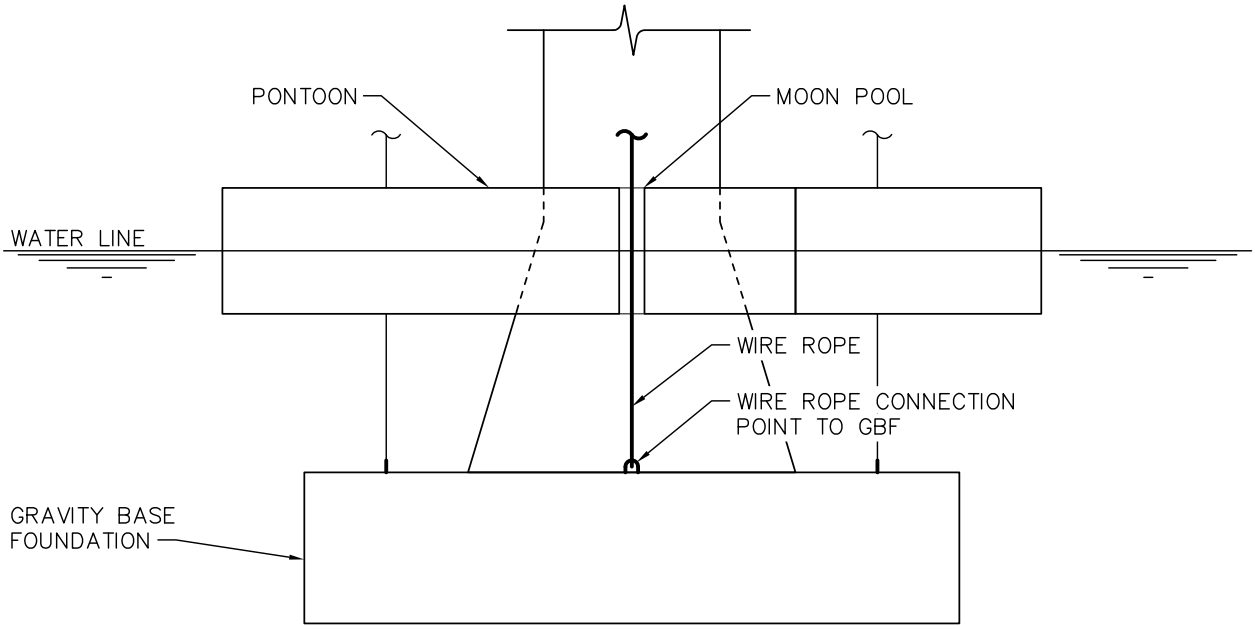

SECTION B–B
LIFTING/LOWERING GBF

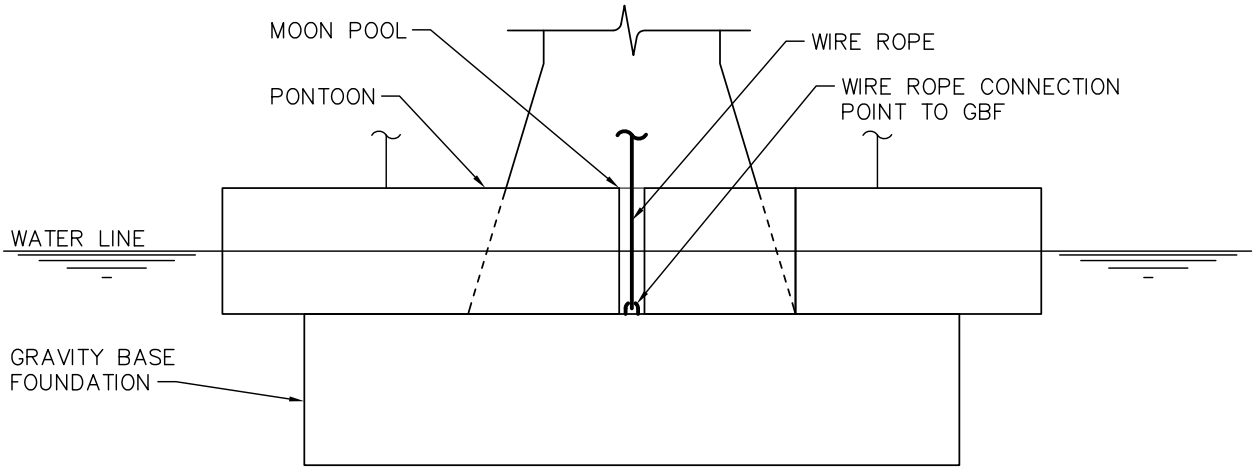

SECTION B–B
TRANSPORTING GBF

NOTE: WINCH AND DECK SHEAVES NOT SHOWN FOR CLARITY.

0 5 10 15m

SCALE 1:300

Ocean and Coastal Consultants | COWI

Visit us at www.ocean-coastal.com

DESIGNED BY: DMSA	DRAWN BY: HHRA	CHECKED BY:

DOE FRESHWATER WIND I

WINCH SYSTEM
SINGLE PART ARRANGEMENT

SCALE 1:300
DATE 05/15/13
REVISION

SKETCH NO.
SK-15-04

O:\A025000\A029896\3_Pdoc\CAD\Task15\Sk-02.dwg Sk-04 Hajim H. Ramirez Thu, 09 May 2013 - 9:49am

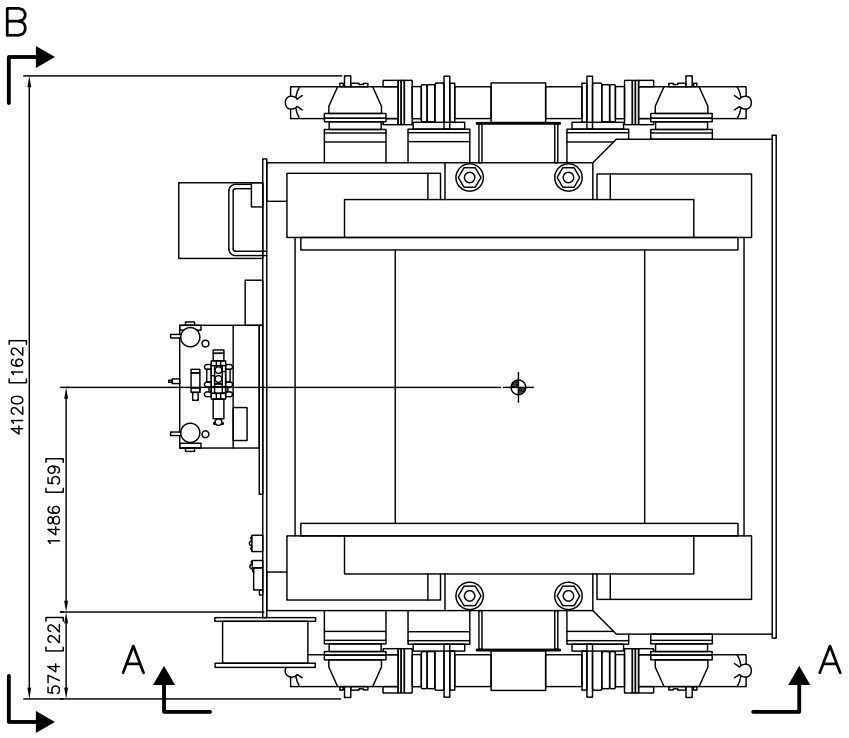

PLAN VIEW

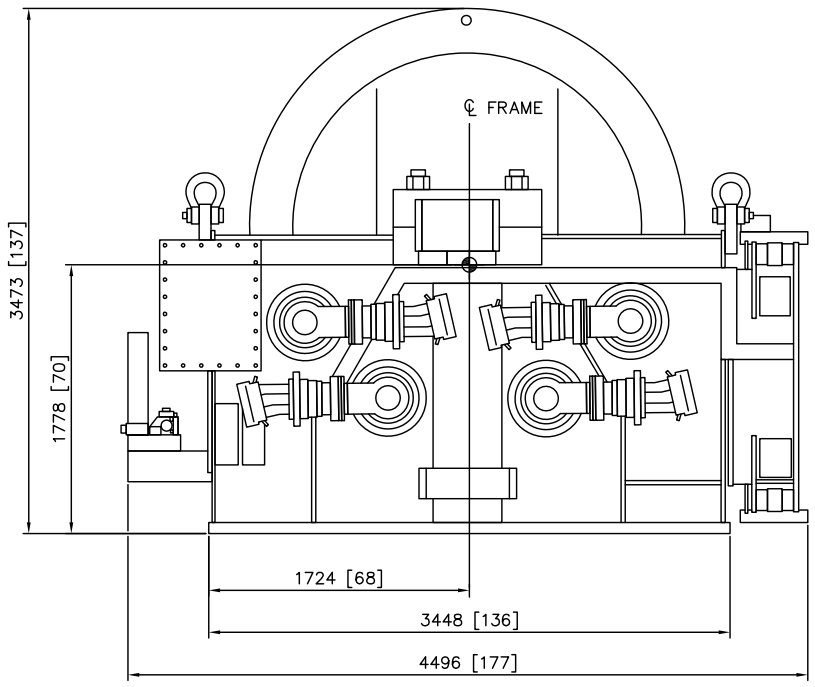

ELEVATION A–A

0 0,5 1 2m

SCALE 1:50

NOTES:

1. DIMENSIONS ARE IN mm [INCH].
2. MINIMUM CLEARANCE REQUIRED ON BOTH SIDES OF WINCH IS 457 [18].

Ocean and Coastal Consultants | COWI

Visit us at www.ocean-coastal.com

DESIGNED BY: DMSA	DRAWN BY: HHRA	CHECKED BY:

DOE FRESHWATER WIND I

WINCH USED IN TRANSPORTING GRAVITY BASED FOUNDATION

SCALE 1:50	REVISION
DATE 05/15/13	
SKETCH NO. SK-15-05	

O:\A025000\A029896\3_Pdoc\CAD\Task15\Sk-05.dwg Sk-05 Hajim H. Ramirez Thu, 09 May 2013 - 9:46am

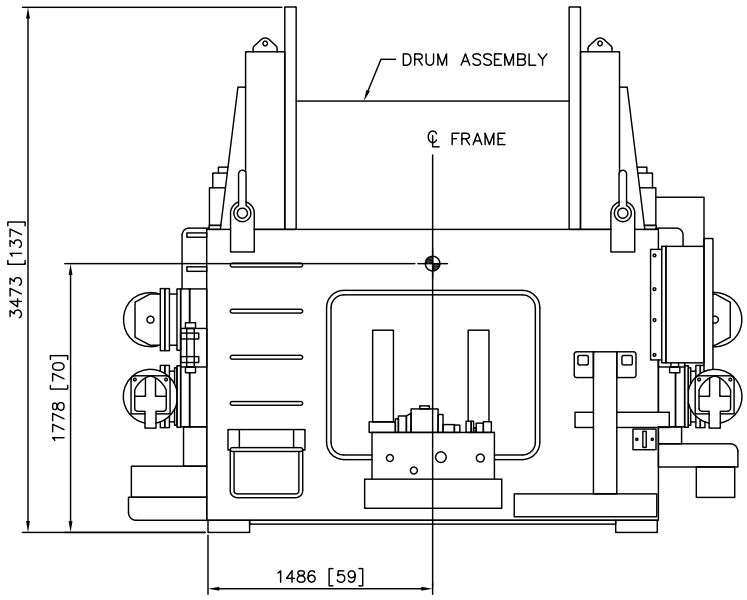

NOTE:

DIMENSIONS ARE IN mm [INCH].

ELEVATION B–B

0 0,5 1 2m

SCALE 1:50

O:\A025000\A029896\3_Pdoc\CAD\Task15\Sk-05.dwg Sk-06 Hajim H. Ramirez Thu, 09 May 2013 - 9:47am

Ocean and Coastal Consultants | COWI

Visit us at www.ocean-coastal.com

DESIGNED BY: DMSA	DRAWN BY: HHRA	CHECKED BY:

DOE FRESHWATER WIND I

WINCH USED IN TRANSPORTING GRAVITY BASED FOUNDATION – ELEVATION

SCALE 1:50

DATE 05/15/13

REVISION

SKETCH NO. SK-15-06

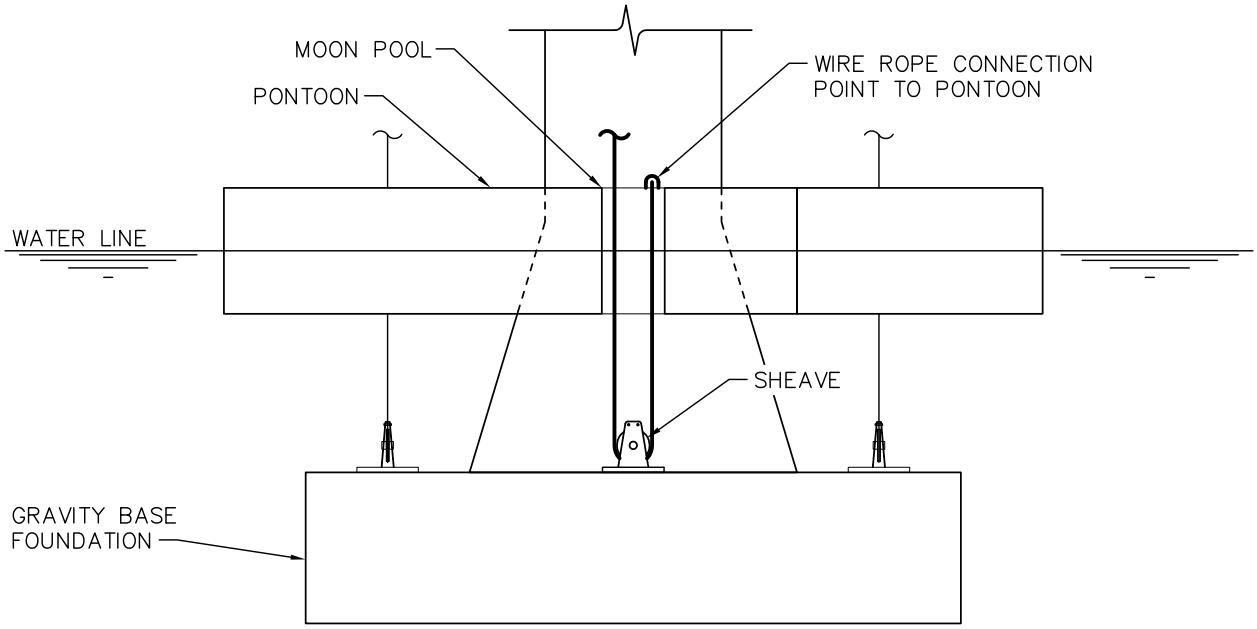

SECTION B–B
LIFTING/LOWERING GBF

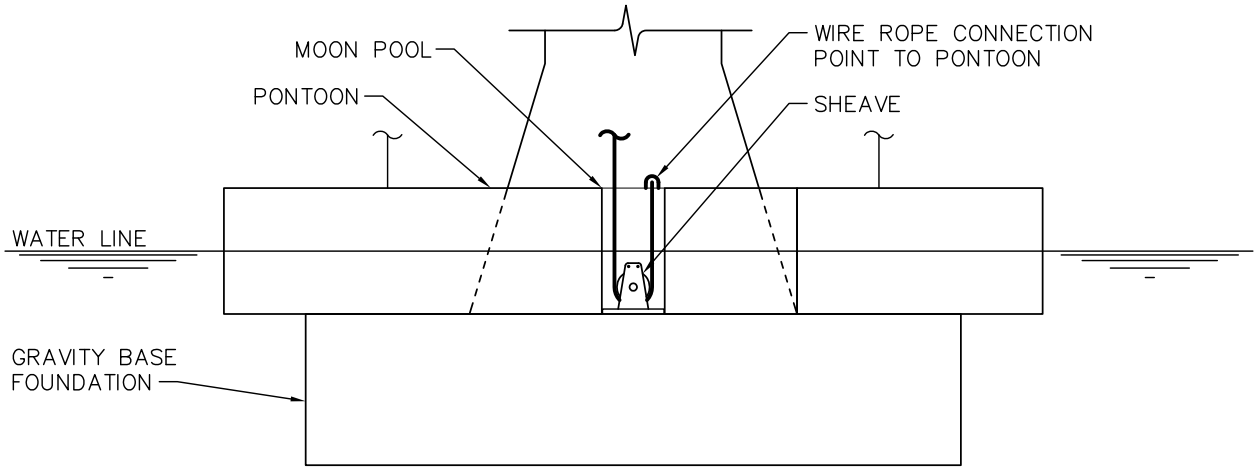

SECTION B–B
TRANSPORTING GBF

NOTE: WINCH AND DECK SHEAVES NOT SHOWN FOR CLARITY.

0 5 10 15m

SCALE 1:300

Ocean and Coastal Consultants | COWI

Visit us at www.ocean-coastal.com

DESIGNED BY: DMSA	DRAWN BY: HHRA	CHECKED BY:

DOE FRESHWATER WIND I

WINCH SYSTEM
TWO PART ARRANGEMENT

SCALE 1:300
DATE 05/15/13
REVISION

SKETCH NO.
SK-15-07

O:\A025000\A029896\3_Pdoc\CAD\Task15\Sk-07.dwg Sk-07 Hajim H. Ramirez Thu, 09 May 2013 - 9:46am

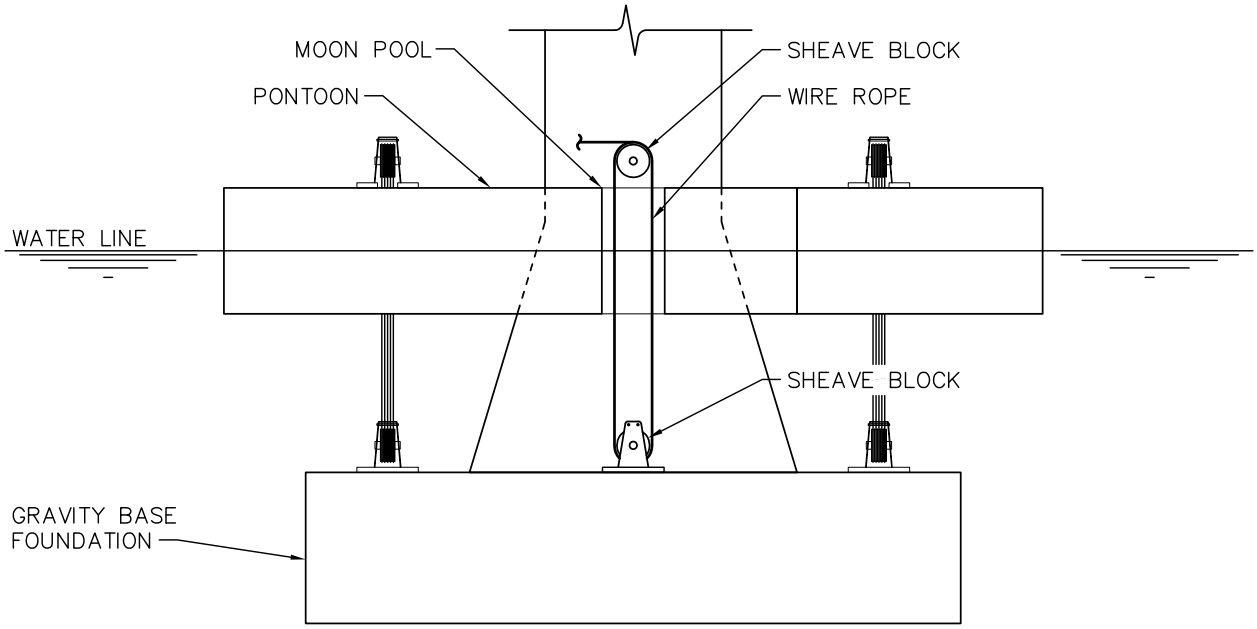

SECTION B–B
LIFTING/LOWERING GBF

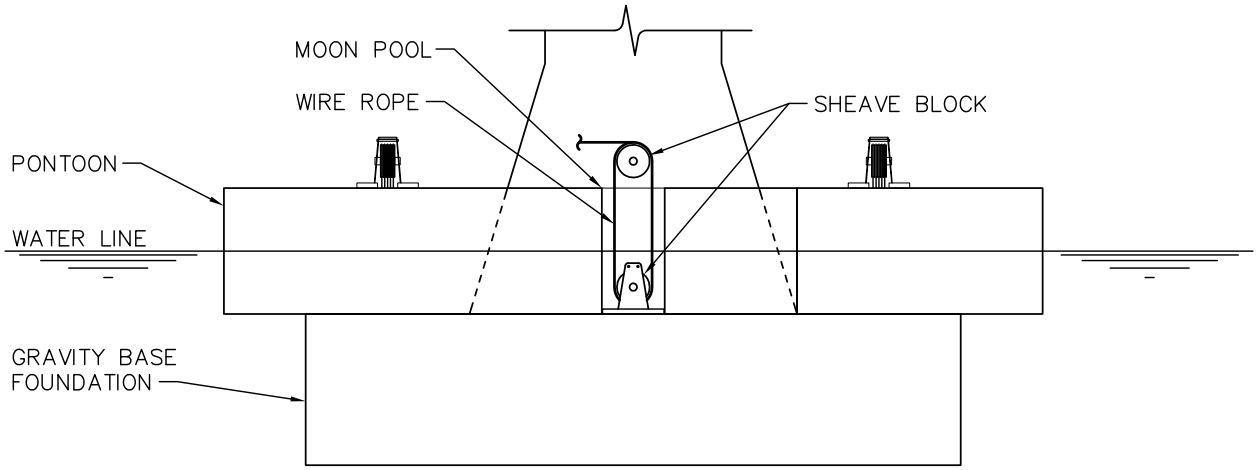

SECTION B–B
TRANSPORTING GBF

NOTE: WINCH AND DECK SHEAVES NOT SHOWN FOR CLARITY.

0 5 10 15m

SCALE 1:300

Ocean and Coastal Consultants | COWI

Visit us at www.ocean-coastal.com

DESIGNED BY: DMSA	DRAWN BY: HHRA	CHECKED BY:

DOE FRESHWATER WIND I

WINCH SYSTEM
MULTI–FALL ARRANGEMENT

SCALE 1:300
DATE 05/15/13
REVISION

SKETCH NO.
SK–15–08

O:\A025000\A029896\3_Pdoc\CAD\Task15\Sk-07.dwg Sk-08 Hajim H. Ramirez Thu, 09 May 2013 - 9:46am

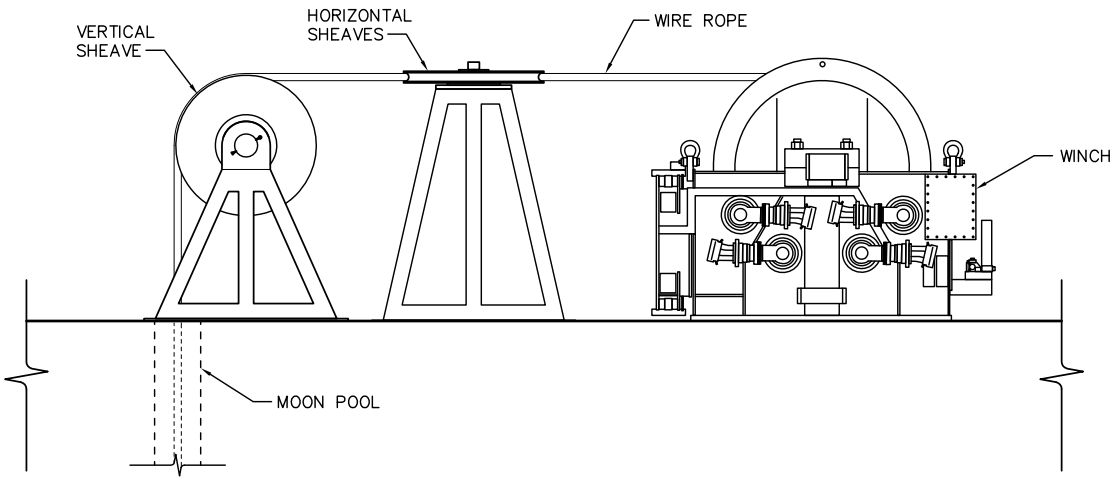

ELEVATION

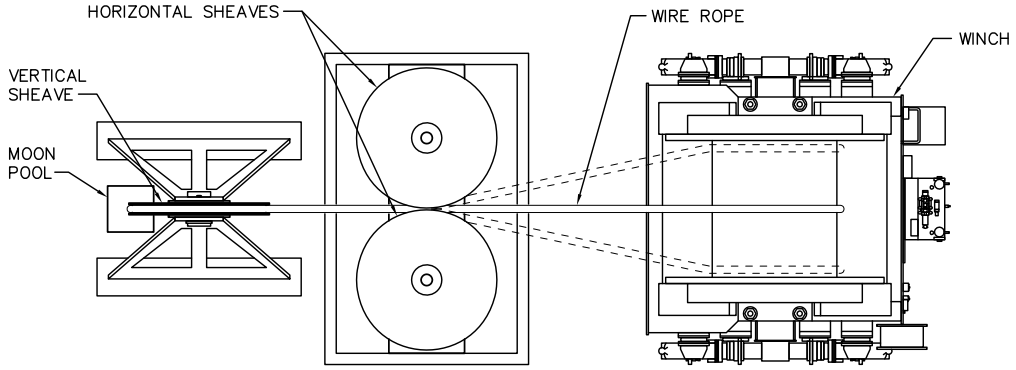

PLAN

0 1 2 4m

SCALE 1:100

Ocean and Coastal Consultants | COWI

Visit us at www.ocean-coastal.com

DESIGNED BY: DMSA	DRAWN BY: HHRA	CHECKED BY:

DOE FRESHWATER WIND I

SHEAVE SYSTEM – OPTION 1

SCALE 1:50

DATE 05/15/13

REVISION

SKETCH NO. SK-15-09

O:\A025000\A029896\3_Pdoc\CAD\Task15\Sk-09.dwg Sk-09 Hajim H. Ramirez Thu, 09 May 2013 - 9:44am

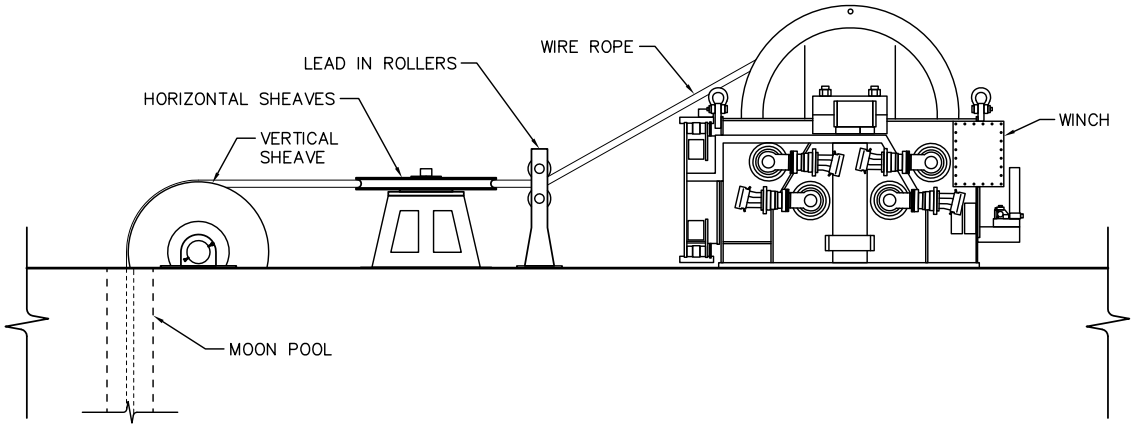

ELEVATION

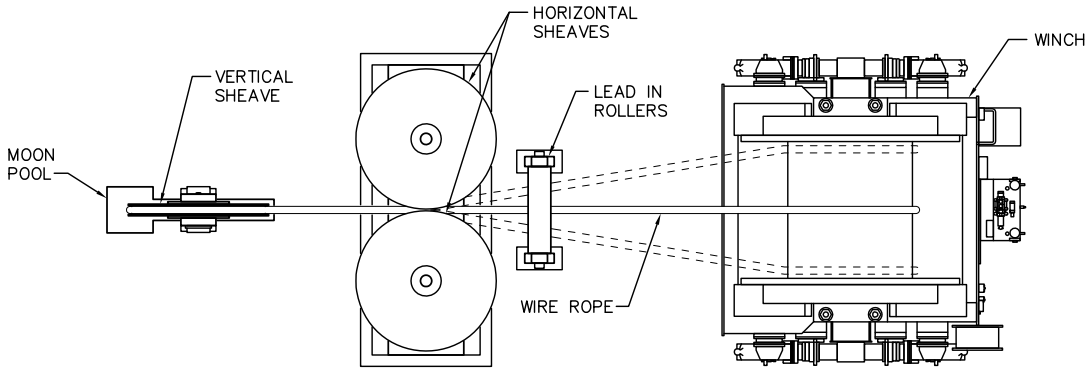

PLAN

0 1 2 4m

SCALE 1:100

Ocean and Coastal Consultants | COWI

Visit us at www.ocean-coastal.com

DESIGNED BY: DMSA	DRAWN BY: HHRA	CHECKED BY:

DOE FRESHWATER WIND I

SHEAVE SYSTEM – OPTION 2

SCALE 1:100	REVISION
DATE 05/15/13	

SKETCH NO. SK-15-10

O:\A025000\A029896\3_Pdoc\CAD\Task15\Sk-09.dwg Sk-10 Hajim H. Ramirez Thu, 09 May 2013 - 9:44am

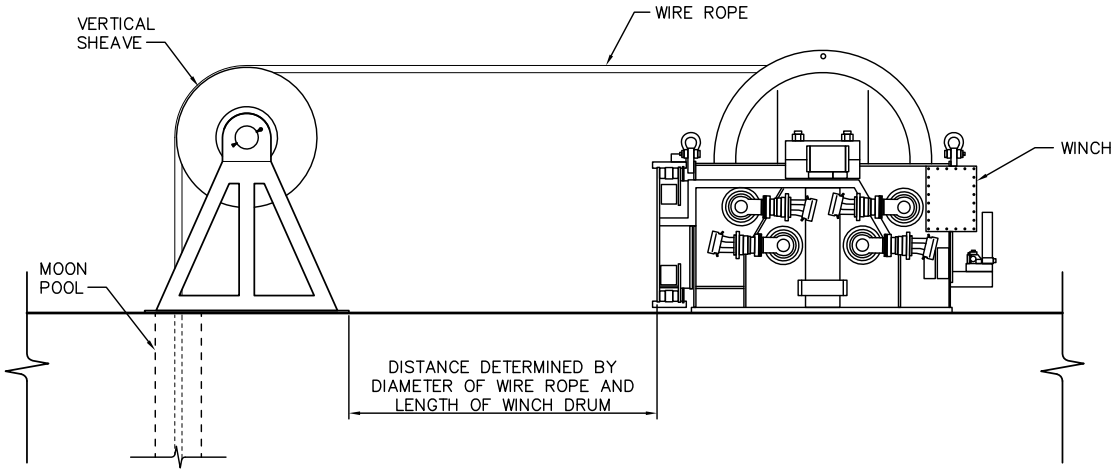

ELEVATION

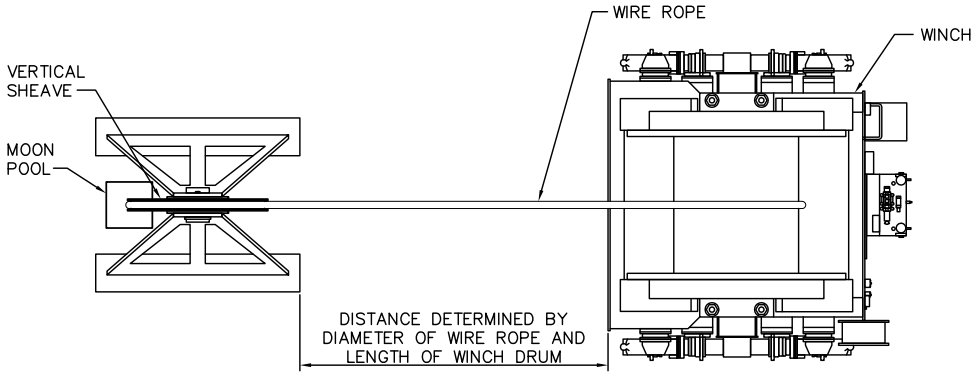

PLAN

0 1 2 4m

SCALE 1:100

Ocean and Coastal Consultants | COWI

Visit us at www.ocean-coastal.com

DESIGNED BY: DMSA	DRAWN BY: HHRA	CHECKED BY:

DOE FRESHWATER WIND I

SHEAVE SYSTEM – OPTION 3

SCALE 1:100

DATE 05/15/13

REVISION

SKETCH NO. SK-15-11

O:\A025000\A029896\3_Pdoc\CAD\Task15\Sk-09.dwg Sk-11 Hajim H. Ramirez Thu, 09 May 2013 - 9:45am

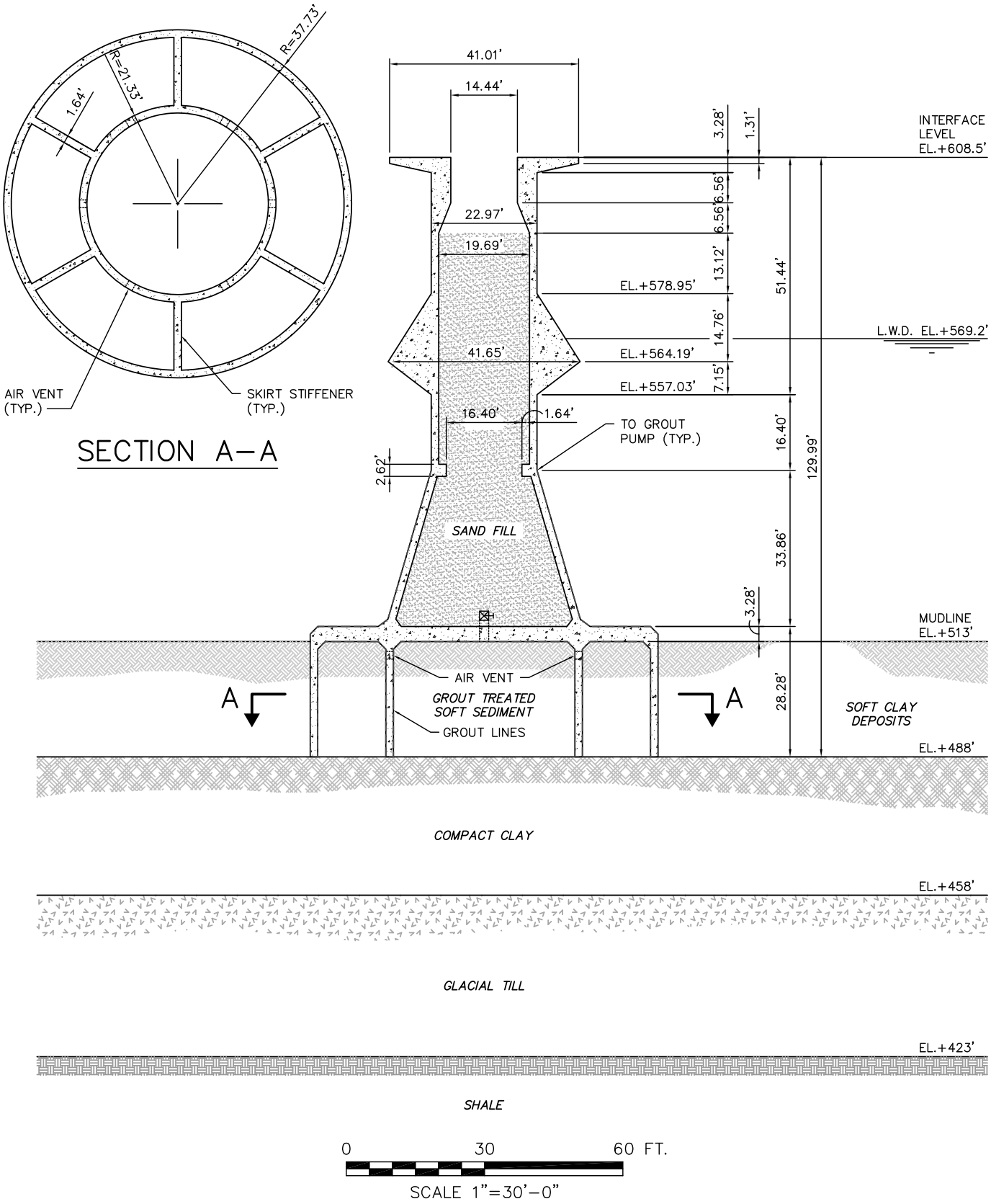

Ocean and Coastal Consultants | COWI

Visit us at www.ocean-coastal.com

DESIGNED BY: MGDY	DRAWN BY: CAMA	CHECKED BY: STWH

FRESHWATER WIND I

FOUNDATION CONCEPT 5
PENETRATION SKIRT

SCALE 1"=30'-0	REVISION
DATE 4/24/13	

SKETCH NO.
SK-16-01

O:\A025000\A029896\3_Pdoc\CAD\Task18\Sk-16-01.dwg SK-16-01 Hajim H. Ramirez Fri, 10 May 2013 - 9:19am

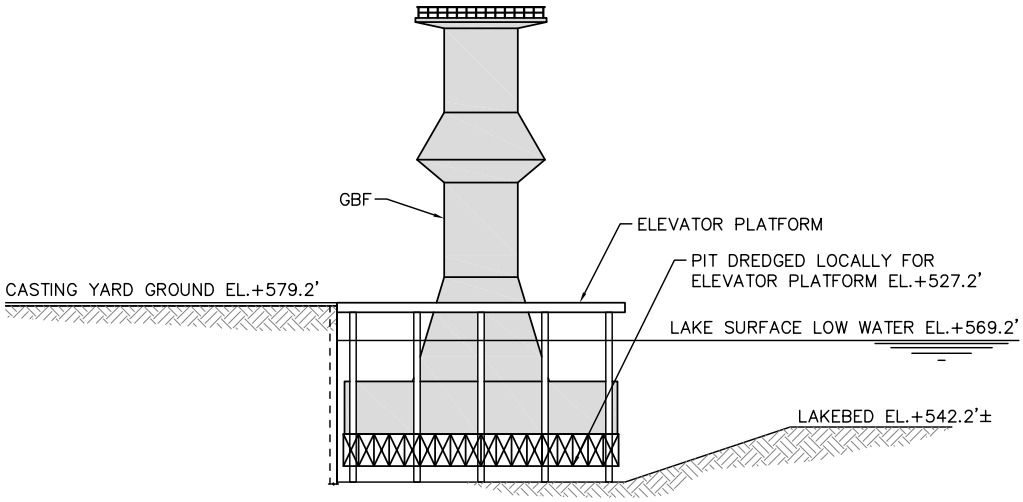

1. GBF FABRICATED IN FABRICATION YARD AND LOWERED TO LAKEBED VIA ELEVATOR PLATFORM.

ELEVATION VIEW

0 60 120 FT.

SCALE 1"=60'-0"

Ocean and Coastal Consultants | COWI

Visit us at www.ocean-coastal.com

DESIGNED BY:	DRAWN BY:	CHECKED BY:
LETO	HHRA	STWH

DOE FRESHWATER WIND

INTEGRATED TOWER AND FOUNDATION TRANSPORTATION AND INSTALLATION SEQUENCE

SCALE 1"=60'-0"

DATE 08/01/13

REVISION

SKETCH NO. SK-17-01

O:\A025000\A029896\3_Pdoc\CAD\Task17\Sk-01.dwg Sk-01 Hajim H. Ramirez Tue, 10 Sep 2013 - 4:28pm

NOTES:

1. ELEVATOR AND ELEVATOR PLATFORM NOT SHOWN FOR CLARITY.
2. GBF WILL BE FIRST TRANSPORTED TO IN WATER STAGING AREA WITHIN BREAKWATER AFTER LAUNCHING.

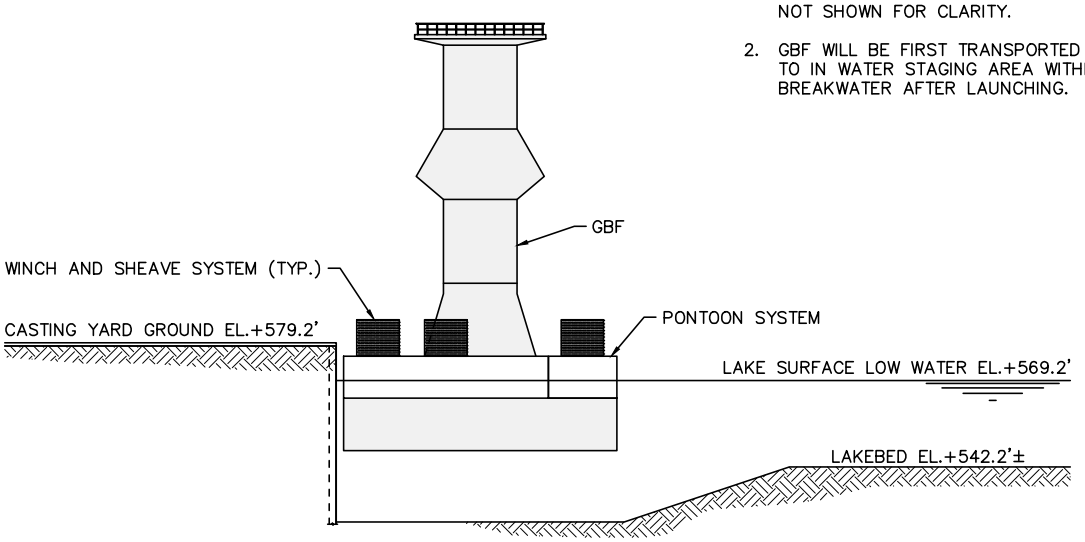

2. PONTOON SYSTEM AND WINCHES LIFT GBF TO TOW POSITION.

ELEVATION VIEW

0 60 120 FT.

SCALE 1"=60'-0"

Ocean and Coastal Consultants / COWI Visit us at www.ocean-coastal.com	DOE FRESHWATER WIND		SCALE 1"=60'-0" DATE 08/01/13	REVISION
DESIGNED BY: LETO / DRAWN BY: HHRA / CHECKED BY: STWH	INTEGRATED TOWER AND FOUNDATION TRANSPORTATION AND INSTALLATION SEQUENCE		SKETCH NO. SK-17-02	

O:\A025000\A029896\3_Pdoc\CAD\Task17\Sk-01.dwg Sk-02 Hajim H. Ramirez Tue, 05 Nov 2013 - 2:36pm

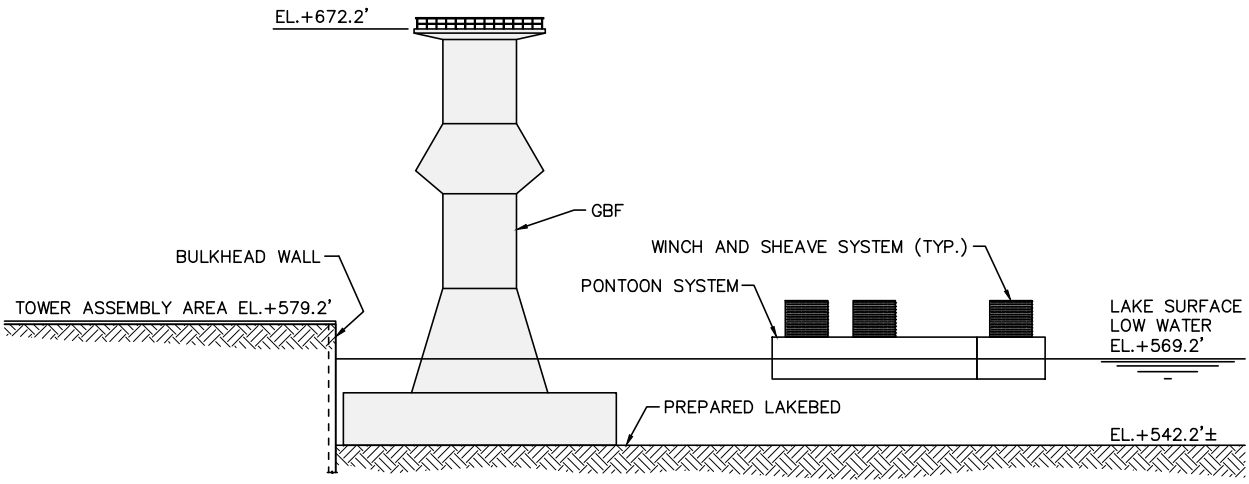

3. PONTOON SYSTEM LOWERS GBF TO PREPARED LAKEBED ADJACENT TO ASSEMBLY AREA BULKHEAD WALL. PONTOON SYSTEM IS REMOVED AND PREPARED FOR NEXT GBF.

ELEVATION VIEW

0 60 120 FT.

SCALE 1"=60'-0"

Ocean and Coastal Consultants | COWI

Visit us at www.ocean-coastal.com

DESIGNED BY: LETO	DRAWN BY: HHRA	CHECKED BY: STWH

DOE FRESHWATER WIND

INTEGRATED TOWER AND FOUNDATION TRANSPORTATION AND INSTALLATION SEQUENCE

SCALE 1"=60'-0"

DATE 08/01/13

REVISION

SKETCH NO. SK-17-03

O:\A025000\A029896\3_Pdoc\CAD\Task17\Sk-01.dwg Sk-03 Hajim H. Ramirez Tue, 05 Nov 2013 - 2:37pm

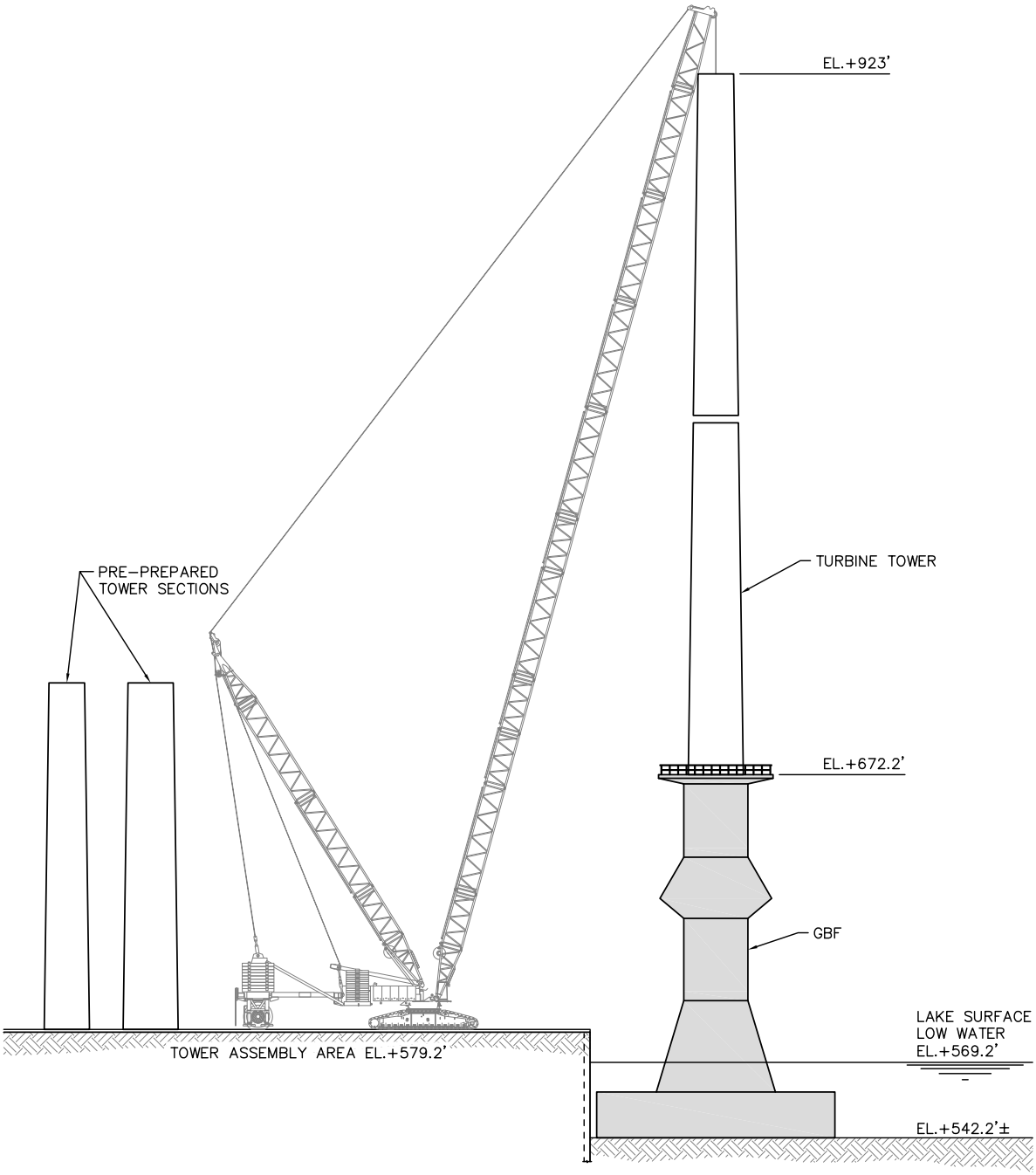

4. TURBINE TOWER INSTALLED IN SECTIONS VIA LAND-BASED CRANE. TOWER COMMISSIONED PIER SIDE, PRIOR TO DEPLOYMENT OFFSHORE.

ELEVATION VIEW

0 60 120 FT.

SCALE 1"=60'-0"

Ocean and Coastal Consultants | COWI

Visit us at www.ocean-coastal.com

DESIGNED BY: LETO	DRAWN BY: HHRA	CHECKED BY: STWH

DOE FRESHWATER WIND

INTEGRATED TOWER AND FOUNDATION TRANSPORTATION AND INSTALLATION SEQUENCE

SCALE 1"=60'-0"

DATE 08/01/13

REVISION

SKETCH NO. SK-17-04

O:\A025000\A029896\3_Pdoc\CAD\Task17\Sk-01.dwg Sk-04 Hajim H. Ramirez Tue, 10 Sep 2013 - 4:33pm

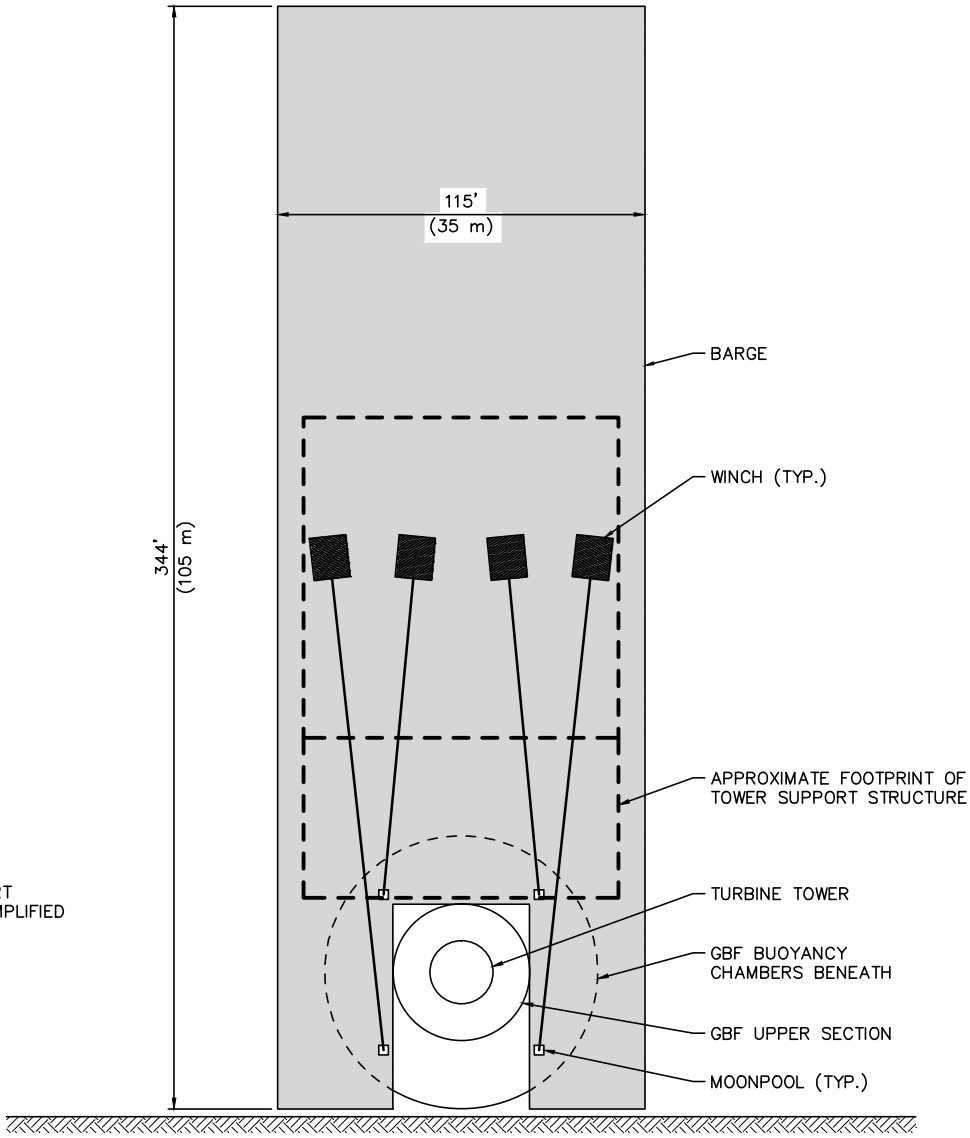

NOTE:

TOWER SUPPORT STRUCTURE SIMPLIFIED FOR CLARITY.

TOWER ASSEMBLY AREA

5. TURBINE TOWER/GBF ARE SURROUNDED BY A U-SHAPED BARGE. UPPER SECTION OF GBF AND TOWER EXTEND ABOVE BARGE DECK.

PLAN VIEW

0 60 120 FT.

SCALE 1"=60'-0"

Ocean and Coastal Consultants | COWI

Visit us at www.ocean-coastal.com

DESIGNED BY: LETO	DRAWN BY: HHRA	CHECKED BY: STWH

DOE FRESHWATER WIND

INTEGRATED TOWER AND FOUNDATION TRANSPORTATION AND INSTALLATION SEQUENCE

SCALE 1"=60'-0"

DATE 08/01/13

REVISION

SKETCH NO. SK-17-05

O:\A025000\A029896\3_Pdoc\CAD\Task17\Sk-01.dwg Sk-05 Hajim H. Ramirez Mon, 04 Nov 2013 - 10:03am

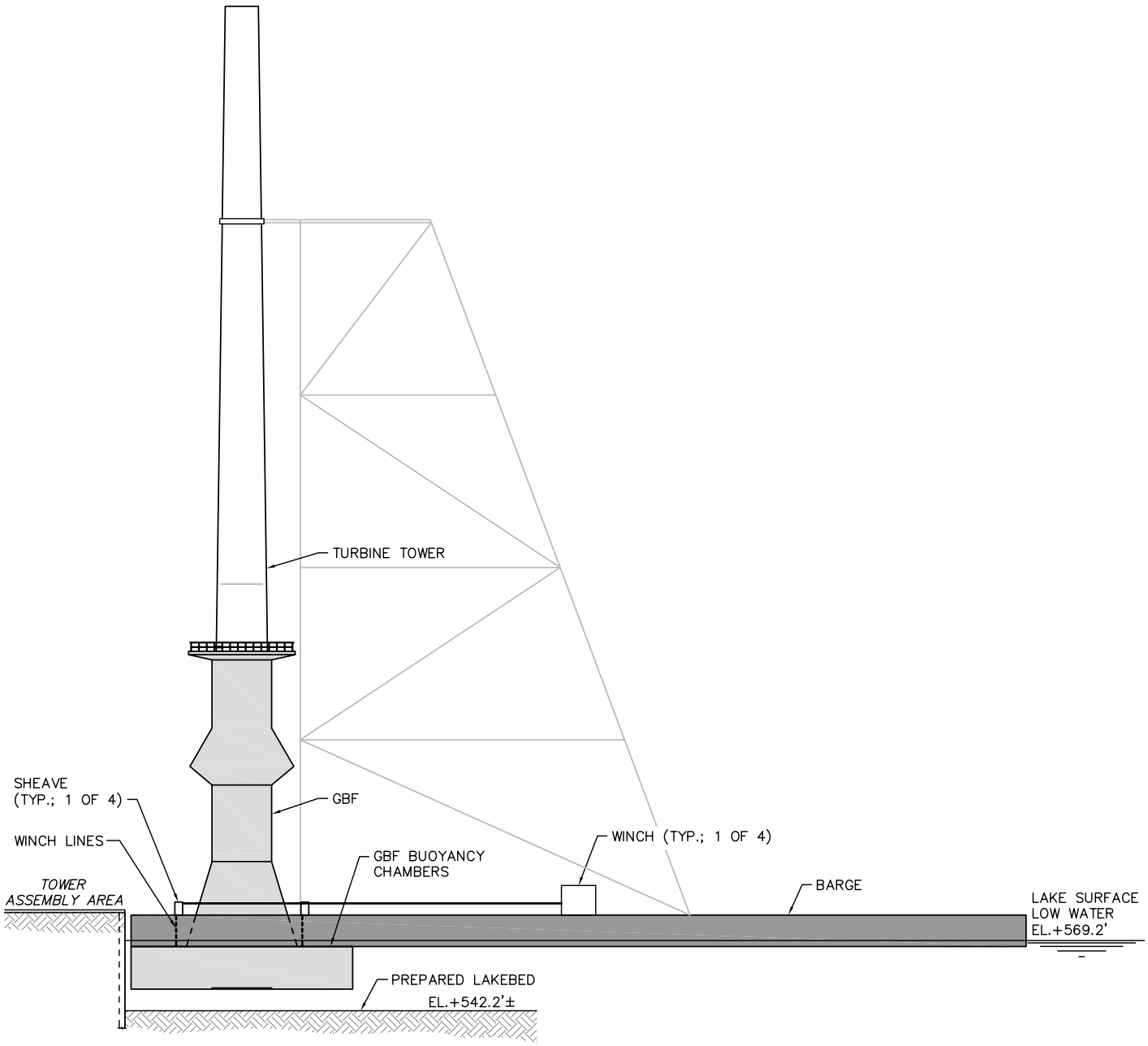

6. GBF TOWER/FOUNDATION ASSEMBLY IS LIFTED TO THE TOW POSITION VIA FOUR (4) BARGE – MOUNTED WINCHES.

ELEVATION VIEW – WINCH SYSTEM

0 60 120 FT.

SCALE 1"=60'–0"

Ocean and Coastal Consultants | COWI

Visit us at www.ocean–coastal.com

DESIGNED BY:	DRAWN BY:	CHECKED BY:
LETO	HHRA	STWH

DOE FRESHWATER WIND

INTEGRATED TOWER AND FOUNDATION TRANSPORTATION AND INSTALLATION SEQUENCE

SCALE 1"=60'–0"

DATE 08/01/13

REVISION

SKETCH NO. SK–17–06

O:\A025000\A029896\3_Pdoc\CAD\Task17\Sk-01.dwg Sk-06 Hajim H. Ramirez Tue, 10 Sep 2013 – 4:34pm

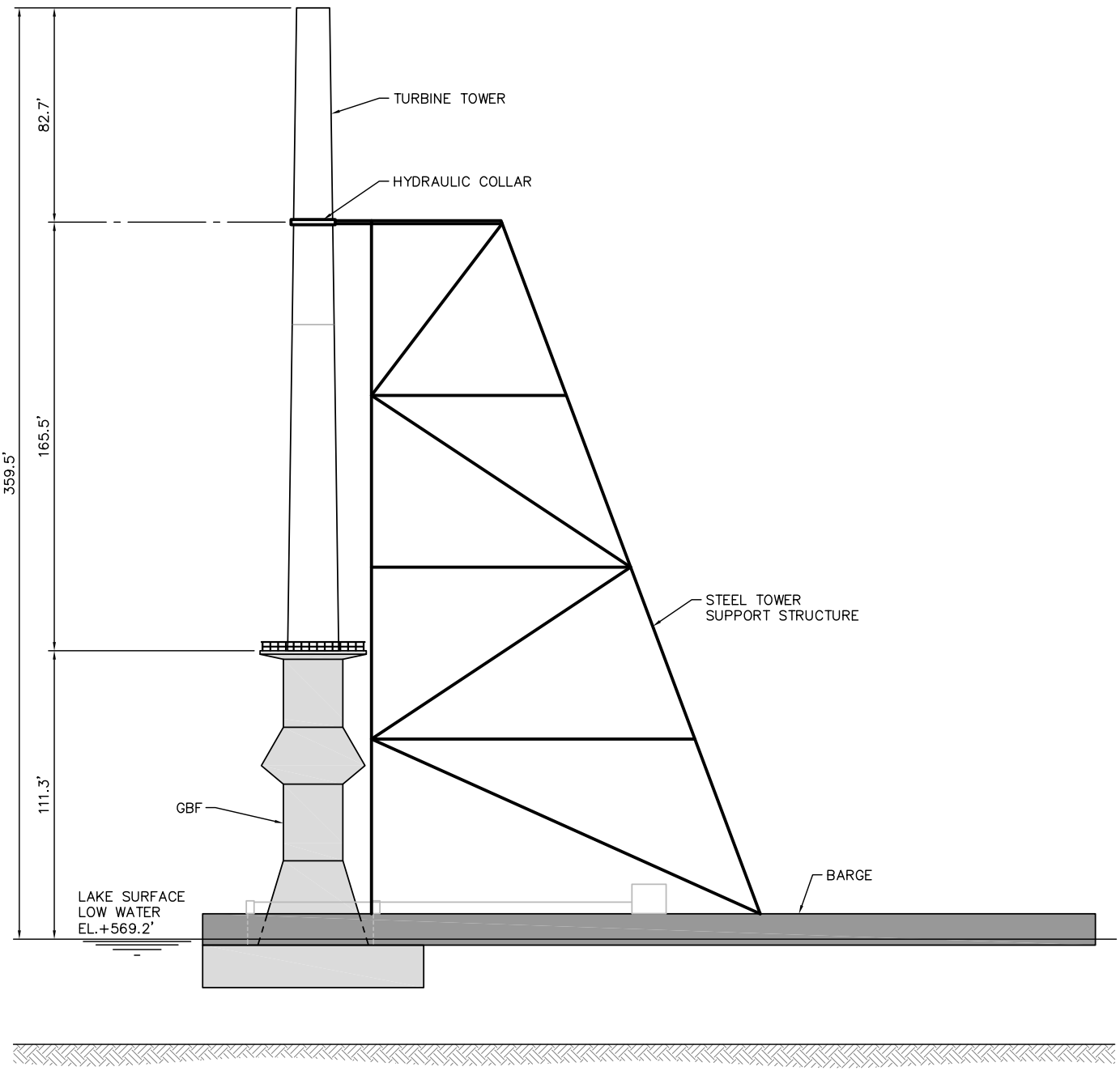

7. THE TURBINE TOWER IS BRACED BY A TOWER SUPPORT STRUCTURE FITTED WITH A HYDRAULIC COLLAR, ENGAGED AT DOCKSIDE.

ELEVATION VIEW – COLLARED SUPPORT STRUCTURE

0 60 120 FT.

SCALE 1"=60'-0"

Ocean and Coastal Consultants COWI Visit us at www.ocean-coastal.com	DOE FRESHWATER WIND	SCALE 1"=60'-0" DATE 08/01/13	REVISION
DESIGNED BY: LETO / DRAWN BY: HHRA / CHECKED BY: STWH	INTEGRATED TOWER AND FOUNDATION TRANSPORTATION AND INSTALLATION SEQUENCE	SKETCH NO. SK-17-07	

O:\A025000\A029896\3_Pdoc\CAD\Task17\Sk-01.dwg Sk-07 Hajim H. Ramirez Tue, 10 Sep 2013 - 4:35pm

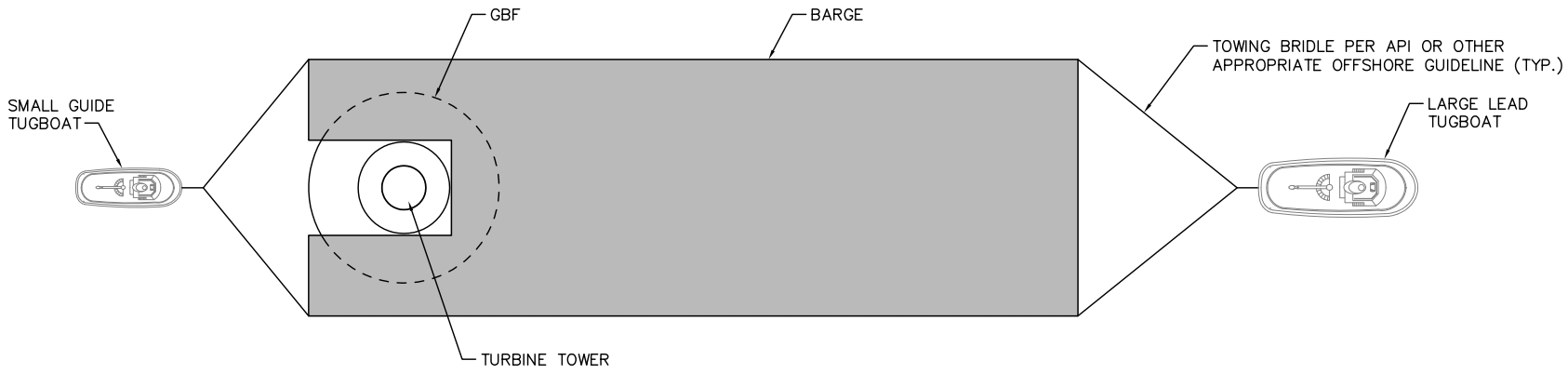

NOTE: TOWER SUPPORT STRUCTURE, WINCHES, SHEAVES, AND WINCH LINES NOT SHOWN FOR CLARITY.

8. TUGS TOW INTEGRATED TOWER/GBF FROM TOWER ASSEMBLY AREA TO THE PROJECT SITE.

PLAN VIEW

0 80 160 FT.

SCALE 1"=80'-0"

Ocean and Coastal Consultants | COWI

Visit us at www.ocean-coastal.com

DESIGNED BY:	DRAWN BY:	CHECKED BY:
LETO	HHRA	STWH

DOE FRESHWATER WIND

INTEGRATED TOWER AND FOUNDATION TRANSPORTATION AND INSTALLATION SEQUENCE

SCALE 1"=80'-0"

DATE 08/03/13

REVISION

SKETCH NO. SK-17-08

O:\A025000\A029896\3_Pdoc\CAD\Task17\Sk-01.dwg Sk-08 Hajim H. Ramirez Tue, 10 Sep 2013 - 4:36pm

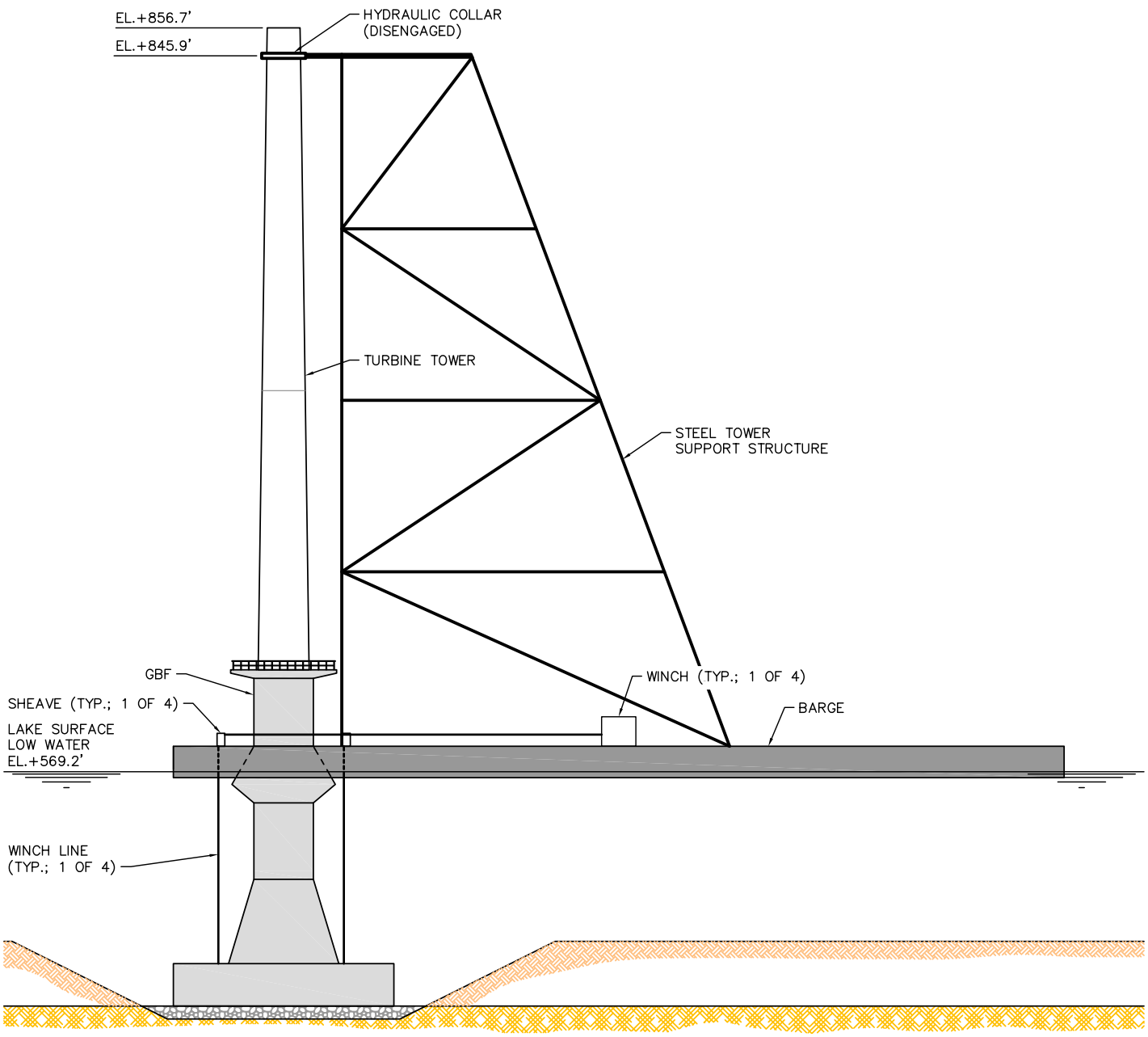

9. AT INSTALLATION LOCATION, COLLAR IS DISENGAGED AND WINCHES LOWER GBF/TOWER TO PREPARED LAKEBED.

ELEVATION VIEW

0 60 120 FT.

SCALE 1"=60'-0"

Ocean and Coastal Consultants | COWI

Visit us at www.ocean-coastal.com

DESIGNED BY: LETO	DRAWN BY: HHRA	CHECKED BY: STWH

DOE FRESHWATER WIND

INTEGRATED TOWER AND FOUNDATION TRANSPORTATION AND INSTALLATION SEQUENCE

SCALE 1"=60'-0"

DATE 08/01/13

REVISION

SKETCH NO. SK-17-09

O:\A025000\A029896\3_Pdoc\CAD\Task17\Sk-01.dwg Sk-09 Hajim H. Ramirez Tue, 10 Sep 2013 - 4:39pm

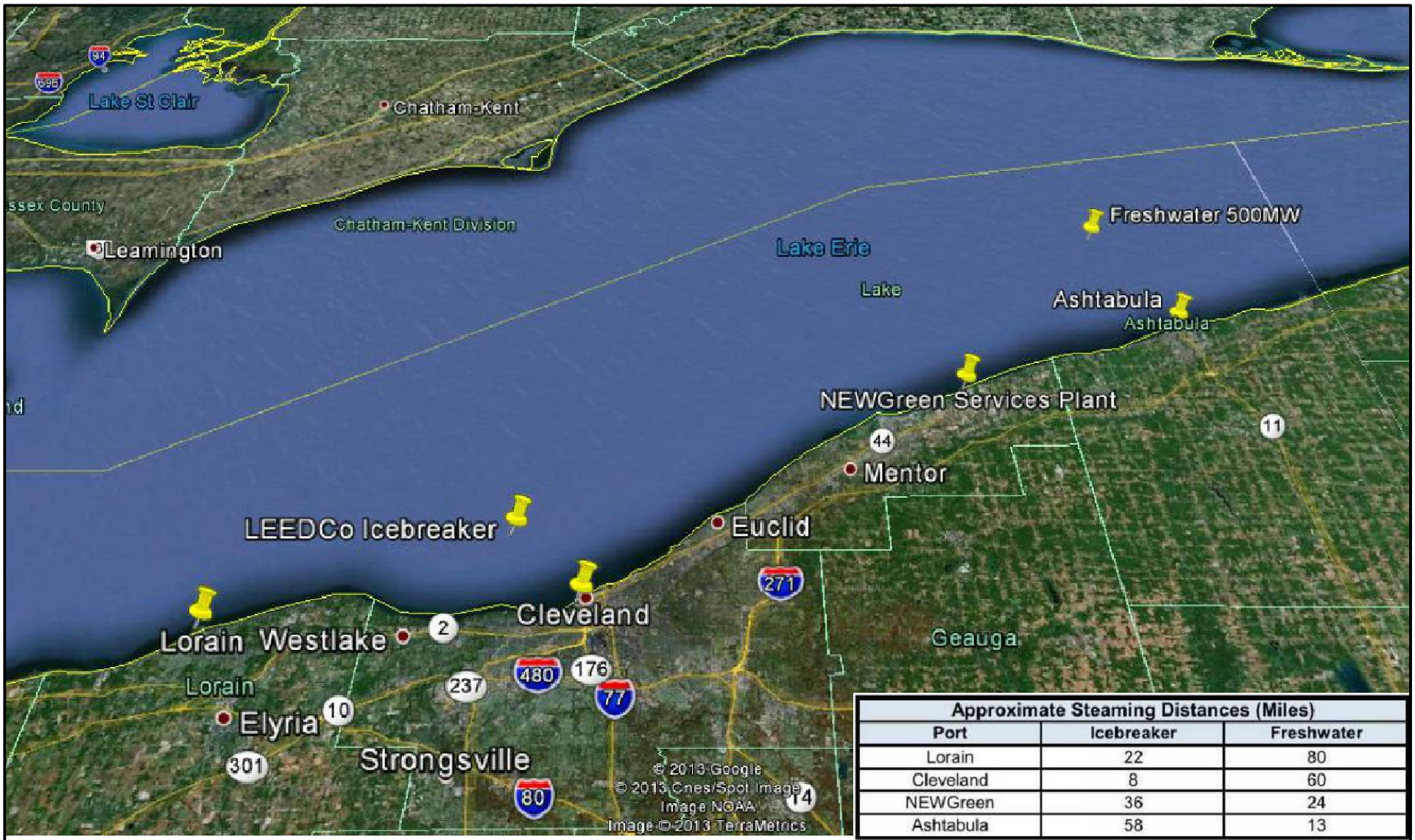

Approximate Steaming Distances (Miles)		
Port	Icebreaker	Freshwater
Lorain	22	80
Cleveland	8	60
NEWGreen	36	24
Ashtabula	58	13

miles 50
km 80

Ocean and Coastal Consultants | COWI

Visit us at www.ocean-coastal.com

DESIGNED BY: BRCO | DRAWN BY: HHRA | CHECKED BY:

FRESHWATER WIND I

PROPOSED PROJECTS AND POTENTIAL PORTS

SCALE AS NOTED | DATE 05/10/13 | REVISION

SKETCH NO. SK-18-01

O:\A025000\A029896\3_Pdoc\CAD\Task18\Sk-18-01.dwg Layout1 Rey T. Buzeta Tue, 26 Nov 2013 - 11:32am

Appendix 3: Opinion of Probable Cost

GBF Fabrication Yard OPC

See attached OPC Summary.

GBF Transportation OPC

See attached OPC Summary.

GBF Installation OPC

See attached OPC Summary.

Semi-Floating GBF Fabrication OPC

See attached OPC Summary.

Penetration Skirt GBF OPC

See attached OPC Summary.

Barge-Winch OPC

See attached OPC Summary.

Integrated Tower OPCs

See attached OPC Summaries.

OPINION OF PROBABLE COSTS

OCC PROJECT NO: 211080
OCC PROJECT NAME: Offshore Wind System Optimization for Shallow Water: Lake Erie
Fabrication Yard Construction
CLIENT: U.S. DOE
SITE LOCATION: Port of Cleveland, OH - Approx: 41°30.2' N, 81°42.5'W
Operated by: Cleveland Cuyahoga County Port Authority

PREPARED BY: BRCO, JOBA
DATE: 4/Oct/2013
CHECKED BY:

	WORK ITEM DESCRIPTION	OPC PRICE (LUMP SUM)
	MOBILIZATION AND DEMOBILIZATION	$1,332,000.00
	WORK ITEM 1 - PILE DRIVING	$16,186,000.00
	WORK ITEM 2 - PILE CAP	$21,007,000.00
	WORK ITEM 3 - SYNCROLIFT	$27,532,000.00
	WORK ITEM 4 - JACKING AND SKIDDING EQUIPMENT	$34,044,000.00
	WORK ITEM 5 - SURFACE TREATMENT	$1,678,000.00
	WORK ITEM 6 - SECURITY	$430,000.00
	TOTAL	**$102,209,000.00**

OPINIONS OF PROBABLE COST INCLUDE THE FOLLOWING MARK-UPS:

GENERAL CONDITIONS:	**10%**
OVERHEAD:	**10%**
PROFIT:	**7.5%**
SALES TAX:	**0%**
INFLATION:	**0%**
CONTINGENCY:	**0%**

OPINION OF PROBABLE COSTS

OCC PROJECT NO: 211080.0
OCC PROJECT NAME: Shallow Water Offshore Wind System Optimization for the Great Lakes
Transportation of GBF's from Staging Area to Installation Site
CLIENT: U.S. DOE
SITE LOCATION: Port of Cleveland, OH - Approx: 41°30.2' N, 81°42.5'W
Operated by: Cleveland Cuyahoga County Port Authority

PREPARED BY: JOBA
DATE: 4-Oct-13
CHECKED BY:

	WORK ITEM DESCRIPTION	OPC PRICE (LUMP SUM)
	TRANSPORTATION OF GBF'S	$6,816,000.00

TRANSPORTATION TOTAL (100 FOUNDATIONS) **$6,816,000.00**
TRANSPORTATION TOTAL (EA.) $68,160.00

OPINIONS OF PROBABLE COST INCLUDE THE FOLLOWING MARK-UPS:

GENERAL CONDITIONS:	**10%**
OVERHEAD:	**10%**
PROFIT:	**7.5%**
SALES TAX:	**0%**
INFLATION:	**0%**
CONTINGENCY:	**0%**

OPINION OF PROBABLE COSTS

OCC PROJECT NO: 211080.0
OCC PROJECT NAME: Shallow Water Offshore Wind System Optimization for the Great Lakes
Installation of GBF's
CLIENT: U.S. DOE
SITE LOCATION: Port of Cleveland, OH - Approx: 41°30.2' N, 81°42.5'W
Operated by: Cleveland Cuyahoga County Port Authority

PREPARED BY: JOBA
DATE: 4-Oct-13
CHECKED BY:

SEMI-FLOATING GBF:

	WORK ITEM DESCRIPTION	OPC PRICE (LUMP SUM)
	MOBILIZATION AND DEMOBILIZATION	$1,979,000.00
	SEAFLOOR PREPARATION	$54,854,000.00
	INSTALL GBF	$109,176,000.00

INSTALLATION TOTAL (100 FOUNDATIONS) $166,009,000.00
INSTALLATION TOTAL (EA.) $1,660,090.00

SKIRT FOUNDATION GBF:

	WORK ITEM DESCRIPTION	OPC PRICE (LUMP SUM)
	MOBILIZATION AND DEMOBILIZATION	$3,280,000.00
	INSTALL GBF	$185,512,000.00

INSTALLATION TOTAL (100 FOUNDATIONS) $188,792,000.00
INSTALLATION TOTAL (EA.) $1,887,920.00

OPINIONS OF PROBABLE COST INCLUDE THE FOLLOWING MARK-UPS:

GENERAL CONDITIONS:	**10%**
OVERHEAD:	**10%**
PROFIT:	**7.5%**
SALES TAX:	**0%**
INFLATION:	**0%**
CONTINGENCY:	**0%**

OPINION OF PROBABLE COSTS

OCC PROJECT NO: 211080
OCC PROJECT NAME: Shallow Water Offshore Wind System Optimization for the Great Lakes
Fabrication of Semi-Floating Gravity Based Foundation
CLIENT: U.S. DOE
SITE LOCATION: Port of Cleveland, OH - Approx: 41°30.2' N, 81°42.5'W
Operated by: Cleveland Cuyahoga County Port Authority

PREPARED BY: BRCO, JOBA, LETO
DATE: 4-Oct-13
CHECKED BY:

	WORK ITEM DESCRIPTION	OPC PRICE (LUMP SUM)
	MOBILIZATION AND DE-MOBILIZATION	$583,000.00
	WORK ITEM 1 - SITE EQUIPMENT	$4,579,000.00
	WORK ITEM 2 - WINTER STANDBY	$764,000.00
	WORK ITEM 3 - SKIDDING	$3,602,000.00
	WORK ITEM 4 - GBF PREFABRICATION	$115,122,000.00
	WORK ITEM 5 - GBF POSITION 1	$15,790,000.00
	WORK ITEM 6 - GBF POSITION 2	$32,025,000.00
	WORK ITEM 7 - GBF POSITION 3	$35,467,000.00
	WORK ITEM 8 - GBF POSITION 4	$21,548,000.00
	WORK ITEM 9 - GBF FINAL ASSEMBLY	$2,235,000.00
	WORK ITEM 10 - HARBOR STAGING	$1,965,000.00

FABRICATION TOTAL (100 FOUNDATIONS) $233,680,000.00
FABRICATION TOTAL (EA.) $2,336,800.00

OPINIONS OF PROBABLE COST INCLUDE THE FOLLOWING MARK-UPS:

GENERAL CONDITIONS:	**10%**
OVERHEAD:	**10%**
PROFIT:	**7.5%**
SALES TAX:	**0%**
INFLATION:	**0%**
CONTINGENCY:	**0%**

OPINION OF PROBABLE COSTS

OCC PROJECT NO: 211080
OCC PROJECT NAME: Shallow Water Offshore Wind System Optimization for the Great Lakes
Fabrication of Gravity Based Foundation with Penetration Skirt
CLIENT: U.S. DOE
SITE LOCATION: Port of Cleveland, OH - Approx: 41°30.2' N, 81°42.5'W
Operated by: Cleveland Cuyahoga County Port Authority

PREPARED BY: BRCO, JOBA, LETO
DATE: 4-Oct-13
CHECKED BY:

	WORK ITEM DESCRIPTION	OPC PRICE (LUMP SUM)
	MOBILIZATION AND DE-MOBILIZATION	$582,000.00
	WORK ITEM 1 - SITE EQUIPMENT	$4,579,000.00
	WORK ITEM 2 - WINTER STANDBY	$764,000.00
	WORK ITEM 3 - SKIDDING	$3,002,000.00
	WORK ITEM 4 - GBF PREFABRICATION	$108,424,000.00
	WORK ITEM 5 - GBF POSITION 1	$55,626,000.00
	WORK ITEM 6 - GBF POSITION 2	$35,201,000.00
	WORK ITEM 7 - GBF POSITION 3	$20,874,000.00
	WORK ITEM 8 - GBF FINAL ASSEMBLY	$2,235,000.00
	WORK ITEM 9 - HARBOR STAGING	$1,965,000.00

FABRICATION TOTAL (100 FOUNDATIONS) $233,252,000.00
FABRICATION TOTAL (EA.) $2,332,520.00

OPINIONS OF PROBABLE COST INCLUDE THE FOLLOWING MARK-UPS:

GENERAL CONDITIONS:	**10%**
OVERHEAD:	**10%**
PROFIT:	**7.5%**
SALES TAX:	**0%**
INFLATION:	**0%**
CONTINGENCY:	**0%**

OPINION OF PROBABLE COSTS

OCC PROJECT NO: 211080.0
OCC PROJECT NAME: Shallow Water Offshore Wind System Optimization for the Great Lakes
Fabrication of Supplemental Pontoons and Winch Systems
CLIENT: U.S. DOE
SITE LOCATION: Port of Cleveland, OH - Approx: 41°30.2' N, 81°42.5'W
Operated by: Cleveland Cuyahoga County Port Authority

PREPARED BY: JOBA
DATE: 4/Oct/2013
CHECKED BY:

	WORK ITEM DESCRIPTION	OPC PRICE (LUMP SUM)
	FABRICATION OF BARGE AND WINCH SYSTEM	$36,922,000.00

BARGE FABRICATION TOTAL (2 BARGES) **$36,922,000.00**
BARGE FABRICATION TOTAL (EA.) $18,461,000.00

OPINIONS OF PROBABLE COST INCLUDE THE FOLLOWING MARK-UPS:

GENERAL CONDITIONS:	**10%**
OVERHEAD:	**10%**
PROFIT:	**7.5%**
SALES TAX:	**0%**
INFLATION:	**0%**
CONTINGENCY:	**0%**

OPINION OF PROBABLE COSTS

OCC PROJECT NO: 211080
OCC PROJECT NAME: Shallow Water Offshore Wind System Optimization for the Great Lakes
Integrated Assembly with Tower
Fabrication of Semi-Floating Gravity Based Foundation
CLIENT: U.S. DOE
SITE LOCATION: Port of Cleveland, OH - Approx: 41°30.2' N, 81°42.5'W
Operated by: Cleveland Cuyahoga County Port Authority

PREPARED BY: BRCO, JOBA, LETO
DATE: 4-Oct-13
CHECKED BY:

	WORK ITEM DESCRIPTION	OPC PRICE (LUMP SUM)
	MOBILIZATION AND DE-MOBILIZATION	$590,000.00
	WORK ITEM 1 - SITE EQUIPMENT	$5,203,000.00
	WORK ITEM 2 - WINTER STANDBY	$868,000.00
	WORK ITEM 3 - SKIDDING	$3,602,000.00
	WORK ITEM 4 - GBF PREFABRICATION	$115,122,000.00
	WORK ITEM 5 - GBF POSITION 1	$15,790,000.00
	WORK ITEM 6 - GBF POSITION 2	$32,025,000.00
	WORK ITEM 7 - GBF POSITION 3	$35,467,000.00
	WORK ITEM 8 - GBF POSITION 4	$21,548,000.00
	WORK ITEM 9 - GBF FINAL ASSEMBLY	$2,235,000.00
	WORK ITEM 10 - HARBOR STAGING	$2,056,000.00

FABRICATION TOTAL (100 FOUNDATIONS) $234,506,000.00
FABRICATION TOTAL (EA.) $2,345,060.00

OPINIONS OF PROBABLE COST INCLUDE THE FOLLOWING MARK-UPS:

GENERAL CONDITIONS:	**10%**
OVERHEAD:	**10%**
PROFIT:	**7.5%**
SALES TAX:	**0%**
INFLATION:	**0%**
CONTINGENCY:	**0%**

OPINION OF PROBABLE COSTS

OCC PROJECT NO: 211080
OCC PROJECT NAME: Shallow Water Offshore Wind System Optimization for the Great Lakes
Integrated Assembly with Tower
Fabrication of Gravity Based Foundation with Penetration Skirt
CLIENT: U.S. DOE
SITE LOCATION: Port of Cleveland, OH - Approx: 41°30.2' N, 81°42.5'W
Operated by: Cleveland Cuyahoga County Port Authority

PREPARED BY: BRCO, JOBA, LETO
DATE: 4-Oct-13
CHECKED BY:

	WORK ITEM DESCRIPTION	OPC PRICE (LUMP SUM)
	MOBILIZATION AND DE-MOBILIZATION	$590,000.00
	WORK ITEM 1 - SITE EQUIPMENT	$5,203,000.00
	WORK ITEM 2 - WINTER STANDBY	$868,000.00
	WORK ITEM 3 - SKIDDING	$3,002,000.00
	WORK ITEM 4 - GBF PREFABRICATION	$108,424,000.00
	WORK ITEM 5 - GBF POSITION 1	$55,626,000.00
	WORK ITEM 6 - GBF POSITION 2	$35,201,000.00
	WORK ITEM 7 - GBF POSITION 3	$20,874,000.00
	WORK ITEM 8 - GBF FINAL ASSEMBLY	$2,235,000.00
	WORK ITEM 9 - HARBOR STAGING	$2,056,000.00

FABRICATION TOTAL (100 FOUNDATIONS) $234,079,000.00
FABRICATION TOTAL (EA.) $2,340,790.00

OPINIONS OF PROBABLE COST INCLUDE THE FOLLOWING MARK-UPS:

GENERAL CONDITIONS:	**10%**
OVERHEAD:	**10%**
PROFIT:	**7.5%**
SALES TAX:	**0%**
INFLATION:	**0%**
CONTINGENCY:	**0%**

OPINION OF PROBABLE COSTS

OCC PROJECT NO: 211080.0
OCC PROJECT NAME: Shallow Water Offshore Wind System Optimization for the Great Lakes
Integrated Assembly with Tower
Fabrication of Barge/Pontoon and Winch Systems
CLIENT: U.S. DOE
SITE LOCATION: Port of Cleveland, OH - Approx: 41°30.2' N, 81°42.5'W
Operated by: Cleveland Cuyahoga County Port Authority

PREPARED BY: JOBA
DATE: 4-Oct-13
CHECKED BY:

	WORK ITEM DESCRIPTION	OPC PRICE (LUMP SUM)
	FABRICATION OF BARGE AND WINCH SYSTEM	$77,934,000.00

BARGE FABRICATION TOTAL (2 BARGES) **$77,934,000.00**
BARGE FABRICATION TOTAL (EA.) $38,967,000.00

OPINIONS OF PROBABLE COST INCLUDE THE FOLLOWING MARK-UPS:

GENERAL CONDITIONS:	**10%**
OVERHEAD:	**10%**
PROFIT:	**7.5%**
SALES TAX:	**0%**
INFLATION:	**0%**
CONTINGENCY:	**0%**

OPINION OF PROBABLE COSTS

OCC PROJECT NO: 211080
OCC PROJECT NAME: Shallow Water Offshore Wind System Optimization for the Great Lakes
Integrated Assembly with Tower
Potential Cost Savings in Offshore Construction Costs due to Tower Erection on Land *
CLIENT: U.S. DOE
SITE LOCATION: Port of Cleveland, OH - Approx: 41°30.2' N, 81°42.5'W
Operated by: Cleveland Cuyahoga County Port Authority

PREPARED BY: JOBA
DATE: 14-Nov-13
CHECKED BY:

ITEM		AVG DAY RATE [$K]
VESSELS		
	SELF-PROPELLED JACK-UP	212
	DP2 HEAVY LIFT CARGO VESSEL	45
	OFFSHORE BARGE	15
	SEAGOING TUG 100T	27.5
	ANCHOR HANDLING TUG 120T CLASS	35
	ROCK DUMPING VESSEL	80
	CREW VESSEL 12 PAX	9
	GROUT SPREAD VESSEL	35
EQUIPMENT		
	WORKCLASS ROV	11
	SURVEY EQUIPMENT	5
	CABLE LAY EQUIPMENT	11
	PILE DRIVING SPREAD	25
	GROUT SPREAD	12.5
	UHP WATER JET CUTTING EQUIPMENT (DECOM)	12
LABOR		
	OFFSHORE CREW (5 MEN)	7
	OFFSHORE CREW (10 MEN)	15

TOTAL COST PER SHIFT	**$557,000.00**
TOTAL PROJECT INSTALLATION TIME SAVINGS (314.8 DAYS TO 242.3 DAYS)	**72.5**
TOTAL PROJECT SAVINGS (100 FOUNDATIONS)	**$40,382,500.00**
TOTAL SAVINGS PER FOUNDATION (EA.)	$403,825.00

*** ABOVE COSTS PROVIDED BY CHRISTOPHER MONE' FROM NREL**

Appendix 4: Geotechnical Reports

Geotechnical Desktop Study

See attached Report.

Site-Specific Geotechnical Study

See attached Report.

URS Corporation
1375 Euclid Avenue, Suite 600
Cleveland, Ohio 44115
Phone: (216) 622-2400
Fax: (216) 622-2428
Architectural & Engineering Services

PRELIMINARY GEOTECHNICAL ENGINEERING MEMORANDUM

TO:	Chris Wissemann, FreshWater Wind I, LLC Stanley White, P.E. OCC/ COWI	**DATE:**	August 10, 2012
FROM:	Vik Gautam, P.E. Mak Jakate, P.E.	**PROJECT:**	Freshwater Wind Shallow Water Offshore Wind System Lake Erie Wind Farm
COPIES:	Keith Mast, URS Tracy Engle, URS File	**JOB NO.:**	13816136.00000
		RE:	*Preliminary Geotechnical Engineering Considerations*

ATTACHMENTS:
Figure 1 – Historic Site Plan
Figure 2 – Proposed Work Area – Option 1
Figure 3 – Subsurface Profile A-A'(N-S)
Figure 4 – Subsurface Profile B-B' (E-W)
Figure 5 – Subsurface Profile Wind Farm

The purpose of this memorandum is to present the results of URS Corporation's (URS') Preliminary Geotechnical existing data review and analysis for the proposed Shallow Water Offshore Wind System project and discuss briefly construction considerations to be aware of during the subsequent detailed study phase. This work was performed in accordance with our proposal dated June 28, 2012 addressed to Freshwater Wind I, LLC and OCC/COWI.

1.1 PROJECT UNDERSTANDING AND BACKGROUND

The project team for planning and performing a study of a holistic offshore wind system that can be optimized for shallow water conditions consists of Freshwater Wind I, LLC (Freshwater) and Ocean and Coastal Consultants (OCC), a COWI company. Freshwater Wind I, LLC is the owner and developer that will construct a new Shallow Water Offshore Wind Farm located in Lake Erie, approximately 7 miles north of the Port of Cleveland Dock 22 East in Cleveland, Ohio. OCC will work with Freshwater to provide commercial engineering services related to design, evaluation and execution of foundations as well as planning and co-ordination with wind turbine manufacturers.

The fabrication yard for the construction of the foundation elements for the wind towers will be located within the existing Dock 22E property and is currently envisioned to be 410 feet wide by 612 feet long. The wind towers will be supported on semi-floating Gravity Base Foundations (GBF), approximately 82 feet wide by 86.5 feet high. The GBF's would be constructed onshore in an assembly line process at the fabrication yard using an innovative "rail system" consisting of rails constructed on reinforced concrete grade beams supported on pile foundations (steel pipe or H-sections). Piles will be installed as two-element bents at regular spacing along the length of the grade beams. The top of the beams would be outfitted with a low-friction HDPE pad to enable the GBF's to be skidded along the concrete beams using walking jacks. The GBF's will be skidded to the end of the beam by the waterfront for loading onto a vertically moveable deck or "elevator", similar to that used in the shipbuilding industry at dry docks to launch ships. The GBF's would then be outfitted with auxiliary pontoons to provide buoyancy to tow them 7 miles into the Lake to the proposed off-shore wind farm location. After the GBF has been transported to the installation location, pontoon-mounted hydraulic winches will lower the GBF into the proper-lake bottom position resting on a penetration skirt designed to penetrate the upper soft soils using its self weight until proper bearing soils are encountered. The skirt thickness will be based on the bathymetry and geotechnical properties of lakebed soils. The plugged soil under the skirt will be treated insitu by injecting pressurized cement grout to increase the bearing and reduce potential settlement, thereby eliminating the need to dredge unsuitable soils and replacing with engineered fill. The wind towers would then be attached to the GBFs to complete the installation process.

In support of the project, Freshwater LLC/ OCC requested URS to perform a historical review of existing documents and provide generalized subsurface soil profiles for the fabrication yard as well as the off-shore wind farm location. In addition, URS was also requested to provide deep foundation recommendations in the form of pile types, and estimated capacities and lengths for the proposed fabrication yard.

1.2 REVIEW OF EXISTING HISTORICAL INFORMATION

As outlined in our proposal dated June 28, 2012, URS conducted a review of the existing historic information to develop the generalized soil profile for the fabrication yard and the wind farm location. The documents reviewed included:

1. Report: "Summary of Findings, Site Geotechnical Investigation- Dock No. 22E Improvements, Port of Cleveland, Ohio" dated July 1998 by Woodward-Clyde. The report provided geotechnical information in the form of twenty two borings drilled to depths of 23 to 38 feet below existing grade and three test pits ranging from 10 to 18 feet below grade.

The report also referenced the following historic reports:

a. Geotechnical Investigation for Dock 22E, dated March 1993 by Raamot Associates.

b. Report of Soil Conditions for Cleveland Port Authority Relocation Project dated May 1991 by David V. Lewin Corporation.

2. As- Built Construction Plans for Dock 22 East Phase III Slip Improvements dated February 1999 by URS Greiner.

3. Report Nos. 5-1 & 5-2: "Lake Bottom Geotechnical and Geophysical Studies – for First Phase Airport Feasibility Study" dated May 1974 by Dames and Moore, Inc.

The results of the historical data review and subsurface profiles generated are discussed in detail below.

1.2.1 RESULTS OF HISTORICAL REVIEW: Fabrication Yard – Historic Site Usage

The current property is bounded by an anchored dockwall constructed in February 1999 along the eastern, southern faces and an approximately 100-foot long portion along the northern face. The remainder of the northern face is protected by a riprap slope that is 6 feet thick and sloped at 2H: 1V from a top EL 587 to a lake bottom EL 553. The main dockwall consists of 73 feet long AZ 48 sheet pile sections. Anchor rods (1.25 inch diameter Dywidag bars) are spaced at approximately 3 feet 10 inch on centers and located approximately 10 feet below existing grade. The deadman wall consists of approximately 14 feet long AZ 18 sheet pile sections buried 1 foot below existing grade. C15 walers are present on the back face of the deadman wall.

A review of the historic site usage as determined from Sanborn Insurance Maps (1912-1972) as well as Hopkins Plat Maps (1920-1927) indicated that the early site usage from 1853 to 1953 was primarily transportation-related with involvement of both railroads and ships. Various structures present on the site include: A 90-foot tall iron chimney, power plant and trestle with associated deep foundations along the east edge; a cluster of buildings such as mule house, engine room, iron car dump, incline, supply house; numerous railroad spurs and rail grillages, and; an old round house. While a majority of the structures were demolished to grade by 1953, the deep foundations for these structures still exist to this date. Also, the original north shoreline was approximately 230 feet south of the current shoreline, and rock and random fill was placed in the northern 230 feet of the current site to reclaim land for past usage of the site.

In 1953-54, the site functioned as the Railway Parcel Post Terminal. The north portion of the Terminal was occupied by a truck service garage while the southern portion included a Terminal Building and a loading dock. The Parcel Post Terminal was demolished in 1985 but the deep foundations for the structures including timber piles are still present on-site. An underground storage tank (UST) along the northwest corner of the Parcel Post terminal building may still exist on-site.

The historic site usage and previous extent of the site is shown on Figure 1 – Historic Site Plan.

The proposed work area for the fabrication yard as overlaid on the historic site usage indicates that deep foundations for many structures as well as the round house and railroad spurs will likely be encountered during construction work at the site. The northern half of the fabrication yard will likely encounter deeper layers of random rock and construction debris and other random variable fill. Figure 2 – Proposed Work Area – Option 1, attached provides a graphical view of the likely obstructions as well as locations of the soil borings performed for installation of the new anchored seawall.

1.3 SUSBURFACE SOIL PROFILES

1.3.1 Fabrication Yard: Subsurface Soil Profile

Generalized subsurface profiles were created using the historical soil borings presented in the reference documents. In general, the subsurface profile was consistent along a north-south line (Section A-A') as well as an east-west line (Section B-B'). It should be noted that all the borings were located in the eastern portion of the site in the vicinity of the dockwalls and no boring information was available for the rest of the site. The generalized profiles are based on extrapolations across the site and should be considered preliminary. Additional geotechnical investigations need to be performed and the preliminary profiles presented herein should be updated prior to detailed design. Ground surface has been assumed at EL 583 across the site.

Random granular as well as cohesive fill was encountered below the surficial asphalt/ concrete paving material to a depth of 23 feet below grade (EL 560). Due to the random nature of the fill, a nominal value of cohesion of 500 psf was assigned to the fill. The random fill included abandoned concrete foundations, timber piles, and debris such as cinders, brick, concrete, stone, coal, wood, metal, glass, oil and abandoned railroad ties.

The fill material was underlain by an approximately 8-foot thick layer of loose to medium-dense silty sand to EL 552. The average blow count per foot (bpf) for this layer was 12. The layer was assigned an angle of internal friction of 27 degrees.

Below the silty sand layer, the profile consisted of lacustrine clays with variable consistency. From EL 552 to EL 517 (35 feet thick) the lacustrine clay consisted of medium stiff gray silty clay with average cohesion of 900 psf and average total unit weight of 130 pcf. The lacustrine deposit became stiff to very stiff between EL 517 and EL 484 (33 ft. thick), with average cohesion of 3300 psf and average total unit weight of 139 pcf.

The lacustrine clay was underlain by glacial till consisting of hard gray silty clay with sand, cobbles, rock fragments and gravel. Between EL 484 and EL 464 (20 feet thick), the till had an average cohesion of 5150 psf and average total unit weight of 140 pcf. Between EL 464 and EL 447, the stiffness increased somewhat and the till had an average cohesion of 5850 psf and average total unit weight of 140 pcf.

The till was underlain by shale bedrock. Rock coring or strength parameters for the shale were not available in the historical data reviewed herein. Based on URS experience on other projects in the vicinity, the shale bedrock is generally soft and has typical compressive strength values of approximately 2000 psi.

Figures 3 and 4, attached present the generalized subsurface profile along both cross-sections for the fabrication yard area.

1.3.2 Off-shore Wind Farm: Subsurface Soil Profile

The Dames and Moore report was reviewed for obtaining geotechnical information related to the offshore wind farm location anticipated to be located a generic distance of 7 miles from the shoreline near the Port of Cleveland dock. Detailed geotechnical data in the form of test borings with SPT results or data tested was not available in the vicinity of the wind farm location. Instead, two vibracore results (contained soil descriptions and time required to push the core that were correlated to consistency of cohesive soils) and the bathymetry/ isopach information in the vicinity were utilized to develop a generalized subsurface profile for the offshore wind farm location. It should be noted that the profile only provides generic descriptions of the layers without any engineering properties assigned to the layers.

The water surface elevation in the Lake was assumed to be EL 573. The lake bottom was encountered at EL 513, corresponding to an average depth of 60 feet. The upper 20 feet of soils to EL 493 consisted of either gray silt or soft silty clay. This layer was underlain by a 10-foot thick clayey silt/ medium silty clay layer to EL 483. A stiff to very stiff, gray silty clay layer was encountered below the sand and extended to shale bedrock, which was encountered at EL 408 (depth of 165 feet).

Figure 5 shows the generalized soil profile for the offshore wind farm location as discussed above.

1.4 PRELIMINARY FOUNDATION RECOMMENDATIONS – FABRICATION YARD

The following section presents the results of preliminary pile capacity analyses performed for the proposed foundations at the fabrication yard. Based on information provided by OCC, the desired working loads for individual piles are 75 tons, 150 tons and 175 tons. Analyses were performed using the Federal Highway Administration's DRIVEN software to estimate pile lengths required to develop the working loads for individual piles specified by OCC. The analyses were performed using the generalized subsurface profile developed earlier. Considering the random fill and possibility of encountering existing deep foundations across the site, the deep foundations analyzed consisted of H-piles and pipe piles. The results of the analyses are presented in a tabulated format below.

LENGTH OF PILE REQUIRED

Pile Section	Working Load 75 tons	Working Load 150 tons	Working Load 175 tons
HP 12 X 53	100 feet	136 feet *	136 feet *
HP 14 X 73	90 feet	134 feet	136 feet *
12-inch pipe pile	115 feet	136 feet *	136 feet *
16-inch pipe pile	90 feet	136 feet *	136 feet *
18-inch pipe pile	80 feet	134 feet	136 feet *

Note: * = Foundation performs as end bearing with minimum 2 feet embedded into bedrock.

The above estimated pile lengths are subject to the following assumptions:

- It is assumed that concrete grade beams will be 3-foot deep with the top of beam elevation matching the existing surface elevation, which is assumed at EL 583. It was further assumed that the pile foundation will be embedded a minimum of 1 foot into the beam.
- Beam width will be sufficient to allow a minimum spacing of 3 times the pile diameter center to center between adjacent piles. If closer spacing is necessary, the required pile length may need to increase due to group effects.
- The analyses were based on achieving a factor of safety of 2.0 on the ultimate pile capacity with respect to the desired working load.

Additional foundation design considerations/conclusions include:

- Based on the results, it appears that piles designed for working loads of 150 and 175 tons will need to extend either to just above the top of rock (150 ton piles) or into rock (175 ton piles). At these loads, piles will act as combination friction and end-bearing piles.
- Piles designed for the lower working load of 75 tons will need to penetrate into the stiff to very stiff lacustrine deposit, terminating just above the till layer. These piles will achieve the majority of their capacity through skin friction.
- It should be noted that the pile lengths given above are based on axial geotechnical capacity only. The design of the specific pile section(s) selected for the project will need to account for combined bending and axial load effects, any unbraced length considerations, and drivability considerations. Based on the presence of fill with random rocks/ construction debris, length of pile required, and need to penetrate into shale bedrock for piles with higher working load, we anticipate that H-piles will have better drivability characteristics than pipe piles.
- The width of the concrete beams should be designed to preclude punching shear failure of the piles. Furthermore, a minimum clear distance of 6 inches between the beam and edge and the edge of piles should be provided, regardless of punching shear analysis.
- The center-to-center spacing of adjacent piles should be at least 3 times the pile diameter, to avoid pile capacity reduction due to group effects.

In addition to the foundation recommendations, we have developed some general constructability considerations that are presented in the next section.

1.5 CONSTRUCTIBILITY CONSIDERATIONS

The following preliminary constructability considerations are provided based on our study. It is noted that further analysis and evaluation will be required during the next design phase of the project:

- The geotechnical information available at the fabrication yard is limited to the vicinity of the more recently constructed anchored dockwall constructed for Dock 22E along the eastern edge of the site. Available geotechnical information at the offshore wind farm site is very limited. Additional geotechnical investigation consisting of test borings should be drilled within other areas of the fabrication yard, the proposed offshore location north of the existing

riprap face in the vicinity of the proposed "elevator" trestle as well as at the proposed location of the offshore wind farm.

- Based on previous site usage, construction activities such as excavation and foundation installation will encounter remnants of previous usage structures such as railroad spurs, abandoned railroad ties, abandoned underground storage tank, railroad round house, terminal building etc. with their associated deep foundations (timber piles, concrete foundations). Additional site investigations including test pits, geophysical techniques such as GPR or other methods should be used to determine the extent of obstructions prior to commencement of construction activities to better locate the obstructions. Contractors should also be made aware of the potential for encountering deeper deposits of random fill, especially along the northern 230-foot portion of the fabrication yard site.
- The proposed construction will likely encounter existing utilities that may have to be temporarily rerouted to maintain service. These utilities include, but are not limited to, a 15-inch storm sewer located 10 feet east of the deadman wall, Manhole MH S-2 for the storm sewer, a 12-inch potable water main located 15 feet west of the deadman wall with associated laterals supplying water to the fire hydrants and dispensers located along the edge of the main dockwall, a 4-inch water main located 25 feet west of the deadman wall and a 2-inch PVC Sch 40 conduit with copper circuit wires and light poles located 50 feet west of the deadman wall.
- The currently proposed location of the eastern concrete beam acting as rails is in the vicinity of the existing deadman wall. The deadman anchors the main dockwall with tierod bars spaced at approximately 3 feet 10 inch spacing and located about 10 ft below existing grade. Localized 10-foot deep excavations may be needed at certain locations to expose tierods and adjust spacing of deep foundation elements supporting the concrete beam. If possible, the easternmost concrete beam should be relocated to the west to maintain a 10-foot clearance from the deadman wall to avoid reduced capacity due to shadowing effect of the existing deadman sheeting. This will also eliminate the potential for encountering tierods or existing walers on the back face of the deadman seawall.
- During the design phase, the design of the existing anchored dockwall system should be re-checked to ensure that no additional loading including lateral, if any, is transferred to the dockwall system due to site construction and usage of the fabrication yard.
- The trestle-type foundation required for the "elevator" will have to be designed to be braced laterally to provide adequate support during the GBF loading and unloading process. The location of the "elevator" along the north face of the site should be verified to ensure that it is clear of the limits for the shipping channel.

- Additional design work including appropriate quality control methods will have to be decided to ensure that the proposed pressure grouting of the soft soils underneath the GBF base at the offshore wind farm location has been completed adequately and the increase in bearing capacity achieved is adequate to limit potential settlement of the GBF in the future. Details of this process have not been developed to an extent for us to provide specific recommendations at this time.

1.6 LIMITATIONS

This memorandum represents a preliminary historical geotechnical information review and analysis of the project. Observations and recommendations provided herein are subject to change based on further detailed exploration proposed to be conducted under the design phase of the project.

The conclusions and recommendations presented in this memorandum are based on current discussions with the design team and our understanding of the existing site conditions. It is recommended that communication be maintained with URS in order to ensure that the recommendations made herein are properly updated and incorporated into the design phase. URS should be made aware of any variations and, if necessary, will issue changes to the recommendations made, when more detailed information is made available.

The conclusions and recommendations presented in this memorandum are based on our analysis of the data collected for this project. The recommendations presented in this memorandum should not be used for other projects or purposes. Conclusions or recommendations made from these data by others are their responsibility. Our services were provided in a manner consistent with the level of care and skill ordinarily exercised by other professional consultants under similar circumstances. No other representation is intended.

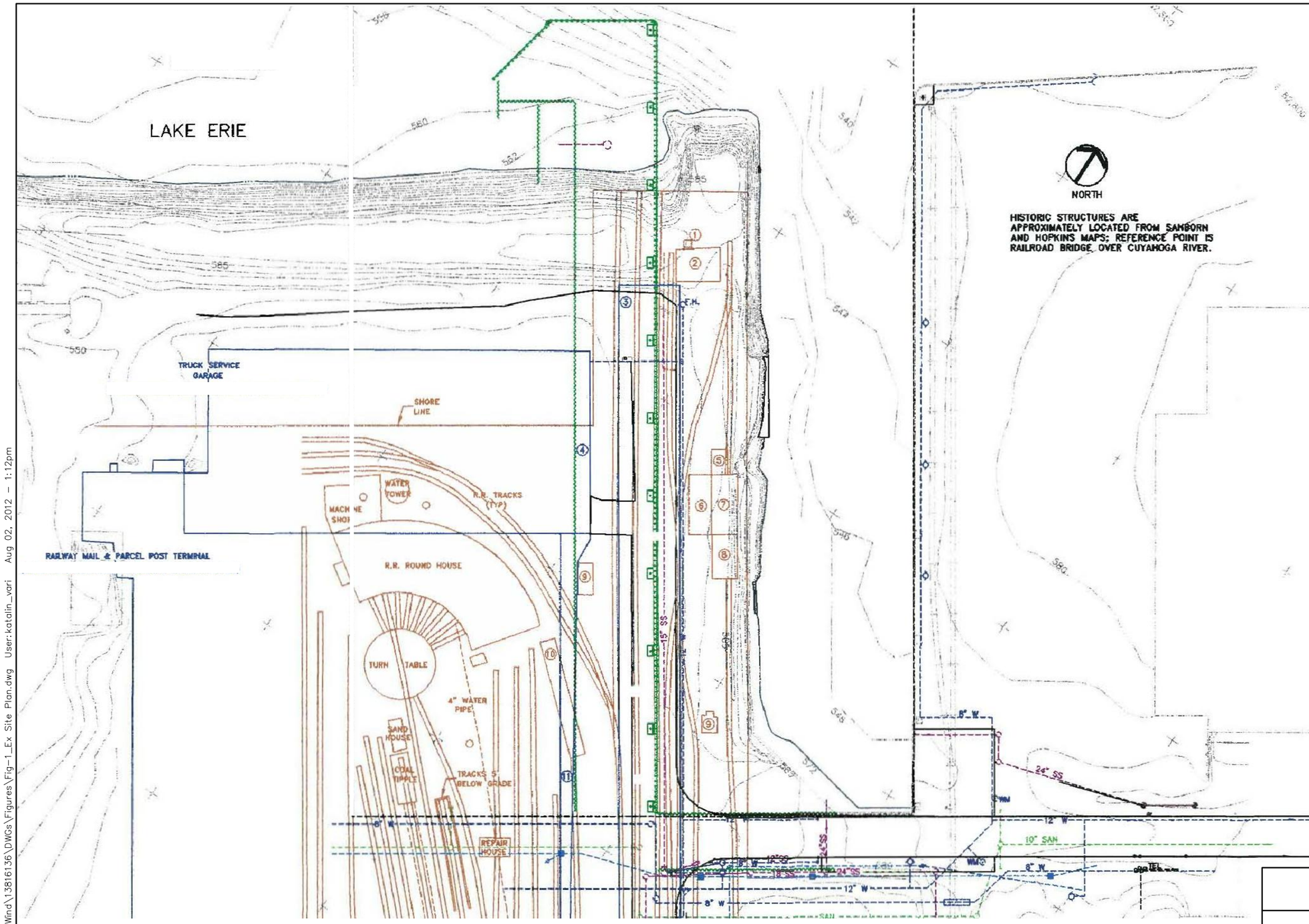

NOTES

1. 90' IRON CHIMNEY;
2. POWER PLANT "1-2 (IRON)"; TRESTLE;
3. WEST 9th STREET EXTENSION
4. PARCEL POST GARAGE; DEEP FOUNDATIONS, SEE DRAWINGS C221, C222, AND C223
5. MULE HOUSE;
6. ENGINE ROOM;
7. IRON CAR DUMP; DEEP FOUNDATIONS, SEE DRAWING C224
8. INCLINE;
9. OFFICE;
10. SUPPLY HOUSE;
11. PARCEL POST LOADING DOCK; DEEP FOUNDATIONS, SEE DRAWINGS C221, C222, AND C223

LEGEND

- STRUCTURES ASSOCIATED WITH TRANSPORTATION (i.e. RAILROADS & SHIPPING) C. 1853 TO 1953
- STRUCTURES ASSOCIATED WITH THE PARCEL POST ANNEX C. 1954 TO 1985
- PROPOSED SHEET PILE BULKHEAD AND DEADMAN WALLS WITH ASSOCIATED STRUCTURES
- EXISTING UNDERGROUND STORM SEWER LINES
- EXISTING UNDERGROUND POTABLE WATER LINES
- EXISTING UNDERGROUND SANITARY SEWER LINES
- EXISTING UNDERGROUND ELECTRIC LINES

0 50 100

APPROX. SCALE: 1"=100'

NOTE:
HISTORIC SITE LAYOUT BASED ON URS GREINER DRAWING DATED 7/20/98.

URS

FRESHWATER WIND

CLEVELAND, OHIO

HISTORIC SITE PLAN

DRAWN BY:	CHECKED BY:	PROJECT No:	DATE:	FIGURE No:
KV	MJ	13816136	7/25/12	1

K:\Projects\F\Freshwater Wind\13816136\DWGs\Figures\Fig-1_Ex Site Plan.dwg User:katalin_vari Aug 02, 2012 - 1:12pm

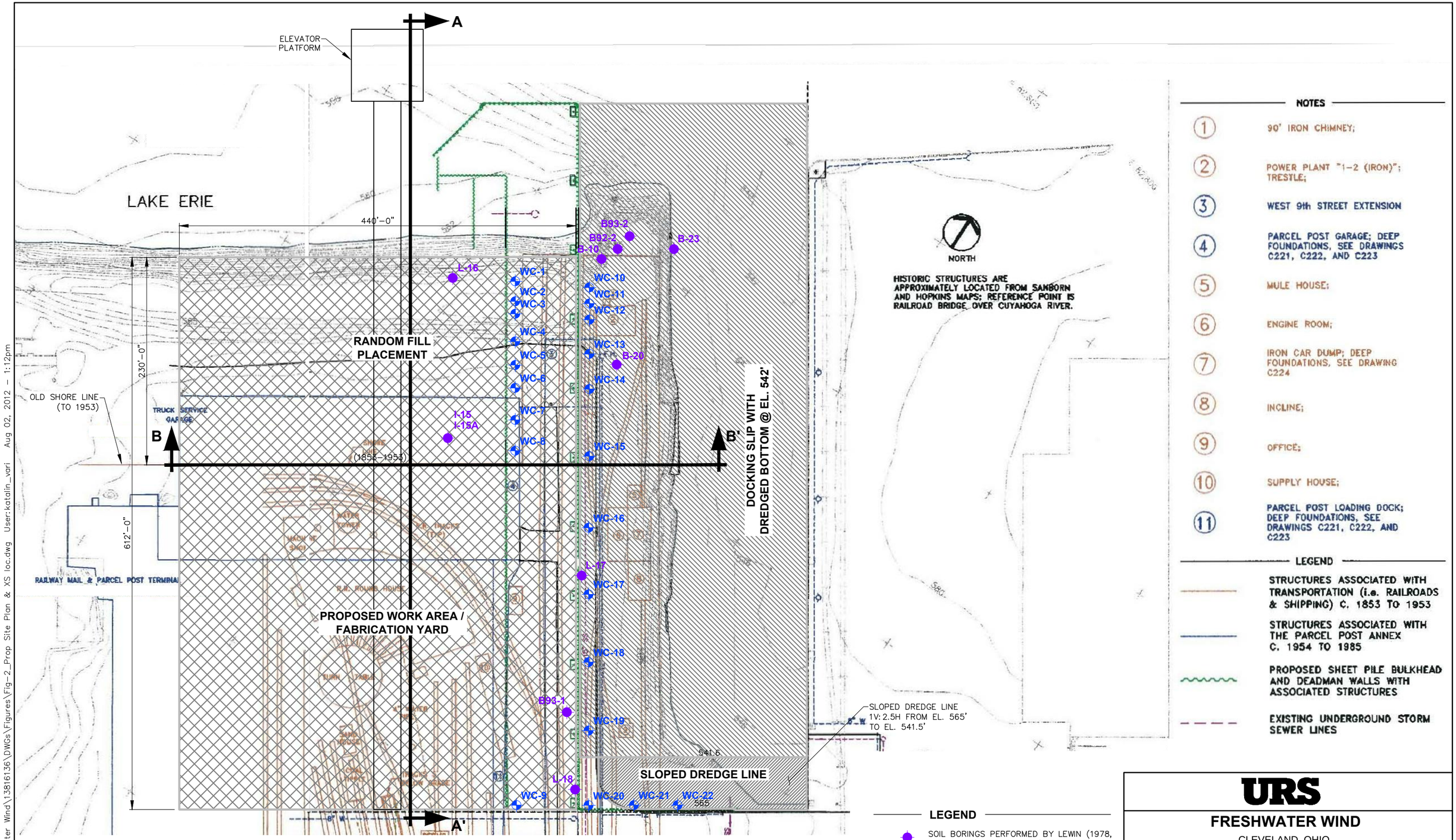
A
ELEVATOR PLATFORM
LAKE ERIE
440'-0"
230'-0"
612'-0"
OLD SHORE LINE (TO 1953)
TRUCK SERVICE GARAGE
SHORE LINE (1853-1953)
RAILWAY MAIL & PARCEL POST TERMINAL
RANDOM FILL PLACEMENT
PROPOSED WORK AREA / FABRICATION YARD
B
B'
A'
DOCKING SLIP WITH DREDGED BOTTOM @ EL. 542'
SLOPED DREDGE LINE
SLOPED DREDGE LINE 1V:2.5H FROM EL. 565' TO EL. 541.5'
541.6
565
B93-2
B92-2
B-10
B-23
L-16
WC-1
WC-2
WC-3
WC-4
WC-5
WC-6
WC-7
WC-8
WC-9
WC-10
WC-11
WC-12
WC-13
WC-14
WC-15
WC-16
WC-17
WC-18
WC-19
WC-20
WC-21
WC-22
B-20
I-15
I-15A
L-17
B93-1
L-18
NORTH
HISTORIC STRUCTURES ARE APPROXIMATELY LOCATED FROM SANBORN AND HOPKINS MAPS; REFERENCE POINT IS RAILROAD BRIDGE OVER CUYAHOGA RIVER.
NOTES
1 90' IRON CHIMNEY;
2 POWER PLANT "1-2 (IRON)"; TRESTLE;
3 WEST 9th STREET EXTENSION
4 PARCEL POST GARAGE; DEEP FOUNDATIONS, SEE DRAWINGS C221, C222, AND C223
5 MULE HOUSE;
6 ENGINE ROOM;
7 IRON CAR DUMP; DEEP FOUNDATIONS, SEE DRAWING C224
8 INCLINE;
9 OFFICE;
10 SUPPLY HOUSE;
11 PARCEL POST LOADING DOCK; DEEP FOUNDATIONS, SEE DRAWINGS C221, C222, AND C223
LEGEND
STRUCTURES ASSOCIATED WITH TRANSPORTATION (i.e. RAILROADS & SHIPPING) C. 1853 TO 1953
STRUCTURES ASSOCIATED WITH THE PARCEL POST ANNEX C. 1954 TO 1985
PROPOSED SHEET PILE BULKHEAD AND DEADMAN WALLS WITH ASSOCIATED STRUCTURES
EXISTING UNDERGROUND STORM SEWER LINES
LEGEND
SOIL BORINGS PERFORMED BY LEWIN (1978, 1989, 1990) AND RAMOT (1992, 1993)
SOIL BORINGS PERFORMED WOODWARD-CLYDE (1998)
B B'
CROSS-SECTION LOCATION
0 50 100
APPROX. SCALE: 1"=100'
NOTE:
HISTORIC SITE LAYOUT BASED ON URS GREINER DRAWING DATED 7/20/98.
URS
FRESHWATER WIND
CLEVELAND, OHIO
PROPOSED WORK AREA - OPTION I
BORING & CROSS-SECTION LOCATIONS
DRAWN BY: KV
CHECKED BY: MJ
PROJECT No: 13816136
DATE: 7/25/12
FIGURE No: 2
K:\Projects\F\Freshwater Wind\13816136\DWGs\Figures\Fig-2_Prop Site Plan & XS loc.dwg User:katlin_vari Aug 02, 2012 - 1:12pm

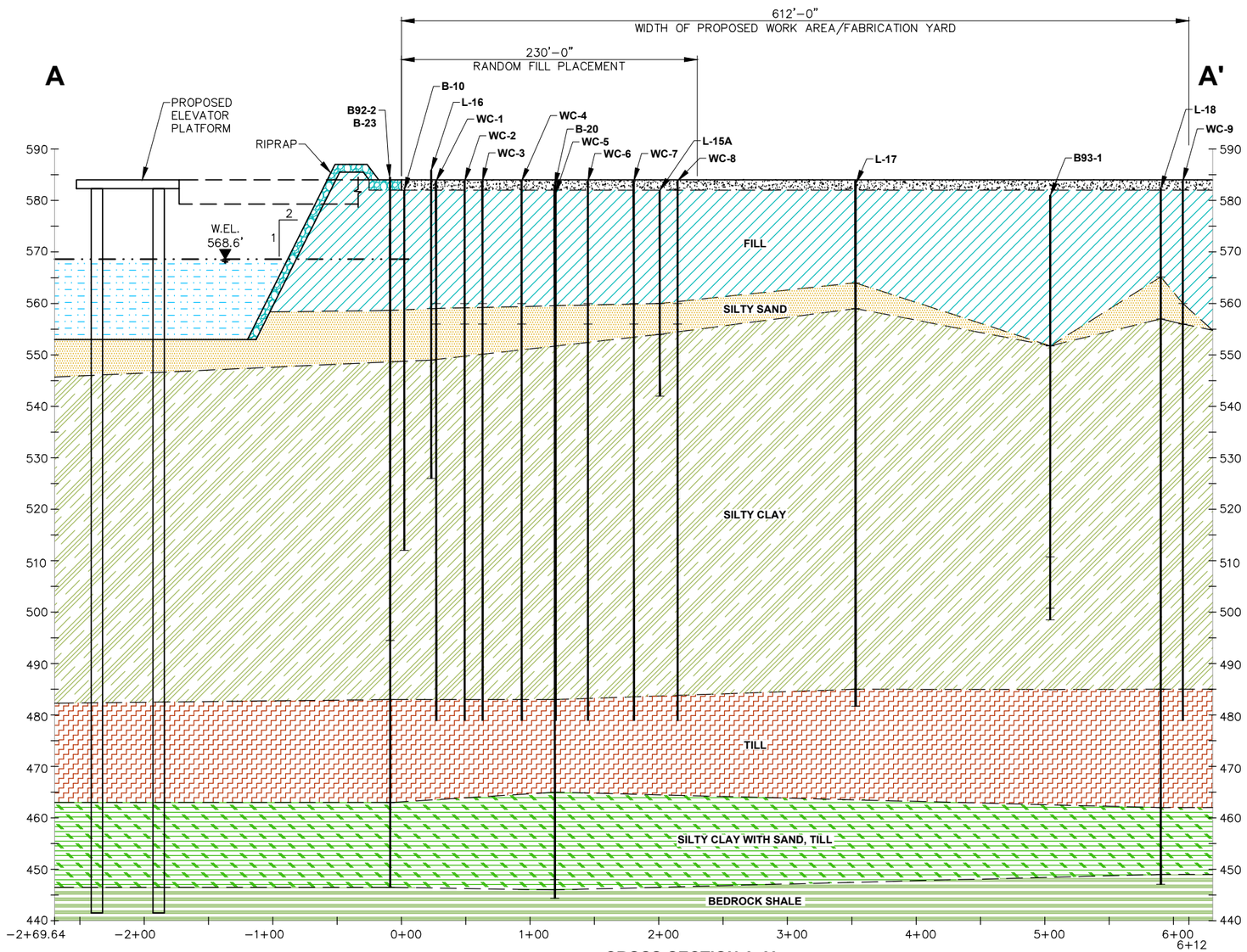

CROSS-SECTION A-A'

0 50 100

HORIZONTAL SCALE: 1"=100'

0 12.5 25

VERTICAL SCALE: 1"=25'

GENERALIZED SOIL PROFILE

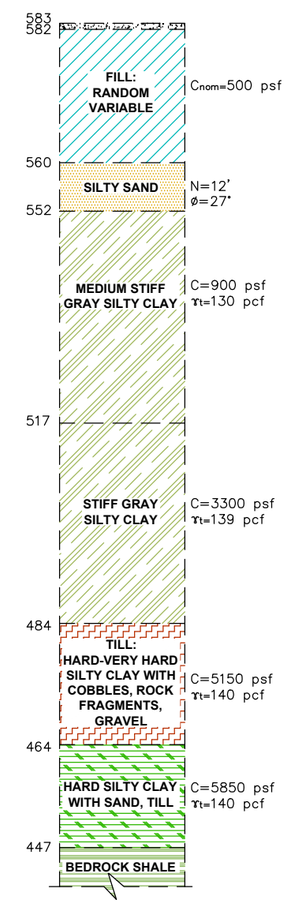

LEGEND

- WATER
- CONCRETE/ASPHALT
- FILL
- SILTY SAND
- SILTY CLAY
- TILL
- HARD SILTY CLAY WITH SAND/TILL
- SHALE

NOTES:

1. SUBSURFACE PROFILE BASED ON INFORMATION PROVIDED IN:

   A. SUMMARY OF FINDINGS, SITE GEOTECHNICAL INVESTIGATION–DOCK NO. 22E IMPROVEMENTS, PORT OF CLEVELAND, OHIO, DATED JULY 1998 BY WOODWARD–CLYDE.

   B. GEOTECHNICAL INVESTIGATION FOR DOCK 22E, DATED MARCH 1993 BY RAAMOT ASSOCIATES.

   C. REPORT OF SOIL CONDITIONS FOR CLEVELAND PORT AUTHORITY RELOCATION PROJECT DATED MAY 1991 BY DAVID V. LEWIN CORPORATION.

   D. AS– BUILT CONSTRUCTION PLANS FOR DOCK 22 EAST PHASE III SLIP IMPROVEMENTS DATED FEBRUARY 1999 BY URS GREINER.

URS

FRESHWATER WIND

CLEVELAND, OHIO

SUBSURFACE PROFILE A-A' (N-S)

DRAWN BY:	CHECKED BY:	PROJECT No:	DATE:	FIGURE No:
KV	MJ	13816136	7/25/12	3

K:\Projects\F\Freshwater Wind\13816136\DWGs\Figures\Fig-3_ XS A-A'.dwg User:katalin_vori Aug 02, 2012 - 1:12pm

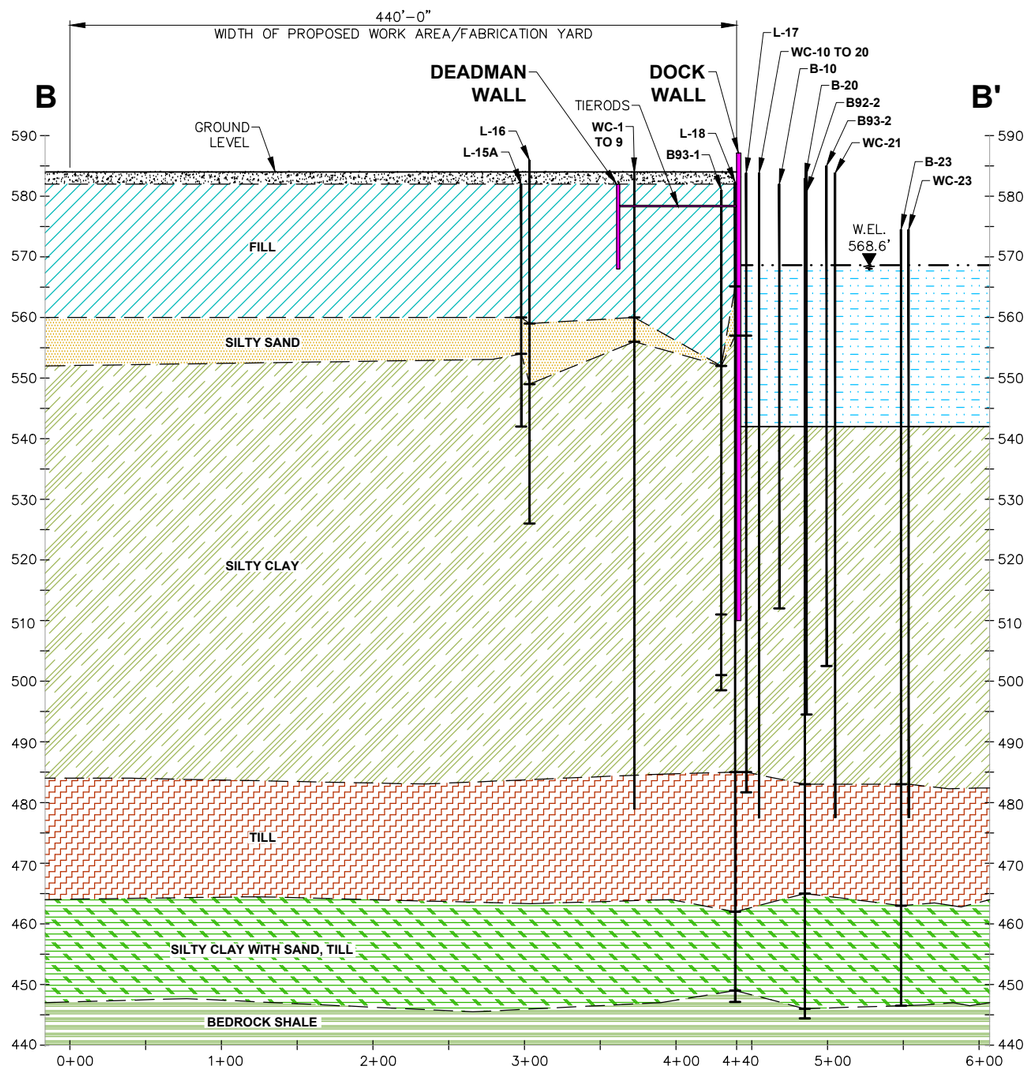

CROSS-SECTION B-B'

0 50 100

HORIZONTAL SCALE: 1"=100'

0 12.5 25

VERTICAL SCALE: 1"=25'

GENERALIZED SOIL PROFILE

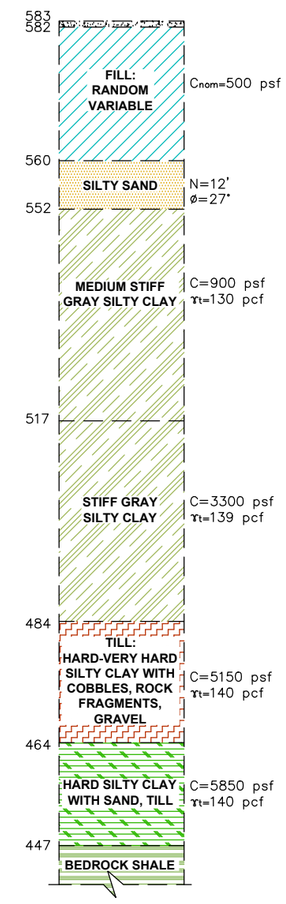

LEGEND

- WATER
- CONCRETE/ASPHALT
- FILL
- SILTY SAND
- SILTY CLAY
- TILL
- HARD SILTY CLAY WITH SAND/TILL
- SHALE

NOTES:

1. SUBSURFACE PROFILE BASED ON INFORMATION PROVIDED IN:

   A. SUMMARY OF FINDINGS, SITE GEOTECHNICAL INVESTIGATION–DOCK NO. 22E IMPROVEMENTS, PORT OF CLEVELAND, OHIO, DATED JULY 1998 BY WOODWARD–CLYDE.

   B. GEOTECHNICAL INVESTIGATION FOR DOCK 22E, DATED MARCH 1993 BY RAAMOT ASSOCIATES.

   C. REPORT OF SOIL CONDITIONS FOR CLEVELAND PORT AUTHORITY RELOCATION PROJECT DATED MAY 1991 BY DAVID V. LEWIN CORPORATION.

   D. AS– BUILT CONSTRUCTION PLANS FOR DOCK 22 EAST PHASE III SLIP IMPROVEMENTS DATED FEBRUARY 1999 BY URS GREINER.

URS

FRESHWATER WIND

CLEVELAND, OHIO

SUBSURFACE PROFILE B-B' (E-W)

DRAWN BY:	CHECKED BY:	PROJECT No:	DATE:	FIGURE No:
KV	MJ	13816136	7/25/12	4

K:\Projects\F\Freshwater Wind\13816136\DWGs\Figures\Fig-4_ XS B-B'.dwg User:katalin_vari Aug 02, 2012 – 1:12pm

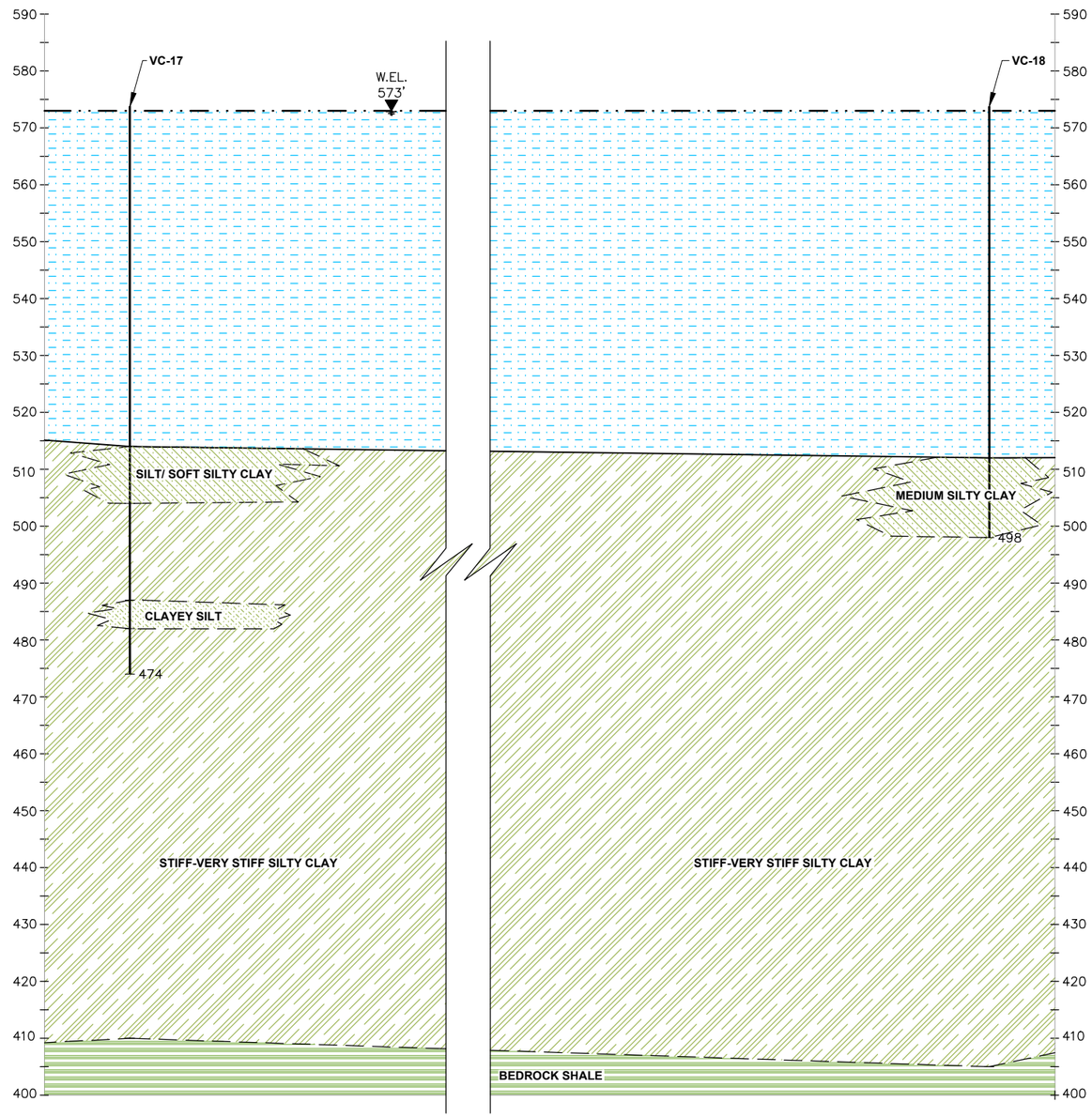

GENERALIZED SOIL PROFILE

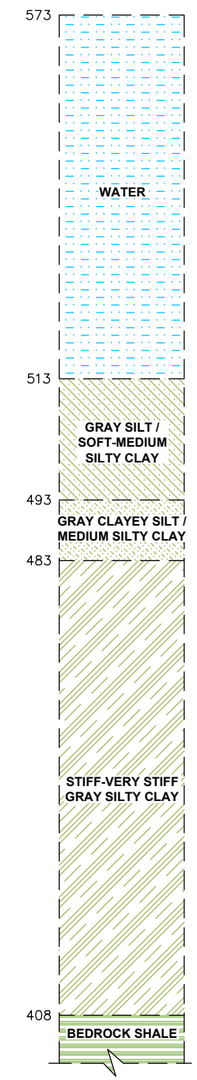

LEGEND

- WATER
- SILT
- CLAYEY SILT
- SILTY CLAY
- SHALE

NOTES:

1. SUBSURFACE PROFILE BASED ON INFORMATION PROVIDED IN:
   - REPORT NOS. 5–1 & 5–2: "LAKE BOTTOM GEOTECHNICAL AND GEOPHYSICAL STUDIES – FOR FIRST PHASE AIRPORT FEASIBILITY STUDY" DATED MAY 1974 BY DAMES AND MOORE, INC.

2. SOIL DATA BELOW TIP ELEVATION OF VIBRACORES INTERPOLATED FROM:

   A. "EXHIBIT 9 – ELEVATIONS ON TOP OF SHALE"

   B. "EXHIBIT 10 – REPRESENTATIVE SOIL PROFILE (SOUTH TO NORTH)" PROVIDED IN ABOVE REFERENCED DOCUMENT.

0 12.5 25

VERTICAL SCALE: 1"=25'
VERTICAL EXAGGERATION 4x

URS

FRESHWATER WIND

CLEVELAND, OHIO

SUBSURFACE PROFILE AT WIND FARM

DRAWN BY:	CHECKED BY:	PROJECT No:	DATE:	FIGURE No:
KV	MJ	13816136	7/25/12	5

K:\Projects\F\Freshwater Wind\13816136\DWGs\Figures\Fig-5_ XS LAKE'.dwg User:katalin_vari Aug 02, 2012 – 1:12pm

GEOTECHNICAL DATA REPORT

PROPOSED OFFSHORE WIND FARM-PROJECT ICEBREAKER
CLEVELAND, OHIO

Prepared For:

LAKE ERIE ENERGY DEVELOPMENT CORPORATION
1938 EUCLID AVENUE, SUITE 200
CLEVELAND, OHIO 44115

Prepared by:
Conestoga-Rovers & Associates

1805 East Perkins Avenue
Sandusky, Ohio 44870

Office: (419) 609-1339
Fax: (419) 609-1338

web:
http:\\www.CRAworld.com

JUNE 2013
REF. NO. 082317 (2)

GEOTECHNICAL DATA REPORT

PROPOSED OFFSHORE WIND FARM-PROJECT ICEBREAKER
CLEVELAND, OHIO

Prepared For:

LAKE ERIE ENERGY DEVELOPMENT CORPORATION
1938 EUCLID AVENUE, SUITE 200
CLEVELAND, OHIO 44115

STATE OF OHIO
Michael C. Gentner
#E-69089
REGISTERED
PROFESSIONAL ENGINEER
EXPIRES 12/31/13

Michael C. Gentner, P.E.
Project Manager

Prepared by:
Conestoga-Rovers & Associates

1805 East Perkins Avenue
Sandusky, Ohio 44870

Office: (419) 609-1339
Fax: (419) 609-1338

web:
http:\\www.CRAworld.com

JUNE 2013
REF. NO. 082317 (01)

TABLE OF CONTENTS

Page

1.0 INTRODUCTION 1

2.0 FIELD AND LABORATORY WORK PROGRAMS 2

3.0 SITE AND SUBSURFACE CONDITIONS.....5
3.1 BOREHOLE RESULTS.....5
3.2 CPT SOUNDING RESULTS 6
3.3 GEOPHYSICAL RESULTS.....6

4.0 LIMITATIONS OF THE REPORT 7

LIST OF FIGURES
(Following Text)

FIGURE 1 SITE LOCATION MAP

FIGURE 2 GEOTECHNICAL BORING LOCATIONS

LIST OF APPENDICES

APPENDIX A BOREHOLE LOG AND SOIL CLASSIFICATION NOTES

APPENDIX B CONE PENETRATION TEST LOGS

APPENDIX C IN-SITU DENSITY RESULTS

APPENDIX D P-S WAVE LOGGING RESULTS

APPENDIX E LABORATORY TEST RESULTS

APPENDIX F PHOTOGRAPHIC LOG

1.0 INTRODUCTION

Conestoga-Rovers & Associates, Inc. (CRA) was retained by Lake Erie Energy Development Corporation (LEEDCo) to conduct a preliminary subsurface exploration to assess the soil and bedrock conditions for a planned offshore wind farm project in Cleveland, Ohio. A Site Location Plan is provided as Figure 1. The data collected will be used by others for preliminary geotechnical evaluation and to assess foundation design options for the planned wind turbines. This data report contains a description and findings of our subsurface exploration and results from our laboratory testing.

2.0 FIELD AND LABORATORY WORK PROGRAMS

The fieldwork for this geotechnical evaluation was carried out between May 5 and 10, 2013. One (1) borehole (BH-1) and three (3) cone penetration test (CPT) soundings were advanced in close proximity of the proposed turbine locations. The borehole was extended to 120 feet below the lake bed (i.e. the mudline) and the CPT soundings were advanced until refusal was encountered.

The approximate borehole and CPT locations are shown on the attached Location Plan enclosed as Figure 2. The detailed results of the borehole and CPT soundings are included on the accompanying boring logs in Appendix A.

The borehole and CPT locations were determined by LEEDCo and provided to CRA. Frontz Drilling, under the full-time supervision of CRA engineers, completed the borehole drilling work and assisted in the CPT soundings. ConeTec, Inc. provided the CPT equipment and data acquisition services. Colog Group completed the downhole geophysical survey for density and P-S wave measurement.

All work was completed from a jack-up platform barge. Andrie Specialized provided the barge and tug boat services. The boring and CPT sounding locations were determined using their onboard GPS navigation system. After the barge was set up at each test location, the depth from barge deck to lake level and depth of water were measured. The following table shows the test location coordinates, elevations, and other measurements taken. The lake level elevation was obtained from the United States Army Corps of Engineers (USACOE) data base at the Cleveland measurement station.

Location	Description	Latitude NAD 83 DMS (planned)	Longitude NAD 83 DMS (planned)	Latitude NAD 83 DMS (actual)	Longitude NAD 83 DMS (actual)	Barge Deck to Water (feet)	Water Level Elevation (feet)	Depth of Water (feet)	Lake Bed (mudline) Elevation (feet)
CPT-1	Turbine 1	41°35′31.671″ N	81°47′31.106″ W	41°35′31.7″ N	81°47′31.1″ W	15.7	571.21	60	511.21
CPT-2	Turbine 3	41°36′21.340 N	81°48′21.078″ W	41°36′21.3″ N	81°48′21.0″ W	14	571.21	59.83	511.38
CPT-3	Turbine 6	41°37′35.833″ N	81°49′36.077″ W						
CPT-3A	Offset from CPT-3			41°37′10.4″ N	81°49′11.9″ W	10.08	571.19	60.42	510.77
CPT-4	Turbine 8	41°38′25.487″ N	81°50′26.102″ W	Not Drilled					
BH-1	Turbine 4	41°36′46.173″ N	81°48′46.073″ W	41°36′46.1″ N	81°48′46″ W	11.67	571.18	60.25	510.93

The elevations of the lake level are referenced to IGLD 1985 datum.

At each location, a sample of the lake bed sediment was collected using a box core sampler. The sample was retrieved to the barge deck, and the shear strength was measured using a hand-held torvane tool.

At the CPT locations, protective casing was lowered a few feet into the lake bed sediments prior to advancing the instrumented cone tip and rods. At all three CPT locations, a dense sand layer was encountered directly below the lake bed sediments. This caused CPT refusal; it was agreed between CRA and Ocean and Coastal Consultants (OCC), the Owner's engineer, to drill through the sand in order to resume the CPT soundings. The drilling and sampling was completed using sonic drilling and sampling tubes. The samples were placed in core boxes. After drilling through the upper dense layers, the CPT rods were advanced by pushing with the hydraulics of the drill rig. At location CPT-3A, the CPT sounding data included shear wave velocity measurements in the soil. Upon reaching refusal on what is presumed to be the expected glacial till, the CPT soundings were grouted as the rods were pulled back out.

The CPT-3 location was offset. While setting the jack-up columns for the barge, the columns continued to sink which prevented the barge from being completely out of the water. This caused an unsafe drilling condition, as wave action could become uncontrolled while drilling. There is apparently a deeper layer of soft soil at this location that could not support the weight of the jack-up barge.

The borehole BH-1 was drilled with a truck-mounted drill rig using sonic drilling and Shelby tubes sampling in overburden soils and NQ core barrels in the underlying bedrock. Representative undisturbed samples of the soft to stiff overburden soils were obtained by using a 3-inch diameter thin walled tube in general accordance with ASTM D-1587. Continuous coring of bedrock was completed. The percent recovery and rock quality designation (RQD) is recorded on the borehole log. After reaching the total depth, the borehole was reamed out with a rotary drill bit to prepare the borehole wall for geophysical survey. Probes were lowered into the borehole for mass density measurement, and for compression and shear wave (P-S wave) velocity measurement. The density and P-S wave results are included in the Appendix. The borehole was grouted upon completion.

The exposed parts of the sonic samples obtained from the borehole were visually classified in the field upon retrieval for type, texture, color and moisture condition in general accordance with ASTM D 2488. The Shelby tube samples were sealed with wax in the field, and transported to our geotechnical laboratory for further examination and testing. Likewise, the rock cores were field described for composition, color, and hardness. OCC determined which samples would be subject to laboratory testing. The

type and number of tests were also determined by OCC. The laboratory tests are included in the Appendix.

3.0 SITE AND SUBSURFACE CONDITIONS

Details of the subsurface soil conditions encountered at the site are summarized below and are also presented on the accompanying Borehole Log in Appendix A. It should be noted that the subsurface conditions are confirmed at the borehole location only, and may vary at other locations both horizontally and vertically. The boundaries between the various strata, as shown on the borehole log, are based on non-continuous sampling. These boundaries represent an inferred transition between the various strata, rather than a precise plane of geological change.

3.1 BOREHOLE RESULTS

Approximately 2 feet of lake bed sediments were encountered at the location of borehole BH-1. The sediments consisted of fine-grained sand and silt. Based on the torvane results, the shear strength is essentially zero.

Dense sand – Below the lake sediment to a depth of approximately 19 feet is dense sand with seams of silty clay. The sand is generally fine grained, with some layers of medium to coarse grained containing gravel. Moisture contents in the sand samples range from 11 to 25 percent by dry weight as measured in the laboratory. Dry unit weights range from 106 to 120 pounds per cubic foot (pcf).

Silty Clay – From 19 feet to approximately 68 feet is a soft to firm silty clay. Undrained shear strength values as obtained from laboratory tests range from 355 to 459 pounds per square foot (psf). Moisture contents in the clayey soils ranged from 19 to 33 percent. Dry unit weights range from 80 to 98 pcf. The upper 14 feet (from 19 to 33 feet below the lake bed) is high plasticity clay, with liquid limit of 56 and plasticity index of 31. The underlying clay stratum is a low plasticity clay with liquid limits ranging from 28 to 41 and plasticity index from 12 to 19. One consolidation test was completed on a sample within this stratum (ST-4 from 38 to 40 feet below mudline). The pre-consolidation stress is 1,462 psf, with the coefficient of compression, C_c equal to 0.235.

Clay Till – The clayey soils are further underlain by firm to hard silty clay till, which extends to the bedrock encountered at 88 feet below the mudline. Undrained shear strength values as obtained from laboratory tests are on the order of 1,800 psf. Moisture contents are on the order of 17 percent. The dry unit weight is on the order of 115 pcf.

Limestone Bedrock - Below the clay till, gray limestone was encountered, which extends to the borehole termination depth of 120 feet. The limestone was generally slightly to moderately weathered with RQD values ranging from 5 to 69%. The limestone was

strong to moderately strong and thickly bedded. Unconfined compression test results ranged from 8934 to 9820 pounds per square inch (psi), with unit weights 148 to 162 pcf.

It should be noted that during coring and reaming out the rock formation, flowing water or flowing gas was encountered. The flow was clearly audible at the working platform of the jackup barge. An organic odor was noted. The flow is most likely from a gas (methane, hydrogen sulfide, or natural gas) pocket within the rock formation.

3.2 CPT SOUNDING RESULTS

Below the lake bed sediment, dense layer of sand was encountered at each CPT sounding location. The sandy layer at each CPT location was further underlain by clayey silt/silty clay stratum. Prior to taking CPT sounding, the upper sandy and clayey stratum was drilled and sampled, using sonic sampling technique. CPT sounding was started from depths varying from 13 feet below mudline at CPT-3A location to above 38 feet below mudline at CPT-2 location. The protective casing at CPT-2 location kept sinking under its own weight, and the CPT readings did not start until at depth of 38 feet below the mudline. The correlated soil types based on the cone tip and sleeve friction values recorded during the CPT sounding indicates mostly silts and clays. The CPT cone tip resistance was typically on the order of 20 tons per square foot (tsf). The graphical presentation of CPT soundings is provided in Appendix.

3.3 GEOPHYSICAL RESULTS

The plots of density versus depth are included in Appendix C, and the P-S wave velocities versus depth plots are included in Appendix D. The data above 110 feet was affected by the flowing gas into the borehole, and as such, questionable from 75 feet to 110 feet. The shear wave velocities are consistent with stiff soil from 80 to 95 feet, and sound rock from 110 to 115 feet.

4.0 LIMITATIONS OF THE REPORT

This report is intended solely for the Lake Erie Energy Development Corporation (Client) and other parties explicitly identified in the report, and are prohibited for use by others without Conestoga-Rovers & Associates (CRA) prior written consent. This report is considered CRA's professional work product and shall remain the sole property of CRA. Any unauthorized reuse, redistribution of or reliance on the report shall be at the Client and recipient's sole risk, without liability to CRA. Client shall defend, indemnify and hold CRA harmless from any liability arising from or related to Client's unauthorized distribution of the report. No portion of this report may be used as a separate entity; it is to be read in its entirety and shall include all supporting drawings and appendices.

The recommendations made in this report are in accordance with our present understanding of the project, the current site use, ground surface elevations and conditions, and are based on the work scope approved by the Client and described in the report. The services were performed in a manner consistent with that level of care and skill ordinarily exercised by members of geotechnical engineering professions currently practicing under similar conditions in the same locality. No other representations, and no warranties or representations of any kind, either expressed or implied, are made. Any use which a third party makes of this report, or any reliance on or decisions to be made based on it, are the responsibility of such third parties.

All details of design and construction are rarely known at the time of completion of a geotechnical study. The recommendations and comments made in the study report are based on our subsurface investigation and resulting understanding of the project, as defined at the time of the study. We should be retained to review our recommendations when the drawings and specifications are complete. Without this review, CRA will not be liable for any misunderstanding of our recommendations or their application and adaptation into the final design.

It is important to emphasize that a subsurface investigation is, in fact, a random sampling of a site and the comments included in this report are based on the results obtained at the test locations only (the 1 borehole location and 3 CPT soundings). The subsurface conditions confirmed at the test locations may vary at other locations. The subsurface conditions can also be significantly modified by the construction activities on site (ex. excavation, dewatering and drainage, blasting, pile driving, etc.). These conditions can also be modified by exposure of soils or bedrock to humidity, dry periods or frost. Soil and groundwater conditions between and beyond the test locations may differ both horizontally and vertically from those encountered at the test locations and conditions may become apparent during construction which could not be detected or

anticipated at the time of our investigation. Should any conditions at the site be encountered which differ from those found at the test locations, we request that we be notified immediately in order to permit a reassessment of our recommendations. If changed conditions are identified during construction, no matter how minor, the recommendations in this report shall be considered invalid until sufficient review and written assessment of said conditions by CRA is completed.

FIGURES

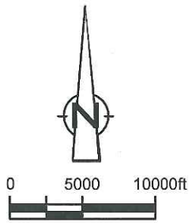

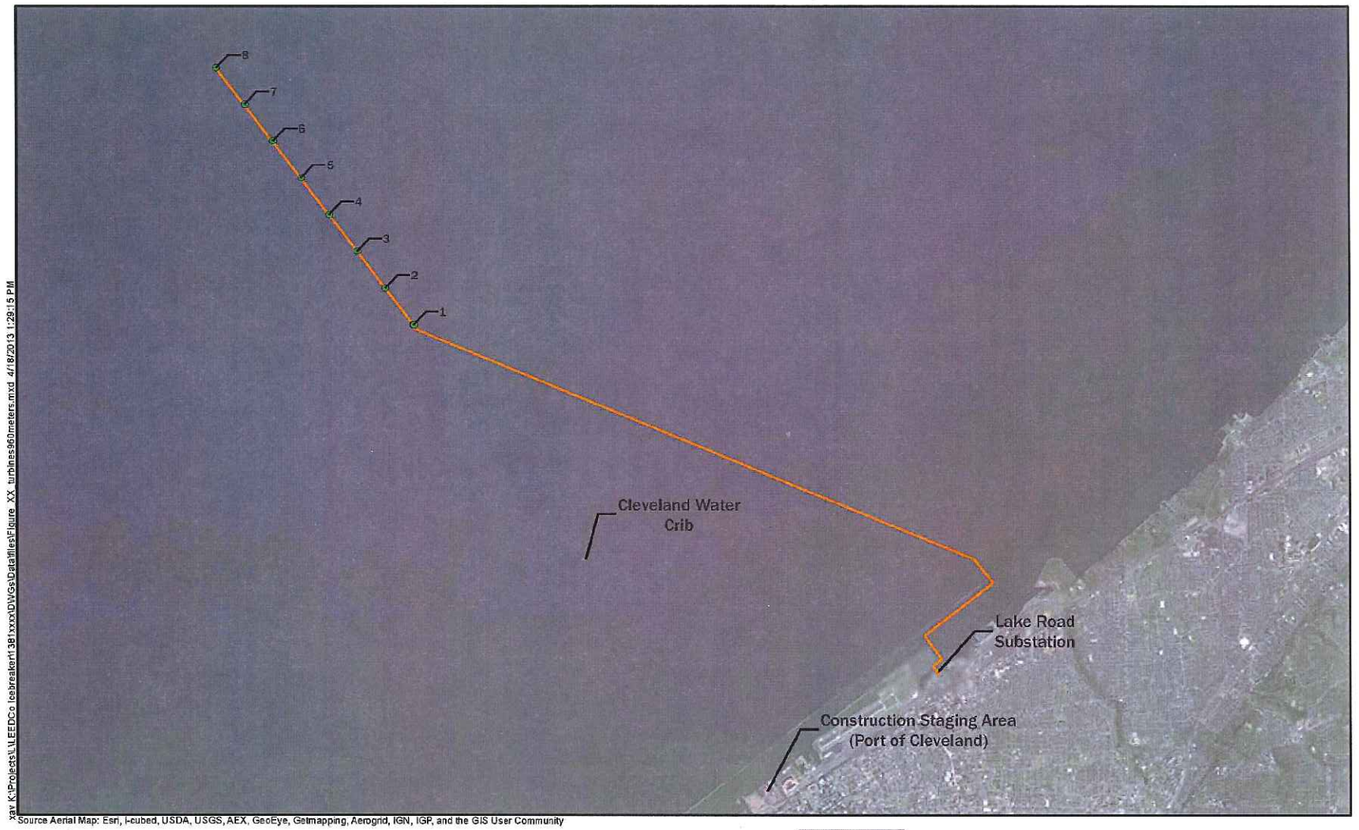

xar K:\Projects\LLEEDCo Icebreaker\1381xxx\DWG\Data\files\Figure_XX_turbines960meters.mxd 4/18/2013 1:29:15 PM

DRAFT

1 Turbine ID/ Proposed Wind Turbine

Submarine Cable

0 5,000 10,000 FEET

PROJECT SITE VICINTY

April 2013

LEEDCo Icebreaker Project
Cuyahoga County, Ohio

URS

FIGURE XX

figure 1

SITE LOCATION MAP
LAKE ERIE ENERGY DEVELOPEMENT CO.
ICEBREAKER PROJECT
Cleveland, Ohio

CRA

082317-00(001)GN-DE001 JUN 14/2013

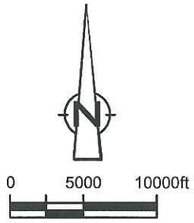

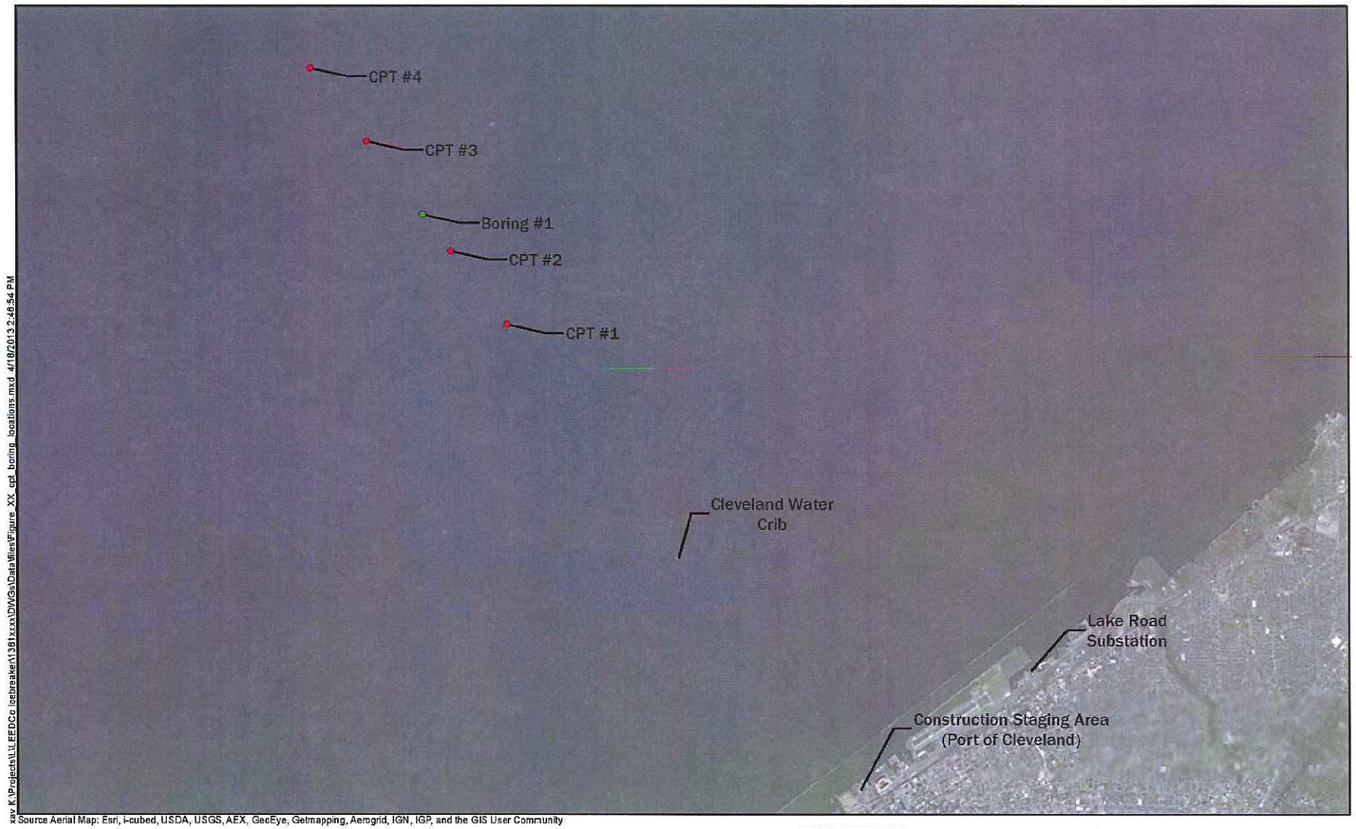

xsw K:\Projects\LLEEDCo Icebreaker\1381xxx\DWGs\Data\files\Figure_XX_cpt_boring_locations.mxd 4/18/2013 2:46:54 PM

DRAFT

2 CPT ID/ Cone Penetration Test

1 Boring ID/ Boring

0 5,000 10,000 FEET

GEOPHYSICAL STUDY

April 2013

LEEDCo Icebreaker Project
Cuyahoga County, Ohio

URS

FIGURE XX

figure 2

GEOTECHNICAL BORING LOCATIONS
LAKE ERIE ENERGY DEVELOPEMENT CO.
ICEBREAKER PROJECT
Cleveland, Ohio

082317-00(001)GN-DE002 JUN 14/2013

APPENDIX A

BOREHOLE LOG AND SOIL CLASSIFICATION NOTES

REFERENCE No.: 082317-10 ENCLOSURE No.:

CONESTOGA-ROVERS & ASSOCIATES

BOREHOLE No.: BH-1
ELEVATION: 510.9 ft

BOREHOLE REPORT

CLIENT: Lake Erie Energy Development Corp.
PROJECT: Project Icebreaker
LOCATION: Cleveland, OH
DESCRIBED BY: R. Khabbaznia/A. Khan CHECKED BY: M. Gentner
DATE (START): May 8, 2013 DATE (FINISH): May 10, 2013

LEGEND
- SS - SPLIT SPOON
- ST - SHELBY TUBE
- RC - ROCK CORE
- - WATER LEVEL
- GS - GRAB SAMPLE

DRILLER: Frontz Drilling DRILL RIG: Versa Sonic

Depth (Feet)	Elevation (ft)	Stratigraphy	DESCRIPTION OF SOIL AND BEDROCK	State	Type and Number	Recovery (%)	Moisture Content	Blows per 6 in.	Penetraion Index (N)
	510.93		GROUND SURFACE						
			Lake level = 571.18 ft. Mud Line = 60.25 feet below lake level. (SM) SAND, some silt and clay, trace gravel						
5					S-1	80	18	--	--
	504.93		6.0						
	504.43		6.5 (CL) CLAY, some sand						
			(SM) Silty SAND, trace clay and gravel						
	501.13		9.8						
10	500.93		10.0 (CL) CLAY						
			(SP) SAND, some fine gravel						
	498.73		12.2						
			(CL) CLAY, some sand		S-2	80	19	--	--
	497.73		13.2						
			(SM) Silty SAND, trace clay and gravel						
15	495.93		15.0						
			(SP) Medium to coarse SAND, some gravel, trace silt						
					S-3	95	--	--	--
	492.18		18.8						
			(CL) CLAY						
20	490.93		20.0						
			(CH) Silty CLAY, trace sand, gray		ST-1	100	33	--	--
25					ST-2	100	--	--	--
30									
	477.93		33.0						
			(CL) Silty CLAY, trace sand, gray		ST-3	--	29	--	--

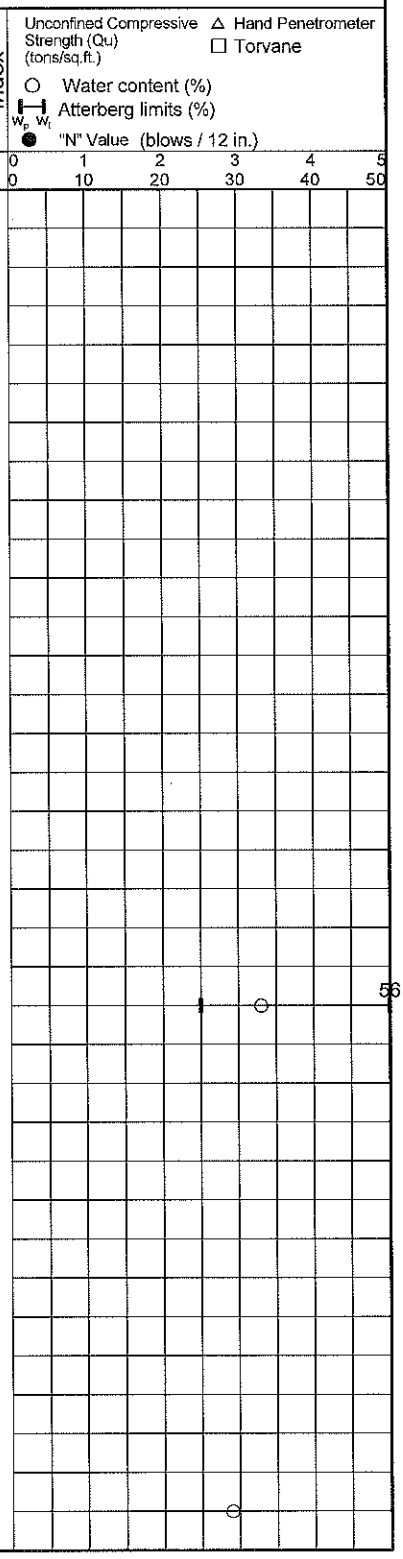

SOIL LOG WITH GRAPH 082317-10 ICEBREAKER - CLEVELAND.GPJ CRA PLYMOUTH.GDT 6/7/13

REFERENCE No.: 082317-10 ENCLOSURE No.:

CONESTOGA-ROVERS & ASSOCIATES

BOREHOLE No.: BH-1
ELEVATION: 510.9 ft

BOREHOLE REPORT

CLIENT: Lake Erie Energy Development Corp.
PROJECT: Project Icebreaker
LOCATION: Cleveland, OH
DESCRIBED BY: R. Khabbaznia/A. Khan CHECKED BY: M. Gentner
DATE (START): May 8, 2013 DATE (FINISH): May 10, 2013

LEGEND
- SS - SPLIT SPOON
- ST - SHELBY TUBE
- RC - ROCK CORE
- WATER LEVEL
- GS - GRAB SAMPLE

DRILLER: Frontz Drilling DRILL RIG: Versa Sonic

Depth	Elevation (ft)	Stratigraphy	DESCRIPTION OF SOIL AND BEDROCK	State	Type and Number	Recovery	Moisture Content	Blows per 6 in.	Penetraion Index
Feet	510.93		GROUND SURFACE			%			N
			(CL) Silty CLAY, trace sand, gray						
40					ST-4	100	--	--	--
45					ST-5	100	32	--	--
50					ST-6	100	--	--	--
55					ST-7	100	19	--	--
60					ST-8	100	--	--	--
65			NO RECOVERY within shelby tubes attempted at 63 or 65 feet.		ST-9	0	--	--	--
					ST-10	0	--	--	--
			70.0						

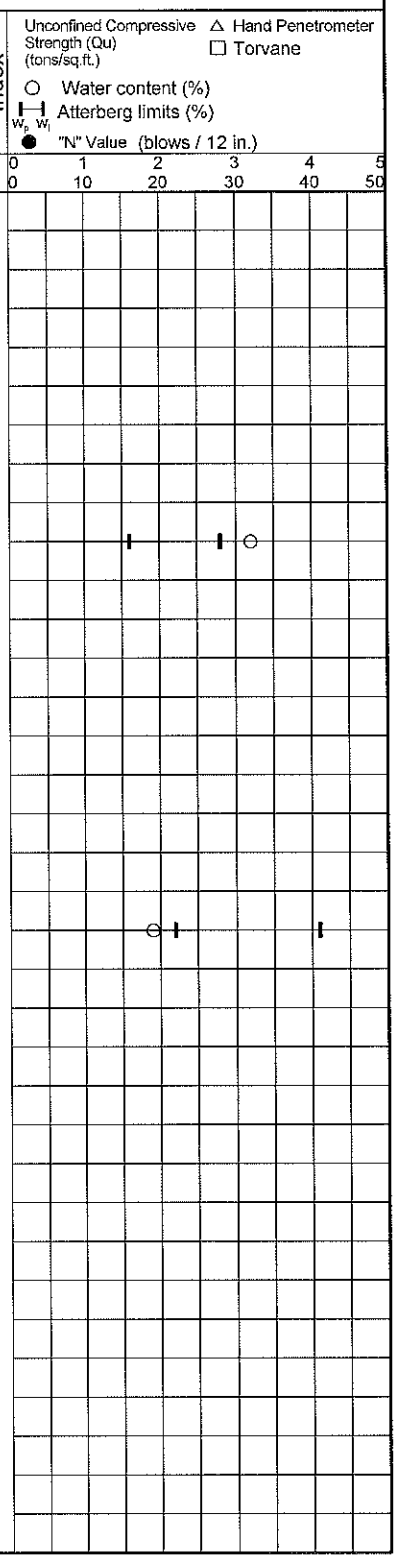

REFERENCE No.: 082317-10 ENCLOSURE No.:

CONESTOGA-ROVERS & ASSOCIATES

BOREHOLE No.: BH-1
ELEVATION: 510.9 ft

BOREHOLE REPORT

CLIENT: Lake Erie Energy Development Corp.
PROJECT: Project Icebreaker
LOCATION: Cleveland, OH
DESCRIBED BY: R. Khabbaznia/A. Khan CHECKED BY: M. Gentner
DATE (START): May 8, 2013 DATE (FINISH): May 10, 2013
DRILLER: Frontz Drilling DRILL RIG: Versa Sonic

LEGEND
- SS - SPLIT SPOON
- ST - SHELBY TUBE
- RC - ROCK CORE
- WATER LEVEL
- GS - GRAB SAMPLE

Depth (Feet)	Elevation (ft)	Stratigraphy	DESCRIPTION OF SOIL AND BEDROCK	State	Type and Number	Recovery (%)	Moisture Content	Blows per 6 in.	Penetraion Index (N)
	510.93		GROUND SURFACE						
	440.93		(CL) Silty CLAY, trace sand, gray		S-4	100	17	--	--
75									
	432.93		78.0 (CL) Silty CLAY TILL, some gravel, trace sand, hard, gray, moist.						
80					S-5	100	--	--	--
85									
	422.93		88.0 (LIMESTONE) LIMESTONE bedrock, trace to some clay, gray to dark gray. Methane odor noted.						
90					S-6	100	--	--	--
95									
	412.93		98.0 (LIMESTONE) LIMESTONE, strong, fresh to slightly weathered, moderately bedded, gray, shale.		S-7	87	--	--	--
100	410.93		100.0 RQD = 57% (LIMESTONE) LIMESTONE, moderately strong, moderately weathered, thickly bedded, gray. RQD = 5%						

Unconfined Compressive Strength (Qu) (tons/sq.ft.) △ Hand Penetrometer ☐ Torvane
○ Water content (%)
W_p W_l Atterberg limits (%)
● "N" Value (blows / 12 in.)

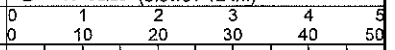

REFERENCE No.: 082317-10

ENCLOSURE No.:

CONESTOGA-ROVERS & ASSOCIATES

BOREHOLE No.: BH-1

ELEVATION: 510.9 ft

BOREHOLE REPORT

CLIENT: Lake Erie Energy Development Corp.

PROJECT: Project Icebreaker

LOCATION: Cleveland, OH

DESCRIBED BY: R. Khabbaznia/A. Khan

CHECKED BY: M. Gentner

DATE (START): May 8, 2013

DATE (FINISH): May 10, 2013

DRILLER: Frontz Drilling

DRILL RIG: Versa Sonic

LEGEND

- SS - SPLIT SPOON
- ST - SHELBY TUBE
- RC - ROCK CORE
- WATER LEVEL
- GS - GRAB SAMPLE

Depth	Elevation (ft)	Stratigraphy	DESCRIPTION OF SOIL AND BEDROCK	State	Type and Number	Recovery	Moisture Content	Blows per 6 in.	Penetraion Index
Feet	510.93		GROUND SURFACE			%			N
			(LIMESTONE) LIMESTONE, moderately strong, moderately weathered, thickly bedded, gray. RQD = 5%		S-8	22	--	--	--
110	400.93		110.0 (LIMESTONE) LIMESTONE, strong, slightly weathered, thickly bedded, gray. RQD = 69%						
115					S-9	84	--	--	--
120	390.93		120.0 END OF BOREHOLE AT 120.0 FEET. Borehole advanced with sonic drilling to 98 feet. Bedrock cored from 98 to 120 feet. Borehole backfilled with 320 gallons of grout.						
125									
130									
135									

Unconfined Compressive Strength (Qu) (tons/sq.ft.) △ Hand Penetrometer ☐ Torvane

○ Water content (%)

W_P W_l Atterberg limits (%)

● "N" Value (blows / 12 in.)

0 1 2 3 4 5
0 10 20 30 40 50

CONESTOGA-ROVERS & ASSOCIATES

CONVENTIONAL SOIL DESCRIPTIONS

Gradation Description and Terminology:

Coarse grained or granular soils have more than 50% of their dry weight retained on a #200 sieve; they are described as boulders, cobbles, gravel or sand. Fine grained soils have less than 50% of their dry weight retained on a #200 sieve; they are described as clay or clayey silt if they are cohesive, and silt if they are non-cohesive. In addition to gradation, granular soils are defined on the bases of their relative in-place density and fine grained soils on the basis of their strength or consistency and their plasticity.

GRAIN SIZE CLASSIFICATION

COBBLES	Greater than 3 inches (76 mm)
GRAVEL	3 in. to No. 4 (4.76 mm)
Coarse Gravel	3 in. to 3/4 in.
Fine Gravel	3/4 in to No. 4 (4.76 mm)
SAND	No. 4 (4.76 mm) to No. 200 (.0.074 mm)
Coarse Sand	No. 4 (4.76 to No. 10 (2.0 mm)
Medium Sand	No. 10 (2.0 mm) to No. 40 (0.42 mm)
Fine Sand	No. 40 (0.42 mm) to No. 200 (0.074 mm)
SILT	No. 200 (0.074 mm) to 0.002 mm
CLAY	Less than 0.002 mm

NOTE: The "No. __" refers to the standard sieve sizes.

COMPONENT PERCENTAGE DESCRIPTORS

Noun(s) (e.g. SAND and GRAVEL)	35 to 50%
Adjective (e.g. SANDY)	20 to 35%
With	10 to 20%
Trace	< 10%

PROPERTY DESCRIPTORS

Stratified	Blocky
Laminated	Lenses/Seams
Fissured	Homogeneous

COHESIVE (CLAYEY) SOIL

CONSISTENCY	UNCONFINED COMPRESSIVE STRENGTH,Qu (tsf)
Very Soft	< 0.25
Soft	0.25 to 0.49
Firm	0.50 to 0.99
Stiff	1.00 to 1.99
Very Stiff	2.00 to 3.99
Hard	> 4.00

NON-COHESIVE (GRANULAR) SOIL

RELATIVE DENSITY	BLOWS PER FOOT (N-VALUE)
Very loose	< 5
Loose	5 to 9
Compact	10 to 29
Dense	30 to 50
Very Dense	> 50

CONESTOGA-ROVERS & ASSOCIATES

SOIL CLASSIFICATION SYSTEM (MODIFIED U.S.C.S.)

MAJOR DIVISIONS					GROUP SYMBOL	TYPICAL DESCRIPTION	LABORATORY CLASSIFICATION CRITERIA	
COARSE-GRAINED SOILS	(MORE THAN HALF BY WEIGHT LARGER THAN THE NO. 200 SIEVE SIZE)	GRAVELS	MORE THAN HALF OF COARSE FRACTION LARGER THAN NO. 4 SIEVE SIZE	CLEAN GRAVELS	GW	WELL GRADED GRAVEL, GRAVEL-SAND MIXTURES	Determine percentages of sand and gravel from grain size curve. Depending on percentage of fines (fraction smaller than No. 200 sieve size), coarse-grained soils are classified as follows: Less than 5 percent.....GW, GP, SW, SP; More than 12 percent.....GM, GC, SM, SC; 5 to 12 percent.....Borderline cases requiring dual symbols	$C_u = \frac{D_{60}}{D_{10}}$ greater than 4; $C_c = \frac{(D_{30})^2}{D_{10} \times D_{60}}$ between 1 & 3
					GP	POORLY GRADED GRAVELS AND GRAVEL-SAND MIXTURES		Not meeting all gradation requirements for GW
				DIRTY GRAVELS	GM	SILTY GRAVELS, GRAVE-SAND-SILT MIXTURES	Atterberg limits below "A" line or PI less than 4	Above "A" line with PI between 4 and 7 are *borderline* cases requiring use of dual symbols
					GC	CLAYEY GRAVELS, GRAVEL-SAND-CLAY MIXTURES	Atterberg limits below "A" line or PI greater than 7	
		SANDS	MORE THAN HALF OF COARSE FRACTION SMALLER THAN NO. 4 SIEVE SIZE	CLEAN SANDS	SW	WELL GRADED SANDS, GRAVELLY SANDS	$C_u = \frac{D_{60}}{D_{10}}$ greater than 6; $C_c = \frac{(D_{30})^2}{D_{10} \times D_{60}}$ between 1 & 3	
					SP	POORLY GRADED SANDS, OR GRAVELLY SAND		Not meeting all gradation requirements for SW
				DIRTY SANDS	SM	SILTY SANDS, SAND-SILT MIXTURES	Atterberg limits below "A" line or PI less than 4	Limits plotting in hatched zone with PI between 4 and 7 are *borderline* cases requiring use of dual symbols
					SC	CLAYEY SANDS, SAND-CLAY MIXTURES	Atterberg limits below "A" line or PI greater than 7	
FINE-GRAINED SOILS	(MORE THAN HALF BY WEIGHT PASSES NO 200 SIEVE SIZE)	SILTS BELOW "A" LINE ON PLASTICITY CHART; NEGLIGIBLE ORGANIC CONTENT			ML	INORGANIC SILTS AND VERY FINE SAND, ROCK FLOUR, SILTY SANDS OF SLIGHT PLACTICITY		
					MH	INORGANIC SILTY, MICACEOUS OR DIATOMACEOUS, FINE SANDY OR SILTY SOILS		
		CLAYS ABOVE "A" LINE ON PLASTICITY CHART; NEGLIGIBLE ORGANIC CONTENT			CL	INORGANIC CLAYS OF LOW PLASTICITY, GRAVELLY, SANDY OR SILTY CLAYS, LEAN CLAYS		
					CH	INORGANIC CLAYS OF HIGH PLASTICITY, FAT CLAYS		
		ORGANIC SILTS & ORGANIC CLAYS BELOW "A" LINE ON PLASTICITY CHART			OL	ORGANIC SILTS AND ORGANIC SILTY CLAYS OF LOW PLASTICITY		
					OH	ORGANIC CLAYS OF HIGH PLASTICITY		
HIGHLY ORGANIC SOILS					PT	PEAT AND OTHER HIGHLY ORGANIC SOILS		

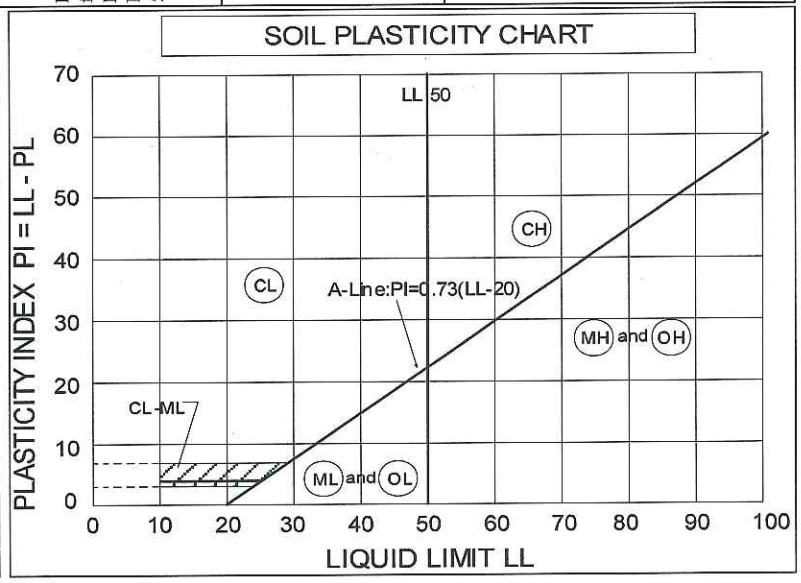

APPENDIX B

CONE PENETRATION TEST LOGS

CONETEC

Conestoga-Rovers & Associates

Job No: 13-53027
Date: 05:05:13 10:48
Site: Project Icebreaker

Sounding: CPT-01
Cone: 323:T1500F15U500

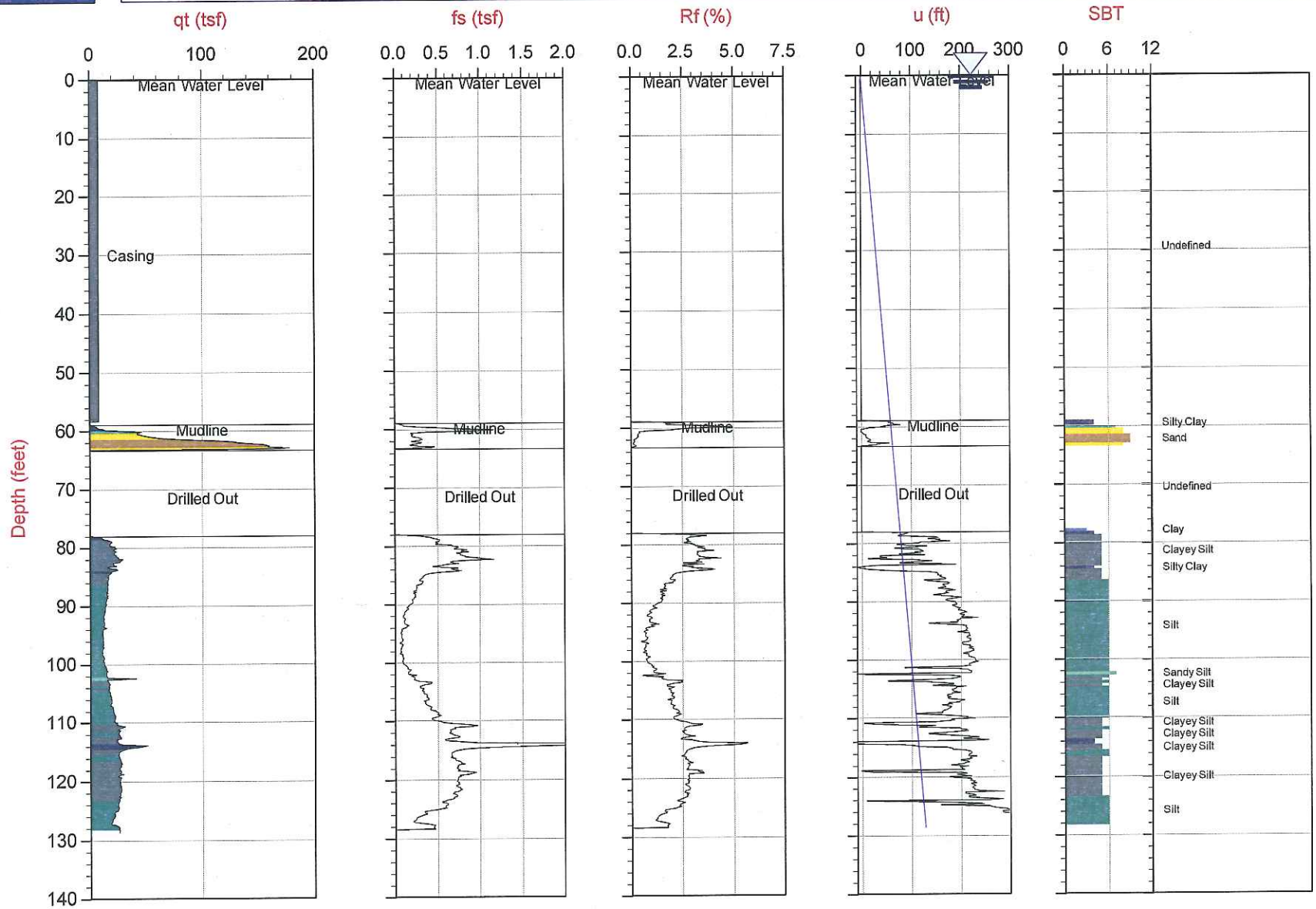

Max Depth: 39.250 m / 128.77 ft
Depth Inc: 0.050 m / 0.164 ft
Avg Int: 0.150 m

File: 13-53027_CP01.COR

SBT: Lunne, Robertson and Powell, 1997
Coords: UTM Zone 17 N: 4604796 E: 433996

CONETEC

Conestoga-Rovers & Associates

Job No: 13-53027
Date: 05:06:13 12:29
Site: Project Icebreaker

Sounding: SCPT-02
Cone: 323:T1500F15U500

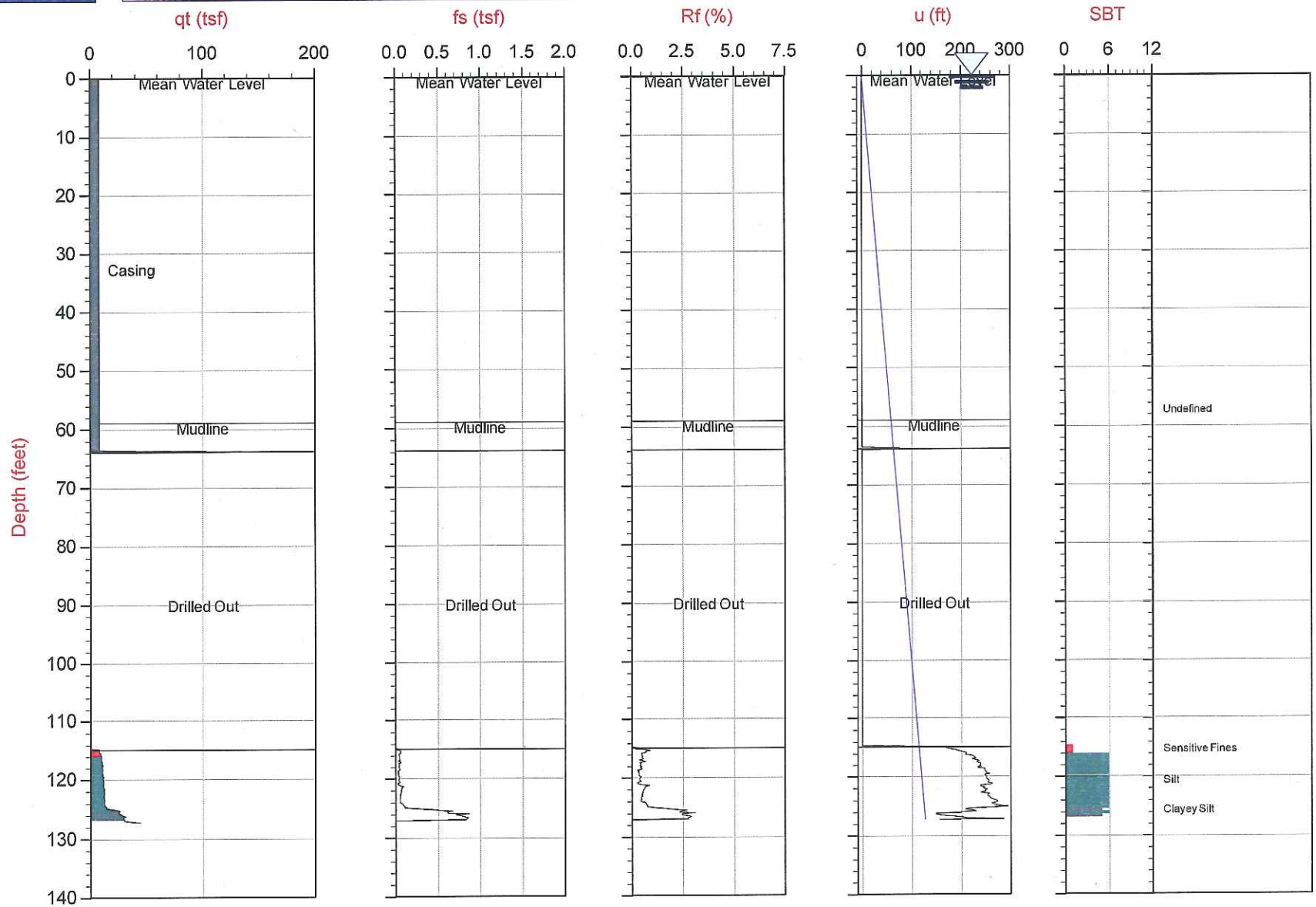

Max Depth: 38.800 m / 127.30 ft
Depth Inc: 0.050 m / 0.164 ft
Avg Int: 0.150 m

File: 13-53027_CP02.COR

SBT: Lunne, Robertson and Powell, 1997
Coords: UTM Zone 17 N: 4606332 E: 432850

CONETEC

Conestoga-Rovers & Associates

Job No: 13-53027
Date: 05:07:13 02:05
Site: Project Icebreaker

Sounding: SCPT-03A
Cone: 322:T1500F15U500

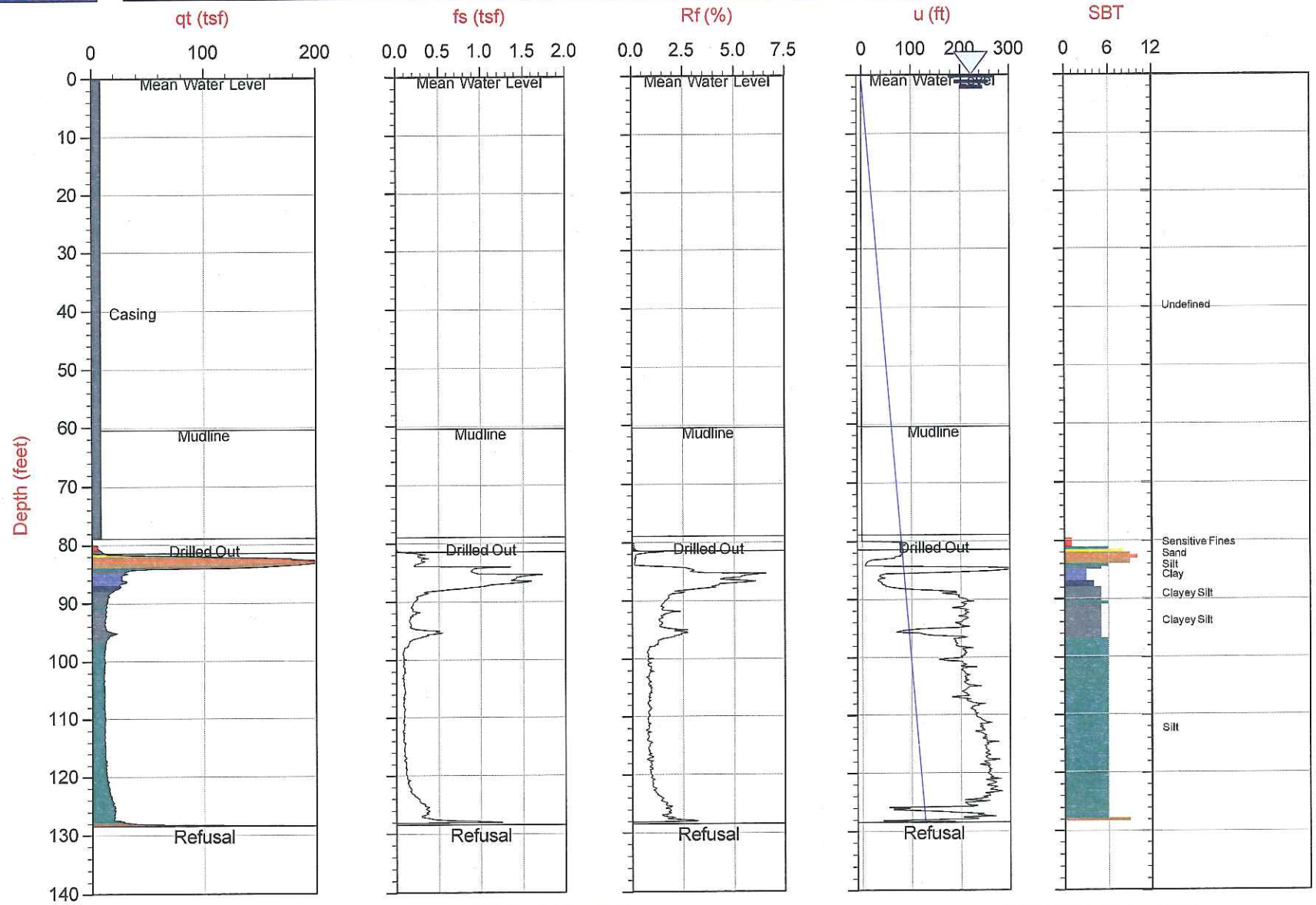

Max Depth: 39.150 m / 128.44 ft
Depth Inc: 0.050 m / 0.164 ft
Avg Int: 0.150 m

File: 13-53027_SP03A.COR

SBT: Lunne, Robertson and Powell, 1997
Coords: UTM Zone 17 N: 4607862 E: 431692

Job No: 13-53027
Client: Conestoga-Rovers Associates
Project: LEEDCo CPTU Project
Sounding: SCPT-03
Date: May 7, 2013

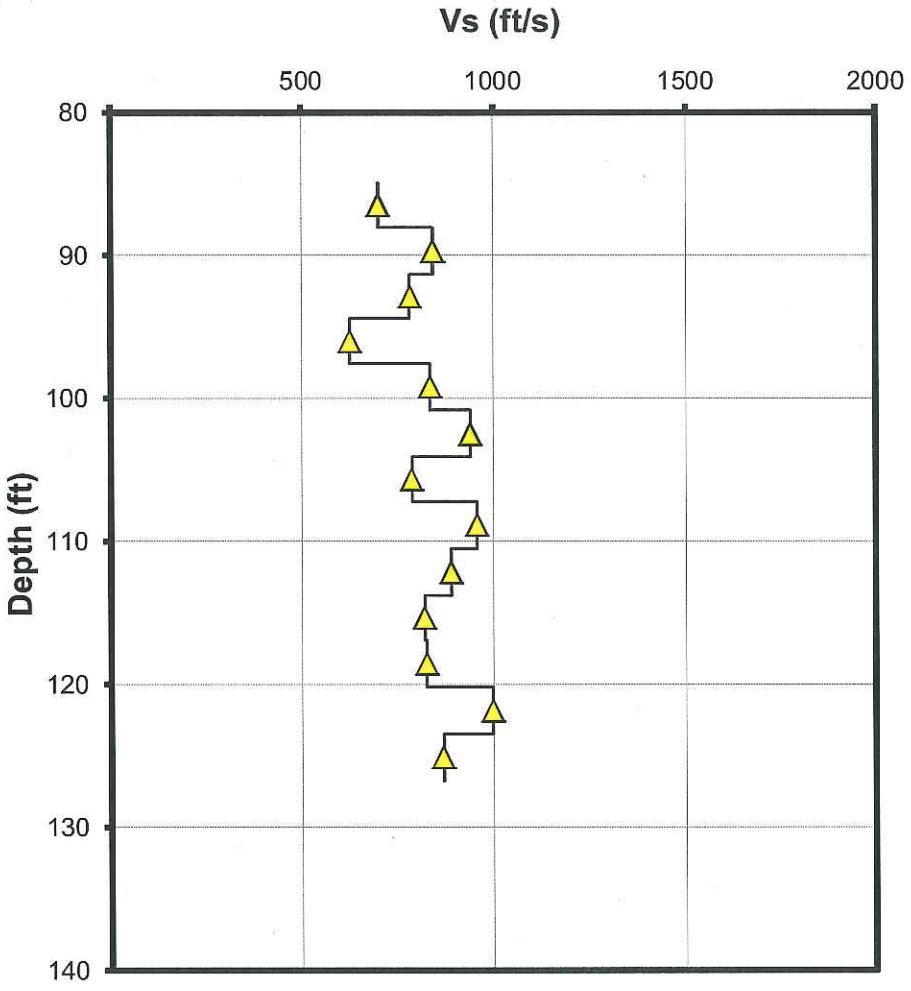

Job No	13-53027
Client	Conestoga-Rovers & Associates
Project Title	LEEDCo CPTU Project
Hole	SCPT-03
Site	Cleveland, Ohio
Date	5/7/2013

Seismic Source:	Beam	
Source Offset:	19.35	(ft)
Source Depth:	68.50	(ft)
Geophone Offset:	0.66	(ft)

SEISMIC TEST RESULTS - Vs

Tip Depth (ft)	Geophone Depth (ft)	Ray Path (ft)	Depth Interval (ft)	Time Interval (ms)	Mid-layer Depth (ft)	Vs Interval Velocity (ft/s)
85.60	84.94	25.39				
88.71	88.05	27.51	2.12	3.02	86.50	701
91.99	91.33	29.93	2.42	2.87	89.69	843
95.08	94.42	32.35	2.42	3.09	92.88	783
98.20	97.54	34.90	2.55	4.07	95.98	627
101.48	100.82	37.67	2.77	3.32	99.18	835
104.76	104.10	40.52	2.85	3.03	102.46	940
107.87	107.21	43.28	2.76	3.50	105.66	788
111.15	110.49	46.24	2.96	3.09	108.85	957
114.44	113.78	49.24	3.01	3.38	112.14	890
117.55	116.89	52.12	2.87	3.50	115.34	821
120.83	120.17	55.18	3.06	3.70	118.53	827
124.11	123.45	58.26	3.08	3.09	121.81	998
127.40	126.74	61.37	3.11	3.58	125.10	870

APPENDIX C

IN-SITU DENSITY RESULTS

BOREHOLE GEOPHYSICS & HYDROPHYSICS
COLOG
A DIVISION OF LAYNE CHRISTENSEN COMPANY

810 Quail St. Suite E
Lakewood, Colorado
80215
Office: 303.279.0171
FAX: 303.278.0135
www.colog.com

Focused Density Caliper

Run 1

Company CRA
Well Boring #1
Field Lake Erie
County
State Ohio

COMPANY Connestoga Rovers Associates
WELL Boring #1
FIELD Lake Erie
COUNTY **STATE** Ohio

LOCATION
50,000ft from Lake Erie shore

QTR **SEC** **TWP** **RGE**

OTHER SERVICES

PERMANENT DATUM Mud Level **ELEVATION**
LOG MEAS. FROM Mud Level 0.0 ft **ABOVE PERMINANT DATUM**
DRILLING MEAS. FROM Mud Level

DATE ACQUIRED	9 May 2013			
RUN NUMBER	1			
LOG TYPE	Density			
DEPTH-DRILLER				
DEPTH-LOGGER	118'			
BTM LOG INTERVAL	117'			
TOP LOG INTERVAL	-69'			
RECORDED BY	C. O'Neil			
WITNESSED BY	R. Hamilton			
PROBE TYPE, S/N	HLP-M 0001			
LOGGING SPEED	10.9 ft/min			
A.S.D.E.	0'			
SAMPLE INTERVAL	0.1 ft/min			

BOREHOLE RECORD				**CASING RECORD**			
RUN No.	**BIT**	**FROM**	**TO**	**SIZE**	**WGT.**	**FROM**	**TO**
	6"	TD	Survace Casing	Drill Rods		Barge	97'

NA - Not Available, N/A - Not Applicable

COMMENTS

72' from top of barge to mud.

Plots referenced to Mud Level.

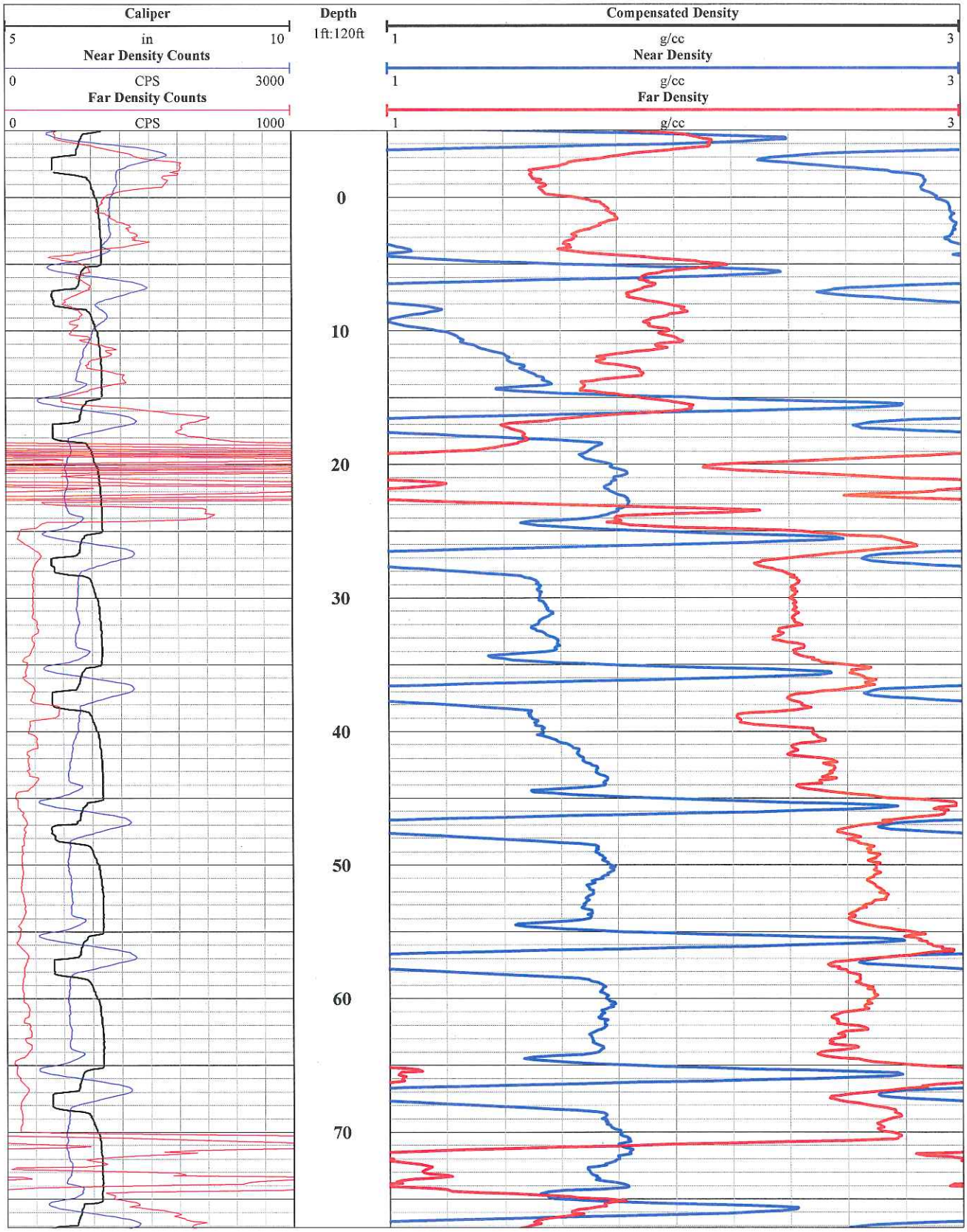
Caliper
5 in 10
Near Density Counts
0 CPS 3000
Far Density Counts
0 CPS 1000
Depth
1ft:120ft
0
10
20
30
40
50
60
70
Compensated Density
1 g/cc 3
Near Density
1 g/cc 3
Far Density
1 g/cc 3

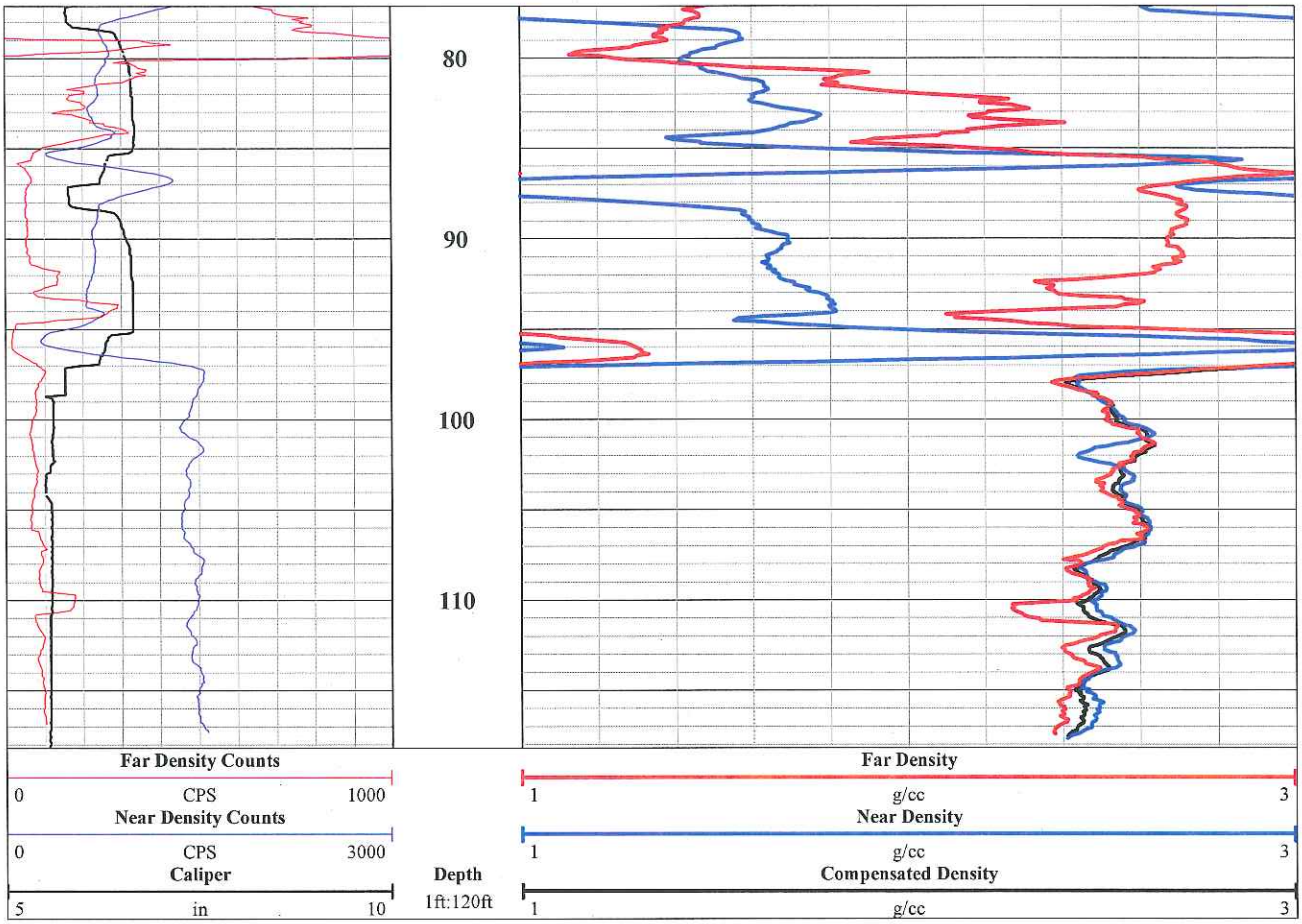
80
90
100
110
Far Density Counts
0 CPS 1000
Near Density Counts
0 CPS 3000
Caliper
5 in 10
Depth
1ft:120ft
Far Density
1 g/cc 3
Near Density
1 g/cc 3
Compensated Density
1 g/cc 3

BOREHOLE GEOPHYSICS & HYDROPHYSICS
COLOG
A DIVISION OF LAYNE CHRISTENSEN COMPANY

810 Quail St. Suite E
Lakewood, Colorado
80215
Office: 303.279.0171
FAX: 303.278.0135
www.colog.com

Focused Density Caliper

Run 2

COMPANY	Connestoga Rovers Associates
WELL	Boring #1
FIELD	Lake Erie
COUNTY	
STATE	Ohio

Company CRA
Well Boring #1
Field Lake Erie
County
State Ohio

LOCATION
50,000ft from Lake Erie shore

QTR SEC TWP RGE

OTHER SERVICES

PERMANENT DATUM Mud Level ELEVATION
LOG MEAS. FROM Mud Level 0.0 ft ABOVE PERMINANT DATUM
DRILLING MEAS. FROM Mud Level

DATE ACQUIRED	10 May 2013			
RUN NUMBER	2			
LOG TYPE	Density			
DEPTH-DRILLER				
DEPTH-LOGGER	128'			
BTM LOG INTERVAL	127'			
TOP LOG INTERVAL	-69'			
RECORDED BY	C. O'Neil			
WITNESSED BY	R. Hamilton			
PROBE TYPE, S/N	HLP-M 0001			
LOGGING SPEED	10.9 ft/min			
A.S.D.E.	0'			
SAMPLE INTERVAL	0.1 ft/min			

BOREHOLE RECORD				CASING RECORD			
RUN No.	BIT	FROM	TO	SIZE	WGT.	FROM	TO
	6"	TD	Survace Casing	Drill Rods		Barge	72'

NA - Not Available, N/A - Not Applicable

COMMENTS

72' from top of barge to mud.

Plots referenced to Mud Level.

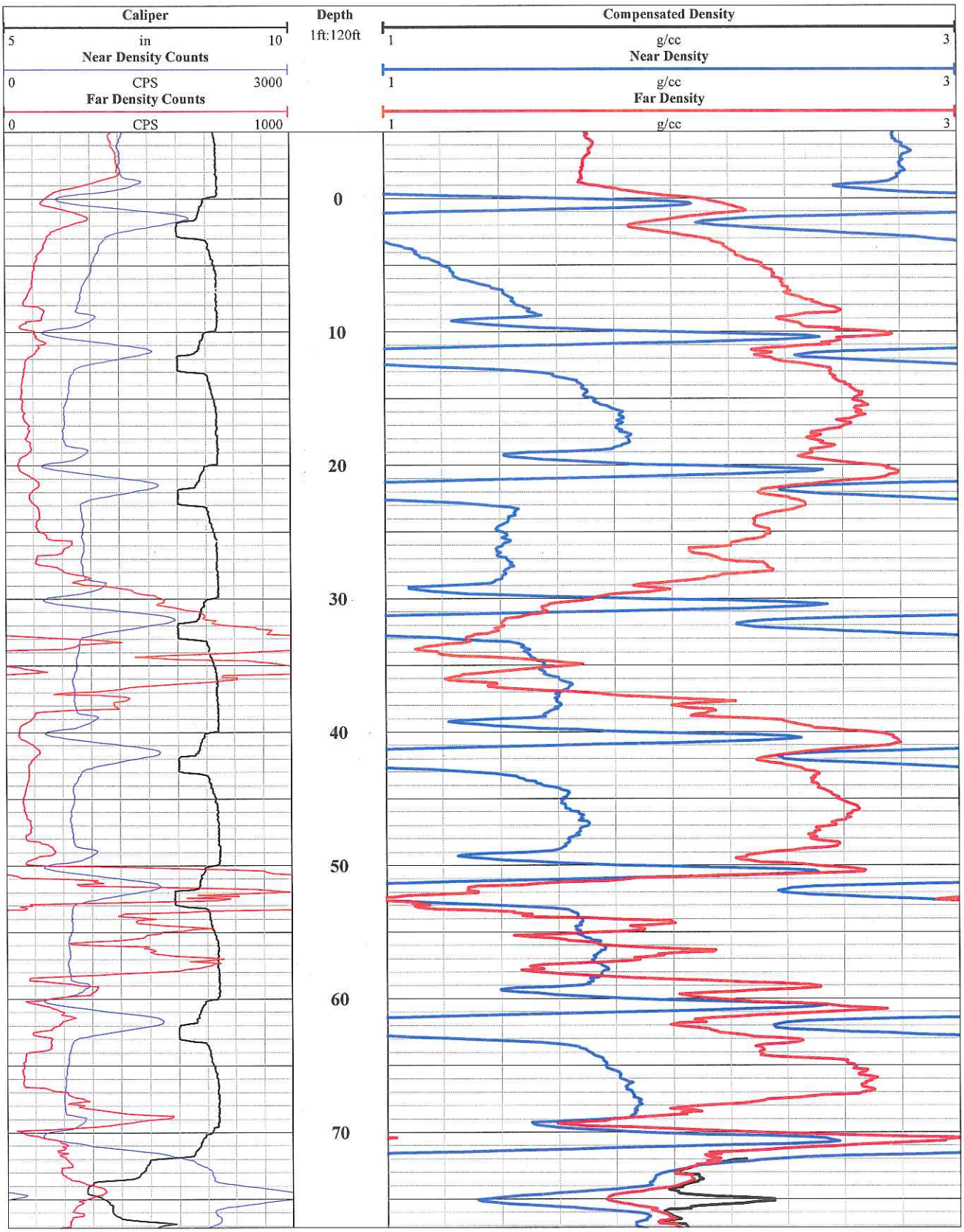
Caliper
5 in 10
Near Density Counts
0 CPS 3000
Far Density Counts
0 CPS 1000
Depth
1ft:120ft
0
10
20
30
40
50
60
70
Compensated Density
1 g/cc 3
Near Density
1 g/cc 3
Far Density
1 g/cc 3

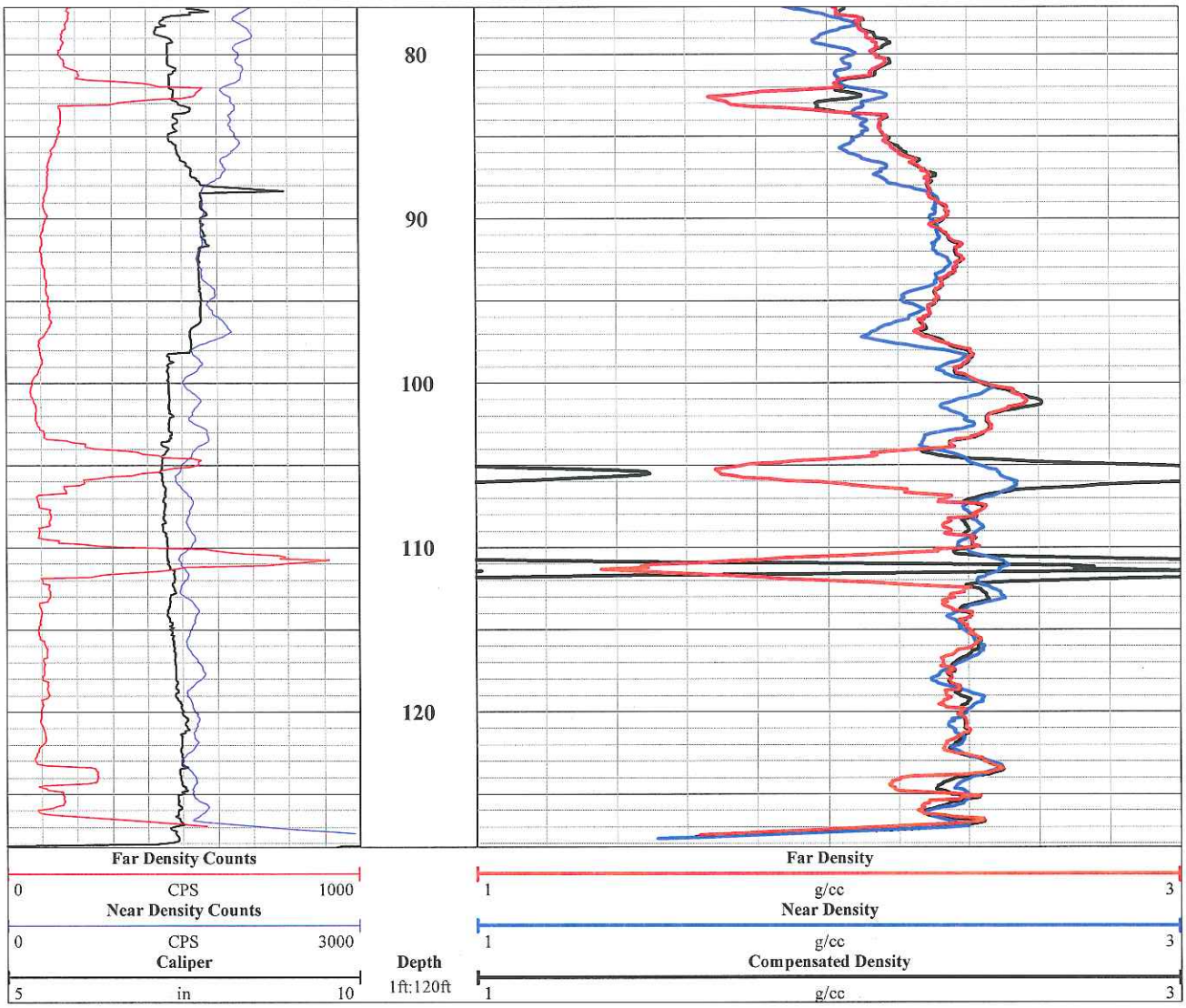
80
90
100
110
120
Far Density Counts
0 CPS 1000
Near Density Counts
0 CPS 3000
Caliper
5 in 10
Depth
1ft:120ft
Far Density
1 g/cc 3
Near Density
1 g/cc 3
Compensated Density
1 g/cc 3

APPENDIX D

P-S WAVE LOGGING RESULTS

GEOVision
geophysical services

LAKE ERIE, ICEBREAKER WIND FARM

BOREHOLE GEOPHYSICS

BORING 1

June 9, 2013

Report 13141-01 rev 0

LAKE ERIE, ICEBREAKER WIND FARM

BOREHOLE GEOPHYSICS

BORING 1

Prepared for

IDS LLC
819 Quail Street, Suite E
Lakewood, Colorado 80215
(303) 279-0171

Prepared by

GEOVision Geophysical Services
1124 Olympic Drive
Corona, California 92881
(951) 549-1234
Project 13015

June 9, 2013

Report 13141-01 rev 0

TABLE OF CONTENTS

TABLE OF CONTENTS 3

TABLE OF FIGURES 4

TABLE OF TABLES 4

TABLE OF APPENDICES 4

INTRODUCTION 5

SCOPE OF WORK 5

INSTRUMENTATION 5

SUSPENSION VELOCITY INSTRUMENTATION 5

MEASUREMENT PROCEDURES 9

SUSPENSION VELOCITY MEASUREMENT PROCEDURES 9

DATA ANALYSIS 10

SUSPENSION VELOCITY ANALYSIS 10

RESULTS 13

SUSPENSION VELOCITY RESULTS 13

SUMMARY 14

DISCUSSION OF SUSPENSION VELOCITY RESULTS 14

QUALITY ASSURANCE 15

Table of Figures

Figure 1: Concept illustration of P-S logging system 16
Figure 2: Example of filtered (1400 Hz lowpass) record 17
Figure 3: Example of unfiltered record 18
Figure 4: Boring 1, Suspension R1-R2 P- and S_H-wave velocities 19

Table of Tables

Table 1. Boring locations and logging dates 15
Table 2. Logging dates and depth ranges 15
Table 3. Boring 1, Suspension R1-R2 depths and P- and S_H-wave velocities 20

TABLE OF APPENDICES

APPENDIX A SUSPENSION VELOCITY MEASUREMENT QUALITY ASSURANCE SUSPENSION SOURCE TO RECEIVER ANALYSIS RESULTS

APPENDIX B GEOPHYSICAL LOGGING SYSTEMS - NIST TRACEABLE CALIBRATION RECORDS

INTRODUCTION

Borehole geophysical data were acquired in one boring at the Icebreaker Wind Farm site on Lake Erie near Cleveland, Ohio. Data acquisition was performed on May 10, 2013 by Chuck Carter of **GEO***Vision* from a jack-up barge. Data analysis and report preparation was performed by Emily Feldman and Victor Gonzalez and reviewed by Robert Steller of **GEO***Vision*. The work was performed under subcontract with International Directional Services LLC (IDS) with Nathan Davis as the point of contact for IDS.

This report describes the field measurements, data analysis, and results of this work.

SCOPE OF WORK

This report presents the results of geophysical borehole data acquired in boring 1 on May 10, 2013 at the Icebreaker Wind Farm site on Lake Erie near Cleveland, Ohio. Suspension velocity data were acquired in one uncased borehole, as detailed in Table 1. The purpose of these studies was to supplement IDS's soil sampling and rock coring program, and to obtain P and S_H-wave velocities as a function of depth.

INSTRUMENTATION

Suspension Velocity Instrumentation

Suspension soil velocity measurements were performed below the steel surface casing using the Suspension PS logging system, manufactured by OYO Corporation, and their subsidiary, Robertson Geologging. This system directly determines the average velocity of a 3.3-foot high segment of the soil column surrounding the boring of interest by measuring the elapsed time between arrivals of a wave propagating upward through the soil column. The receivers that detect the wave, and the source that generates the wave, are moved as a unit in the boring producing relatively constant amplitude signals at all depths.

The suspension system probe consists of a combined reversible polarity solenoid horizontal shear-wave source (S_H) and compressional-wave source (P), joined to two biaxial receivers by a flexible isolation cylinder, as shown in Figure 1. The separation of the two receivers is 3.28 feet, allowing average wave velocity in the region between the receivers to be determined by inversion of the wave travel time between the two receivers. The total length of the probe as used in these surveys is 20.6 feet, with the center point of the receiver pair 12.5 feet above the bottom end of the probe.

The probe receives control signals from, and sends the digitized receiver signals to, instrumentation on the surface via an armored multi-conductor cable. The cable is wound onto the drum of a winch and is used to support the probe. Cable travel is measured to provide probe depth data, using a sheave of known circumference fitted with a digital rotary encoder.

The entire probe is suspended in the boring by the cable, therefore, source motion is not coupled directly to the boring walls; rather, the source motion creates a horizontally propagating impulsive pressure wave in the fluid filling the boring and surrounding the source. This pressure wave is converted to P and S_H-waves in the surrounding soil and rock. These waves propagate through the soil and rock surrounding the boring, in turn causing a pressure wave to be generated in the fluid surrounding the receivers as the soil waves pass their locations. Direct arrival of the original pressure pulse in the fluid is not detected at the receivers because the wavelength of the pressure pulse in fluid is significantly greater than the dimension of the fluid annulus surrounding the probe (foot versus inch scale), preventing significant energy transmission through the fluid medium. Separation of the P and S_H-waves observed at the receivers occurs due to the following factors:

1. Orientation of the horizontal receivers is maintained parallel to the axis of the source, maximizing the amplitude of the recorded S_H -wave signals relative to the P-wave signals.
2. At each depth, S_H-wave signals are recorded with the source actuated in opposite directions, producing S_H-wave signals of opposite polarity, providing a characteristic S_H-wave signature distinct from the P-wave signal.

3. The 6.3 foot separation of source and receiver 1 permits the P-wave signal to pass and damp significantly before the slower S_H-wave signal arrives at the receiver. In faster soils or rock, the isolation cylinder may be extended to allow greater separation of the P- and S_H-wave signals.
4. In saturated soils, the received P-wave signal is typically of much higher frequency than the received S_H-wave signal, permitting additional separation of the two signals by low pass filtering.
5. Direct arrival of the original pressure pulse in the fluid is not detected at the receivers because the wavelength of the pressure pulse in fluid is significantly greater than the dimension of the fluid annulus surrounding the probe (feet versus inches scale), preventing significant energy transmission through the fluid medium.

In operation, a distinct, repeatable pattern of impulses is generated at each depth as follows:

1. The source is fired in one direction producing dominantly horizontal shear energy with some vertical compression energy, and the signals from the horizontal receivers situated parallel to the axis of motion of the source are recorded.
2. The source is fired again in the opposite direction and the horizontal receiver signals are recorded.
3. The source is fired again and the vertical receiver signals are recorded. The repeated source pattern facilitates the picking of the P and S_H-wave arrivals as reversal of the source changes the polarity of the S_H-wave pattern but not the P-wave pattern.

The data from each receiver during each source activation is recorded as a different channel on the recording system. The Suspension PS system has six channels (two simultaneous recording channels), each with a 1024 sample record length. The recorded data are displayed as six channels with a common time scale. Data are stored on disk for further processing. Up to 8 sampling sequences can be summed to improve the signal to noise ratio of the signals.

Review of the displayed data on the recorder or computer screen allows the operator to set the gains, delay time, pulse length (energy), sample rate, and summing number to optimize the quality of the data before recording. Verification of the calibration of the Suspension PS digital recorder is performed every twelve months using a NIST traceable frequency source and counter, as outlined in Appendix B.

MEASUREMENT PROCEDURES

Suspension Velocity Measurement Procedures

Suspension velocity data were collected in one uncased borehole, boring 1. This boring was located offshore in Lake Erie and filled with water during logging. Measurements followed the **GEO***Vision* Procedure for P-S Suspension Seismic Velocity Logging, revision 1.5. Prior to the logging run, the probe was positioned with the mid-point of the receivers at the level of the jack-up barge deck and the depth indicator was set to zero, so that all depth values are referenced to barge deck level. The probe was lowered to the bottom of the boring, stopping at 1.64 foot intervals below the steel surface casing to collect data, as summarized in Table 2.

At each depth interval two opposite horizontal records and one vertical record were acquired. The data from each depth were viewed on the computer display, checked to verify acceptable signal levels, and saved to disk before moving to the next depth.

Upon completion of the measurements, the probe was returned to the surface and depth control was verified at the reference point prior to removal from the boring.

DATA ANALYSIS

Suspension Velocity Analysis

Using the proprietary OYO program PSLOG.EXE version 1.0, the recorded digital waveforms were analyzed to locate the most prominent first minima, first maxima, or first break on the vertical axis records, indicating the arrival of P-wave energy. The difference in travel time between receiver 1 and receiver 2 (R1-R2) arrivals was used to calculate the P-wave velocity for that 3.3-foot segment of the soil column. When observable, P-wave arrivals on the horizontal axis records were used to verify the velocities determined from the vertical axis data. The time picks were transferred into a Microsoft Excel® template (version 2003 SP2) to complete the velocity calculations based upon the arrival time picks made in PSLOG and actual R1-R2 separation.

The P-wave velocity over the 6.3-foot interval from source to receiver 1 (S-R1) was also picked using PSLOG, and calculated and plotted in Microsoft Excel®, for verification of the velocity derived from the travel time between receivers. In this analysis, the depth values as recorded were increased by 5.2 feet to correspond to the mid-point of the 6.3-foot S-R1 interval. Travel times were obtained by picking the first break of the P-wave signal at receiver 1 and subtracting 0.3 milliseconds, the calculated and experimentally verified delay from source trigger pulse (beginning of record) to source impact. This delay corresponds to the duration of acceleration of the solenoid before impact.

As with the P-wave records, using PSLOG, the recorded digital waveforms were analyzed to locate the presence of clear S_H-wave pulses, as indicated by the presence of opposite polarity pulses on each pair of horizontal records. Ideally, the S_H-wave signals from the 'normal' and 'reverse' source pulses are very nearly inverted images of each other. Digital FFT - IFFT lowpass filtering was used to remove the higher frequency P-wave signal from the S_H-wave signal. Different filter cutoffs were used to separate P- and S_H-waves at different depths, ranging from 600 Hz in the slowest zones to 3000 Hz in the regions of highest velocity. At each

depth, the filter frequency was selected to be at least twice the fundamental frequency of the S_H-wave signal being filtered.

Generally, the first maxima were picked for the 'normal' signals and the first minima for the 'reverse' signals, although other points on the waveform were used if the first pulse was distorted. The absolute arrival time of the 'normal' and 'reverse' signals may vary by +/- 0.2 milliseconds, due to differences in the actuation time of the solenoid source caused by constant mechanical bias in the source or by boring inclination. This variation does not affect the R1-R2 velocity determinations, as the differential time is measured between arrivals of waves created by the same source actuation. The final velocity value is the average of the values obtained from the 'normal' and 'reverse' source actuations.

As with the P-wave data, S_H-wave velocity calculated from the travel time over the 6.3-foot interval from source to receiver 1 was calculated and plotted for verification of the velocity derived from the travel time between receivers. In this analysis, the depth values were increased by 5.2 feet to correspond to the mid-point of the 6.3-foot S-R1 interval. Travel times were obtained by picking the first break of the S_H-wave signal at the near receiver and subtracting 0.3 milliseconds, the calculated and experimentally verified delay from the beginning of the record at the source trigger pulse to source impact.

Poisson's Ratio, **ν**, is calculated by the Microsoft Excel® template using the following formula:

$$\nu = \frac{\left(\frac{v_s}{v_p}\right)^2 - 0.5}{\left(\frac{v_s}{v_p}\right)^2 - 1.0}$$

These data and analysis were reviewed by Robert Steller as a component of **GEO***Vision*'s in-house data validation program.

Figure 2 shows an example of R1 - R2 measurements on a sample filtered suspension record. In Figure 2, the time difference over the 3.3-foot interval of 1.88 milliseconds for the horizontal signals is equivalent to an S_H-wave velocity of 1745 feet/second. Whenever possible, time differences were determined from several phase points on the S_H-waveform records to verify the data obtained from the first arrival of the S_H-wave pulse. Figure 3 displays the same record before filtering of the S_H-waveform record with a 1400 Hz FFT - IFFT digital lowpass filter, illustrating the presence of higher frequency P-wave energy at the beginning of the record, and distortion of the lower frequency S_H-wave by residual P-wave signal.

RESULTS

Suspension Velocity Results

Suspension R1-R2 P- and S_H-wave velocities for Boring 1 are plotted in Figure 4. The suspension velocity data presented in this figure are presented in Table 3. These plots and data are included in the Microsoft Excel® analysis file accompanying this report.

P- and S_H-wave velocity data from R1-R2 analysis and quality assurance analysis of S-R1 data are plotted together in Appendix A (as Figure A-1) to aid in visual comparison. It should be noted that R1-R2 data are an average velocity over a 3.3-foot segment of the soil column; S-R1 data are an average over 6.3 feet, creating a significant smoothing relative to the R1-R2 plots. The velocity data presented in these figures are also presented in Table A-1 for quality assurance purposes. S-R1 data are also included in the Microsoft Excel® analysis files on the data disk (CD-R) that accompanies this report. The Microsoft Excel® analysis files include Poisson's Ratio calculations, tabulated data and plots.

Calibration records for the suspension PS measurement system are presented in Appendix B.

SUMMARY

Discussion of Suspension Velocity Results

Suspension PS velocity data are ideally collected in uncased fluid filled borings, drilled with rotary mud (rotary wash) methods. Though the boring preparation was suitable, this boring was not ideal for collection of suspension PS velocity data due to significant gas or water flow in the boring. Based upon the nature of the signals, it appears that there may be fractures in the bedrock just below the bedrock contact that permitted water or gas trapped in the bedrock formation to escape into the boring. This flow produced seismic signals of much greater amplitude than that produced by the probe source.

Suspension PS velocity data quality is judged based upon 5 criteria:

1. Consistent data between receiver to receiver (R1 – R2) and source to receiver (S – R1) data.
2. Consistent relationship between P-wave and S_H -wave (excluding transition to saturated soils)
3. Consistency between data from adjacent depth intervals.
4. Clarity of P-wave and S_H-wave onset, as well as damping of later oscillations.
5. Consistency of profile between adjacent borings, if available.

Only 4 of these data depths in bedrock show good correlation between R1 – R2 and S – R1 data, as well as good correlation between P-wave and S_H-wave velocities. P-wave and S_H-wave onsets at these points are generally clear, and later oscillations are well damped.

Above 110 feet, the seismic records are filled with ambient noise from fluid flow in the boring that overwhelms the signals produced by the probe source. No P-wave signals can be extracted from these records, and the S_H-wave velocities from 74 - 93 feet are of questionable quality. These data should not be used for further calculations without confirmation.

Quality Assurance

These boring geophysical measurements were performed using industry-standard or better methods for measurements and analyses. All work was performed under **GEO***Vision* quality assurance procedures, which include:

- Use of NIST-traceable calibrations, where applicable, for field and laboratory instrumentation;
- Use of standard field data logs;
- Log records were collected going down the boring as well as coming up for QA/QC purposes and compared for consistency of image and depth of structures when possible.
- Use of independent verification of orientation and plunge by comparison of measured values to as built information and reference structures, such as casing shoe or water surface.
- Independent review of calculations and results by a registered professional engineer, geologist, or geophysicist.

Table 1. Boring locations and logging dates

BORING DESIGNATION	DATES LOGGED	COORDINATES (DEGREES) [1]		ELEVATION [1] (FEET)
		LATITUDE	LONGITUDE	
1	5/10/2013			

[1] Survey coordinates not available

Table 2. Logging dates and depth ranges

BORING NUMBER	TOOL AND RUN NUMBER	DEPTH BELOW MUDLINE (FEET)	OPEN HOLE (FEET)	SAMPLE INTERVAL (FEET)	DATE LOGGED
1	SUSPENSION 01	73.8 – 114.8	128.5	1.6	5/10/2013

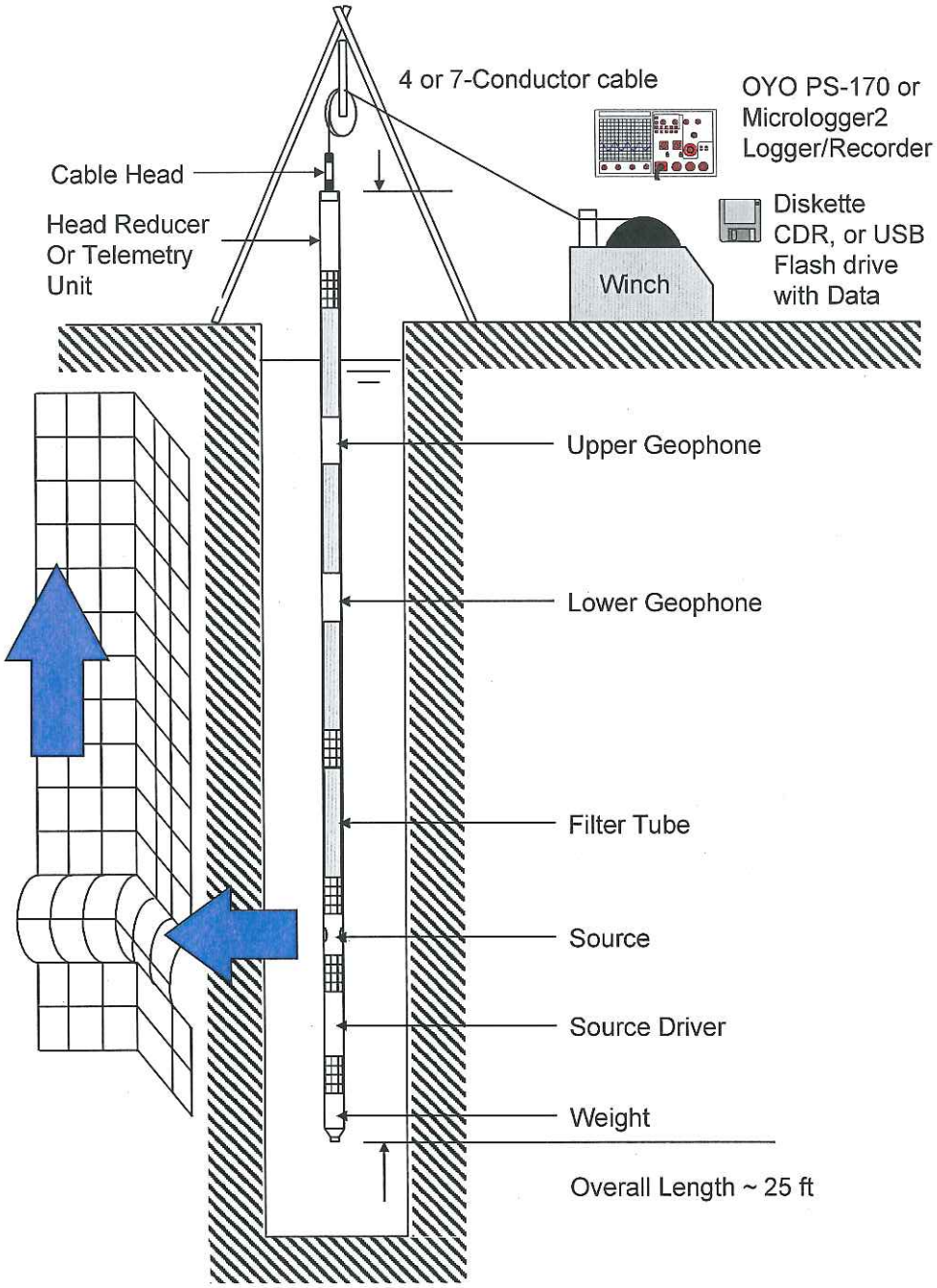

Figure 1: Concept illustration of P-S logging system

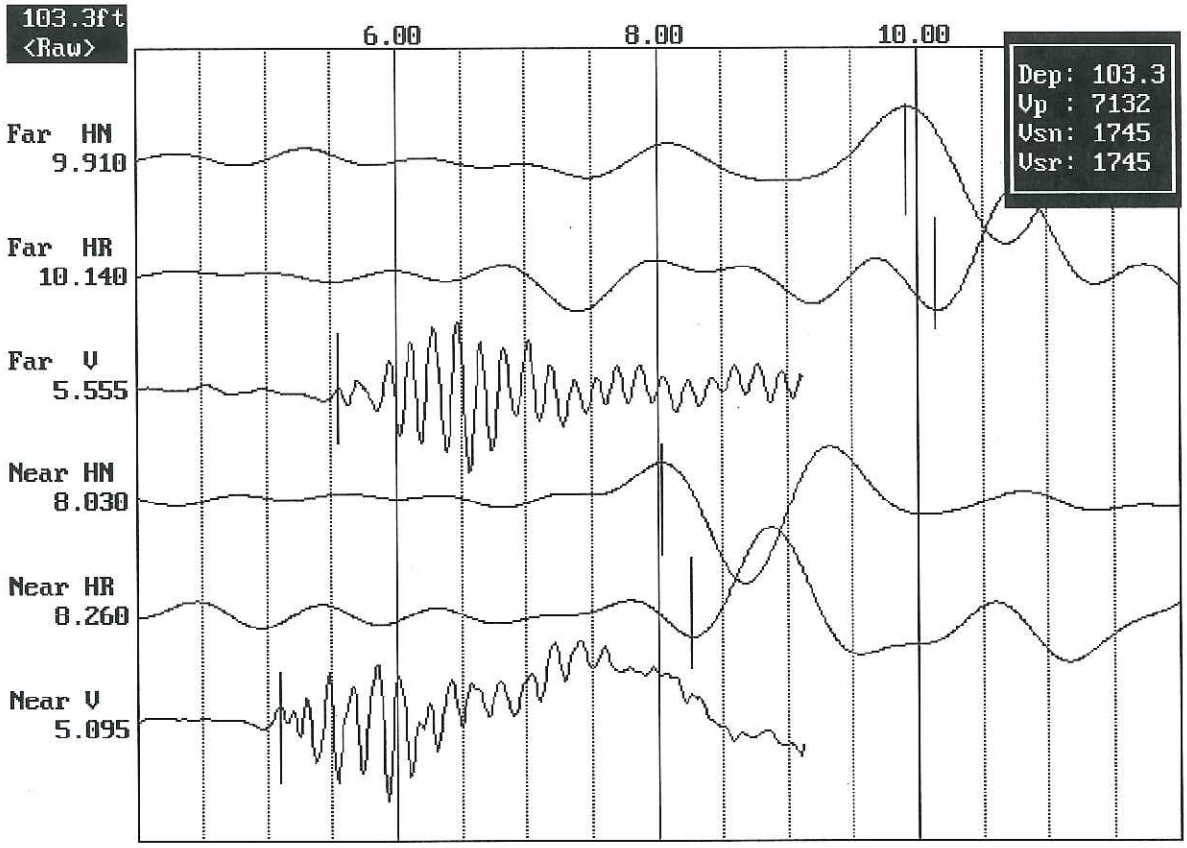

Figure 2: Example of filtered (1400 Hz lowpass) record

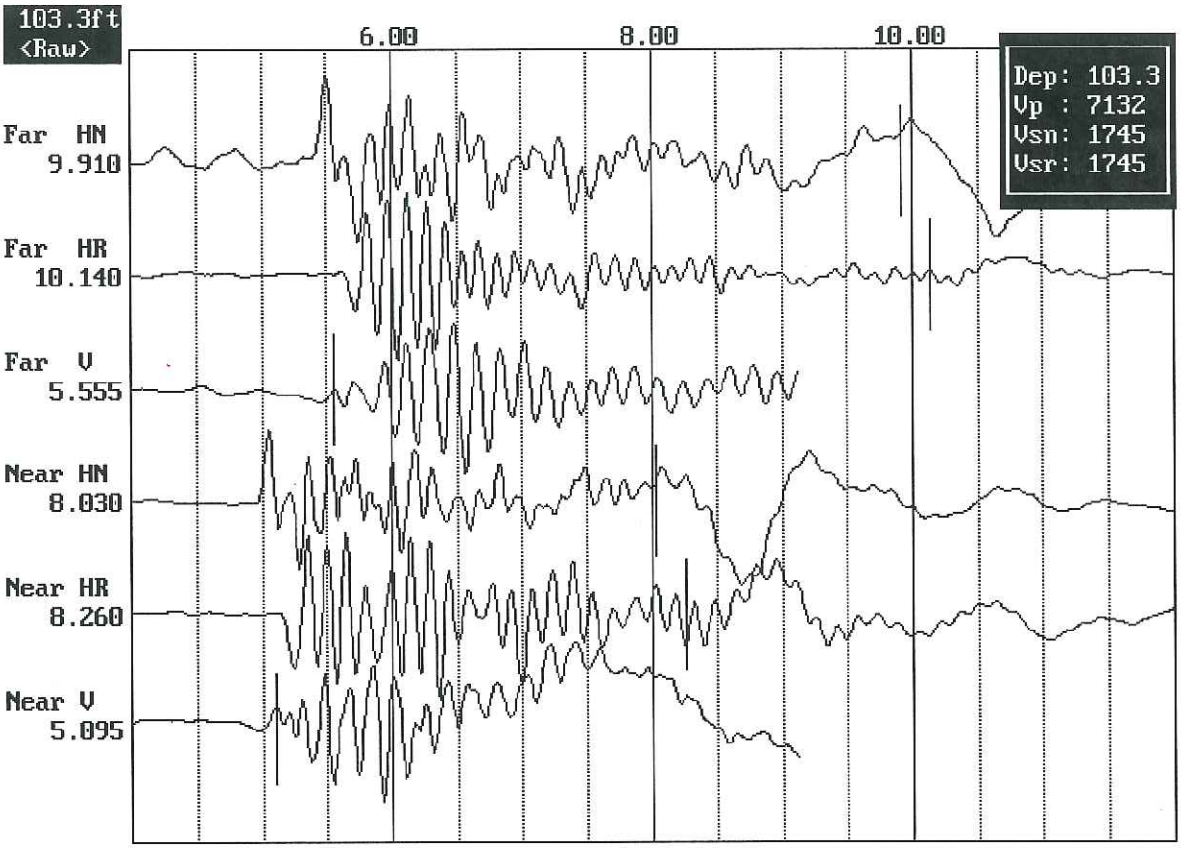

Figure 3: Example of unfiltered record

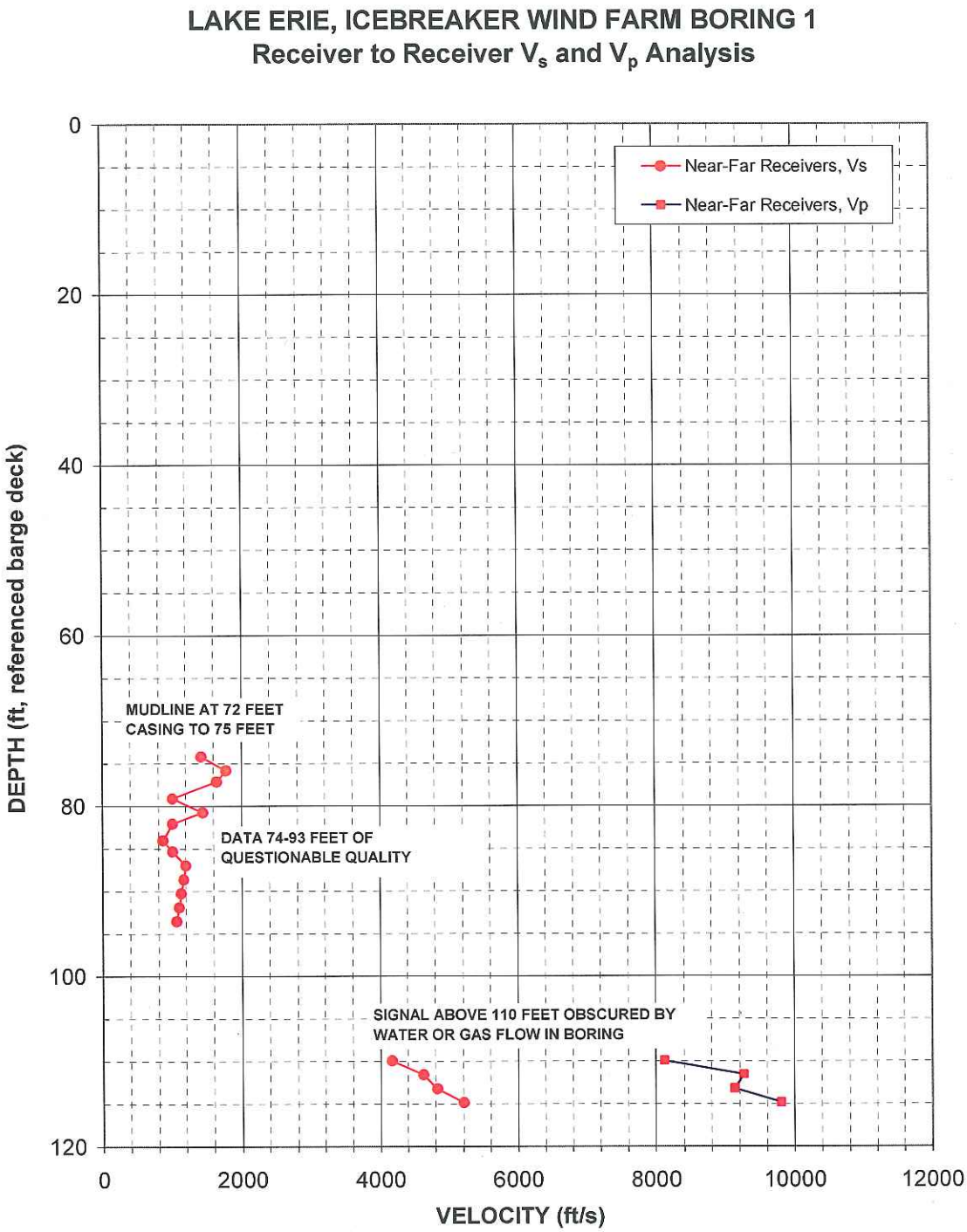

Figure 4: Boring 1, Suspension R1-R2 P- and S_H-wave velocities

Table 3. Boring 1, Suspension R1-R2 depths and P- and S_H-wave velocities

Summary of Compressional Wave Velocity, Shear Wave Velocity, and Poisson's Ratio Based on Receiver-to-Receiver Travel Time Data - Borehole Boring 1

American Units				Metric Units			
Depth at Midpoint Between Receivers	Velocity		Poisson's Ratio	Depth at Midpoint Between Receivers	Velocity		Poisson's Ratio
	V_s	V_p			V_s	V_p	
(ft)	(ft/s)	(ft/s)		(m)	(m/s)	(m/s)	
74.2	1430	-	-	22.6	440	-	-
75.8	1780	-	-	23.1	540	-	-
77.1	1650	-	-	23.5	500	-	-
79.1	1010	-	-	24.1	310	-	-
80.7	1450	-	-	24.6	440	-	-
82.0	1010	-	-	25.0	310	-	-
84.0	870	-	-	25.6	260	-	-
85.3	1010	-	-	26.0	310	-	-
86.9	1200	-	-	26.5	370	-	-
88.6	1170	-	-	27.0	360	-	-
90.2	1130	-	-	27.5	340	-	-
91.9	1100	-	-	28.0	340	-	-
93.5	1060	-	-	28.5	320	-	-
95.1	-	-	-	29.0	-	-	-
96.8	-	-	-	29.5	-	-	-
98.4	-	-	-	30.0	-	-	-
100.1	-	-	-	30.5	-	-	-
101.7	-	-	-	31.0	-	-	-
103.4	-	-	-	31.5	-	-	-
105.0	-	-	-	32.0	-	-	-
106.6	-	-	-	32.5	-	-	-
108.3	-	-	-	33.0	-	-	-
109.9	4170	8130	0.32	33.5	1270	2480	0.32
111.6	4630	9260	0.33	34.0	1410	2820	0.33
113.2	4830	9130	0.31	34.5	1470	2780	0.31
114.8	5210	9800	0.30	35.0	1590	2990	0.30

Notes: "-" means no data available at that particular interval of depth.

APPENDIX A

SUSPENSION VELOCITY MEASUREMENT QUALITY ASSURANCE SUSPENSION SOURCE TO RECEIVER ANALYSIS RESULTS

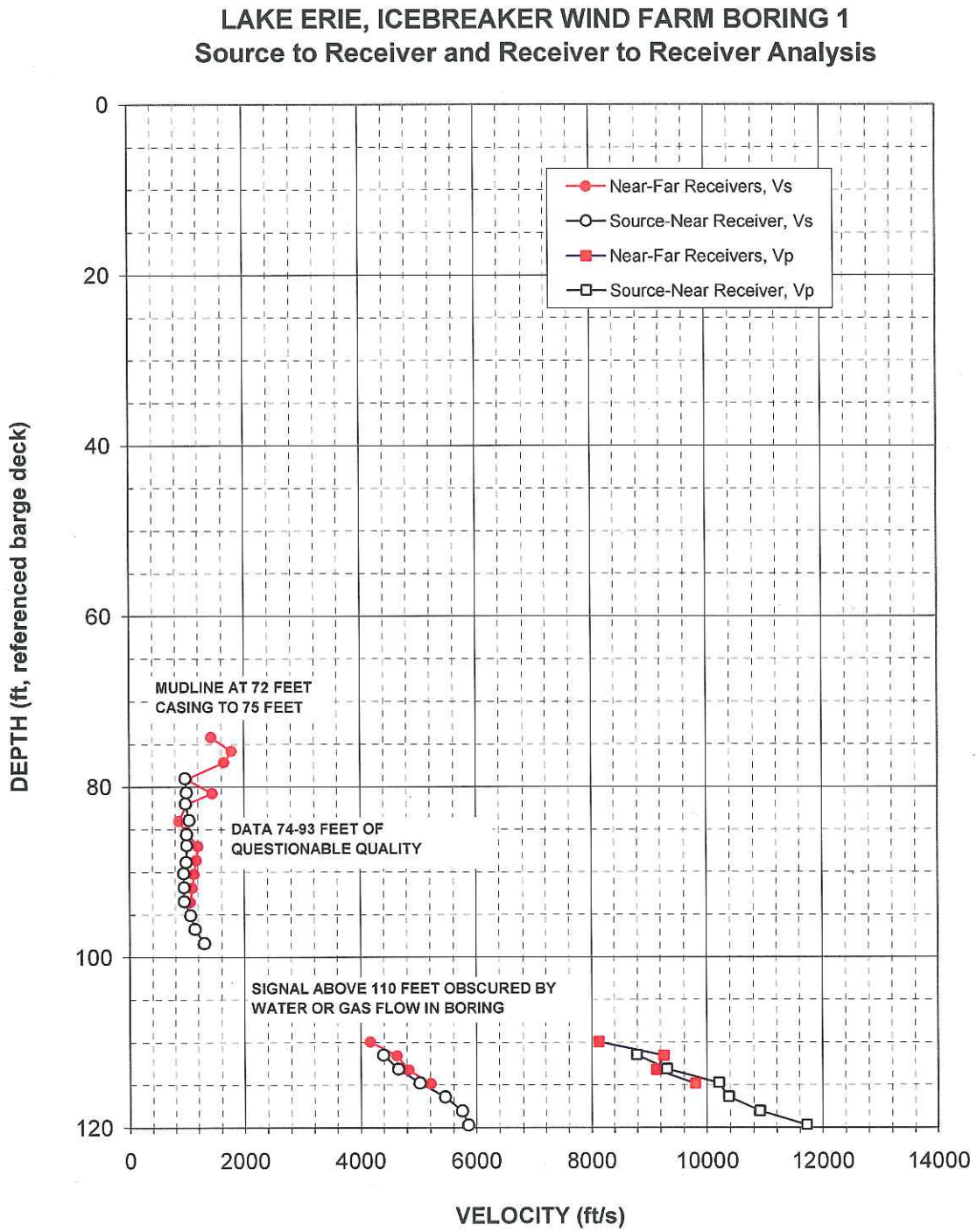

Figure A-1. Boring 1, S - R1 quality assurance analysis P- and S_H-wave data

Table A-1. Boring1, S - R1 quality assurance analysis P- and S_H-wave data

Summary of Compressional Wave Velocity, Shear Wave Velocity, and Poisson's Ratio Based on Source-to-Receiver Travel Time Data - Borehole Boring 1

American Units				Metric Units			
Depth at Midpoint Between Source and Near Receiver	Velocity		Poisson's Ratio	Depth at Midpoint Between Source and Near Receiver	Velocity		Poisson's Ratio
	V_s	V_p			V_s	V_p	
(ft)	(ft/s)	(ft/s)		(m)	(m/s)	(m/s)	
79.0	980	-	-	24.1	300	-	-
80.6	1000	-	-	24.6	310	-	-
81.9	990	-	-	25.0	300	-	-
83.9	1050	-	-	25.6	320	-	-
85.5	1000	-	-	26.1	310	-	-
86.9	1000	-	-	26.5	310	-	-
88.8	1000	-	-	27.1	300	-	-
90.1	950	-	-	27.5	290	-	-
91.8	960	-	-	28.0	290	-	-
93.4	960	-	-	28.5	290	-	-
95.1	1070	-	-	29.0	330	-	-
96.7	1140	-	-	29.5	350	-	-
98.3	1300	-	-	30.0	400	-	-
100.0	-	-	-	30.5	-	-	-
101.6	-	-	-	31.0	-	-	-
103.3	-	-	-	31.5	-	-	-
104.9	-	-	-	32.0	-	-	-
106.5	-	-	-	32.5	-	-	-
108.2	-	-	-	33.0	-	-	-
109.8	-	-	-	33.5	-	-	-
111.5	4400	8790	0.33	34.0	1340	2680	0.33
113.1	4650	9310	0.33	34.5	1420	2840	0.33
114.7	5020	10210	0.34	35.0	1530	3110	0.34
116.4	5460	10380	0.31	35.5	1660	3160	0.31
118.0	5750	10910	0.31	36.0	1750	3330	0.31
119.7	5860	11720	0.33	36.5	1790	3570	0.33

Notes: "-" means no data available at that particular interval of depth.

APPENDIX B

BORING GEOPHYSICAL LOGGING SYSTEMS - NIST TRACEABLE CALIBRATION RECORDS

MICRO PRECISION CALIBRATION, INC.
12686 HOOVER STREET
GARDEN GROVE CA 92841
(714) 901-5659

ACCREDITED
Calibration CERT # 935.11

Certificate of Calibration

Date: Aug 8, 2012 **Cert No. 2008120143728**

Customer:
GEOVISION
1124 OLYMPIC DRIVE
CORONA CA 92881

Work Order #:	LA-9000255
Purchase Order #:	OH-120723-01
MPC Control #:	AM6768
Asset ID:	160024
Gage Type:	LOGGER
Manufacturer:	OYO
Model Number:	3403
Size:	N/A
Temp/RH:	0°F / 0.0 %
Serial Number:	160024
Department:	N/A
Performed By:	JIM WILLIAMS
Received Condition:	IN TOLERANCE
Returned Condition:	IN TOLERANCE
Cal. Date:	July 23, 2012
Cal. Interval:	12 MONTHS
Cal. Due Date:	July 23, 2013

Calibration Notes:
See attached data sheet for calculations.
Calibrated IAW customer supplied calibration data form 2.1

Standards Used to Calibrate Equipment

I.D.	Description.	Model	Serial	Manufacturer	Cal. Due Date	Traceability #
CC8501	GPS TIME & FREQUENCY RECEIVER	58503A	3710A08295	HEWLETT PACKARD	Jan 31, 2013	1269299
T1100	COUNTER	53131A	3546A09912	HEWLETT PACKARD	Jan 27, 2013	1674761
T1300	ARBITRAY WAVEFORM GENERATOR	33120A	US36010024	HEWLETT PACKARD	Aug 4, 2012	1458779

Calibrating Technician: JWilliams — JIM WILLIAMS

QC Approval: SK Boring — Steve Boring

The reported expanded uncertainty of measurement is stated as the standard uncertainty of measurement multiplied by the coverage factor k=2, which for normal distribution corresponds to a coverage probability of approximately 95%. The standard uncertainty of measurement has been determined in accordance with EA's Publication and NIST Technical Note 1297, 1994 Edition. Services rendered comply with ISO 17025:2005, ISO 9001:2008, ANSI/NCSL Z540-1, MPC Quality Manual, MPC CSD and with customer purchase order instructions.

Calibration cycles and resulting due dates were submitted/approved by the customer. Any number of factors may cause an instrument to drift out of tolerance before the next scheduled calibration. Recalibration cycles should be based on frequency of use, environmental conditions and customer's established systematic accuracy. The information on this report, pertains only to the instrument identified.

All standards are traceable to SI through the National Institute of Standards and Technology (NIST) and/or recognized national or international standards laboratories. Services rendered include proper manufacturer's service instruction and are warranted for no less than thirty (30) days. This report may not be reproduced in part or in a whole without the prior written approval of the issuing MPC lab.

Page 1 of 1 (CERT, Rev 3)

AM 6768

GEOVision geophysical services

SUSPENSION PS SEISMIC LOGGER/RECORDER CALIBRATION DATA FORM

INSTRUMENT DATA

System mfg.:	OYO	Model no.:	3403
Serial no.:	160024	Calibration date:	7/23/2012
By:	Jim Williams	Due date:	7/23/2013
Counter mfg.:	Hewlett Packard	Model no.:	53131A
Serial no.:	3546A09912	Calibration date:	1/27/2012
By:	Micro Precision Calibration	Due date:	1/27/2013
Signal generator mfg.:	Hewlett Packard	Model no.:	32120A
Serial no.:	US36010024	Calibration date:	8/4/2011
By:	Micro Precision Calibration	Due date:	8/4/2012
Laptop controller mfg.:	Panasonic	Model no.:	CF-29
Serial no.:	5KKSA84231	Calibration date:	N/A

SYSTEM SETTINGS:

Gain:	2
Filter	Analog:10kHz; Digital: Off
Range:	See sample period in table below
Delay:	0 ms
Stack (1 std)	1
System date = correct date and time	7/23/2012 13:22

PROCEDURE:

Set sine wave frequency to target frequency with amplitude of approximately 0.25 volt peak
Note actual frequency on data form.
Set sample period and record data file to disk. Note file name on data form.
Pick duration of 9 cycles using PSLOG.EXE program, note duration on data form, and save as .sps file. Calculate average frequency for each channel pair and note on data form.

Average frequency must be within +/- 1% of actual frequency at all data points.

Maximum error ((AVG-ACT)/ACT*100)% As found -0.10% As left -0.10%

Target Frequency (Hz)	Actual Frequency (Hz)	Sample Period (microS)	File Name	Time for 9 cycles Hn (msec)	Average Frequency Hn (Hz)	Time for 9 cycles Hr (msec)	Average Frequency Hr (Hz)	Time for 9 cycles V (msec)	Average Frequency V (Hz)
50.00	50.00	200	701	180.2	49.95	180.0	50.00	180.0	50.00
100.0	100.0	100	702	90.00	100.0	90.00	100.0	90.00	100.0
200.0	200.0	50	703	45.00	200.0	45.00	200.0	45.00	200.0
500.0	500.0	20	704	18.00	500.0	18.00	500.0	18.02	499.5
1000	1000	10	705	9.000	1000	9.000	1000	8.990	1001
2000	2000	5	706	4.500	2000	4.500	2000	4.500	2000

Calibrated by:	Jim Williams	7/23/2012	J Will
	Name	Date	Signature
Witnessed by:	Robert Steller	7/23/2012	
	Name	Date	Signature

Suspension PS Seismic Recorder/Logger Calibration Data Form Rev 2.1 February 7, 2012

APPENDIX E

LABORATORY TEST RESULTS

CONESTOGA-ROVERS & ASSOCIATES

MOISTURE CONTENT OF SOILS (ASTM D 2216)

CLIENT: Lake Erie Development Corporation / LEEDCO Icebreaker Project - Cleveland, Ohio, U.S.A.

PROJECT No.: 82317 SAMPLE No.: WLA 280

APPARATUS USED FOR TESTING

Oven No.: 1 & 2 Scale No.: 1

Time Samples Placed in Oven: 8:30 AM Time Removed from Oven: 9:00 AM

SAMPLE No. WLA 280	SR-1 1' - 5'	SR-1 5' - 6.5'	SR-1 6.5' - 8.7'	SR-3 16' -19.8'	ST-1 21' - 23'	ST-3 33' - 35'	ST-5 43' - 45'	ST-7 53' - 55'
CONTAINER No.	30	35	H2	31	ST1	ST3	ST5	ST7
MASS OF CONTAINER + WET SOIL (g)	734.0	839.0	1469.4	1739.8	800.7	1172.7	1385.6	1735.0
MASS OF CONTAINER + DRY SOIL (g)	607.1	725.4	1246.8	1571.2	656.1	985.0	1138.0	1525.3
MASS OF CONTAINER (g)	88.2	101.4	100.5	93.4	216.0	327.9	365.4	435.8
MASS OF DRY SOIL (g)	518.9	624.0	1146.3	1477.8	440.1	657.1	772.6	1089.5
MASS OF WATER (g)	126.9	113.6	222.6	168.6	144.6	187.7	247.6	209.7
MOISTURE CONTENT (%)	**24.5**	**18.2**	**19.4**	**11.4**	**32.9**	**28.6**	**32.0**	**19.2**

REMARKS:

SAMPLE No. WLA 280	SR-4 68' - 78'							
CONTAINER No.	36							
MASS OF CONTAINER + WET SOIL (g)	1791.4							
MASS OF CONTAINER + DRY SOIL (g)	1546.6							
MASS OF CONTAINER (g)	106.9							
MASS OF DRY SOIL (g)	1439.7							
MASS OF WATER (g)	244.8							
MOISTURE CONTENT (%)	**17.0**							

REMARKS:

PERFORMED BY: H. Arthur / B. Brown DATE: May 21 & 22, 2013

REVIEWED BY : Abdul Hafeez Khan, P.Eng. DATE: May 27, 2013

CONESTOGA-ROVERS & ASSOCIATES

LIQUID LIMIT, PLASTIC LIMIT AND PLASTICITY INDEX OF SOILS

(ASTM D4318-98)

CLIENT:	Lake Erie Development Corporation	**LAB No.:**	**WLA 280-2**
PROJECT/SITE:	LEEDCo Project Icebreaker - Cleveland, Ohio, USA	**PROJECT No.:**	82317

Borehole No.:	Boring BH-1	Sample No.:	SR-1	Depth:	5.0' - 6.5'
Soil Description:	Sand, trace silt - Non Plastic			Date Sampled:	May 5 - 10, 2013

Appratus:		Balance No.:	-	Porcelain Bowl No.:	88
Liquid Limit Device No.:	-	Oven No.:	-	Spatula No.:	1
Sieve No.:	40	Glass Plate No.:	1		

LIQUID LIMIT (LL):

	Test No. 1	Test No. 2	Test No. 3
Number of Blows			
WATER CONTENT:			
Tare No.			
Wet Soil+Tare, g			
Dry Soil+Tare, g			
Mass of Water, g			
Tare, g			
Mass of Soil, g			
Water Content %			

PLASTIC LIMIT (PL) - WATER CONTENT:

Tare No.		
Wet Soil+Tare, g		
Dry Soil+Tare, g		
Mass of Water, g		
Tare, g		
Mass of Soil, g		
Water Content %		
Average Water Content %		

NATURAL WATER CONTENT (W^n):

Tare No.	35	
Wet Soil+Tare, g	839.00	
Dry Soil+Tare, g	725.40	
Mass of Water, g	113.60	
Tare, g	101.40	
Mass of Soil, g	624.00	
Water Content %	18.2%	

SOIL PREPARATION:

- ☐ Cohesive <400 µm
- ☐ Cohesive >400 µm
- ☑ Non-Cohesive
- ☑ Dry Preparation
- ☐ Wet Preparation

RESULTS

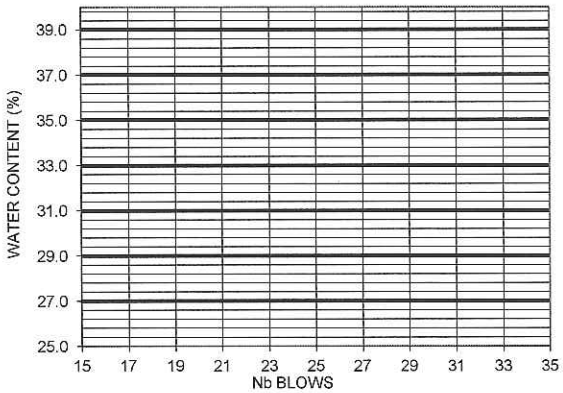

SOIL PLASTICITY CHART

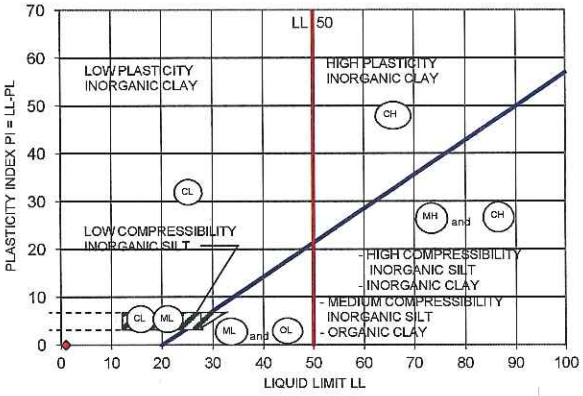

Liquid Limit (LL)	Plastic Limit (PL)	Plasticity Index (PI)	Natural Water Content W^n
-	-	-	18

REMARKS: Non - Plastic

PERFORMED BY:	H. Arthur	**DATE:**	May 22, 2013
VERIFIED BY:	Abdul Hafeez Khan, P.Eng.	**DATE:**	May 27, 2013

CONESTOGA-ROVERS & ASSOCIATES

LIQUID LIMIT, PLASTIC LIMIT AND PLASTICITY INDEX OF SOILS

(ASTM D4318-98)

CLIENT:	Lake Erie Development Corporation	**LAB No.:**	**WLA 280-3**
PROJECT/SITE:	LEEDCo Project Icebreaker - Cleveland, Ohio, USA	**PROJECT No.:**	82317

Borehole No.:	Boring BH-1	Sample No.:	SR-1	Depth:	6.5' - 8.7'
Soil Description:	silty Sand, trace clay, trace gravel - Non Plastic			Date Sampled:	May 5 - 10, 2013

Appratus:		Balance No.:	-	Porcelain Bowl No.:	69
Liquid Limit Device No.:	-	Oven No.:	-	Spatula No.:	1
Sieve No.:	40	Glass Plate No.:	1		

LIQUID LIMIT (LL):

	Test No. 1	Test No. 2	Test No. 3
Number of Blows			
WATER CONTENT:			
Tare No.			
Wet Soil+Tare, g			
Dry Soil+Tare, g			
Mass of Water, g			
Tare, g			
Mass of Soil, g			
Water Content %			

PLASTIC LIMIT (PL) - WATER CONTENT:

Tare No.		
Wet Soil+Tare, g		
Dry Soil+Tare, g		
Mass of Water, g		
Tare, g		
Mass of Soil, g		
Water Content %		
Average Water Content %		

NATURAL WATER CONTENT (W^n):

Tare No.	H2	
Wet Soil+Tare, g	1469.40	
Dry Soil+Tare, g	1246.80	
Mass of Water, g	222.60	
Tare, g	100.50	
Mass of Soil, g	1146.30	
Water Content %	19.4%	

SOIL PREPARATION:

- ☐ Cohesive <400 µm
- ☐ Cohesive >400 µm
- ☑ Non-Cohesive
- ☑ Dry Preparation
- ☐ Wet Preparation

RESULTS

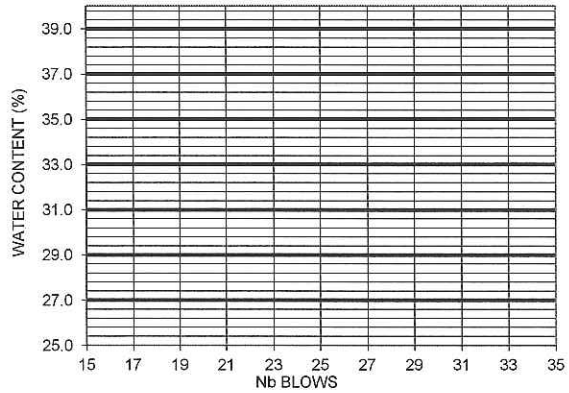

SOIL PLASTICITY CHART

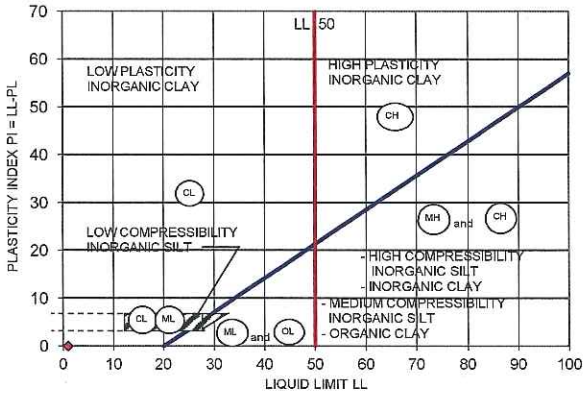

Liquid Limit (LL)	Plastic Limit (PL)	Plasticity Index (PI)	Natural Water Content W^n
-	-	-	19

REMARKS: Non - Plastic

PERFORMED BY:	H. Arthur	**DATE:**	May 22, 2013
VERIFIED BY:	Abdul Hafeez Khan, P.Eng.	**DATE:**	May 27, 2013

CONESTOGA-ROVERS & ASSOCIATES

LIQUID LIMIT, PLASTIC LIMIT AND PLASTICITY INDEX OF SOILS

(ASTM D4318-98)

CLIENT:	Lake Erie Development Corporation	LAB No.:	WLA 280-10
PROJECT/SITE:	LEEDCo Project Icebreaker - Cleveland, Ohio, USA	PROJECT No.:	82317

Borehole No.:	Boring BH-1	Sample No.:	ST-1	Depth:	21 ft - 23 ft
Soil Description:	CH - Fat Clay (silty Clay, trace sand)			Date Sampled:	May 5 - 10, 2013

Appratus:		Balance No.:	4	Porcelain Bowl No.:	6
Liquid Limit Device No.:	1	Oven No.:	1	Spatula No.:	2
Sieve No.:	40	Glass Plate No.:	1		

LIQUID LIMIT (LL):

	Test No. 1	Test No. 2	Test No. 3
Number of Blows	36	24	12
WATER CONTENT:			
Tare No.	2	11	7
Wet Soil+Tare, g	29.88	30.03	27.12
Dry Soil+Tare, g	27.81	28.41	25.28
Mass of Water, g	2.07	1.62	1.84
Tare, g	23.84	25.51	22.25
Mass of Soil, g	3.97	2.90	3.03
Water Content %	52.1%	55.9%	60.7%

PLASTIC LIMIT (PL) - WATER CONTENT:

Tare No.	9	14
Wet Soil+Tare, g	34.13	33.23
Dry Soil+Tare, g	32.81	31.65
Mass of Water, g	1.32	1.58
Tare, g	27.44	25.22
Mass of Soil, g	5.37	6.43
Water Content %	24.6%	24.6%
Average Water Content %	24.6%	

NATURAL WATER CONTENT (W^n):

Tare No.	ST1	
Wet Soil+Tare, g	800.70	
Dry Soil+Tare, g	656.10	
Mass of Water, g	144.60	
Tare, g	216.00	
Mass of Soil, g	440.10	
Water Content %	32.9%	

SOIL PREPARATION:

- [x] Cohesive <400 µm
- [ ] Cohesive >400 µm
- [ ] Non-Cohesive
- [x] Dry Preparation
- [ ] Wet Preparation

RESULTS

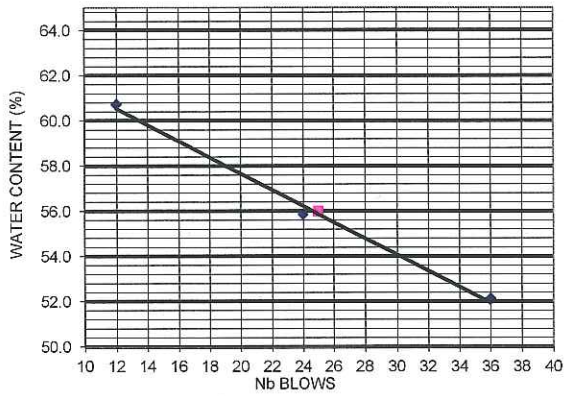

SOIL PLASTICITY CHART

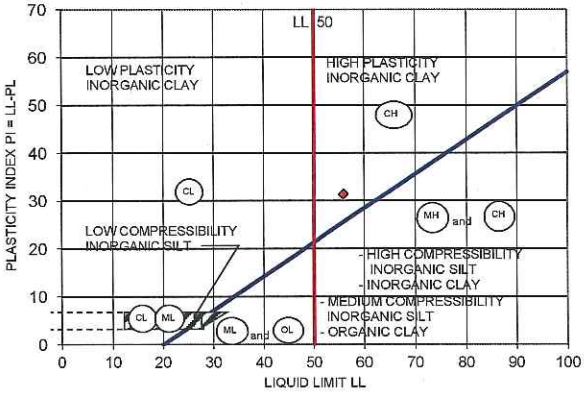

Liquid Limit (LL)	Plastic Limit (PL)	Plasticity Index (PI)	Natural Water Content W^n
56	25	31	33

REMARKS:

PERFORMED BY:	H. Arthur	DATE:	May 24, 2013
VERIFIED BY:	Abdul Hafeez Khan, P.Eng.	DATE:	May 31, 2013

CONESTOGA-ROVERS & ASSOCIATES

LIQUID LIMIT, PLASTIC LIMIT AND PLASTICITY INDEX OF SOILS
(ASTM D4318-98)

CLIENT:	Lake Erie Development Corporation	**LAB No.:**	**WLA 280-14**
PROJECT/SITE:	LEEDCo Project Icebreaker - Cleveland, Ohio, USA	**PROJECT No.:**	82317

Borehole No.:	Boring BH-1	Sample No.:	ST-5	Depth:	43 ft - 45 ft
Soil Description:	CL - Lean Clay (Silt and Clay, trace sand)			Date Sampled:	May 5 - May 10, 2013

Appratus:		Balance No.:	4	Porcelain Bowl No.:	13
Liquid Limit Device No.:	1	Oven No.:	1	Spatula No.:	2
Sieve No.:	40	Glass Plate No.:	1		

LIQUID LIMIT (LL):

	Test No. 1	Test No. 2	Test No. 3
Number of Blows	30	20	9
WATER CONTENT:			
Tare No.	9	11	2
Wet Soil+Tare, g	36.41	31.31	36.35
Dry Soil+Tare, g	34.49	30.01	33.24
Mass of Water, g	1.92	1.30	3.11
Tare, g	27.45	25.50	23.84
Mass of Soil, g	7.04	4.51	9.40
Water Content %	27.3%	28.8%	33.1%

PLASTIC LIMIT (PL) - WATER CONTENT:

Tare No.	17	23
Wet Soil+Tare, g	32.11	31.46
Dry Soil+Tare, g	31.03	30.55
Mass of Water, g	1.08	0.91
Tare, g	24.38	24.92
Mass of Soil, g	6.65	5.63
Water Content %	16.2%	16.2%
Average Water Content %	16.2%	

NATURAL WATER CONTENT (W^n):

Tare No.	ST5	
Wet Soil+Tare, g	1385.60	
Dry Soil+Tare, g	1138.00	
Mass of Water, g	247.60	
Tare, g	365.40	
Mass of Soil, g	772.60	
Water Content %	32.0%	

SOIL PREPARATION:

- [x] Cohesive <400 µm
- [ ] Cohesive >400 µm
- [ ] Non-Cohesive
- [x] Dry Preparation
- [ ] Wet Preparation

RESULTS

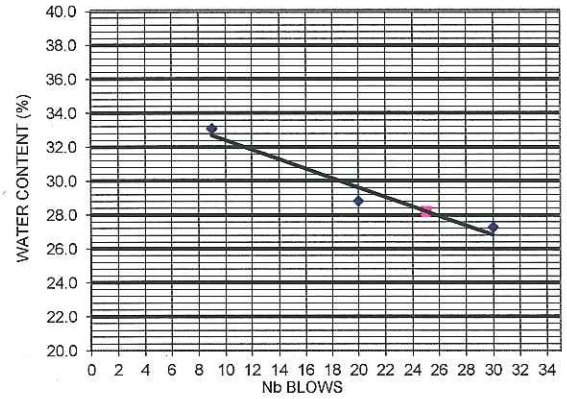

SOIL PLASTICITY CHART

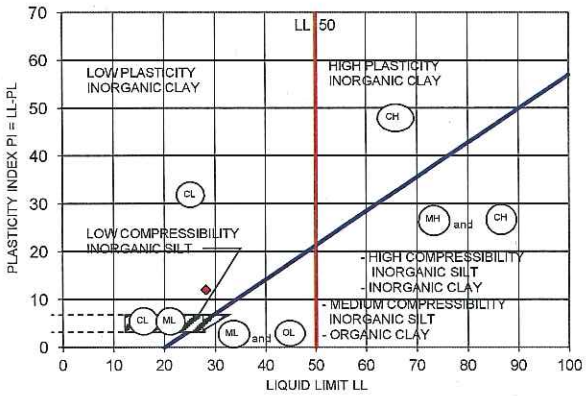

Liquid Limit (LL)	Plastic Limit (PL)	Plasticity Index (PI)	Natural Water Content W^n
28	16	12	32

REMARKS:

PERFORMED BY:	H. Arthur	**DATE:**	May 23, 2013
VERIFIED BY:	Abdul Hafeez Khan, P.Eng.	**DATE:**	May 27, 2013

CONESTOGA-ROVERS & ASSOCIATES

LIQUID LIMIT, PLASTIC LIMIT AND PLASTICITY INDEX OF SOILS
(ASTM D4318-98)

CLIENT:	Lake Erie Development Corporation	**LAB No.:**	**WLA 280-16**
PROJECT/SITE:	LEEDCo Project Icebreaker - Cleveland, Ohio, USA	**PROJECT No.:**	82317

Borehole No.:	Boring BH-1	Sample No.:	ST-7	Depth:	53 ft - 55 ft
Soil Description:	CL - Lean Clay (clayey sandy Silt, trace gravel)			Date Sampled:	May 5 - May 10, 2013

Appratus:		Balance No.:	4	Porcelain Bowl No.:	71
Liquid Limit Device No.:	1	Oven No.:	1	Spatula No.:	1
Sieve No.:	40	Glass Plate No.:	1		

LIQUID LIMIT (LL):

	Test No. 1	Test No. 2	Test No. 3
Number of Blows	31	21	15
WATER CONTENT:			
Tare No.	14	7	25
Wet Soil+Tare, g	30.72	29.80	34.38
Dry Soil+Tare, g	29.17	27.54	31.92
Mass of Water, g	1.55	2.26	2.46
Tare, g	25.23	22.26	26.47
Mass of Soil, g	3.94	5.28	5.45
Water Content %	39.3%	42.8%	45.1%

PLASTIC LIMIT (PL) - WATER CONTENT:

Tare No.	16	12
Wet Soil+Tare, g	31.48	31.26
Dry Soil+Tare, g	30.21	29.87
Mass of Water, g	1.27	1.39
Tare, g	24.40	23.60
Mass of Soil, g	5.81	6.27
Water Content %	21.9%	22.2%
Average Water Content %	22.0%	

NATURAL WATER CONTENT (W^n):

Tare No.	ST7	
Wet Soil+Tare, g	1735.00	
Dry Soil+Tare, g	1525.30	
Mass of Water, g	209.70	
Tare, g	435.80	
Mass of Soil, g	1089.50	
Water Content %	19.2%	

SOIL PREPARATION:

- [x] Cohesive <400 µm
- [ ] Cohesive >400 µm
- [ ] Non-Cohesive
- [x] Dry Preparation
- [ ] Wet Preparation

RESULTS

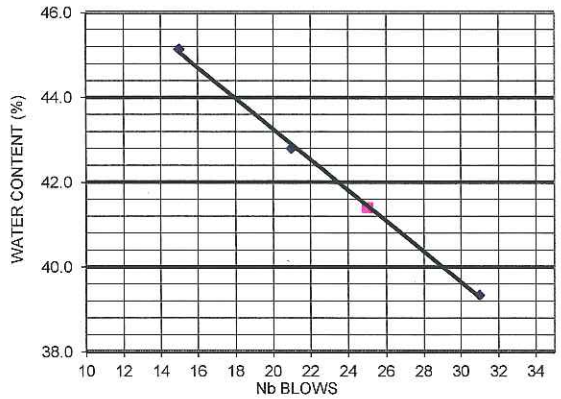

SOIL PLASTICITY CHART

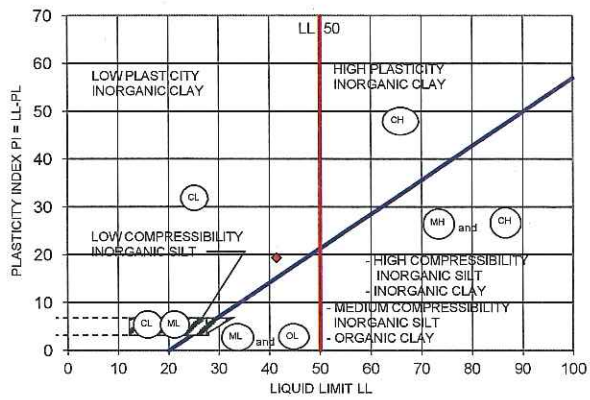

Liquid Limit (LL)	Plastic Limit (PL)	Plasticity Index (PI)	Natural Water Content W^n
41	22	19	19

REMARKS:

PERFORMED BY:	H. Arthur	**DATE:**	May 21, 2013
VERIFIED BY:	Abdul Hafeez Khan, P.Eng.	**DATE:**	May 27, 2013

CONESTOGA-ROVERS & ASSOCIATES

LIQUID LIMIT, PLASTIC LIMIT AND PLASTICITY INDEX OF SOILS

(ASTM D4318-98)

CLIENT:	Lake Erie Development Corporation	LAB No.:	WLA 280-18
PROJECT/SITE:	LEEDCo Project Icebreaker - Cleveland, Ohio, USA	PROJECT No.:	82317

Borehole No.:	Boring BH-1	Sample No.:	SR-4	Depth:	68 ft - 78 ft
Soil Description:	CL - Lean Clay (sandy clayey Silt, trace gravel)			Date Sampled:	May 5 - 10, 2013

Appratus:		Balance No.:	4	Porcelain Bowl No.:	1
Liquid Limit Device No.:	1	Oven No.:	1	Spatula No.:	1
Sieve No.:	40	Glass Plate No.:	1		

LIQUID LIMIT (LL):

	Test No. 1	Test No. 2	Test No. 3
Number of Blows	34	23	9
WATER CONTENT:			
Tare No.	16	12	23
Wet Soil+Tare, g	30.28	29.62	33.39
Dry Soil+Tare, g	28.99	28.23	31.20
Mass of Water, g	1.29	1.39	2.19
Tare, g	24.41	23.61	24.93
Mass of Soil, g	4.58	4.62	6.27
Water Content %	28.2%	30.1%	34.9%

PLASTIC LIMIT (PL) - WATER CONTENT:		
Tare No.	25	17
Wet Soil+Tare, g	34.37	30.99
Dry Soil+Tare, g	33.24	30.09
Mass of Water, g	1.13	0.90
Tare, g	26.48	24.39
Mass of Soil, g	6.76	5.70
Water Content %	16.7%	15.8%
Average Water Content %	16.3%	

NATURAL WATER CONTENT (W^n):		
Tare No.	36	
Wet Soil+Tare, g	1791.40	
Dry Soil+Tare, g	1546.60	
Mass of Water, g	244.80	
Tare, g	106.90	
Mass of Soil, g	1439.70	
Water Content %	17.0%	

SOIL PREPARATION:

- [x] Cohesive <400 µm
- [ ] Cohesive >400 µm
- [ ] Non-Cohesive
- [x] Dry Preparation
- [ ] Wet Preparation

RESULTS

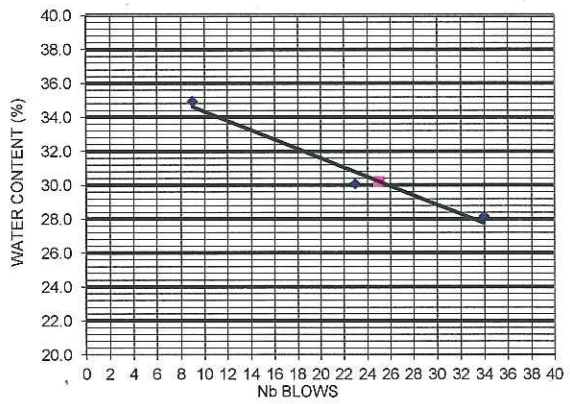

SOIL PLASTICITY CHART

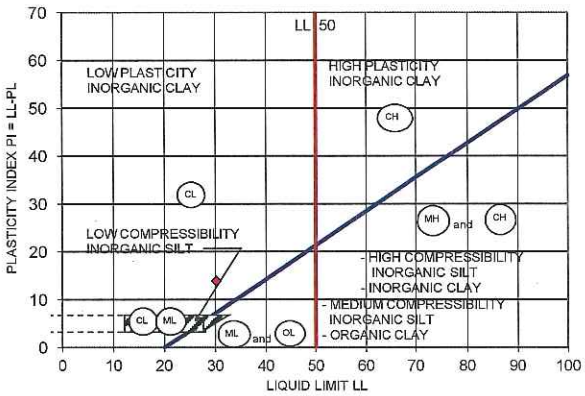

Liquid Limit (LL)	Plastic Limit (PL)	Plasticity Index (PI)	Natural Water Content W^n
30	16	14	17

REMARKS:

PERFORMED BY:	H. Arthur	DATE:	May 24, 2013
VERIFIED BY:	Abdul Hafeez Khan, P.Eng.	DATE:	May 31, 2013

CONESTOGA-ROVERS & ASSOCIATES

PARTICLE-SIZE ANALYSIS OF SOILS (USCS) (ASTM D422)

CLIENT:	Lake Erie Development Corporation	**LAB No.:**	WLA 280-1
PROJECT/ SITE:	LEEDCo Project Icebreaker - Cleveland, Ohio, USA	**PROJECT No.:**	82317

Borehole No.:	Boring BH-1	Sample No.:	SR-1
Depth:	1.0' - 5.0'	Enclosure:	-

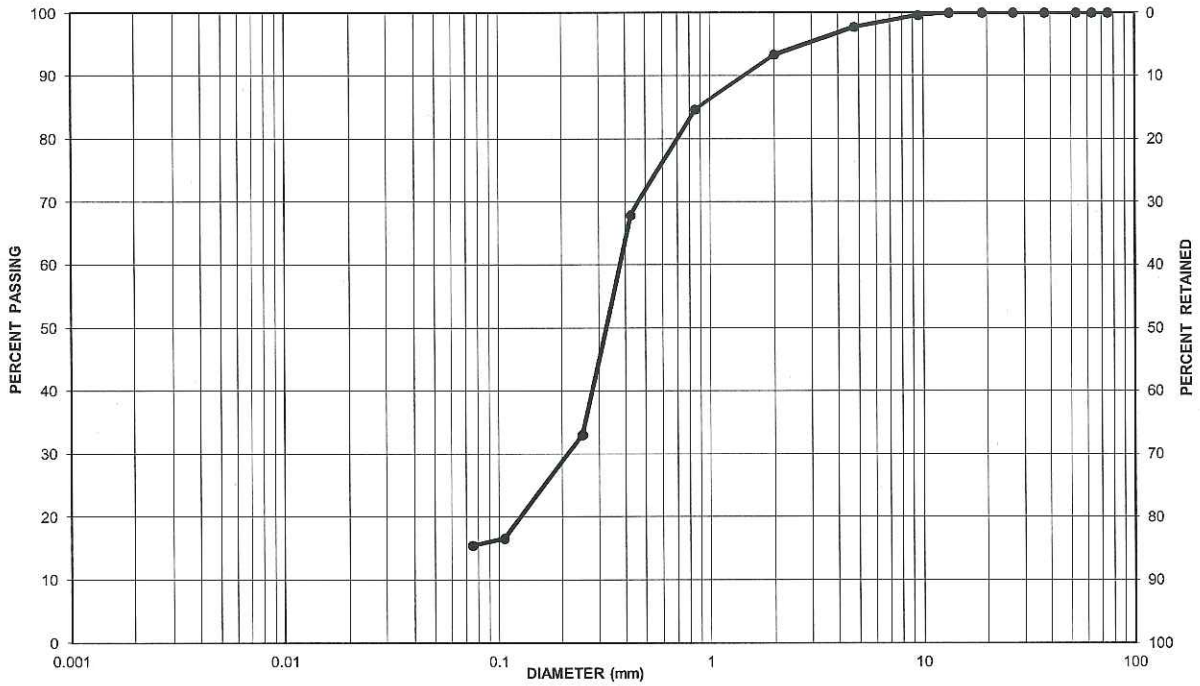

CLAY & SILT	SAND			GRAVEL	
	FINE	MEDIUM	COARSE	FINE	COARSE
UNIFIED SOIL CLASSIFICATION SYSTEM					

Soil Description	Gravel	Sand	Clay & Silt
Sand, some silt & clay, trace gravel	2	82	16

REMARKS:

PERFORMED BY:	H.Arthur	**DATE:**	May 23, 2013
VERIFIED BY:	Abdul Hafeez Khan, P.Eng.	**DATE:**	May 31, 2013

CONESTOGA-ROVERS & ASSOCIATES

PARTICLE-SIZE ANALYSIS OF SOILS (USCS) (ASTM D422)

CLIENT:	Lake Erie Development Corporation	**LAB No.:**	WLA 280-3
PROJECT/ SITE:	LEEDCo Project Icebreaker - Cleveland, Ohio, USA	**PROJECT No.:**	82317

Borehole No.:	Boring BH-1	Sample No.:	SR-1
Depth:	6.5' - 8.7'	Enclosure:	-

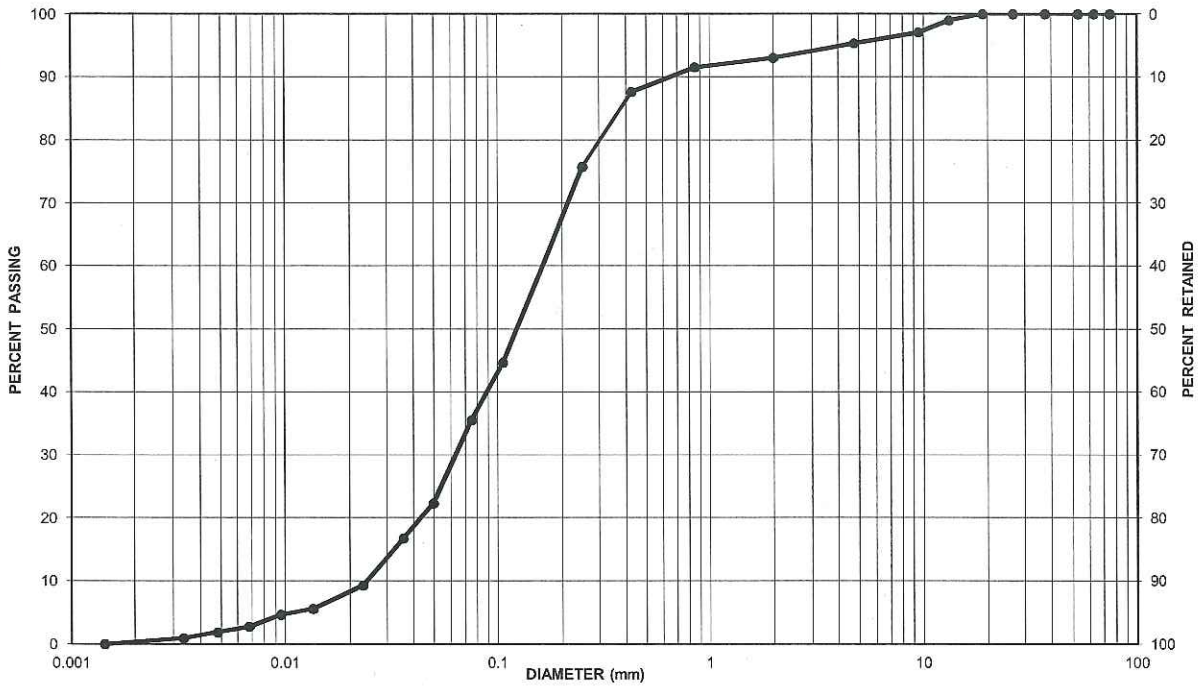

CLAY & SILT	SAND			GRAVEL	
	FINE	MEDIUM	COARSE	FINE	COARSE
UNIFIED SOIL CLASSIFICATION SYSTEM					

Soil Description	Gravel	Sand	Clay & Silt
silty Sand, trace clay, trace gravel	5	60	35

REMARKS:

PERFORMED BY:	B. Brown	**DATE:**	May 23, 2013
VERIFIED BY:	Abdul Hafeez Khan, P.Eng.	**DATE:**	May 31, 2013

CONESTOGA-ROVERS & ASSOCIATES

PARTICLE-SIZE ANALYSIS OF SOILS (USCS) (ASTM D422)

CLIENT:	Lake Erie Development Corporation	**LAB No.:**	WLA 280-6
PROJECT/ SITE:	LEEDCo Project Icebreaker - Cleveland, Ohio, USA	**PROJECT No.:**	82317

Borehole No.:	Boring BH-1	Sample No.:	SR-2
Depth:	13.2' - 14.8'	Enclosure:	-

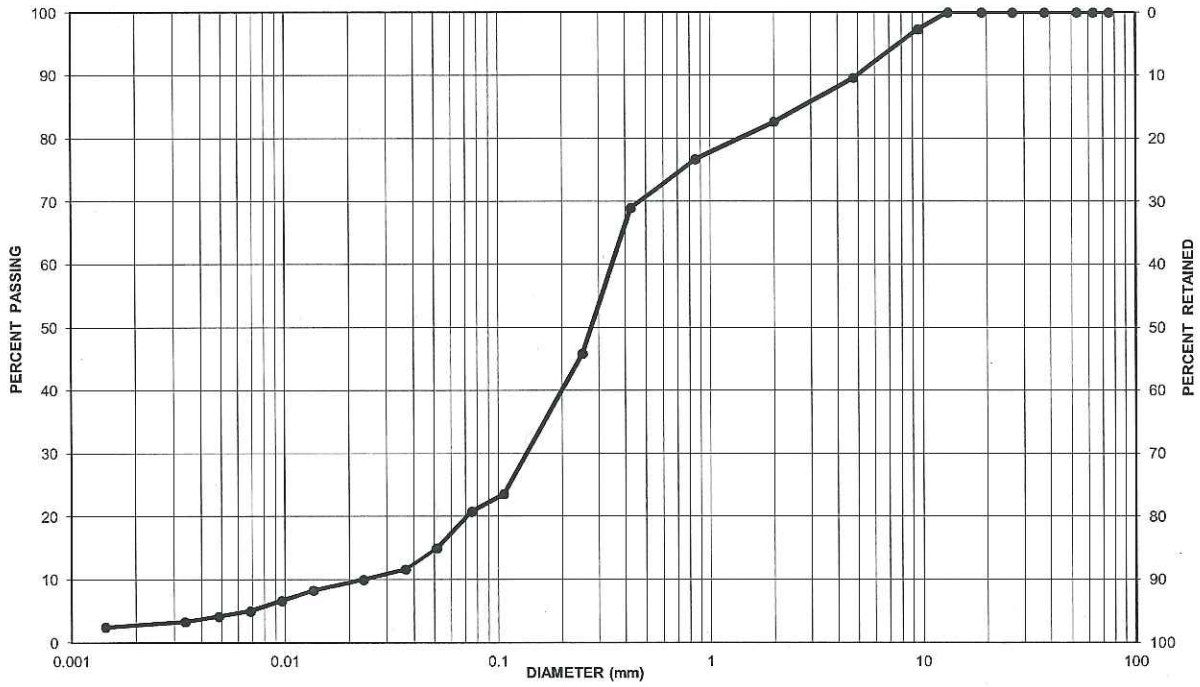

CLAY & SILT	SAND			GRAVEL	
	FINE	MEDIUM	COARSE	FINE	COARSE
UNIFIED SOIL CLASSIFICATION SYSTEM					

Soil Description	Gravel	Sand	Clay & Silt
Sand, some silt, trace clay, trace gravel	10	69	21

REMARKS:

PERFORMED BY:	B. Brown	**DATE:**	May 23, 2013
VERIFIED BY:	Abdul Hafeez Khan, P.Eng.	**DATE:**	May 31, 2013

CONESTOGA-ROVERS & ASSOCIATES

PARTICLE-SIZE ANALYSIS OF SOILS (USCS) (ASTM D422)

CLIENT:	Lake Erie Development Corporation	**LAB No.:**	WLA 280-8
PROJECT/ SITE:	LEEDCo Project Icebreaker - Cleveland, Ohio, USA	**PROJECT No.:**	82317

Borehole No.:	Boring BH-1	Sample No.:	SR-3
Depth:	16.0' - 19.8'	Enclosure:	-

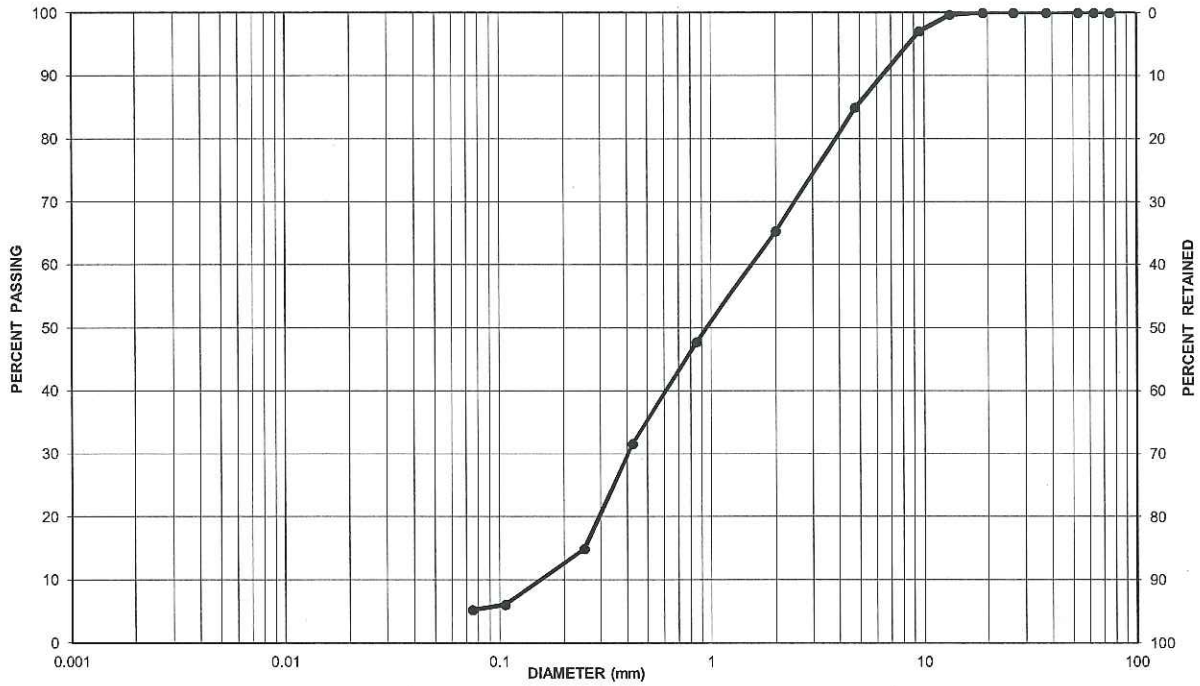

CLAY & SILT	SAND			GRAVEL	
	FINE	MEDIUM	COARSE	FINE	COARSE
UNIFIED SOIL CLASSIFICATION SYSTEM					

Soil Description	Gravel	Sand	Clay & Silt
Sand, trace silt, some gravel	15	80	5

REMARKS:

PERFORMED BY:	H. Arthur	**DATE:**	May 23, 2013
VERIFIED BY:	Abdul Hafeez Khan, P.Eng.	**DATE:**	May 31, 2013

CONESTOGA-ROVERS & ASSOCIATES

PARTICLE-SIZE ANALYSIS OF SOILS (USCS) (ASTM D422)

CLIENT:	Lake Erie Development Corporation	**LAB No.:**	WLA 280-10
PROJECT/ SITE:	LEEDCo Project Icebreaker - Cleveland, Ohio, USA	**PROJECT No.:**	82317

Borehole No.:	Boring BH-1	Sample No.:	ST-1
Depth:	21' - 23'	Enclosure:	-

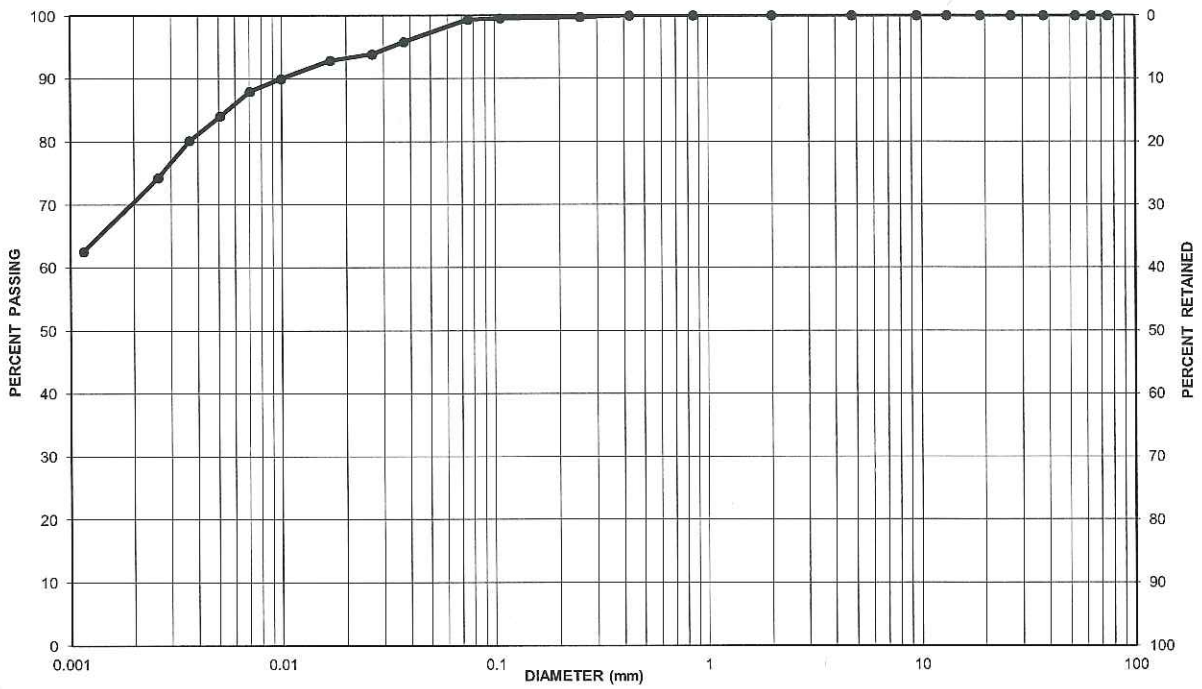

CLAY & SILT	SAND			GRAVEL	
	FINE	MEDIUM	COARSE	FINE	COARSE
UNIFIED SOIL CLASSIFICATION SYSTEM					

Soil Description	Gravel	Sand	Clay & Silt
silty Clay, trace sand	0	1	99

REMARKS:

PERFORMED BY:	B. Brown	**DATE:**	May 28, 2013
VERIFIED BY:	Abdul Hafeez Khan, P.Eng.	**DATE:**	May 31, 2013

CONESTOGA-ROVERS & ASSOCIATES

PARTICLE-SIZE ANALYSIS OF SOILS (USCS) (ASTM D422)

CLIENT:	Lake Erie Development Corporation	**LAB No.:**	WLA 280-14
PROJECT/ SITE:	LEEDCo Project Icebreaker - Cleveland, Ohio, USA	**PROJECT No.:**	82317

Borehole No.:	Boring BH-1	Sample No.:	ST-5
Depth:	43' - 45'	Enclosure:	-

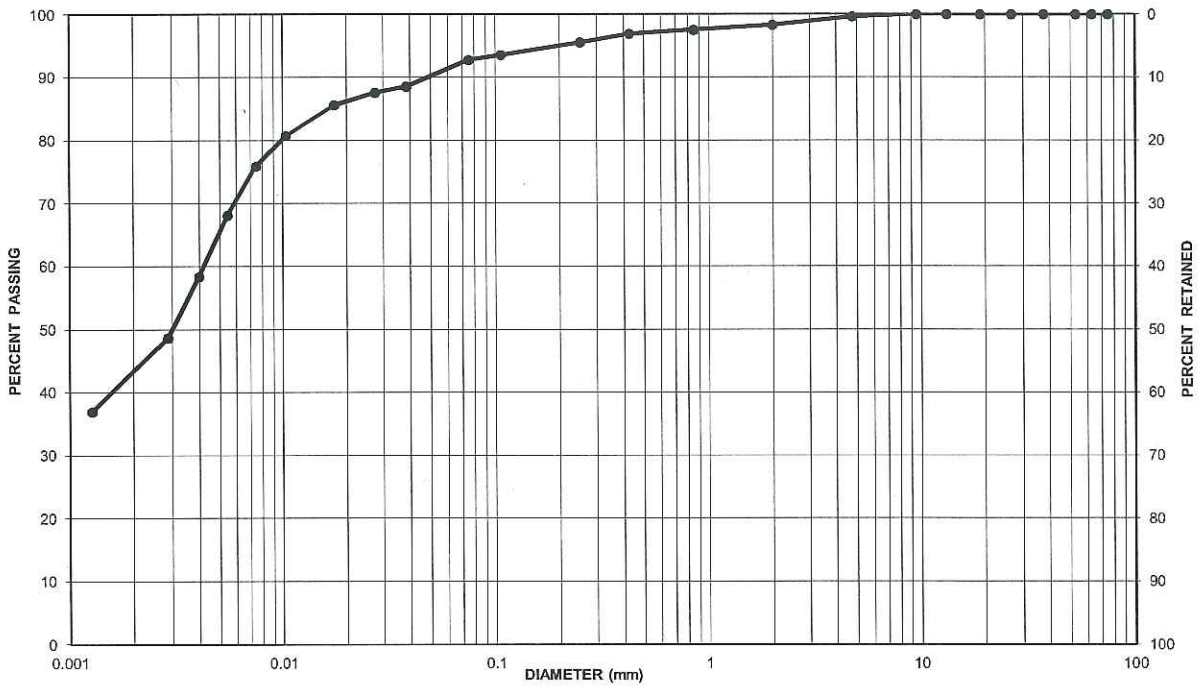

CLAY & SILT	SAND			GRAVEL	
	FINE	MEDIUM	COARSE	FINE	COARSE
UNIFIED SOIL CLASSIFICATION SYSTEM					

Soil Description	Gravel	Sand	Clay & Silt
Silt and Clay, trace sand	0	7	93

REMARKS:

PERFORMED BY:	B. Brown	**DATE:**	May 23, 2013
VERIFIED BY:	Abdul Hafeez Khan, P.Eng.	**DATE:**	May 31, 2013

CONESTOGA-ROVERS & ASSOCIATES

PARTICLE-SIZE ANALYSIS OF SOILS (USCS) (ASTM D422)

CLIENT:	Lake Erie Development Corporation	**LAB No.:**	WLA 280-16
PROJECT/ SITE:	LEEDCo Project Icebreaker - Cleveland, Ohio, USA	**PROJECT No.:**	82317

Borehole No.:	Boring BH-1	Sample No.:	ST-7
Depth:	53' - 55'	Enclosure:	-

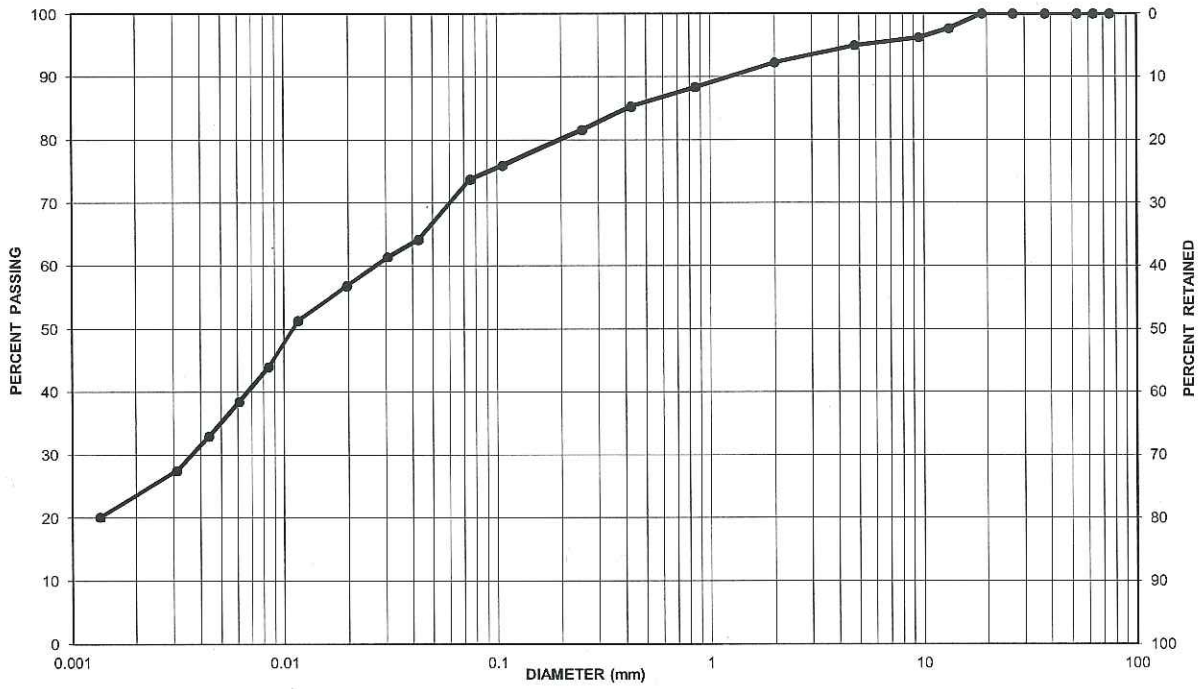

CLAY & SILT	SAND			GRAVEL	
	FINE	MEDIUM	COARSE	FINE	COARSE
UNIFIED SOIL CLASSIFICATION SYSTEM					

Soil Description	Gravel	Sand	Clay & Silt
clayey sandy Silt, trace gravel	5	21	74

REMARKS:

PERFORMED BY:	B. Brown	**DATE:**	May 23, 2013
VERIFIED BY:	Abdul Hafeez Khan, P.Eng.	**DATE:**	May 31, 2013

CONESTOGA-ROVERS & ASSOCIATES

PARTICLE-SIZE ANALYSIS OF SOILS (USCS) (ASTM D422)

CLIENT:	Lake Erie Development Corporation	**LAB No.:**	WLA 280-18
PROJECT/ SITE:	LEEDCo Project Icebreaker - Cleveland, Ohio, USA	**PROJECT No.:**	82317

Borehole No.:	Boring BH-1	Sample No.:	SR-4
Depth:	68' - 78'	Enclosure:	-

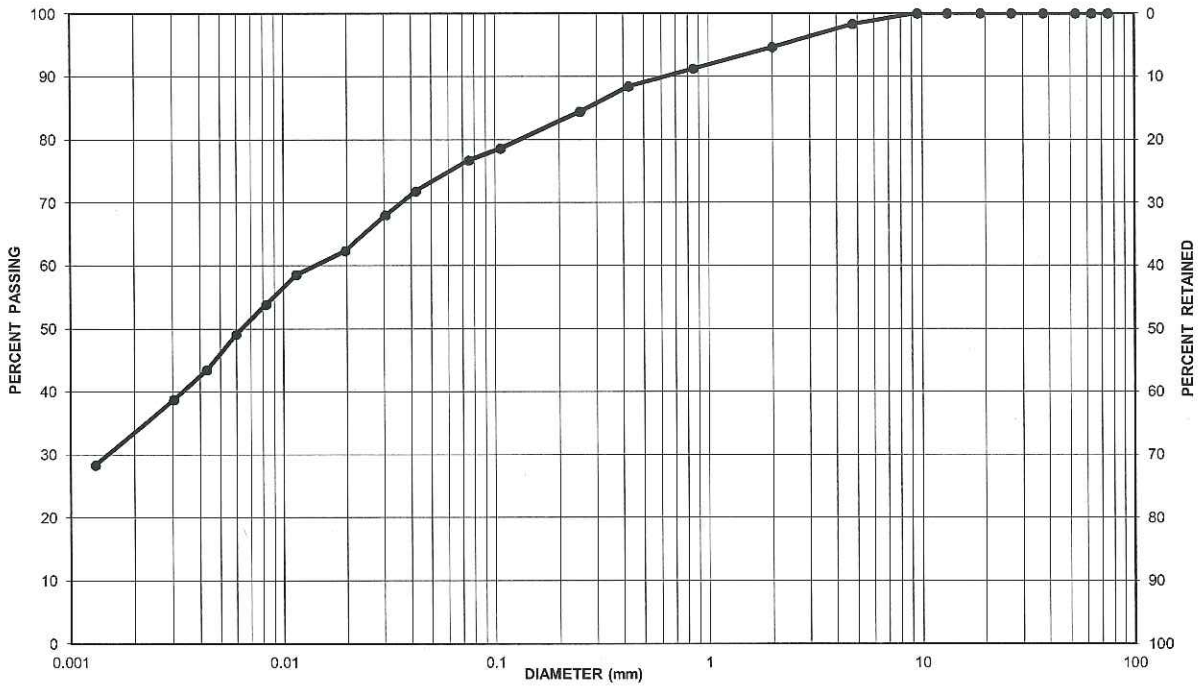

CLAY & SILT	SAND			GRAVEL	
	FINE	MEDIUM	COARSE	FINE	COARSE
UNIFIED SOIL CLASSIFICATION SYSTEM					

Soil Description	Gravel	Sand	Clay & Silt
sandy clayey Silt, trace gravel	1	22	77

REMARKS:

PERFORMED BY:	B. Brown	**DATE:**	May 24, 2013
VERIFIED BY:	Abdul Hafeez Khan, P.Eng.	**DATE:**	May 31, 2013

CONESTOGA-ROVERS & ASSOCIATES

LABORATORY DETERMINATION OF DENSITY
(ASTM D 7263)

CLIENT: Lake Erie Development Corporation

LAB No.: WLA 280

PROJECT/SITE: LEEDCO Icebreaker Project - Cleveland, Ohio, U.S.A.

PROJECT No.: 82317

Lab No.	Sample I.D.	Sample Depth	Sample Description	Moisture Content %	Bulk Density (wet) (kg/m^3)	Unit Weight (wet) (kN/m^3)	Bulk Density (dry) (kg/m^3)	Unit Weight (dry) (kN/m^3)
WLA 280-1	SR-1	1' - 5'	Sand, some silt & clay, trace gravel	24.5	2076	20.4	1668	16.4
WLA 280-2	SR-1	5' - 6.5'	Sand, trace silt	18.2	2272	22.3	1922	18.9
WLA 280-3	SR-1	6.5' - 8.7'	silty Sand, trace clay, trace gravel	19.4	2144	21.0	1795	17.6
WLA 280-8	SR-3	16' - 19.8'	Sand, trace silt, some gravel	11.4	1882	18.5	1689	16.6
WLA 280-12	ST-3	33' - 35'	clayey Silt, trace sand	28.6	1651	16.2	1284	12.6
WLA 280-14	ST-5	43' - 45'	Silt and Clay, trace sand	32.0	1734	17.0	1313	12.9
WLA 280-16	ST-7	53' - 55'	clayey sandy Silt, trace gravel	19.2	1872	18.4	1569	15.4
WLA 280-18	SR-4	68' - 78'	sandy clayey Silt, trace gravel	17.0	2158	21.2	1845	18.1
WLA 280-24	RC-3	110' - 120'	Limestone, grey, strong, slightly weathered	2.2	2660	26.1	2604	25.5

REMARKS :

TESTED BY: H. Arthur / B. Brown

TEST DATE: May 22 - 24, 2013

APPROVED BY: Abdul Hafeez Khan, P.Eng.

APPROVED DATE: May 31, 2013

CONESTOGA-ROVERS & ASSOCIATES

SPECIFIC-GRAVITY OF SOILS (ASTM D854)

CLIENT: Lake Erie Development Corporation **LAB No.:** WLA 280-1

PROJECT/ SITE: LEEDCo Project Icebreaker - Cleveland, Ohio, USA **PROJECT No.:** 82317

Borehole No: Boring BH-1 Sample No: SR-1

Sample Depth: 1.0' - 5.0' Method of Air Removal: Vacuum

EQUIPEMENT USED FOR TESTING

Scale No.: 4 Vacuum Pump No.: 1

Oven No.: 1 Hot Plate No.: -

Sieve Nos: 4 Thermometer No.: 2

Trial No.	1	2	3
Flask No.	*8*	*6*	*3*
Temperature (°C)	*22.6*	*22.6*	*22.5*
Flask with Lid + Soil (gms)	*276.51*	*275.89*	*256.36*
Mass of Flask with Lid (gms)	199.72	194.76	173.16
Dry Mass of Soil (gms) (C)	76.79	81.13	83.20
Flask with Lid + Water (gms) (B)	698.20	693.40	671.50
Total Mass Flask + Lid + Soil + Water (gms) (D)	*746.00*	*743.50*	*722.70*
(B + C) - D (gms)	28.99	31.03	32.00
Relative Density	2.650	2.620	2.600
		Mean Relative Density	2.62
		Correction Factor	0.9996
		Specific Gravity @ 20°C	2.62

REMARKS:

PERFORMED BY: H.Arthur **DATE:** May 28, 2013

VERIFIED BY: Abdul Hafeez Khan, P.Eng. **DATE:** May 31, 2013

CONESTOGA-ROVERS & ASSOCIATES

SPECIFIC-GRAVITY OF SOILS (ASTM D854)

CLIENT: Lake Erie Development Corporation **LAB No.:** WLA 280-2

PROJECT/ SITE: LEEDCo Project Icebreaker - Cleveland, Ohio, USA **PROJECT No.:** 82317

Borehole No: Boring BH-1 Sample No: SR-1

Sample Depth: 5.0' - 6.5' Method of Air Removal: Vacuum

EQUIPEMENT USED FOR TESTING

Scale No.: 4 Vacuum Pump No.: 1

Oven No.: 1 Hot Plate No.: -

Sieve Nos: 4 Thermometer No.: 2

Trial No.	1	2	3
Flask No.	*1*	*2*	*5*
Temperature (°C)	*22.6*	*22.7*	*22.6*
Flask with Lid + Soil (gms)	*256.09*	*253.19*	*259.86*
Mass of Flask with Lid (gms)	171.40	175.40	177.38
Dry Mass of Soil (gms) (C)	84.69	77.79	82.48
Flask with Lid + Water (gms) (B)	669.40	673.60	675.60
Total Mass Flask + Lid + Soil + Water (gms) (D)	*722.30*	*722.00*	*726.80*
(B + C) - D (gms)	31.79	29.39	31.28
Relative Density	2.670	2.650	2.640

Mean Relative Density	2.65
Correction Factor	0.9996
Specific Gravity @ 20°C	2.65

REMARKS:

PERFORMED BY: H. Arthur **DATE:** May 28, 2013

VERIFIED BY: Abdul Hafeez Khan, P.Eng. **DATE:** May 31, 2013

CONESTOGA-ROVERS & ASSOCIATES

SPECIFIC-GRAVITY OF SOILS (ASTM D854)

CLIENT: Lake Erie Development Corporation **LAB No.:** WLA 280-3

PROJECT/ SITE: LEEDCo Project Icebreaker - Cleveland, Ohio, USA **PROJECT No.:** 82317

Borehole No: Boring BH-1 Sample No: SR-1

Sample Depth: 6.5' - 8.7' Method of Air Removal: Vacuum

EQUIPEMENT USED FOR TESTING

Scale No.: 4 Vacuum Pump No.: 1

Oven No.: 1 Hot Plate No.: -

Sieve Nos: 4 Thermometer No.: 2

Trial No.	1	2	3
Flask No.	*7*	*8*	*4*
Temperature (°C)	*23.0*	*23.1*	*22.8*
Flask with Lid + Soil (gms)	*272.07*	*273.22*	*243.56*
Mass of Flask with Lid (gms)	203.43	199.72	170.66
Dry Mass of Soil (gms) (C)	68.64	73.50	72.90
Flask with Lid + Water (gms) (B)	702.00	698.20	668.90
Total Mass Flask + Lid + Soil + Water (gms) (D)	*744.69*	*744.12*	*714.30*
(B + C) - D (gms)	25.95	27.58	27.50
Relative Density	2.650	2.670	2.650

Mean Relative Density	2.66
Correction Factor	0.9996
Specific Gravity @ 20°C	2.66

REMARKS:

PERFORMED BY: H.Arthur **DATE:** May 27, 2013

VERIFIED BY: Abdul Hafeez Khan, P.Eng. **DATE:** May 31, 2013

CONESTOGA-ROVERS & ASSOCIATES

SPECIFIC-GRAVITY OF SOILS (ASTM D854)

CLIENT: Lake Erie Development Corporation **LAB No.:** WLA 280-8

PROJECT/ SITE: LEEDCo Project Icebreaker - Cleveland, Ohio, USA **PROJECT No.:** 82317

Borehole No: Boring BH-1 Sample No: SR-3

Sample Depth: 16.0' - 19.8' Method of Air Removal: Vacuum

EQUIPEMENT USED FOR TESTING

Scale No.: 4 Vacuum Pump No.: 1

Oven No.: 1 Hot Plate No.: -

Sieve Nos: 4 Thermometer No.: 2

Trial No.	1	2	3
Flask No.	*4*	*5*	*8*
Temperature (°C)	*22.5*	*22.5*	*22.5*
Flask with Lid + Soil (gms)	*254.57*	*257.28*	*281.85*
Mass of Flask with Lid (gms)	170.66	177.38	199.72
Dry Mass of Soil (gms) (C)	83.91	79.90	82.13
Flask with Lid + Water (gms) (B)	668.90	675.60	698.20
Total Mass Flask + Lid + Soil + Water (gms) (D)	*720.50*	*725.60*	*750.50*
(B + C) - D (gms)	32.31	29.90	29.83
Relative Density	2.600	2.670	2.750

Mean Relative Density	2.67
Correction Factor	0.9996
Specific Gravity @ 20°C	2.67

REMARKS:

PERFORMED BY: H.Arthur **DATE:** May 28, 2013

VERIFIED BY: Abdul Hafeez Khan, P.Eng. **DATE:** May 31, 2013

CONESTOGA-ROVERS & ASSOCIATES

SPECIFIC-GRAVITY OF SOILS (ASTM D854)

CLIENT: Lake Erie Development Corporation **LAB No.:** WLA 280-10

PROJECT/ SITE: LEEDCo Project Icebreaker - Cleveland, Ohio, USA **PROJECT No.:** 82317

Borehole No: Boring BH-1 Sample No: ST-1

Sample Depth: 21' - 23' Method of Air Removal: Vacuum

EQUIPEMENT USED FOR TESTING

Scale No.: 4 Vacuum Pump No.: 1

Oven No.: 1 Hot Plate No.: -

Sieve Nos: 4 Thermometer No.: 2

Trial No.	1	2	3
Flask No.	*7*	*2*	*4*
Temperature (°C)	*22.8*	*22.9*	*22.9*
Flask with Lid + Soil (gms)	*257.88*	*232.29*	*222.79*
Mass of Flask with Lid (gms)	203.43	175.40	170.66
Dry Mass of Soil (gms) (C)	54.45	56.89	52.13
Flask with Lid + Water (gms) (B)	702.00	673.60	668.90
Total Mass Flask + Lid + Soil + Water (gms) (D)	*736.70*	*709.80*	*702.70*
(B + C) - D (gms)	19.75	20.69	18.33
Relative Density	2.770	2.760	2.850

Mean Relative Density	2.79
Correction Factor	0.9996
Specific Gravity @ 20°C	2.79

REMARKS:

PERFORMED BY: H.Arthur **DATE:** May 28, 2013

VERIFIED BY: Abdul Hafeez Khan, P.Eng. **DATE:** May 31, 2013

CONESTOGA-ROVERS & ASSOCIATES

SPECIFIC-GRAVITY OF SOILS (ASTM D854)

CLIENT: Lake Erie Development Corporation **LAB No.:** WLA 280-14

PROJECT/ SITE: LEEDCo Project Icebreaker - Cleveland, Ohio, USA **PROJECT No.:** 82317

Borehole No: Boring BH-1 Sample No: ST-5

Sample Depth: 43' - 45' Method of Air Removal: Vacuum

EQUIPEMENT USED FOR TESTING

Scale No.: 4 Vacuum Pump No.: 1

Oven No.: 1 Hot Plate No.: -

Sieve Nos: 4 Thermometer No.: 2

Trial No.	1	2	3
Flask No.	*5*	*6*	*3*
Temperature (°C)	*23.2*	*23.0*	*22.8*
Flask with Lid + Soil (gms)	*222.70*	*230.85*	*226.39*
Mass of Flask with Lid (gms)	177.38	194.76	173.16
Dry Mass of Soil (gms) (C)	45.32	36.09	53.23
Flask with Lid + Water (gms) (B)	675.60	693.40	671.50
Total Mass Flask + Lid + Soil + Water (gms) (D)	*703.90*	*716.20*	*705.20*
(B + C) - D (gms)	17.02	13.29	19.53
Relative Density	2.670	2.730	2.730

Mean Relative Density	2.71
Correction Factor	0.9993
Specific Gravity @ 20°C	2.71

REMARKS:

PERFORMED BY: H.Arthur **DATE:** May 27, 2013

VERIFIED BY: Abdul Hafeez Khan, P.Eng. **DATE:** May 31, 2013

CONESTOGA-ROVERS & ASSOCIATES

SPECIFIC-GRAVITY OF SOILS (ASTM D854)

CLIENT: Lake Erie Development Corporation **LAB No.:** WLA 280-16

PROJECT/ SITE: LEEDCo Project Icebreaker - Cleveland, Ohio, USA **PROJECT No.:** 82317

Borehole No: Boring BH-1 Sample No: ST-7

Sample Depth: 53' - 55' Method of Air Removal: Vacuum

EQUIPEMENT USED FOR TESTING

Scale No.: 4 Vacuum Pump No.: 1

Oven No.: 1 Hot Plate No.: -

Sieve Nos: 4 Thermometer No.: 2

Trial No.	1	2	3
Flask No.	*1*	*6*	*3*
Temperature (°C)	*23.0*	*22.3*	*22.4*
Flask with Lid + Soil (gms)	*223.13*	*253.13*	*233.96*
Mass of Flask with Lid (gms)	171.40	194.76	173.16
Dry Mass of Soil (gms) (C)	51.73	58.37	60.80
Flask with Lid + Water (gms) (B)	669.40	693.40	671.50
Total Mass Flask + Lid + Soil + Water (gms) (D)	*701.80*	*729.60*	*709.80*
(B + C) - D (gms)	19.33	22.17	22.50
Relative Density	2.690	2.630	2.700

Mean Relative Density	2.67
Correction Factor	0.9996
Specific Gravity @ 20°C	2.67

REMARKS:

PERFORMED BY: H.Arthur **DATE:** May 29, 2013

VERIFIED BY: Abdul Hafeez Khan, P.Eng. **DATE:** May 31, 2013

CONESTOGA-ROVERS & ASSOCIATES

SPECIFIC-GRAVITY OF SOILS (ASTM D854)

CLIENT: Lake Erie Development Corporation **LAB No.:** WLA 280-18

PROJECT/ SITE: LEEDCo Project Icebreaker - Cleveland, Ohio, USA **PROJECT No.:** 82317

Borehole No: Boring BH-1 Sample No: SR-4

Sample Depth: 68' - 78' Method of Air Removal: Vacuum

EQUIPEMENT USED FOR TESTING

Scale No.: 4 Vacuum Pump No.: 1

Oven No.: 1 Hot Plate No.: -

Sieve Nos: 4 Thermometer No.: 2

Trial No.	1	2	3
Flask No.	*4*	*3*	*7*
Temperature (°C)	*23.1*	*23.0*	*22.7*
Flask with Lid + Soil (gms)	*229.86*	*229.26*	*264.72*
Mass of Flask with Lid (gms)	170.66	173.16	203.43
Dry Mass of Soil (gms) (C)	59.20	56.10	61.29
Flask with Lid + Water (gms) (B)	668.90	671.50	702.00
Total Mass Flask + Lid + Soil + Water (gms) (D)	*706.00*	*706.60*	*740.20*
(B + C) - D (gms)	22.10	21.00	23.09
Relative Density	2.680	2.680	2.660

Mean Relative Density	2.67
Correction Factor	0.9996
Specific Gravity @ 20°C	2.67

REMARKS:

PERFORMED BY: H.Arthur **DATE:** May 23, 2013

VERIFIED BY: Abdul Hafeez Khan, P.Eng. **DATE:** May 31, 2013

CONESTOGA-ROVERS & ASSOCIATES

CONSOLIDATED UNDRAINED TRIAXIAL COMPRESSION TEST
FOR COHESIVE SOILS (ASTM D4767 - 11)

CLIENT:	Lake Erie Development Corporation	**LAB No.:**	WLA 280-11
PROJECT/ SITE:	LEEDCo Project Icebreaker / Cleveland, Ohio, USA	**PROJECT No.:**	82317

BH No.	**Boring BH-1**
Sample ID	**ST-2**
Depth, m	**7.6-8.2**
Sampling Date	**N/A**
Sample Description	**clayey SILT, trace sand**

Sample Parameters				
Initial		***Specimen A***	***Specimen B***	***Specimen C***
Diameter	cm	*3.80*	*3.80*	*3.80*
Height	cm	*8.00*	*8.00*	*8.00*
Volume	cm^3	90.7	90.7	90.7
Wet Mass	g	*169.4*	*168.0*	*166.7*
Dry Density	kg/m^3	*1340*	*1289*	*1268*
Water content	%	*39.3*	*43.6*	*44.9*
Specific gravity (assumed)		*2.7*	*2.7*	*2.7*
Void ratio		*0.99*	*1.07*	*1.11*
Degree of saturation		*1.0*	*1.0*	*1.0*
Volume change due to the consolidation, cm^3		*6.9*	*10.9*	*12.9*
Before Shear				
Volume	cm^3	83.8	79.8	77.8
Wet Mass	g	*162.1*	*157.3*	*153.9*
Dry Density	kg/m^3	*1442*	*1453*	*1465*
Water content	%	*34.1*	*35.6*	*35.0*
Void ratio		*0.85*	*0.84*	*0.82*
Degree of saturation		*1.0*	*1.0*	*1.0*
B - value		*1.00*	*1.00*	*0.97*

		Specimen A	***Specimen B***	***Specimen C***
Cell pressure	kPa	599.4	595.5	595.6
Back pressure	kPa	454.5	309.3	212.3
Consolidation stress	kPa	144.9	286.2	383.3
Rate of strain	%/hour	0.4	0.4	0.4
Vertical strain at failure	%	8.00	8.00	7.50
Deviator stress at failure	kPa	111	161	229
Excess pore pressure at failure	kPa	82.4	174.3	227.6
A_f coefficient		0.74	1.08	0.99

Total Stresses		***Specimen A***	***Specimen B***	***Specimen C***
Minor principal stress, σ_3	kPa	144.9	286.2	383.3
Major principal stress, σ_1	kPa	255.8	447.0	612.4
Radius, $(\sigma_1-\sigma_3)/2$	kPa	55.4	80.4	114.6
Intersection point, $(\sigma_1+\sigma_3)/2$	kPa	200.3	366.6	497.9

Effective Stresses		***Specimen A***	***Specimen B***	***Specimen C***
Minor principal stress, σ'_3	kPa	62.5	111.9	155.7
Major principal stress, σ'_1	kPa	173.4	272.7	384.8
Radius, $(\sigma'_1-\sigma'_3)/2$	kPa	55.4	80.4	114.6
Intersection point, $(\sigma'_1+\sigma'_3)/2$	kPa	117.9	192.3	270.3
Shear Termination Criteria		Maximum Stress Ratio		

REMARKS:

PERFORMED BY:	Casey Adachi	**DATE:**	5/24/2013-6/6/2013
VERIFIED BY:	Michael Braverman	**DATE:**	7-Jun-13

CONESTOGA-ROVERS & ASSOCIATES

CONSOLIDATED UNDRAINED TRIAXIAL COMPRESSION TEST
FOR COHESIVE SOILS (ASTM D4767 - 11)

CLIENT:	Lake Erie Development Corporation	**LAB No.:**	WLA 280-11
PROJECT/ SITE:	LEEDCo Project Icebreaker / Cleveland, Ohio, USA	**PROJECT No.:**	82317

BH No.	**Boring BH-1**
Sample ID	**ST-2**
Depth, m	**7.6-8.2**
Sampling Date	**N/A**
Sample description	**clayey SILT, trace sand**

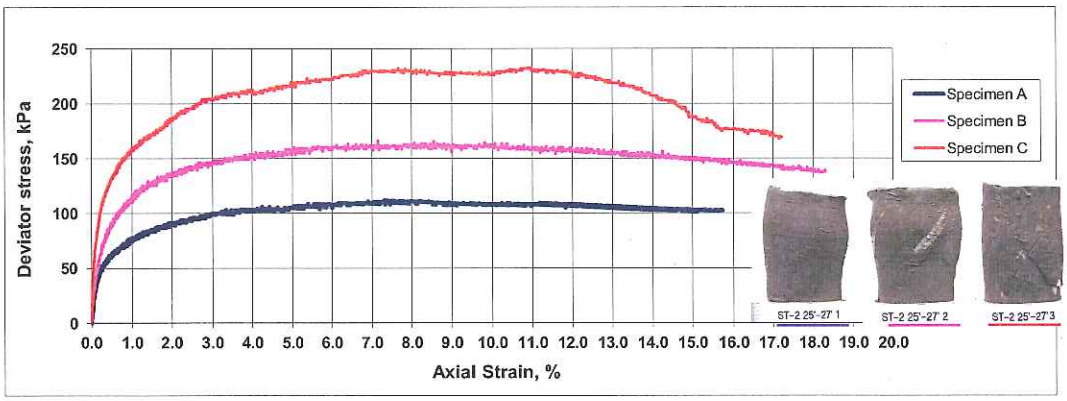

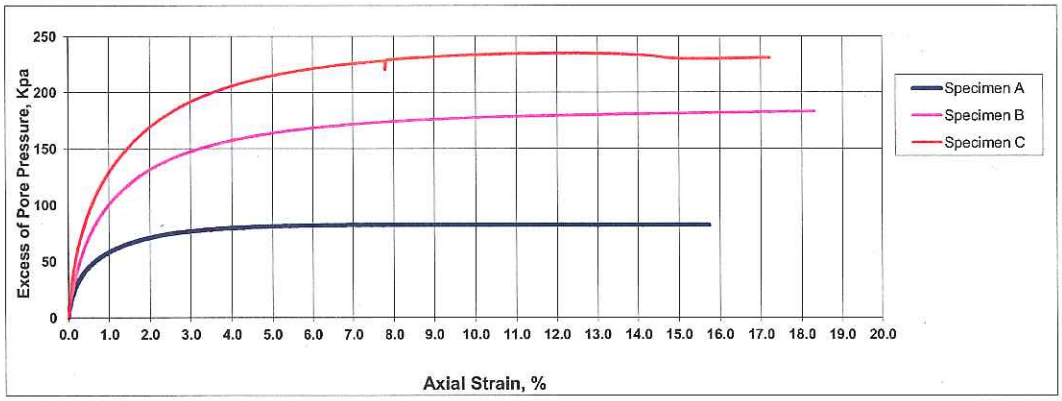

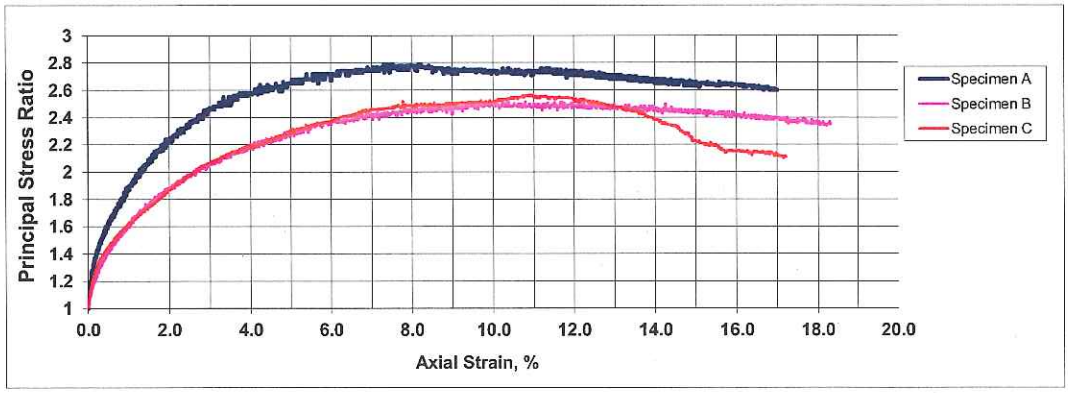

REMARKS:

PERFORMED BY:	Casey Adachi	**DATE:**	5/24/2013-6/6/2013
VERIFIED BY:	Michael Braverman	**DATE:**	7-Jun-13

CONESTOGA-ROVERS & ASSOCIATES

CONSOLIDATED UNDRAINED TRIAXIAL COMPRESSION TEST
FOR COHESIVE SOILS (ASTM D4767 - 11)

CLIENT:	Lake Erie Development Corporation	**LAB No.:**	WLA 280-11
PROJECT/ SITE:	LEEDCo Project Icebreaker / Cleveland, Ohio, USA	**PROJECT No.:**	82317

BH No.	**Boring BH-1**
Sample ID	**ST-2**
Depth, m	**7.6-8.2**
Sampling Date	**N/A**
Sample description	**clayey SILT, trace sand**

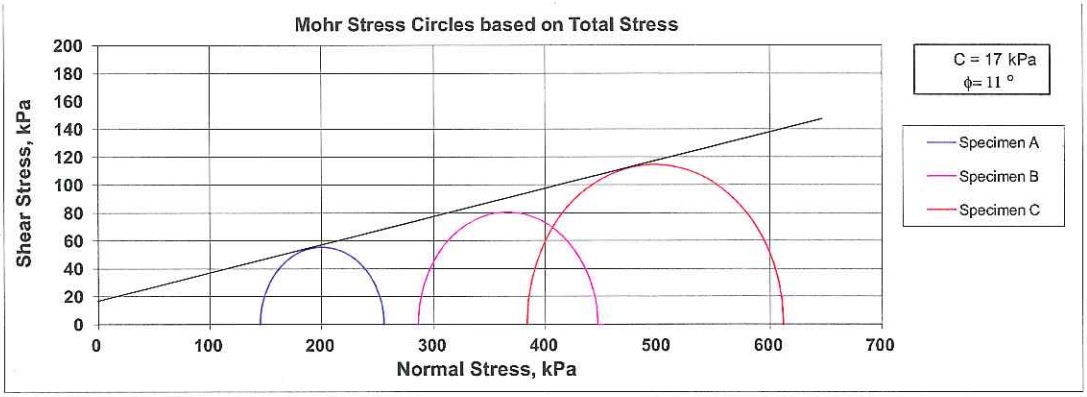

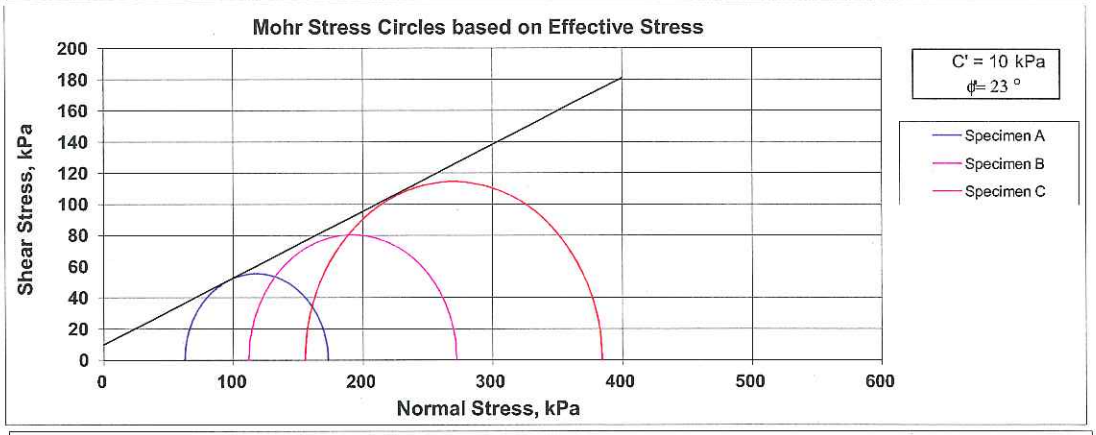

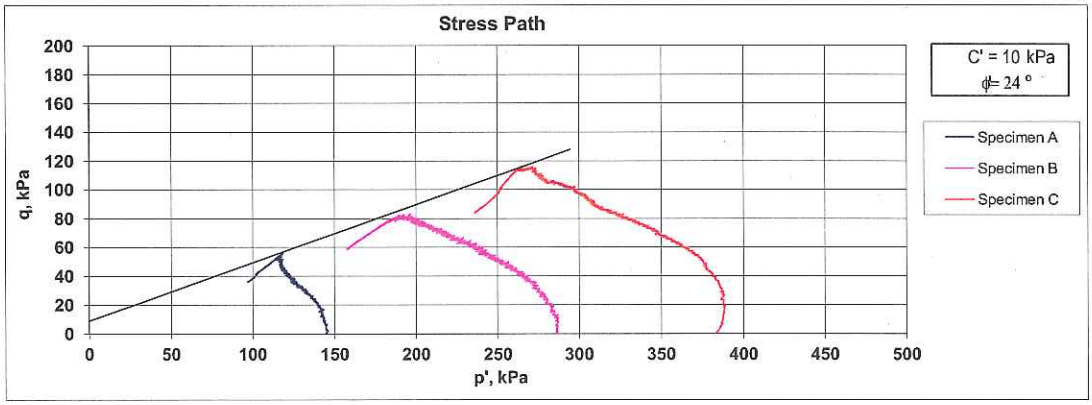

REMARKS:

PERFORMED BY:	Casey Adachi	**DATE:**	5/24/2013-6/6/2013
VERIFIED BY:	Michael Braverman	**DATE:**	7-Jun-13

CONESTOGA-ROVERS & ASSOCIATES

CONSOLIDATED UNDRAINED TRIAXIAL COMPRESSION TEST (ASTM D4767)

CLIENT:	Lake Erie Development Corporation	**LAB No.:**	WLA 280-15
PROJECT/ SITE:	LEEDCo Icebreaker / Cleveland, Ohio, U.S.A.	**PROJECT No.**	82317

Unconsolidated Undrained Triaxial Compression Test for Cohesive Soils

BH No.	**Boring BH-1**
Sample ID	**ST-6**
Depth, m	**14.6-15.2**
Sampling Date	**N/A**
Sample description	**clayey SILT, trace sand**

Sample Parameters		
Diameter	cm	*7.37*
Height	cm	*15.02*
Volume	cm^3	640.0
Wet Mass	g	*1319.4*
Dry Density	kg/m^3	*1737*
Water content	%	*18.7*
Specific gravity (assumed)		*2.7*
Void ratio		*0.55*
Degree of saturation		*0.9*

Total Stresses		
Cell pressure	kPa	360
Rate of strain	%/hour	59.9
Vertical strain at failure	%	22.00
Minor principal stress, σ_3	kPa	360
Major principal stress, σ_1	kPa	404.6
Deviator stress at failure	kPa	45

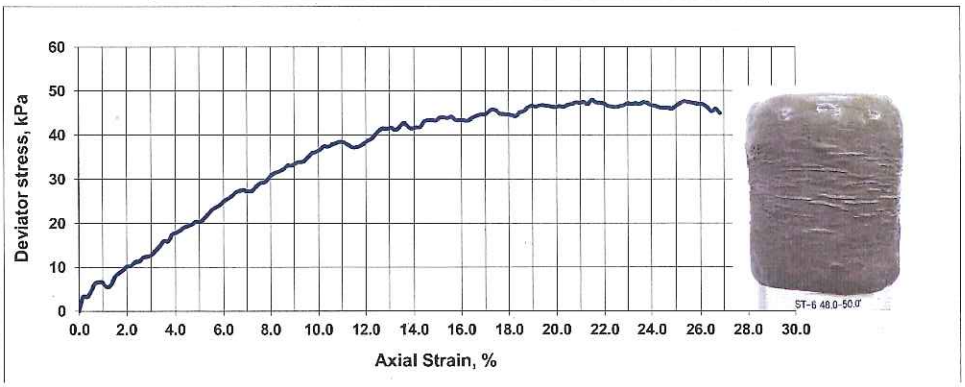

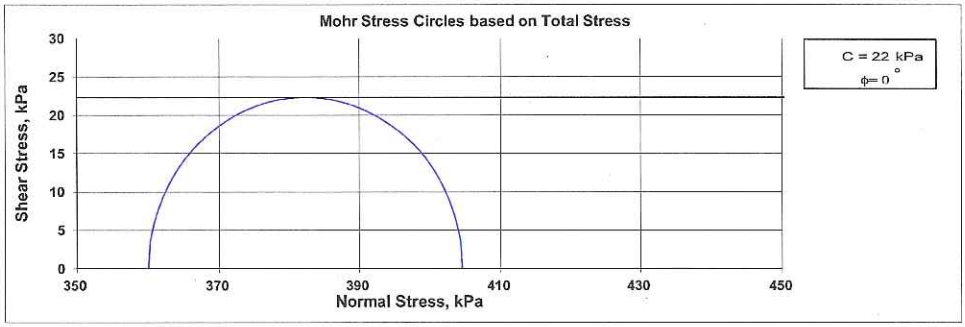

REMARKS:

PERFORMED BY:	Casey Adachi	**DATE:**	22-May-13
VERIFIED BY:	Michael Braverman	**DATE:**	7-Jun-13

CONSOLIDATED UNDRAINED TRIAXIAL
COMPRESSION TEST (ASTM D4767)

CLIENT:	Lake Erie Development Corporation	**LAB No.:**	WLA280-18
PROJECT/ SITE:	LEEDCo Icebreaker - Cleveland, Ohio, U.S.A.	**PROJECT No.**	82317

Unconsolidated Undrained Triaxial Compression Test for Cohesive Soils

BH No.	**Boring BH-1**
Sample ID	**SR-4**
Depth, m	**20.7-23.8**
Sampling Date	**N/A**
Sample description	**sandy SILT, trace to some clay, trace gravel**

Sample Parameters		
Diameter	cm	*5.00*
Height	cm	*10.40*
Volume	cm^3	204.2
Wet Mass	g	*444.9*
Dry Density	kg/m^3	*1884*
Water content	%	*15.7*
Specific gravity (assumed)		2.7
Void ratio		*0.43*
Degree of saturation		*1.0*

Total Stresses		
Cell pressure	kPa	420.6
Rate of strain	%/hour	56.8
Vertical strain at failure	%	24.00
Minor principal stress, σ_3	kPa	420.6
Major principal stress, σ_1	kPa	596.0
Deviator stress at failure	kPa	175

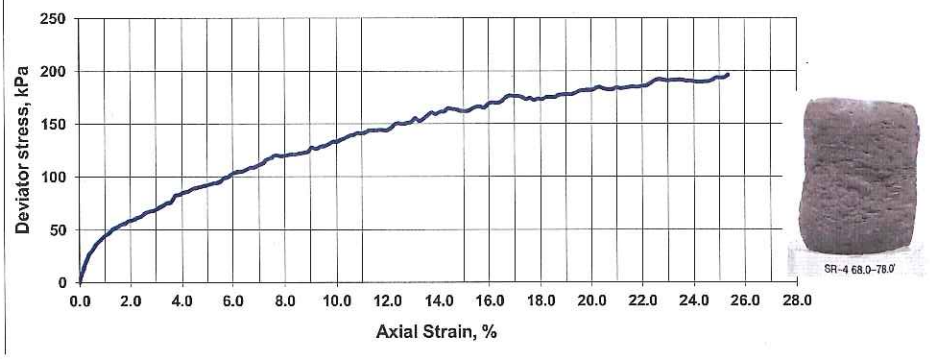

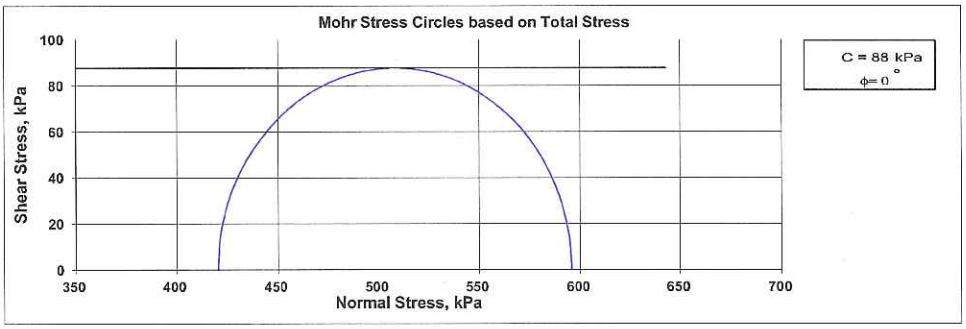

REMARKS:

PERFORMED BY:	Casey Adachi	**DATE:**	23-May-13
VERIFIED BY:	Michael Braverman	**DATE:**	7-Jun-13

CONESTOGA-ROVERS & ASSOCIATES

CONSOLIDATED UNDRAINED TRIAXIAL COMPRESSION TEST
FOR COHESIVE SOILS (ASTM D4767 - 11)

CLIENT:	Lake Erie Development Corporation	**LAB No.:**	WLA 280-17
PROJECT/ SITE:	LEEDCo Project Icebreaker / Cleveland, Ohio, USA	**PROJECT No.:**	82317

BH No.	**Boring BH-1**
Sample ID	**ST-8**
Depth, m	**17.7-18.3 (below sediments level)**
Sampling Date	**N/A**
Sample Description	**clayey SILT, trace sand, trace gravel**

Sample Parameters				
Initial		***Specimen A***	***Specimen B***	***Specimen C***
Diameter	cm	*5.00*	*5.00*	*5.00*
Height	cm	*10.40*	*10.40*	*10.40*
Volume	cm^3	204.2	204.2	204.2
Wet Mass	g	*440.0*	*440.0*	*446.2*
Dry Density	kg/m^3	*1811*	*1733*	*1843*
Water content	%	*19.0*	*24.3*	*18.6*
Specific gravity (assumed)		*2.7*	*2.7*	*2.7*
Void ratio		*0.47*	*0.54*	*0.45*
Degree of saturation		*1.0*	*1.0*	*1.0*
Volume change due to the consolidation, cm^3		*12.1*	*17.1*	*16.8*
Before Shear				
Volume	cm^3	192.1	187.1	187.4
Wet Mass	g	*420.3*	*423.1*	*427.7*
Dry Density	kg/m^3	*1898*	*1943*	*1971*
Water content	%	*15.3*	*16.4*	*15.8*
Void ratio		*0.41*	*0.37*	*0.35*
Degree of saturation		*1.0*	*1.0*	*1.0*
B - value		*1.00*	*0.99*	*1.00*

		Specimen A	***Specimen B***	***Specimen C***
Cell pressure	kPa	593.1	596	592.9
Back pressure	kPa	394.5	197.9	117.3
Consolidation stress	kPa	198.6	398.1	475.6
Rate of strain	%/hour	0.2	0.3	0.2
Vertical strain at failure	%	4.50	6.50	8.50
Deviator stress at failure	kPa	221	418	549
Excess pore pressure at failure	kPa	105.9	201.0	208.9
A_f coefficient		0.48	0.48	0.38

Total Stresses		***Specimen A***	***Specimen B***	***Specimen C***
Minor principal stress, σ_3	kPa	198.6	398.1	475.6
Major principal stress, σ_1	kPa	419.2	816.0	1025.0
Radius, $(\sigma_1-\sigma_3)/2$	kPa	110.3	209.0	274.7
Intersection point, $(\sigma_1+\sigma_3)/2$	kPa	308.9	607.1	750.3

Effective Stresses		***Specimen A***	***Specimen B***	***Specimen C***
Minor principal stress, σ'_3	kPa	92.7	197.1	266.7
Major principal stress, σ'_1	kPa	313.3	615.0	816.1
Radius, $(\sigma'_1-\sigma'_3)/2$	kPa	110.3	209.0	274.7
Intersection point, $(\sigma'_1+\sigma'_3)/2$	kPa	203.0	406.1	541.4
Shear Termination Criteria		Maximum Stress Ratio		

REMARKS:

PERFORMED BY:	Casey Adachi	**DATE:**	5/28/2013-6/10/2013
VERIFIED BY:	Michael Braverman	**DATE:**	7-Jun-13

CONESTOGA-ROVERS & ASSOCIATES

CONSOLIDATED UNDRAINED TRIAXIAL COMPRESSION TEST
FOR COHESIVE SOILS (ASTM D4767 - 11)

CLIENT:	Lake Erie Development Corporation	**LAB No.:**	WLA 280-17
PROJECT/ SITE:	LEEDCo Project Icebreaker / Cleveland, Ohio, USA	**PROJECT No.:**	82317

BH No.	**Boring BH-1**
Sample ID	**ST-8**
Depth, m	**17.7-18.3 (below sediments level)**
Sampling Date	**N/A**
Sample description	**clayey SILT, trace sand, trace gravel**

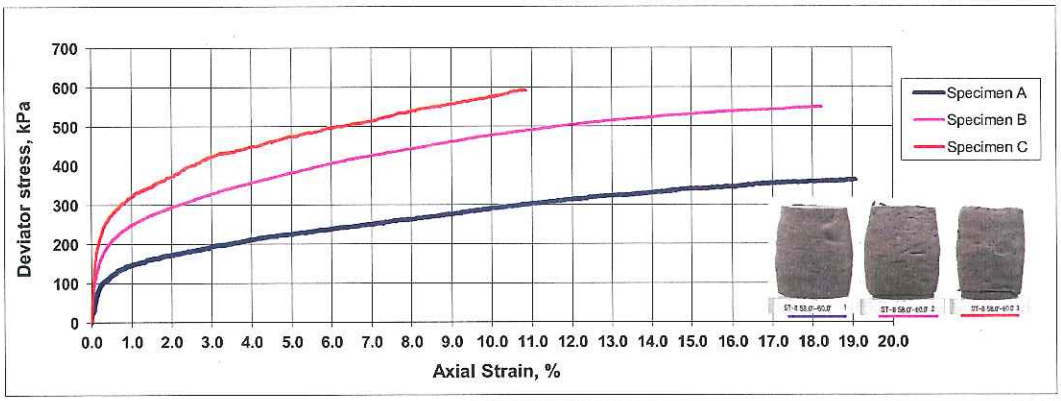

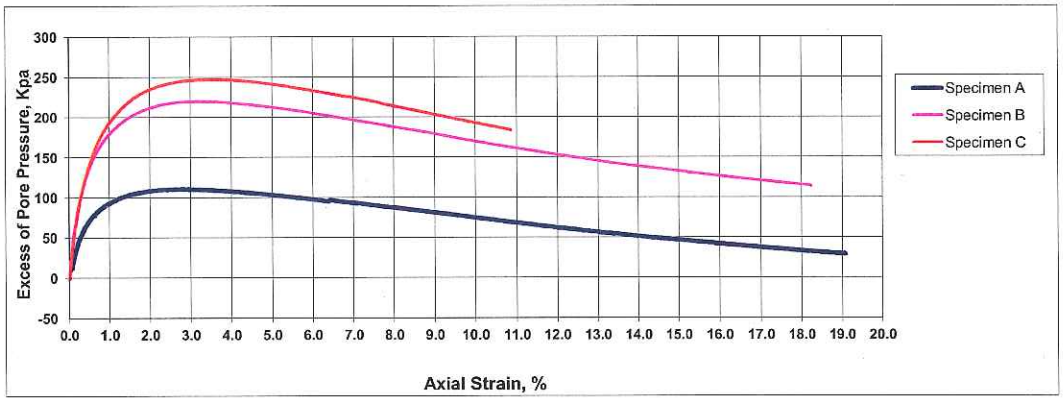

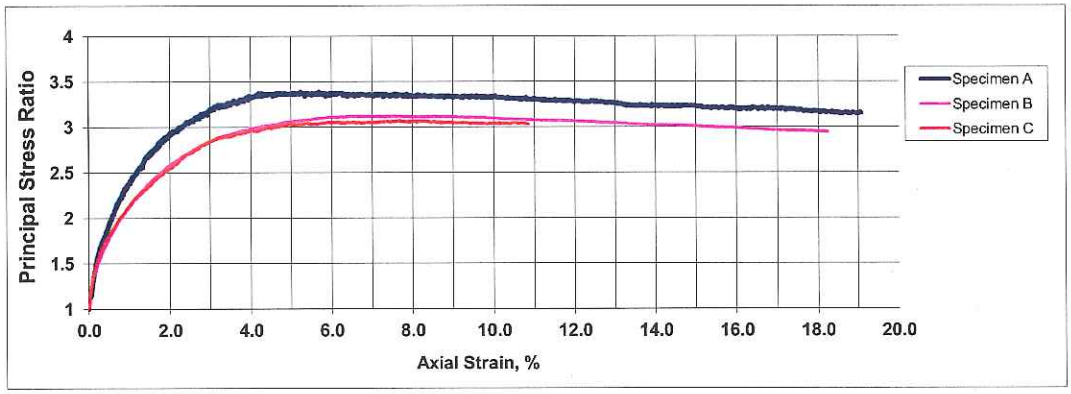

REMARKS:

PERFORMED BY:	Casey Adachi	**DATE:**	5/28/2013-6/10/2013
VERIFIED BY:	Michael Braverman	**DATE:**	7-Jun-13

CONESTOGA-ROVERS & ASSOCIATES

CONSOLIDATED UNDRAINED TRIAXIAL COMPRESSION TEST
FOR COHESIVE SOILS (ASTM D4767 - 11)

CLIENT:	Lake Erie Development Corporation	**LAB No.:**	WLA 280-17
PROJECT/ SITE:	LEEDCo Project Icebreaker / Cleveland, Ohio, USA	**PROJECT No.:**	82317

BH No.	**Boring BH-1**
Sample ID	**ST-8**
Depth, m	**17.7-18.3 (below sediments level)**
Sampling Date	**N/A**
Sample description	**clayey SILT, trace sand, trace gravel**

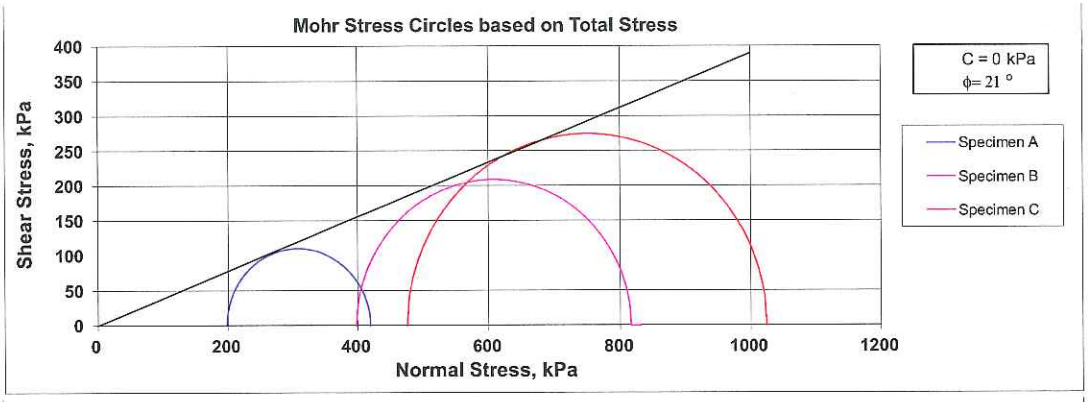

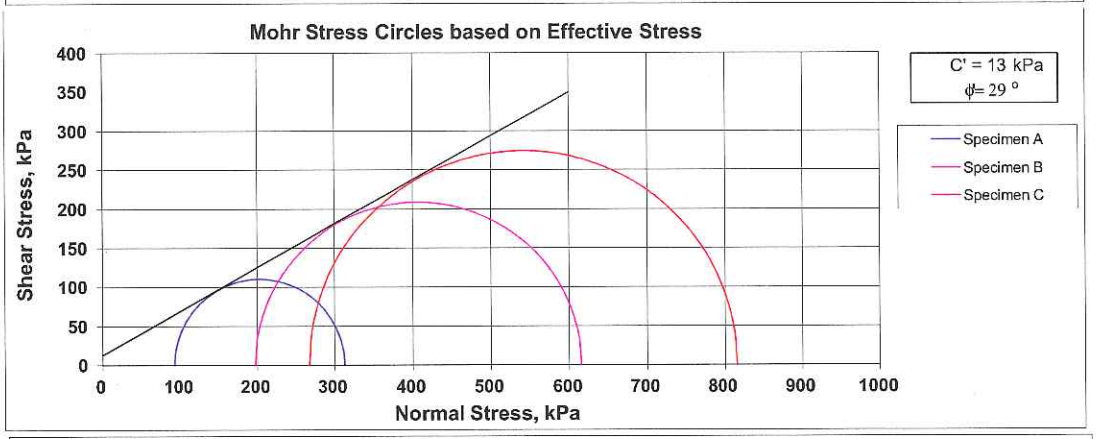

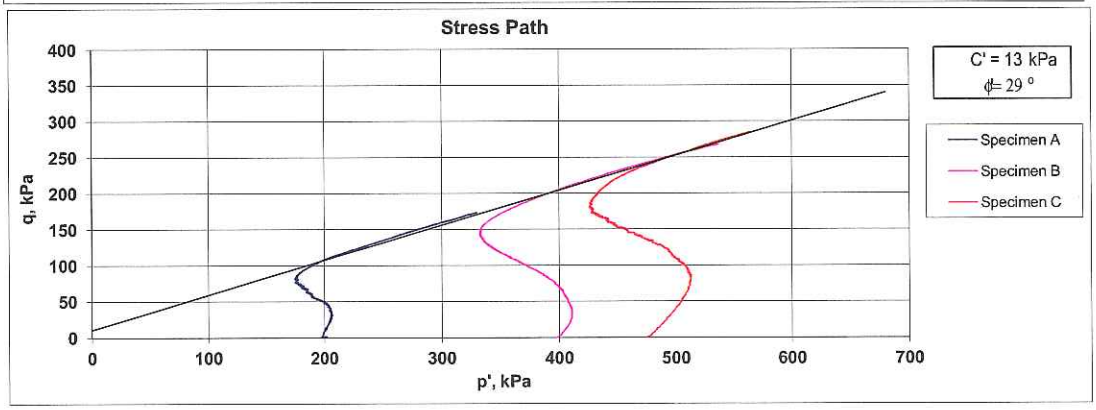

REMARKS:

PERFORMED BY:	Casey Adachi	**DATE:**	5/28/2013-6/10/2013
VERIFIED BY:	Michael Braverman	**DATE:**	7-Jun-13

FO-930.119a (On) / IA / 06-12

CONESTOGA-ROVERS & ASSOCIATES

ONE-DIMENSIONAL
CONSOLIDATION TEST (METRIC)
(ASTM D2435)

CLIENT:	Lake Erie Development Corporation	**PROJECT No:**	82317
PROJECT:	LEEDCo Icebreaker - Cleveland, Ohio, U.S.A.	**LAB No:**	WLA280-18

BOREHOLE No: Boring BH-1 SAMPLE No: ST-4 DEPTH (m): 11.6-12.2 (below top of sediments)

DESCRIPTION OF MATERIAL: clayey SILT, trace sand

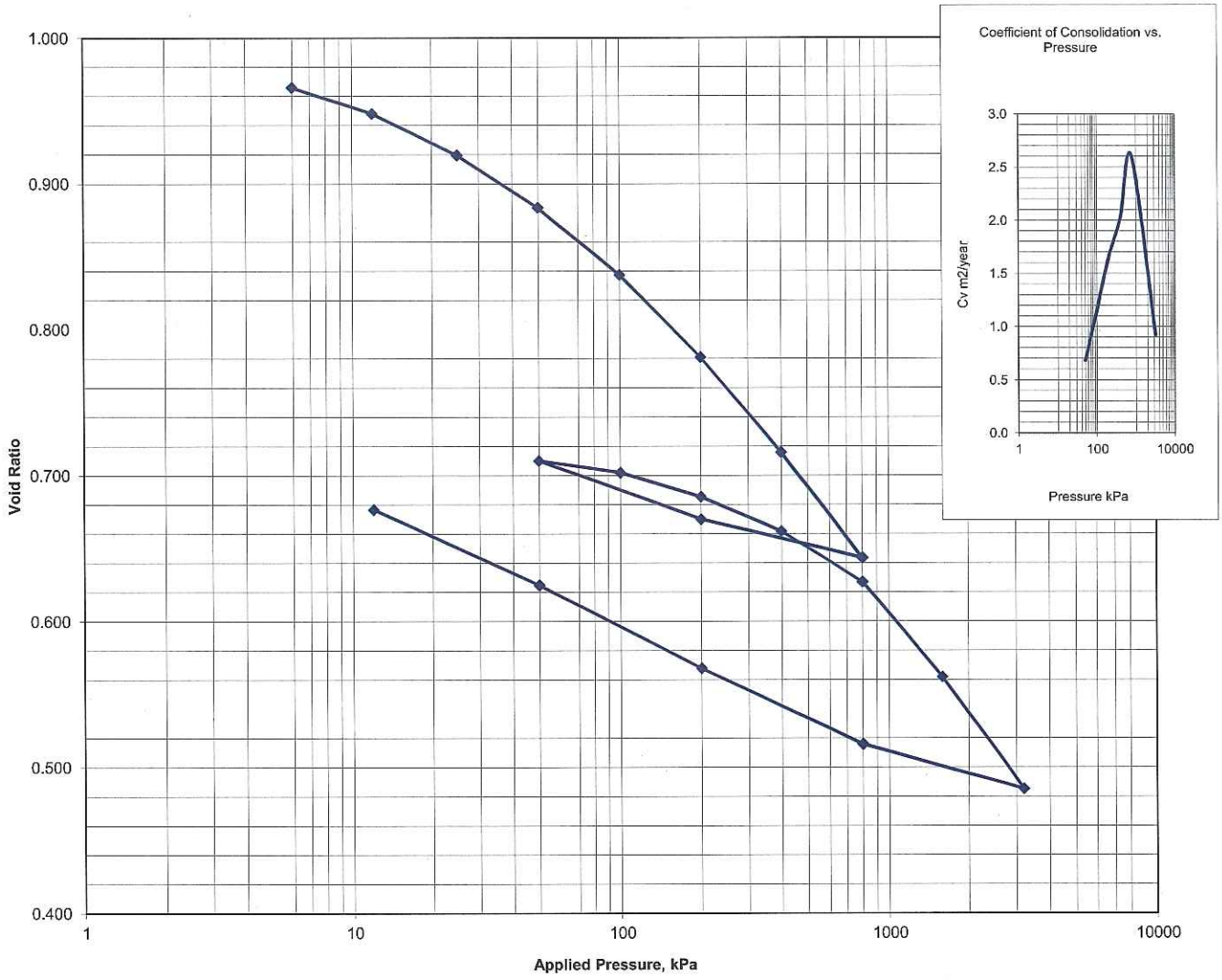

COMPRESSIBILITY PARAMETERS

σ'_p Preconsolidation pressure, kPa	70.0	e_0 Initial Void Ratio	1.002
σ'_0 Effective vertical pressure, kPa	102.0	e_f Final Void Ratio	0.677
σ'_p-σ'_o Overconsolidation, kPa	-32.0	Cc Compression Index	0.235
Overconsolidation ratio ("OCR")	0.69	C_R Recompression Index	0.067

Sample dry density, g/cm^3		Moisture content (W) %	
Initial state 1.348	Final state 1.462	Initial state 39.0	Final state 26.3

REMARKS:

PERFORMED BY: Casey Adachi **DATE:** 7-Jun-13

VERIFIED BY: Michael Braverman **DATE:** 10-Jun-13

CONESTOGA-ROVERS & ASSOCIATES

UNCONFINED COMPRESSIVE STRENGTH OF INTACT ROCK CORE SPECIMEN
ASTM D 2938, ASTM D 4543

CLIENT:	Lake Erie Energy Development Corp.	**PROJECT No.:**	82317
PROJECT:	LEEDCO - Project Icebreaker	**SAMPLE No.:**	RC-1 (WLA 280-22)
	Cleveland, Ohia, U.S.A	**DEPTH:**	98 ft - 100 ft
		SAMPLING DATE:	May 5 - 10, 2013

TESTING APPARATUS USED: Loading device no. 1 Caliper no.: 1

TECHNICAL DATA

Diameter :	60.28	60.33	(mm)
Length :	110		(mm)
Flatness :	<0.051	<0.051	(mm)
Straightness:			
Procedure A:	0.12	0.17	(mm)
Procedure B:			(mm)
Perpendicularity :	0.2	0.3	(°)
Moisture condition:	As received		
Rate of loading:	0.22		(MPa/min)
Type of failure:	3		

Unconfined compressive strength: 61.6 (MPa)

VIEW OF TEST SPECIMEN

MACROSCOPIC DESCRIPTION:

REMARKS: Rock core too fragile for cutting & grinding, a sulphur cap was used.

ANALYSED BY: D. Hegarty **DATE:** May 24, 2013

VERIFIED BY: Abdul Hafeez Khan, P.Eng. **DATE:** May 27, 2013

CONESTOGA-ROVERS & ASSOCIATES

UNCONFINED COMPRESSIVE STRENGTH OF INTACT ROCK CORE SPECIMEN
ASTM D 2938, ASTM D 4543

CLIENT:	Lake Erie Energy Development Corp.	**PROJECT No.:**	82317
PROJECT:	LEEDCO - Project Icebreaker	**SAMPLE No.:**	RC-3 (WLA 280-24)
	Cleveland, Ohia, U.S.A	**DEPTH:**	110 ft - 120 ft
		SAMPLING DATE:	May 5 - 10, 2013

TESTING APPARATUS USED: Loading device no. 1 Caliper no.: 1

TECHNICAL DATA

Diameter :	60.63	60.61	(mm)
Length :	78		(mm)
Flatness :	<0.051	<0.051	(mm)
Straightness:			
Procedure A:	0.05	0.02	(mm)
Procedure B:			(mm)
Perpendicularity :	0	0.1	(°)
Moisture condition:	As received		
Rate of loading:	0.22		(MPa/min)
Type of failure:	3		

Unconfined compressive strength: 67.7 (MPa)

VIEW OF TEST SPECIMEN

MACROSCOPIC DESCRIPTION:

REMARKS: Rock core too fragile for cutting & grinding, a sulphur cap was used.

ANALYSED BY: D.Hegarty **DATE:** May 24, 2013

VERIFIED BY: Abdul Hafeez Khan, P.Eng. **DATE:** May 27, 2013

CONESTOGA-ROVERS & ASSOCIATES

Bulk Density, Unit Weight, Specific Gravity and Absorption of Rock (ASTM C 97)

CLIENT: Lake Erie Development Corporation

LAB No.: WLA 280-22

PROJECT / SITE: LEEDCo Project Icebreaker - Cleveland, Ohio, USA

PROJECT No.: 82317

APPARATUS USED FOR TESTING: Oven No.: 1 Scale No.: 2

Lab No.	Sample I.D.	Depth	Sample Description	Saturated, Surface Dry (g)	Oven Dry (g)	In Water (g)	Wet Bulk Density (kg/m3)	Dry Bulk Density (kg/m3)	Wet Unit Weight (kN/m3)	Dry Unit Weight (kN/m3)	Specific Gravity	Absorbtion (%)
WLA280-22	RC-1	98 ft - 100 ft	Shale/Limestone - grey, strong, fresh to slightly weathered	546.6	543.3	317.5	2385.9	2371.5	23.4	23.3	2.4	0.61

REMARKS:

PERFORMED BY: D.Hegarty DATE: May 23, 2013

VERIFIED BY: Abdul Hafeez khan, P.Eng. DATE: May 31, 2013

CONESTOGA ROVERS & ASSOCIATES INC.
ATTN: ABDUL KHAN
2055 NIAGARA FALLS BOULEVARD
SUITE #3
NIAGARA FALLS NY

Date Received: 22-MAY-13
Report Date: 27-MAY-13 09:19 (MT)
Version: FINAL

Client Phone: 519-884-0510

Certificate of Analysis

Lab Work Order #: L1304999

Project P.O. #: 20-082317
Job Reference: 82317
C of C Numbers: 118380
Legal Site Desc:

Nancy Smith
Account Manager

[This report shall not be reproduced except in full without the written authority of the Laboratory.]

ADDRESS: 60 Northland Road, Unit 1, Waterloo, ON N2V 2B8 Canada | Phone: +1 519 886 6910 | Fax: +1 519 886 9047
ALS CANADA LTD Part of the ALS Group A Campbell Brothers Limited Company

Environmental www.alsglobal.com
RIGHT SOLUTIONS RIGHT PARTNER

ALS ENVIRONMENTAL ANALYTICAL REPORT

Sample Details/Parameters	Result	Qualifier*	D.L.	Units	Extracted	Analyzed	Batch
L1304999-1 SR-1 8.7'-9.0' Sampled By: CLIENT on 22-MAY-13 Matrix: SOIL							
Physical Tests							
pH	7.52		0.10	pH units	23-MAY-13	23-MAY-13	R2614370
L1304999-2 ST-3 33'-35 Sampled By: CLIENT on 22-MAY-13 Matrix: SOIL							
Physical Tests							
pH	7.76		0.10	pH units	23-MAY-13	23-MAY-13	R2614370
L1304999-3 SR-5 78'-88' Sampled By: CLIENT on 22-MAY-13 Matrix: SOIL							
Physical Tests							
pH	7.77		0.10	pH units	23-MAY-13	23-MAY-13	R2614370
L1304999-4 SR-6 89.4'-98' Sampled By: CLIENT on 22-MAY-13 Matrix: OTHER							
Physical Tests							
pH	7.36		0.10	pH units	23-MAY-13	23-MAY-13	R2614370

* Refer to Referenced Information for Qualifiers (if any) and Methodology.

Reference Information

Test Method References:

ALS Test Code	Matrix	Test Description	Method Reference**
PH-R511-WT	Soil	pH-O.Reg 153/04 (July 2011)	MOEE E3137A

A minimum 10g portion of the sample is extracted with 20mL of 0.01M calcium chloride solution by shaking for at least 30 minutes. The aqueous layer is separated from the soil and then analyzed using a pH meter and electrode.

Analysis conducted in accordance with the Protocol for Analytical Methods Used in the Assessment of Properties under Part XV.1 of the Environmental Protection Act (July 1, 2011).

** ALS test methods may incorporate modifications from specified reference methods to improve performance.

The last two letters of the above test code(s) indicate the laboratory that performed analytical analysis for that test. Refer to the list below:

Laboratory Definition Code	Laboratory Location
WT	ALS ENVIRONMENTAL - WATERLOO, ONTARIO, CANADA

Chain of Custody Numbers:

118380

GLOSSARY OF REPORT TERMS

Surrogates are compounds that are similar in behaviour to target analyte(s), but that do not normally occur in environmental samples. For applicable tests, surrogates are added to samples prior to analysis as a check on recovery. In reports that display the D.L. column, laboratory objectives for surrogates are listed there.
mg/kg - milligrams per kilogram based on dry weight of sample
mg/kg wwt - milligrams per kilogram based on wet weight of sample
mg/kg lwt - milligrams per kilogram based on lipid weight of sample
mg/L - unit of concentration based on volume, parts per million.
< - Less than.
D.L. - The reporting limit.
N/A - Result not available. Refer to qualifier code and definition for explanation.

Test results reported relate only to the samples as received by the laboratory.
UNLESS OTHERWISE STATED, ALL SAMPLES WERE RECEIVED IN ACCEPTABLE CONDITION.
Analytical results in unsigned test reports with the DRAFT watermark are subject to change, pending final QC review.

Quality Control Report

Workorder: L1304999 Report Date: 27-MAY-13

Client: CONESTOGA ROVERS & ASSOCIATES INC.
2055 NIAGARA FALLS BOULEVARD SUITE #3
NIAGARA FALLS NY 14304

Contact: ABDUL KHAN

Test	Matrix	Reference	Result	Qualifier	Units	RPD	Limit	Analyzed
PH-R511-WT	Soil							
Batch R2614370								
WG1674217-1 DUP		**L1304807-1**						
pH		8.36	8.46	J	pH units	0.10	0.3	23-MAY-13
WG1674535-1 LCS								
pH			7.04		pH units		6.7-7.3	23-MAY-13

Quality Control Report

Workorder: L1304999 Report Date: 27-MAY-13

Client: CONESTOGA ROVERS & ASSOCIATES INC.
2055 NIAGARA FALLS BOULEVARD SUITE #3
NIAGARA FALLS NY 14304

Contact: ABDUL KHAN

Legend:

Limit	ALS Control Limit (Data Quality Objectives)
DUP	Duplicate
RPD	Relative Percent Difference
N/A	Not Available
LCS	Laboratory Control Sample
SRM	Standard Reference Material
MS	Matrix Spike
MSD	Matrix Spike Duplicate
ADE	Average Desorption Efficiency
MB	Method Blank
IRM	Internal Reference Material
CRM	Certified Reference Material
CCV	Continuing Calibration Verification
CVS	Calibration Verification Standard
LCSD	Laboratory Control Sample Duplicate

Sample Parameter Qualifier Definitions:

Qualifier	Description
J	Duplicate results and limits are expressed in terms of absolute difference.

Hold Time Exceedances:

All test results reported with this submission were conducted within ALS recommended hold times.

ALS recommended hold times may vary by province. They are assigned to meet known provincial and/or federal government requirements. In the absence of regulatory hold times, ALS establishes recommendations based on guidelines published by the US EPA, APHA Standard Methods, or Environment Canada (where available). For more information, please contact ALS.

The ALS Quality Control Report is provided to ALS clients upon request. ALS includes comprehensive QC checks with every analysis to ensure our high standards of quality are met. Each QC result has a known or expected target value, which is compared against pre-determined data quality objectives to provide confidence in the accuracy of associated test results.

Please note that this report may contain QC results from anonymous Sample Duplicates and Matrix Spikes that do not originate from this Work Order.

C of C # 00000

CHAIN OF CUSTODY / ANALYTICAL SERVICES REQUEST FORM

Page 1 of 1

60 NORTHLAND ROAD, UNIT 1
WATERLOO, ON N2V 2B8
Phone: (519) 886-6910
Fax: (519) 886-9047
Toll Free: 1-800-668-9878

ALS environmental

Note: all TAT Quoted material is in business days which exclude statutory holidays and weekends. TAT samples received past 3:00 pm or Saturday/Sunday begin the next day.

Specify date required	Service requested		
	5 day (regular)	X	2 day TAT (50%)
	3-4 day (25%)		Next day TAT (100%)
			Same day TAT (200%)

PLEASE INDICATE FILTERED, PRESERVED OR BOTH <----- (F, P, F/P)

COMPANY NAME	CRA
OFFICE	Waterloo
PROJECT MANAGER	Abdul Khan
PROJECT #	082317
PHONE	FAX
ACCOUNT #	
QUOTATION #	PO #

CRITERIA — Criteria on report YES___ NO___

Reg 153/04 ☐ Reg 511/09 ☐

Table 1 2 3 4 5 6 7 8 9

TCLP _____ MISA _____ PWQO _____

ODWS _____ OTHER _____

REPORT FORMAT/DISTRIBUTION

EMAIL _____ FAX _____ BOTH _____

SELECT: PDF _____ DIGITAL _____ BOTH _____

EMAIL 1 _____

EMAIL 2 _____

ANALYSIS REQUEST

SAMPLE DESCRIPTION TO APPEAR ON REPORT	NUMBER OF CONTAINERS	pH
SR-1 8.7'-9.0'	1	X
ST-3 33'-35'	1	X
SR-5 78'-88'	1	X
SR-6 89.4'-98'	1	X

SAMPLING INFORMATION

Sample Date/Time: Date (dd-mm-yy)	Time (24hr) (hh:mm)	TYPE: COMP	GRAB	MATRIX: WATER	SOIL	OTHER	COMMENTS	LAB ID
—	—				X			1
—	—				X			2
—	—				X			3
—	—					X		4

L1304999-COFC

SUBMISSION #:	L1304999
ENTERED BY	oy
DATE/TIME ENTERED:	22/5/13 17:58
BIN #:	819

SPECIAL INSTRUCTIONS/COMMENTS

SR-6 is a rock sample

THE QUESTIONS BELOW MUST BE ANSWERED FORWATER SAMPLES (CHECK Yes OR No)

Are any samples taken from a regulated DW System? Yes ☐ No ☐

If yes, an authorized drinking water COC MUST be used for this submission. Is the water sampled intended to be potable for human consumption? Yes ☐ No ☐

SAMPLE CONDITION

FROZEN ☐
COLD ☐
COOLING INITIATED ☐
AMBIENT ☑

MEAN TEMP: 25.2

OBSERVATIONS Yes ☐ No ☐ If yes add SIF

INIT: KS

SAMPLED BY:	DATE & TIME	RECEIVED BY:	DATE & TIME
RELINQUISHED BY: D. Hegarty	DATE & TIME 5/22/13	RECEIVED AT LAB BY: KSm 16:08	DATE & TIME MAY 22/13

Notes

1. Quote number must be provided to ensure proper pricing
2. TAT may vary dependent on complexity of analysis and lab workload at time of submission. Please contact the lab to confirm TATs.
3. Any known or suspected hazards relating to a sample must be noted on the chain of custody in comments section.

APPENDIX F

PHOTOGRAPHIC LOG

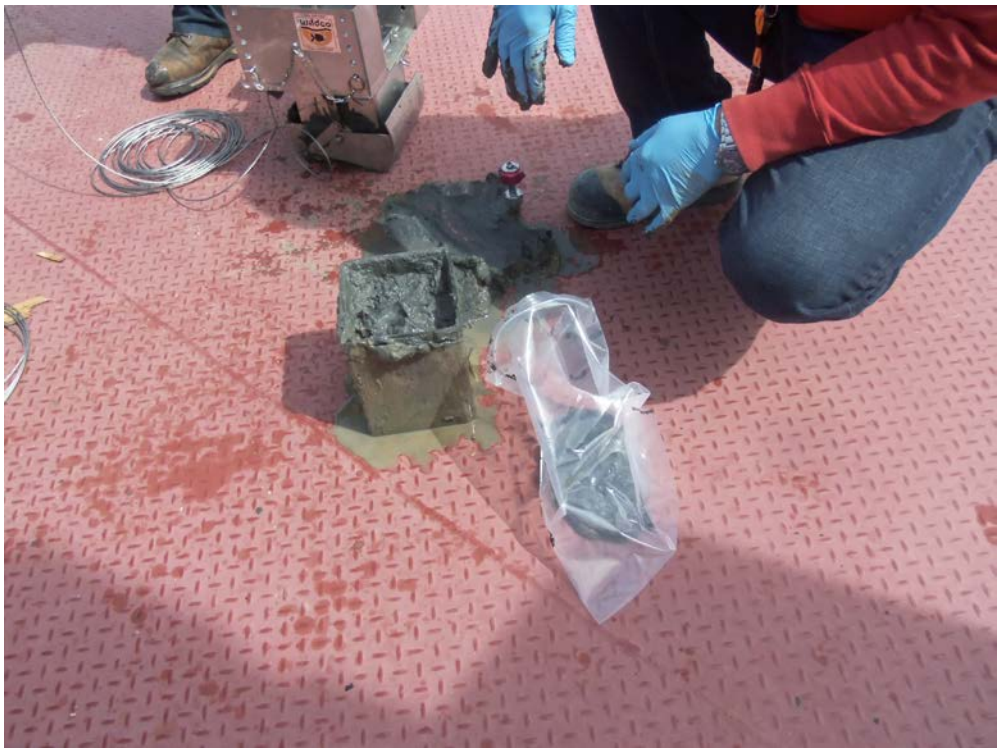

Photo #1 – Mudline sample at CPT-1

Photo #2 – Mudline sample at CPT-2

SITE PHOTOGRAPHS

Photo #3 – Mudline sample at CPT-3A

Photo #4 – Mudline sample at BH-1

SITE PHOTOGRAPHS

Photo #5 – Sonic core samples CPT-1: 0 to 8.8 feet below mudline

Photo #6 – Sonic core samples CPT-1: 8.8 to 13.8 feet below mudline

SITE PHOTOGRAPHS

Photo #7 – Sonic core samples CPT-2: 4.5 to 19.5 feet below mudline

Photo #8 – Sonic core samples CPT-2: 19.5 to 24.5 feet below mudline

SITE PHOTOGRAPHS

Photo #9 – BH-1 sonic sample 0 to 10 feet below mudline

Photo #10 – BH-1 sonic sample 10 to 20 feet below mudline

SITE PHOTOGRAPHS

Photo #11 – BH-1 sonic sample 68 to 78 feet below mudline

Photo #12 – BH-1 sonic sample 78 to 88 feet below mudline

SITE PHOTOGRAPHS

Photo #13 – BH-1 sonic sample 88 to 98 feet below mudline

Photo #14 – BH-1 core samples 98 to 110 feet below mudline

SITE PHOTOGRAPHS

Photo #15 – BH-1 core samples 110 to 120 feet below mudline

Photo #16 – CPT-3A sonic sample 0 to 8 feet below mudline

SITE PHOTOGRAPHS

Photo #17 – CPT-3A sonic sample 8 to 18 feet below mudline

SITE PHOTOGRAPHS

Appendix 5: National Renewable Energy Laboratory Reports

Baseline Levelized Cost of Energy

See attached report

Optimized Rotor Design

See attached report

Wind Farm Plant Layout

See attached report

Operations and Maintenance

See attached report

Updated Levelized Cost of Energy

See attached report

Baseline Cost of Energy Memo

Shallow Water Offshore Wind Optimization for the Great Lakes
FOA 415 Topic Area 2

Table of Contents

Overview 1
Baseline Summary and Cost of Energy Estimate 2
- Operating Parameters 3
- Turbine Capital Costs 4
- Balance of System Costs 5
- Soft Costs 7
- Annual Operating Expenses 7
- Baseline LCOE Estimate 8

Appendix A: Summary of LCOE Assumptions 9
References 11

Overview

The following document summarizes the Baseline Project Scenario and associated levelized cost of energy (LCOE) estimate for the "Shallow Water Offshore Wind Optimization for the Great Lakes" project.

The project is a study of a holistic offshore wind system that will be optimized for shallow water conditions found in the Great Lakes. Innovations will be targeted to deliver at least 25% COE reductions for large-scale offshore wind installations, relative to this baseline LCOE estimate reflecting shallow water installations today. The analysis of both the baseline and hypothetical configurations will be customized to the Ohio waters of Lake Erie, which has characteristics representative of the shallow areas of the Great Lakes including ice loading, low hydrodynamic loading, and no tropical storms.

Project work will assess specific innovations required for projects located in the Great Lakes including, Balance of System (BOS) innovations, an optimized rotor design for the lower wind resource, an optimized wind plant layout and innovative O&M strategies that address freshwater ice conditions.

Baseline Summary and Cost of Energy Estimate

The project team will benchmark the cost and performance of hypothetical innovations against baseline technology representing a hypothetical project installed in Lake Erie today. As shown in Figure 1, to represent the baseline project and estimate cost reductions from hypothetical innovations, NREL used its Wind Turbine Design Cost and Scaling model (Fingersh et al., 2006, Maples et al., 2010), its Offshore Wind Balance of System (BOS) model (currently under development), and the ECN O&M tool (Rademakers 2009). Model estimates are then validated against market data and partner experience and adjusted as needed to reflect the unique characteristics of this specific project. The cost of energy was calculated using the LCOE formula and the financial parameters defined in FOA 415.

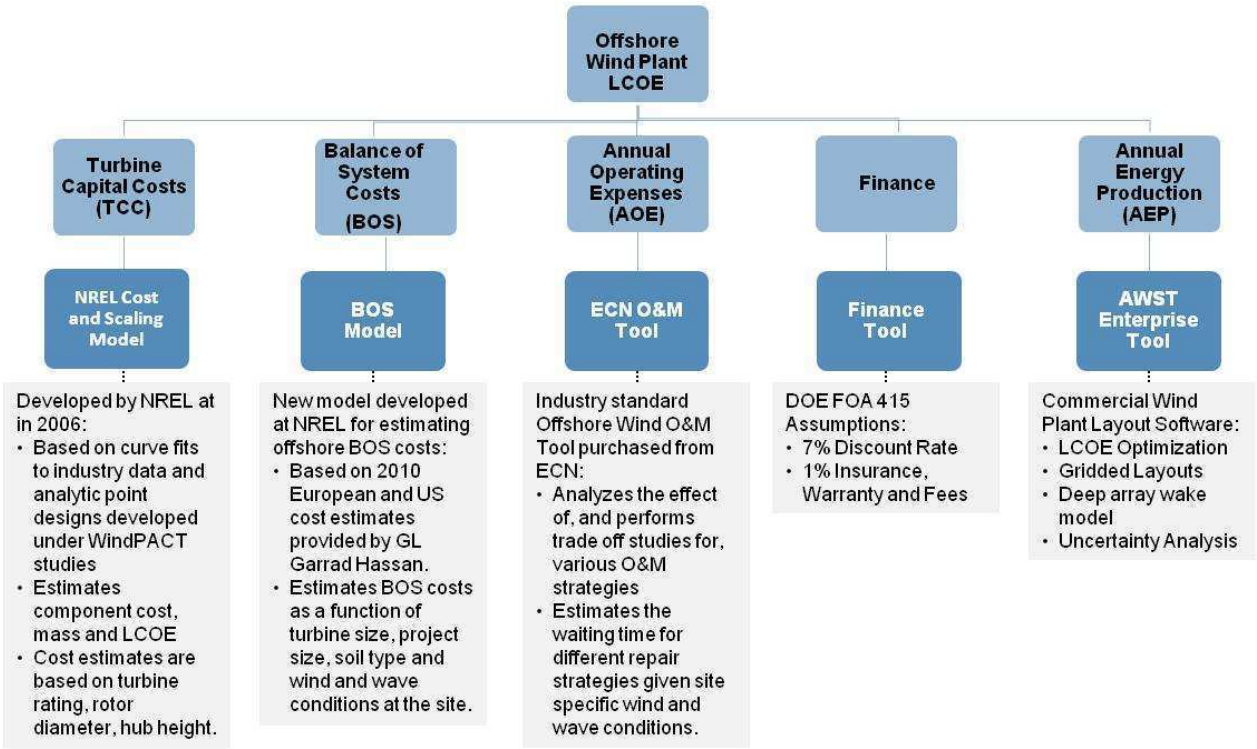

Figure 1. Summary of methodology used to estimate LCOE for the baseline project.

Operating Parameters

Table 1 summarizes the operating parameters for the baseline wind farm, which consists of 100 5MW turbines located in Lake Erie, at a water depth of 20 m, and 21.6 km distance to the point of interconnection.

Power production estimates were calculated using the NREL Cost and Scaling model and the published power curve of the NREL Offshore Reference Turbine(Jonkman 2009). We used the AWST report for wind resource estimates (Estimation of the Wind Resource and Energy Production of the Cleveland Crib Offshore Wind Project, April 2011). We also used this report to estimate losses, with the exception of wake losses, which we assumed the spacing and wake losses from Horns Rev (10%) as the baseline (Hansen 2012). Losses for the baseline scenario are estimated at 16.9% and include:

- Wake effect – 10%
- Electrical – 4%
- Environmental – 3.8% (Includes blade ice, blade degradation, temperature shutdown and lightning)

Table 1: Operating parameters for baseline turbine and wind farm

Category	Baseline 500 MW Farm
Project Location	42° 4'54.54"N 80°52'45.54"W
Wind Plant Rating (MW)	500
# of Turbines	100
System Design Life (years)	20
Turbine Rating (kW)	5000
Rotor Diameter (m)	126
Hub Height (m)	90
Drivetrain Type	Geared
Foundation Type	Monopile
Distance to Interconnect (km) - Perry	21.6
Distance to O&M Port (km) - Ashtabula	21
Distance to Staging Port (Turbine) (km) - Cleveland	97
Distance to Staging Port (Foundation) (km) - Lorain	130
Water Depth (m)	22
Wind Speed at HH (m/s)	8.3
Weibull K	2.09
Wind Shear	0.11
Air Density (kg/m^3)	1.225
Losses (%)	16.9
Availability (%)	91
Array Spacing	7d (E-W and N-S)

To estimate the impacts of wind, wave and ice on installation and maintenance costs, a time-series history of wind speed, wave height and ice coverage for the project area was generated by combining data from a wave hindcast model with ice data from observations. The history covers the period from December 1988 through May of 2002 (including 14 winter seasons).

Hourly wind and wave data came from the US Army Corps of Engineers Wave Information Studies (WIS). The selected point was WIS92070, located at 41.56N, 81.76W, which is located between the Cleveland Crib and the lease area. Daily ice coverage data (which may be interpolated between longer observation intervals) were obtained from NOAA's Great Lakes Ice Atlas using the National Ice Center records from the 1989 to 2002 winter seasons. Each daily ice observation was duplicated 24 times to match the hourly wind/wave data. A single ice coverage number was calculated from 7 Ice Atlas grid points: 4 points within the lease area and 3 more points leading southeast towards Cleveland. Ice coverage was computed as the maximum of these 7 points, since the hypothetical wind farm would not be accessible to a vessel if any of the points was covered with ice. Figure 2 summarizes the location of the modeled data and ice collection points in relation to the project lease area.

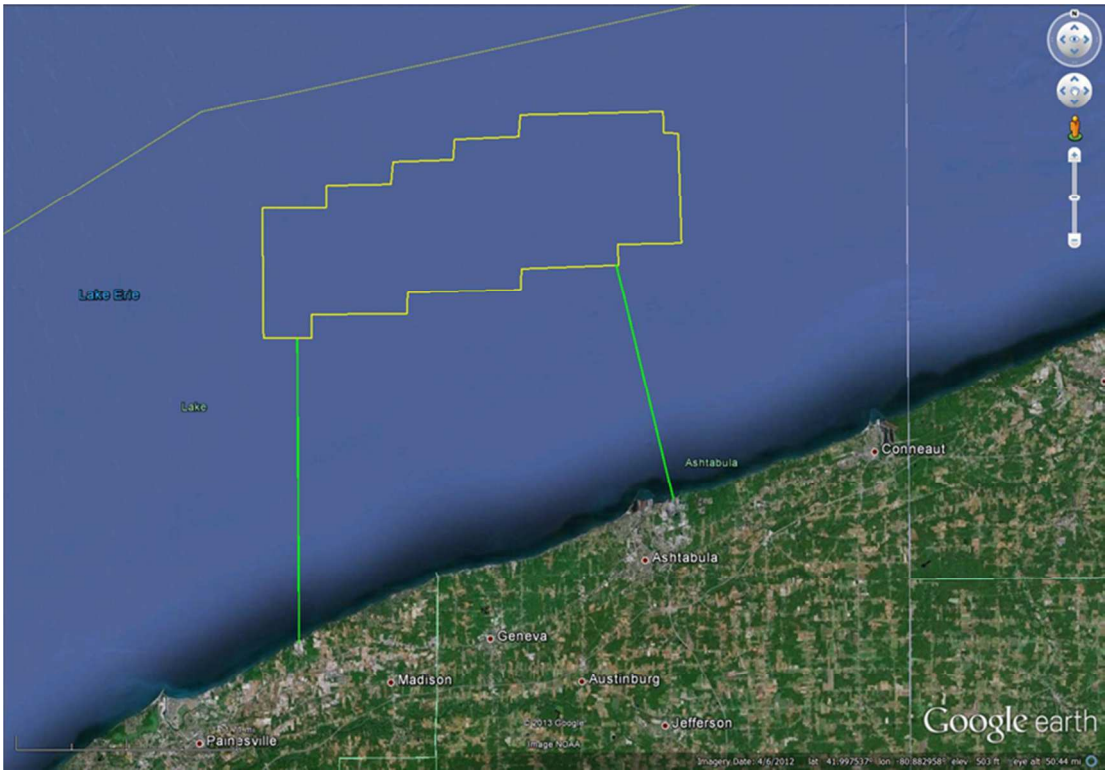

Figure 2. Summary of methodology used to estimate LCOE for the baseline project.

Turbine Capital Costs

The NREL offshore 5 MW wind turbine was selected as the offshore baseline turbine configuration because of its wide use internationally as a reference turbine (Jonkman 2009). Turbine subcomponent cost estimates were obtained using the NREL Cost and Scaling model (Fingersh et al., 2006; Maples et al., 2010) along with turbine design parameters from the 5MW Reference Turbine (Table 2). This process estimates Turbine Capital Cost (TCC) for the 5MW reference turbine at 2079 $/kW, which corresponds well to recent cost data collected in NREL's Offshore Wind Project Database (2012).

Table 2: Summary of Baseline Turbine Capital Costs

Component	Baseline 500 MW Farm ($/kW)
Rotor	473
Drive train, nacelle	1326
Controls, Safety System and CBM	22
Tower	258
TOTAL	**2079**

Balance of System Costs

The turbines will be situated on monopiles and installed component by component with the tower being installed in two lifts. Turbine installation will be carried out by a self-propelled jack-up vessel with a supporting cast of barges, tugs, and crew transport vessels. Given that most European jack up vessels

and turbine installation vessels (TIVs) will be too wide to navigate the St Lawrence Sea Way, the Great Lakes will likely need a Purpose Built TIV that also has the capability of installing foundations. A day rate of $212,000 was assumed for a new build TIV and may be updated at a later date as more information is gathered (Douglas Westwood 2013).

Installation times were estimated assuming no installation activity during ice season, which is estimated at 60.5 days per year (juwi 2009). With the total required installation time estimated just under 400 working days, the installation could be broken into two installation seasons; therefore this constraint would require one additional mobilization fee to re-deploy the installation vessels. This re-deployment of the installation vessels would be necessary because of the downtime associated with the ice season between when the foundations are installed and when the turbines are installed.

Turbines will be spaced seven rotor diameters apart in a simple grid. Array cables consist of a combination of 500 kcm and 1250 kcm cable sizes , all at 33kV, in a radial layout connecting to an offshore transformer substation. A summary of balance of system costs is provided in Table 3, below.

Table 3: Summary of Baseline BOS Costs

Category	Baseline 500 MW Farm ($/kW)
Development	291
Foundation	661
Primary Steel	*338*
Transition Piece	*228*
Secondary Steel	*95*
Ports and Staging	23
Storage Fees	*7*
Entrance/Exit/Docking Fees	*6*
Craneage	*11*
Turbine and Foundation Installation	1,160
Installation Vessels (Turbine & Foundation)	*454*
Transportation Vessels	*228*
Support Vessels	*86*
Electrical Installation Vessels	*392*
Electrical Infrastructure	568
Array Cable	*187*
Offshore Substation & Support Structure	*164*
Export Cable	*176*
Land-based Substation & Interconnect	*41*
TOTAL	**2703**

The electrical infrastructure costs include the construction of a new land-based substation and interconnection point. The land-based substation is assumed to tie into a 220kV line and is capable of handling 500MW.

Soft Costs

Soft costs include non-construction costs incurred before project commissioning, and are mainly related to the cost of financial vehicles, including:

- Insurance – insurance to protect against damage to component, accidents and liability during construction. Estimated at 1% of total ICC (Tegen 2012).
- Decommissioning – assumed reverse of installation procedure, but quicker and at lower costs (BVG 2012)
- Contingency – assumed 10% of total ICC (Tegen 2012).

Table 4 includes a summary of the soft costs for the baseline scenario.

Table 4: Summary of Baseline Soft Costs

Category	Baseline 500 MW Farm ($/kW)
Insurance	52
Decommissioning	436
Contingency	426
TOTAL	**914**

Annual Operating Expenses

O&M costs are highly dependent on the failure frequency of turbine and BOS components, therefore a set of generic failure frequencies was established for use in the baseline scenario, derived from the results of the Reliawind project (Wilkinson et al., 2010). Additionally, it was assumed that the following methods, costs and equipment are the most likely option for the transfer of personnel and for making repairs:

- Workboat access vessel (transferring technicians and transporting small components)
- Purpose Built TIV (transporting and hoisting large components)
- Cable layer (replacing cables)
- Diving support vessel (for underwater inspections and repairs)

For the baseline scenario, we assumed that when ice coverage exceeds 10%, the site cannot be accessed for repairs. We also assumed that for equipment with a long mobilization time the situation might occur that, on average, more than 1 failure occurs during the mobilization time of the equipment. In reality these repairs will be clustered and thus the average logistic time and mobilization/demobilization costs per repair will be lower. This clustering of O&M costs has been modeled in the baseline.

Results of the baseline O&M scenario are presented in Table 5, below. All costs for corrective and preventative maintenance include spare parts and the vessels, labor and equipment to perform maintenance/repairs.

Table 5: Summary of Baseline Annual Operating Expenses

Category	Baseline 500 MW Farm ($/kW/year)
Corrective Maintenance	130
Preventative Maintenance	9
Fixed Yearly Costs	10
Lease Fees	6
Availability	91%
Total	**155**

Baseline LCOE Estimate

The baseline scenario has been calculated using the following formula, as provided in Appendix E of FOA 415:

$$\text{LCOE} = ((DR+IWF) \times (TCC + BOS) + O\&M)) / AEPnet$$

where:

LCOE	Levelized Cost of Energy ($/kWh) (constant dollars)
DR	Discount Rate (1/yr)
IWF	Insurance, Warranty and Fees (1/yr)
TCC	Turbine Capital Cost ($)
BOS	Balance of System Capital Cost ($)
AOE	Annual Operating Expenses ($/yr)
AEPnet	Net Annual Energy Production (kWh/yr)

A summary of the baseline LCOE is provided in Table 6, below.

Table 6: LCOE Estimate for Baseline Project

Category	Baseline 500 MW Farm
Net Annual Energy Production (MWh)	1,599,630
Turbine Capital Cost ($/kW)	2079
Balance of Station Cost ($/kW)	2703
Soft Costs ($/kW)	914
Annual Operating Expenses ($/kW/yr)	155
Discount Rate	7%
Insurance, Warranty and Fees (IWF)	1%
Installed Capital Cost (ICC) ($/kW)	**5696**
Baseline LCOE ($/kWh)	**$0.1715**

Estimated baseline Installed Capital Costs (ICC) using this approach are slightly higher than market data collected for NREL's Offshore Wind Project Database [1](2012) and the Offshore Wind Cost Reduction Pathways Report (BVG 2012) recently published from the Crown Estates (Table 7). Potential reasons for this discrepancy include:

- The BOS model is under development and may currently underestimate electrical infrastructure costs.
- Monopile cost estimates are currently independent of soil conditions and will be updated to reflect the soils conditions found in Lake Erie.
- Vessel day rate assumptions for a new build TIV based in the Great Lakes came from one source and require further investigation.

Adjustments may be made to this baseline estimate for the final report based on better information.

Table 7. Comparison of estimated baseline capital costs costs

	Crown Estate	Freshwater FOA 415	NREL Offshore Wind Project Database(Average)
TCC Total ($/kW)	1613	2079	1789
BOS Total ($/kW)	2467*	2703	2918
Soft Cost Total ($/kW)	1073	914	730
Total ICC ($/kW)	**5153***	**5696**	**5600**
Distance to Shore	40km	21.6 km	20km
Water Depth	35m	20m	15m
Foundation Type	Jacket	Monopile	Monopile
Turbine Size	4 - 6MW	5MW	3.6 MW
Plant Size	500MW	500MW	500MW

** does not include offshore substation and export cable cost - estimated at ~$1000/kW*

[1] The NREL offshore wind project database (2012) contains capital cost data for 98% of the total installed capacity as well as estimates for 31 projects under development in Europe (~9,100 MW).

Appendix A: Summary of LCOE Assumptions

Type	Category	Notes
Turbine Capital Costs	Rotor	Turbine capital costs include rotor, the hub assembly incorporating blade bearings and pitch system, the drive train and nacelle, controls and condition based monitoring equipment and the tower. It also includes delivery of the components to the staging port.
	Drive Train/nacelle	
	Controls and CBM	
	Tower	
Balance of System Costs	Development	Includes project management costs up to commissioning, environmental surveys, geophysical and geotechnical surveys, meteorological tower, and pre FEED and FEED studies.
	Foundation	Includes all foundation material and fabrication costs for the foundation, transition piece and any secondary steel. It also includes delivery of the components to the staging port. It excludes warranty costs.
	Port and Staging	Includes cost of leasing lay down area, use of port cranes and docking fees.
	Turbine Installation	Includes commissioning.
	Substructure Installation	Includes all costs associated with transporting the foundation from the staging port to the site and installation operations.
	Vessels	Included installation costs for foundation, turbines and all electrical infrastructure.
	Electrical Infrastructure	Array cable includes a mix of 500 kcm and 1250 kcm cable sizes at 33 kV. Includes offshore substation and foundation costs. Export cable consists of two runs of 220kV – 1250KCM cable. Includes land based components and installation.
Soft Costs	Insurance	Includes construction phase insurance from the start of construction through commissioning of the turbine. Assumed 1% of total ICC.
	Decommissioning	Assumes reverse of installation activity with reduced time and costs (BVG 2012)
	Contingency	Assumed 10% of total ICC.
TOTAL Annual Operating Expenses		Annual operating expenses consist of preventative maintenance costs, corrective maintenance costs and all fixed costs. All costs include spare parts and the vessels, labor and equipment to perform maintenance/repairs. Because annual operating expenses are tax deductible, the final value was multiplied by 60%
Discount Rate, Operating Phase Insurance, Warranty and Other Fees		The discount rate (DR) reflects finance charges, debt or equity repayment, construction financing, and the cost of capital. It requires assumptions regarding inflation rates and tax protection benefits among other factors. In addition to the discount rate, there are additional finance charges due to insurance, warranty and other fees (IWF) over the life of a project. For the purposes of these cost comparisons, the operating phase insurance, warranty and fees are estimated at 1%.

References

Douglas-Westwood. (2013). "Assessment of Vessel Requirement for US offshore Wind Sector." Draft Report for DOE Offshore Wind Removing Market Barriers FOA.

Fingersh, L.; Hand, M.; Laxson, A. (2006). "Wind Turbine Design Cost and Scaling Model." NREL/TP-500-40566. Golden, CO: National Renewable Energy Laboratory.

Hansen, K.S., Barthelmie, R.J., Jensen, L.E. and Sommer. A. (2012). The impact of turbulence intensity and atmospheric stability on power deficits due to wind turbine wakes at Horns Rev wind farm, Wind Energy, 15(1), 183–196. DOI: 10.1002/we.512

Jonkman, J.; Butterfield, S.; Musial, W.; Scott, G. (2009). "Definition of a 5-MW Reference Wind Turbine for Offshore System Development." NREL/TP-500-38060. Golden, CO: National Renewable Energy Laboratory.

Maples, B.; Hand, M.; Musial, W. (2010). "Comparative Assessment of Direct Drive High Temperature Superconducting Generators in Multi-Megawatt Class Wind Turbines." 40 pp.; NREL Report No. TP-5000-49086.

NREL. (2012). *Internal Offshore Wind Project Database*. The National Renewable Energy Laboratory. Unpublished.

T.S.Obdam, T.J.J.vander Zee. (2011). "ECN O&M Tool Case Study for a Far Offshore Wind Farm"; Energy Centre of the Netherlands

Wilkinson, M. et al. (2010). "Methodology of the Reliawind Reliability Field Study." European Wind Energy Conference, Warszaw.

Rotor Optimization for the Great Lakes Wind Regime

Shallow Water Offshore Wind Optimization for the Great Lakes
FOA 415 Topic Area 2

Table of Contents

Table of Contents 1

Overview 2

1. Rotor and Hub Height LCOE Optimization 2

2. Rotor Aerodynamic Optimization 5

Conclusions 9

Overview

The following document is intended to serve as a summary of the assumptions and approach NREL has taken to develop an optimized rotor design and hub height for the Great Lakes wind regime. The first section of this report describes the assumptions, approach, and results from the rotor and hub height LCOE optimization. This analysis fed into the second section of this report which describes the approach and results from the rotor aerodynamic optimization.

1. Rotor and Hub Height LCOE Optimization

Optimizing a turbine rotor and hub height for a particular wind site requires consideration of the relationships between energy capture and components costs. When performing this optimization, it is important to consider the effect that modifying the rotor design or hub height has on other components that comprise the wind turbine system. For example, if one were to only look at how blade cost increases with increasing rotor diameter, the cost impacts to the drivetrain, tower, and substructure due to increased turbine loads would be overlooked and a sub-optimal rotor could be selected. Figure 1 demonstrates some of the design and cost tradeoffs that need to be considered, given the assumed height constraints for the site.

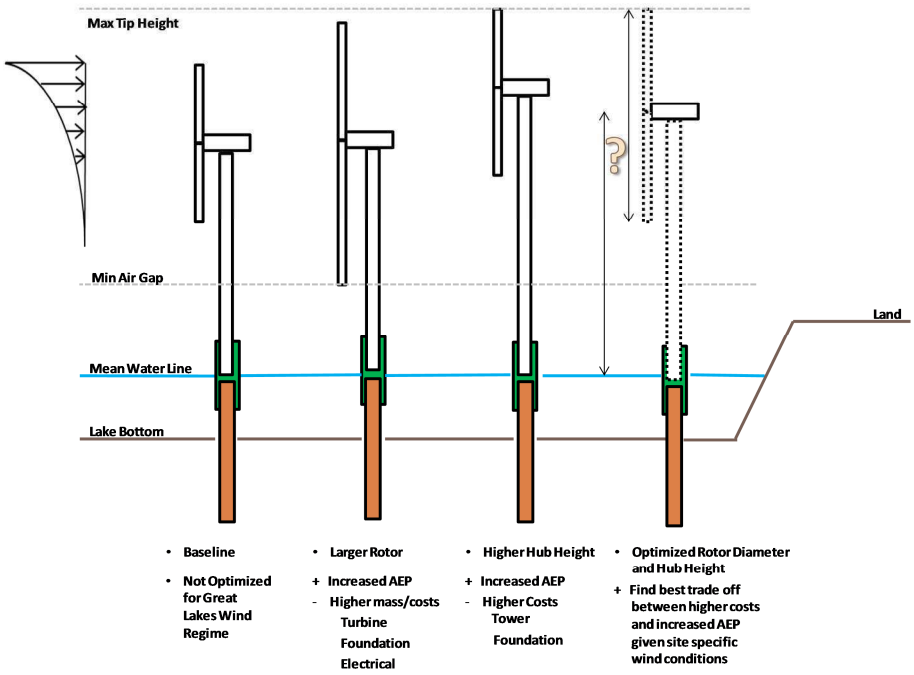

Figure 1. Rotor Optimization considerations

Approach

Using measured wind resource data at the CRIB and soil parameters provided by COWI, NREL has completed a rotor and hub height optimization analysis using a subset of its offshore wind plant cost modeling tools, including the Wind Turbine Design Cost and Scaling model and the Offshore Wind Balance of Station (BOS) model.

The optimization was conducted using the following approach:

- Gather and define all pertinent wind plant input parameters and restrictions listed in Table 1.
- Link the NREL Cost and Scaling Model with the Offshore Balance of Station Model in order optimize on a system level, taking into account the system level cost impacts of changes in rotor diameter and hub height.
- Run an optimization surrounding the linked models to achieve the lowest wind plant LCOE.

Assumptions

For the preliminary rotor and hub height LCOE optimization calculations described herein, we optimized a rotor to minimize LCOE by varying only hub height and rotor diameter, within the baseline assumptions and constraints given in Table 1.

Table 1: Rotor baseline and optimization assumptions

Category	Baseline 500 MW Farm
Wind Plant Rating (MW)	500
# of Turbines	100
System Design Life (years)	20
Turbine Rating (kW)	5000
Turbine power coefficient	.50
Blade Tip Speed (m/s)	80
Rotor Diameter (m)	126
Hub Height (m)	90
Drivetrain Type	Geared
Foundation Type	Monopile
Distance to Interconnect (km) - Perry	21.6
Distance to O&M Port (km) - Ashtabula	21
Distance to Staging Port (Turbine) (km) - Cleveland	97
Distance to Staging Port (Foundation) (km) - Lorain	130
Water Depth (m)	22
Wind Speed at HH (m/s)	8.3
Weibull K	2.09*
Wind Shear	0.11
Air Density (kg/m^3)	1.225

Losses (%)	16.9
Availability (%)	91
Minimum Air Gap (m)	22
Maximum tip height (m)	185[1]

** Wind resource data was measured at the Cleveland Crib Monitoring Mast between 2005 and 2009.*

NREL referenced the "Great Lakes Wind Energy Center Feasibility Study", completed by juwi in 2009 for all site assumptions. It is important to note the measured shear exponent at the crib (.057) and expected shear values for offshore locations (0.10-0.11) vary significantly. In order to determine the sensitivity of the optimization to wind shear, the initial analysis was run using both values. Conversations with industry have indicated a low level of confidence in the measured crib shear exponent (possibly from sensor error); therefore final optimization was computed using a wind shear value of 0.11, which is typical for offshore applications. All other turbine parameters, including power coefficient, thrust coefficient, and blade-tip-speed were held constant.

Rotor and Hub Height Optimization Results

Due to the low wind speed at the intended deployment site, the optimized turbine has a considerably larger rotor than the 126 m diameter rotor of the baseline turbine. It is also interesting to note that the optimal design has the lowest allowable height, implying that the energy gains by having a higher hub height do not outweigh the increase in tower and support structure costs. Increasing or decreasing the allowable rotor clearance may therefore alter the optimized rotor diameter and hub height. Figure 2 demonstrates the relative change in annual energy production with varying rotor radii and hub heights. If the hub height were to be lengthened to reach an overall tip height of no more than 600 ft (117m at a rotor diameter of 136m) there would be a ~14% AEP gain. This ~14% AEP gain is overshadowed by the roughly 37% ($902/kW) increase in combined tower ($133/kW) and BOS[2] ($769/kW) costs. If the energy production were to be maximized while staying below 600 ft and above the minimum air gap (Rotor diameter of 165m [Radius: 82.5m] @ hub height of 102.5m) the AEP would increase ~33% but again this increase in energy capture would be overshadowed by the roughly 52% ($1,277/kW) increase in combined tower ($247/kW) and BOS ($1,0304/kW) costs.

[1] Assumed a 185m tip height restriction.

[2] BOS costs include: Engineering, Permitting, Port and Staging, Foundation, Electrical, Installation Vessel, and Decommissioning costs.

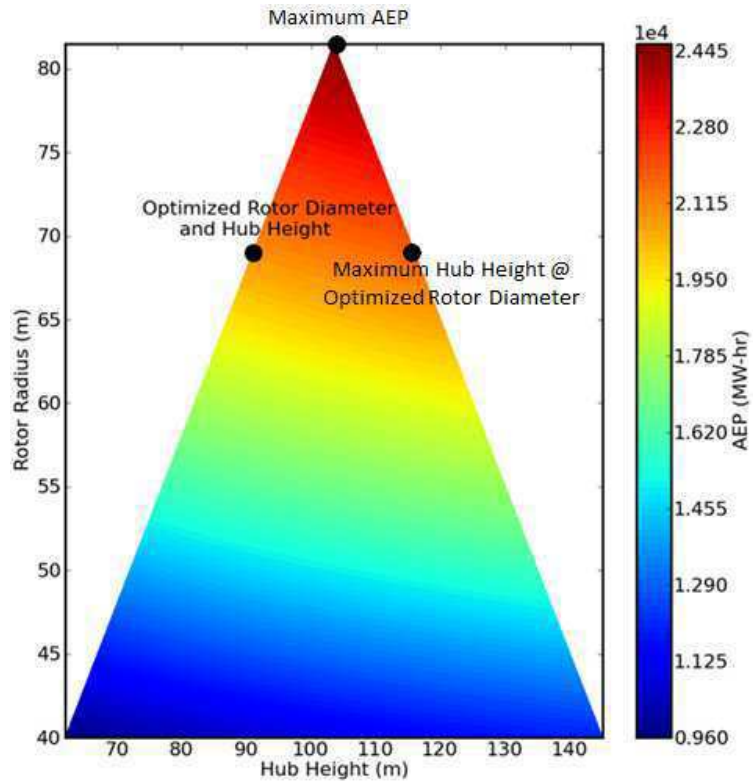

Figure 2: AEP sensitivity to Rotor Radius and Hub Height

Table 2: Optimized Rotor Diameter and Hub Height with 0.11 wind shear

	Baseline	Max AEP	Max Hub Height @ 136m Rotor	Optimized
Rotor Diameter (m)	126	165	136	136
Hub Height (m)	90	102.5	117	90
Wind Speed @ HH (m/s)	8.3	8.42	8.54	8.30
AEP (MWh/MW/yr)	3,199	4,126	3,589	3,453
Tower ($/kW)	258	505	391	301
BOS Costs ($/kW)	2,194	3,224	2,963	2,305
LCOE ($/kWh)	0.1594	.1822	0..1786	0.1586

2. Rotor Aerodynamic Optimization

With an optimized rotor size and hub height, NREL was able to develop an aerodynamically optimized blade. Through the rotor aerodynamic optimization, we are able to identify:

- Blade shape: Chord, twist, and airfoil specifications at thirty equally-spaced span-wise locations
- Turbine operating characteristics: Power, performance coefficient, torque, thrust, RPM, pitch angle, etc. as a function of oncoming flow speed

Approach

Use the HARP-Opt (Horizontal-Axis Rotor Performance Optimization) rotor optimization tool to design the blade shape and determine optimal turbine operating characteristics. HARP_Opt utilizes MATLAB's multiple objective genetic algorithm and the WT-Perf blade-element momentum (BEM) theory.

Assumptions

HARP-Opt was used to design a rotor with the objective of maximizing annual energy production (AEP) given the constraints given in **Error! Reference source not found.**. In addition, the NREL 5 MW Reference Turbine (www.nrel.gov/docs/fy09osti/38060.pdf) was used as a baseline (i.e. starting point) for the rotor optimization. Using the NREL turbine as a baseline imposed the following constraints:

- All blades are composed of the following airfoils: Cylinder, DU40-A17, DU35-A17, DU30-A17, DU25-A17, DU21-A17, NACA64-A17. The properties of these airfoils are provided in the NREL 5 MW Reference Turbine Report. The non-dimensional span-wise location of the different airfoils was also fixed
- Mechanical power generated by the rotor was limited to approximately 5300 kW. Power delivered to the generator is 5000 kW, based on mechanical losses in the system as described in the Reference Turbine Report
- The cut-in rotor tip speed was held constant at 45 m/s, corresponding to 6.9 RPM for 126 m rotor of the 5 MW Reference Turbine and 6.4 RPM for the 136 m rotor of the optimized rotor diameter
- The hub diameter was set to 3 m

Results

Table 3 and 4 present the turbine blade design and performance characteristic, respectively. Key results from these tables are summarized graphically in Figures 3 and 4.

Note that although the turbine has a low performance coefficient region at low flow speeds (<0.5 m/s, see Figure 2), the maximum Cp is 0.50. The low performance coefficient region is due to the specified cut-in tip speed velocity of 45 m/s. If the turbine is allowed to cut in with a tip speed of less than 45 m/s, the 0.50 Cp could be maintained across all operation flow velocities.

Table 3: Optimized Rotor Design

r/R	Radius	Pre-Twist	Chord	% Thick	Thickness
(-)	(m)	(deg)	(m)	(t/c)	(m)
0.040	2.720	13.03	2.820	95.5	2.693
0.073	4.928	13.03	3.429	78.3	2.686
0.105	7.136	13.03	4.133	64.3	2.659
0.138	9.344	13.03	4.689	55.4	2.600
0.170	11.552	13.03	5.036	49.5	2.495
0.203	13.761	13.03	5.203	44.8	2.330
0.235	15.969	13.03	5.231	40.0	2.093
0.268	18.177	10.01	5.184	35.0	1.814
0.300	20.385	8.85	5.086	35.0	1.780
0.333	22.593	8.05	4.954	35.0	1.734
0.365	24.801	7.42	4.801	35.0	1.680
0.398	27.009	6.87	4.636	30.0	1.391
0.431	29.218	6.38	4.464	30.0	1.339
0.463	31.426	5.93	4.289	25.0	1.072
0.496	33.634	5.50	4.111	25.0	1.028
0.528	35.842	5.09	3.933	25.0	0.983
0.561	38.050	4.70	3.757	25.0	0.939
0.593	40.258	4.31	3.582	21.0	0.752
0.626	42.466	3.93	3.411	21.0	0.716
0.658	44.675	3.56	3.241	21.0	0.681
0.691	46.883	3.19	3.078	21.0	0.646
0.723	49.091	2.83	2.915	18.0	0.525
0.756	51.299	2.47	2.761	18.0	0.497
0.788	53.507	2.11	2.608	18.0	0.469
0.821	55.715	1.76	2.465	18.0	0.444
0.854	57.923	1.41	2.322	18.0	0.418
0.886	60.132	1.07	2.191	18.0	0.394
0.919	62.340	0.73	2.061	18.0	0.371
0.951	64.548	0.40	1.942	18.0	0.350
0.984	66.756	0.08	1.826	18.0	0.329

Table 4: Rotor performance characteristics determined by HARP-Opt

Flow Speed (m/s)	Rotor Speed (rpm)	Blade Pitch (deg)	Power (kW)	Power Coefficient (-)	Root Flap (kN-m)	Torque (kN-m)	Thrust (kN)
3.000	6.41	0.0	58.84	0.247	1454.78	87.66	92.14
3.500	6.41	0.0	137.18	0.362	1782.33	204.37	115.69
4.000	6.41	0.0	241.12	0.426	2133.68	359.20	141.12
4.500	6.41	0.0	374.15	0.465	2507.88	557.39	168.31
5.000	6.41	0.0	539.93	0.489	2903.04	804.37	197.10
5.500	6.41	0.0	733.23	0.499	3301.22	1092.33	226.34
6.000	6.71	0.0	952.74	0.499	3817.76	1355.89	262.84
6.500	7.27	0.0	1211.33	0.499	4480.93	1591.11	308.50
7.000	7.83	0.0	1512.93	0.499	5197.18	1845.13	357.81
7.500	8.39	0.0	1860.84	0.499	5966.51	2117.96	410.77
8.000	8.95	0.0	2258.38	0.499	6788.92	2409.60	467.39
8.500	9.51	0.0	2708.85	0.499	7664.41	2720.04	527.66
9.000	10.07	0.0	3215.55	0.499	8592.97	3049.28	591.58
9.500	10.63	0.0	3781.81	0.499	9574.62	3397.33	659.16
10.000	11.19	0.0	4410.93	0.499	10609.35	3764.19	730.39
10.500	11.23	0.0	5085.49	0.497	11309.39	4324.39	781.92
11.000	11.23	2.8	5272.22	0.448	9535.51	4483.17	673.25
11.500	11.23	4.6	5285.61	0.393	8449.70	4494.56	607.89
12.000	11.23	6.0	5275.69	0.346	7659.97	4486.12	561.76
12.500	11.23	7.2	5256.64	0.305	7024.89	4469.92	525.67
13.000	11.23	8.2	5284.26	0.272	6566.49	4493.41	501.15
13.500	11.23	9.2	5254.60	0.242	6086.88	4468.19	475.13
14.000	11.23	10.1	5249.96	0.217	5696.71	4464.24	454.97
14.500	11.23	10.9	5289.67	0.196	5401.44	4498.01	441.08
15.000	11.23	11.7	5296.76	0.178	5094.31	4504.04	426.34
16.000	11.23	13.3	5210.88	0.144	4444.56	4431.01	394.43
17.000	11.23	14.7	5212.55	0.120	3972.41	4432.43	374.45
18.000	11.23	16.0	5254.22	0.102	3593.84	4467.87	360.40
19.000	11.23	17.3	5240.97	0.087	3210.63	4456.60	345.48
20.000	11.23	18.5	5307.76	0.075	2925.72	4513.39	337.03
21.000	11.23	19.7	5294.57	0.065	2598.36	4502.18	325.92
22.000	11.23	20.9	5291.73	0.056	2301.90	4499.76	316.88
23.000	11.23	22.0	5232.15	0.049	1988.60	4449.10	306.38
24.000	11.23	23.1	5213.39	0.043	1725.09	4433.15	298.88
25.000	11.23	24.2	5240.80	0.038	1508.00	4456.46	294.27

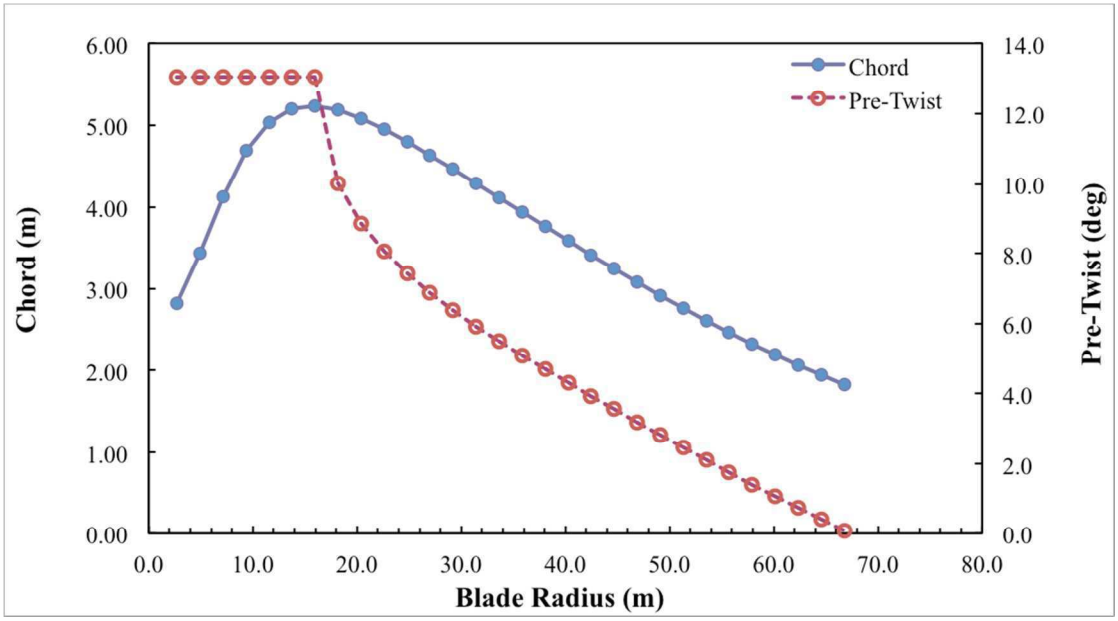

Figure 3: Turbine blade shape

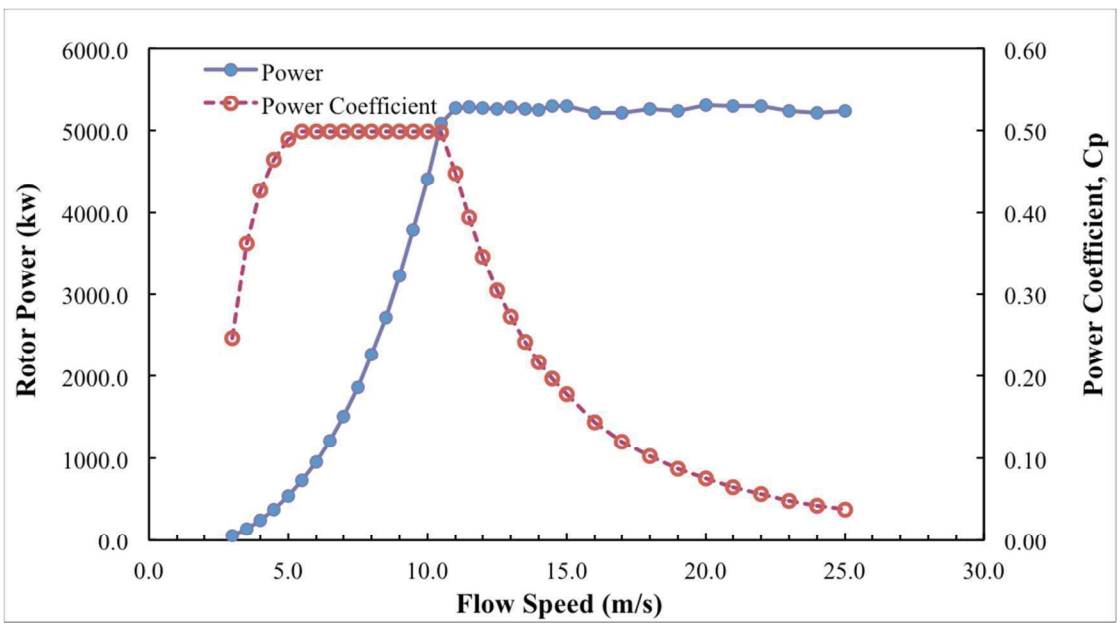

Figure 4: Rotor performance characteristics

Conclusions

The results of the rotor optimization for the Great Lakes wind regime indicate a rotor diameter of 138 meters and a hub height of 91 meters would result in the lowest LCOE. This increase in rotor diameter over the baseline of 126 meters is due to the low wind speeds at the intended deployment site. The corresponding optimal hub height of 91 meters demonstrates that based on the low wind shear conditions, the increase in support structure costs associated with higher hub heights outweighs the

gains in energy production from the stronger wind resource at higher elevations. The analysis also indicates that without restricting the blade tip clearance to 22 meters an even lower hub height would lead to cost reductions; therefore increasing or decreasing the allowable rotor clearance would alter the optimized rotor diameter and hub height.

Freshwater Lake Erie Wind Farm Layouts: Preliminary Results

November 15, 2013

George Scott, National Renewable Energy Laboratory (NREL) (george.scott@nrel.gov)

Introduction

This document compares the energy capture values and relative costs from a number of different turbine layouts for a hypothetical 500 megawatt (MW) offshore wind project in Lake Erie. OpenWind, a wind farm design tool, was used to analyze layouts of 100 5-MW turbines. Regular grids of turbines at spacings ranging from 6 rotor diameters (D) to 20 D, as well as a random layout, were studied.

Site

The Freshwater project is located in Lake Erie, approximately 32 km NNW of Ashtabula, Ohio. Figure 1 shows the approximate project boundary (outlined in yellow). The project area is approximately 420 square kilometers. It is located in the Central Basin of Lake Erie where the depth is relatively constant at about 22m. Two possible interconnections (green lines) to existing power plants were identified in the initial survey: Perry (west) and Ashtabula (east). Freshwater Wind has identified the Ashtabula power plant as the preferred interconnect for this study.

Figure 1 - Freshwater Project Area

Software

Power output and wake effects were modeled with OpenWind Enterprise, v.01.04.00.1111, (http://www.awstruepower.com/solutions/products/openwind/). OpenWind Enterprise is a wind energy facility design tool created by AWS Truepower (AWST) and licensed to NREL. It has the capability to perform layout design, flow modeling, wake modeling, and energy assessment. OpenWind Enterprise was selected by NREL for its interoperability with geographic information system (GIS) data as well as its capability to model deep array wake affects. This tool is intended for commercial applications. Wake losses were evaluated using the Deep Array Fast Eddy-Viscosity Wake Model (DAWM Fast Eddy-Viscosity) in OpenWind Enterprise.

Wind Data

The wind speed field was obtained from a 200m-resolution wind map produced by AWS/Truepower and converted to a WRG file, a standard type of input file for wind layout software. The WRG file represents the wind speed at 90m above the lake surface, matching the hub height of the proposed wind turbine. Figure 2 shows the wind speed grid across the project area.

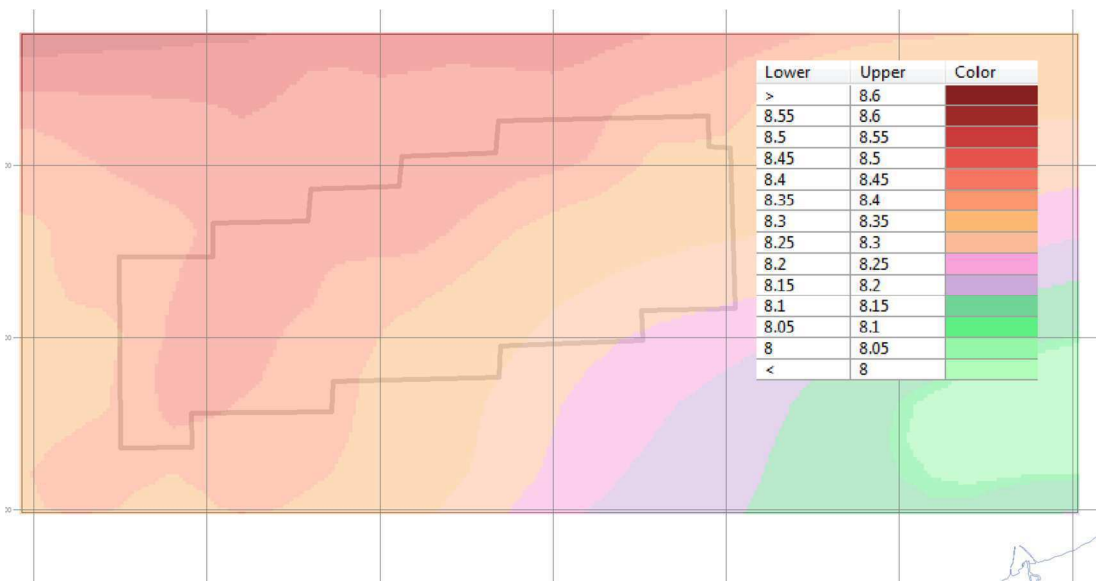

Figure 2: 90m Wind Speed Grid for Freshwater Project – Speeds range from 8.53mps in the NW corner to 8.03 in the SE

The wind map used to create the wind speed field did not include any wind direction information. The MERRA satellite reanalysis project from NASA/Goddard contains long-term data, including wind direction, on a 0.5 by 0.33 degree grid. The wind rose data for the MERRA point closest to the Freshwater project is shown in Figure 3 and its location ('M0100') is indicated with the red push-pin in Figure 4. The prevailing direction and the majority of the strongest winds are located in a fairly narrow sector around 225 deg (southwest). Each point in the WRG was assigned the same directional frequency distribution as point M0100; the magnitudes of the wind from each direction were scaled to match the wind speed values from the wind map.

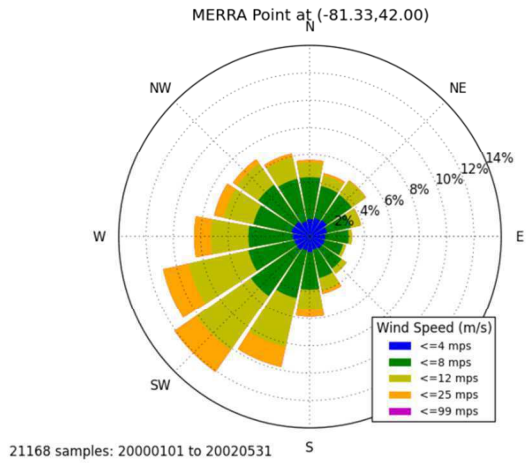

Figure 3: Rose near Freshwater project, based on MERRA satellite data from NASA/Goddard

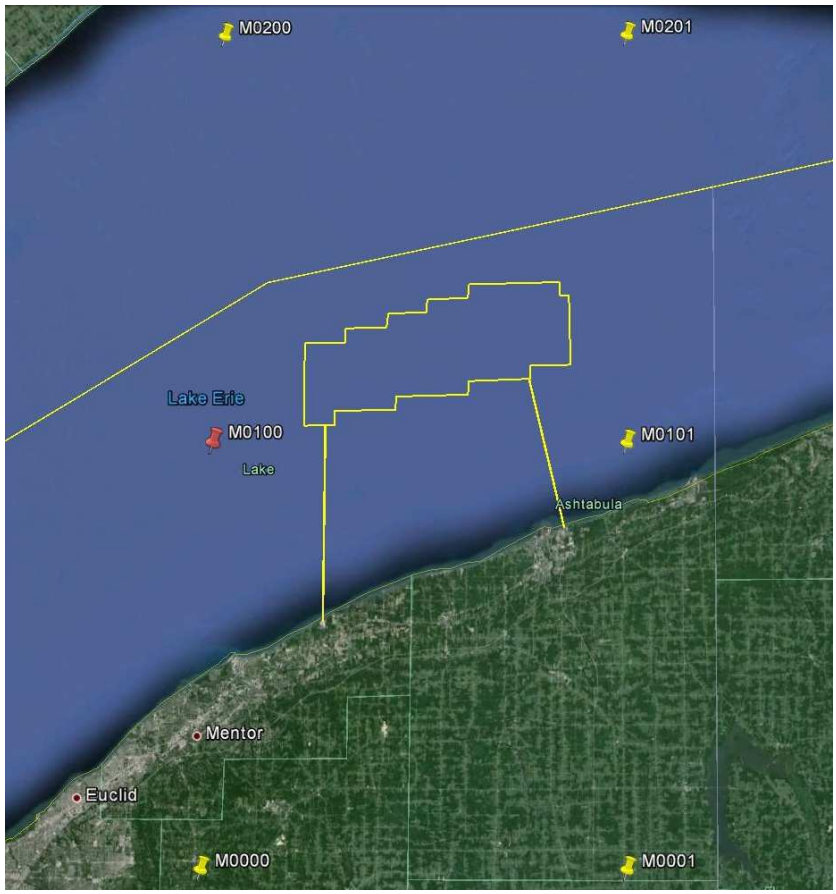

Figure 4: Location of MERRA grid point M0100

Site Bathymetry

The hypothetical site is located in the Central Basin of Lake Erie. Depth across the project area is almost constant, within ±1m of 22m, as shown in Figure 5. Bathymetry was obtained from NOAA's Geophysical Data Center [6]. Bathymetry is used when calculating the best cabling layout and cost of energy, but it has no effect on any of the energy production figures.

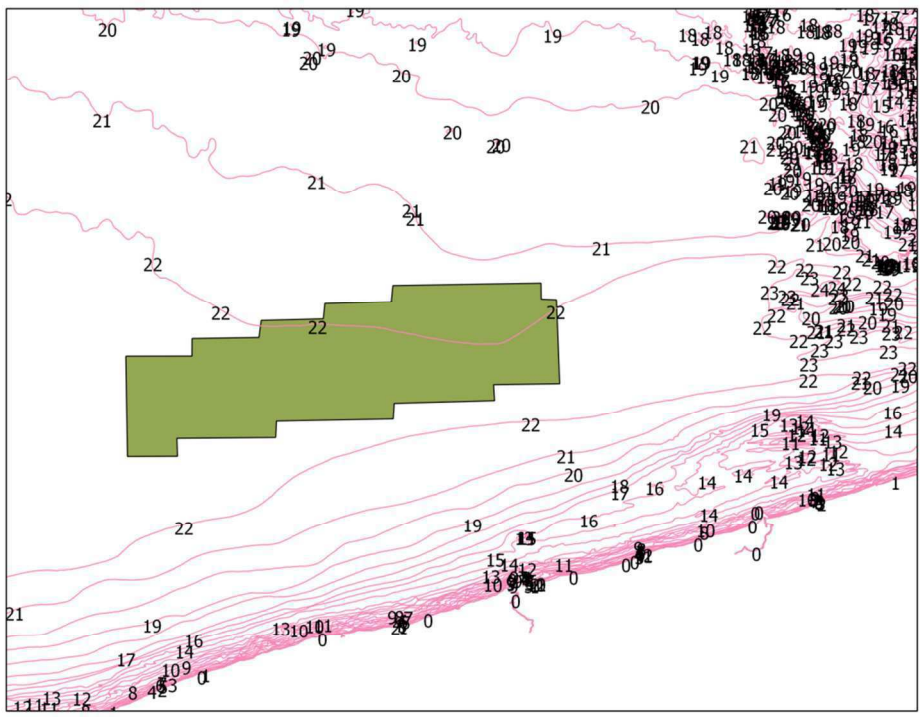

Figure 5 - Lake Erie Bathymetry in meters

Turbine Type

The Freshwater analysis used two different 5MW turbine models:

- The NREL 5MW reference turbine (Jonkman, 2009 [5])
- A version of the reference machine modified for use in the Great Lakes, with a power curve from the 'Rotor Optimization for the Great Lakes Wind Regime' found in the Appendix.

Both of these turbines are actually turbine models and do not represent any commercial wind turbine. Values obtained using these turbine models are useful for wind farm modeling, but should not be considered as representative of an actual installed wind farm.

The NREL reference turbine has a rotor diameter of 126m, while the optimized Great Lakes turbine is somewhat larger at 136m. The Great Lakes turbine is slightly more efficient at moderate wind speeds, and reaches its rated power at 11 m/s, as opposed to 12 m/s for the NREL reference turbine.

The power and thrust curves for these machines were used in OpenWind to create the energy capture reports. The assumed hub height of 90m corresponds to the height of the WRG grid that represents the wind field.

Table 1 shows the installed turbine density (in MW/ km^2) and Table 2 shows the maximum installed capacity of the project area (in MW) for both turbines at various spacings.

Table 1: Turbine density at various spacings

Turbine Density (MW/km^2)	Turbine Spacing			
Turbine Type	8D x 8D	8D x 10D	8D x 12D	8D x 15D
NREL Reference Turbine	**4.92**	**3.94**	**3.28**	**2.62**
Great Lakes Optimized Turbine	**4.22**	**3.38**	**2.82**	**2.25**

Table 2: Maximum installed capacity at various spacings

Installed Capacity (MW)	Turbine Spacing			
Turbine Type	8D x 8D	8D x 10D	8D x 12D	8D x 15D
NREL Reference Turbine	**2057**	**1646**	**1371**	**1097**
Great Lakes Optimized Turbine	**1766**	**1412**	**1177**	**942**

Turbine Layouts

Layouts with 100 turbines (for a wind farm with a nominal 500MW capacity) were investigated. All layouts were gridded, consisting of regular array of rows and columns. The primary differences between layouts are the turbine spacing (both across and along rows), the relative orientation of the turbines, the type of turbine installed, and the location of the layout within the project area. For this analysis, we assumed a default spacing of 8D x 12D, and aligned the rows of gridded layouts perpendicular to the prevailing wind. An example of a gridded layout with offset, where each row was shifted 4D relative to the row in front, was also considered.

Examples of gridded layouts with and without offset are shown in Figure 6. (Coordinates are in UTM Zone 17 (meters), the native coordinate system used by Open Wind.) Free-form layouts can be created by the user or automatically by OpenWind during a cost of energy optimization. In the present study, a single random (free-form) layout was compared to a number of gridded layouts.

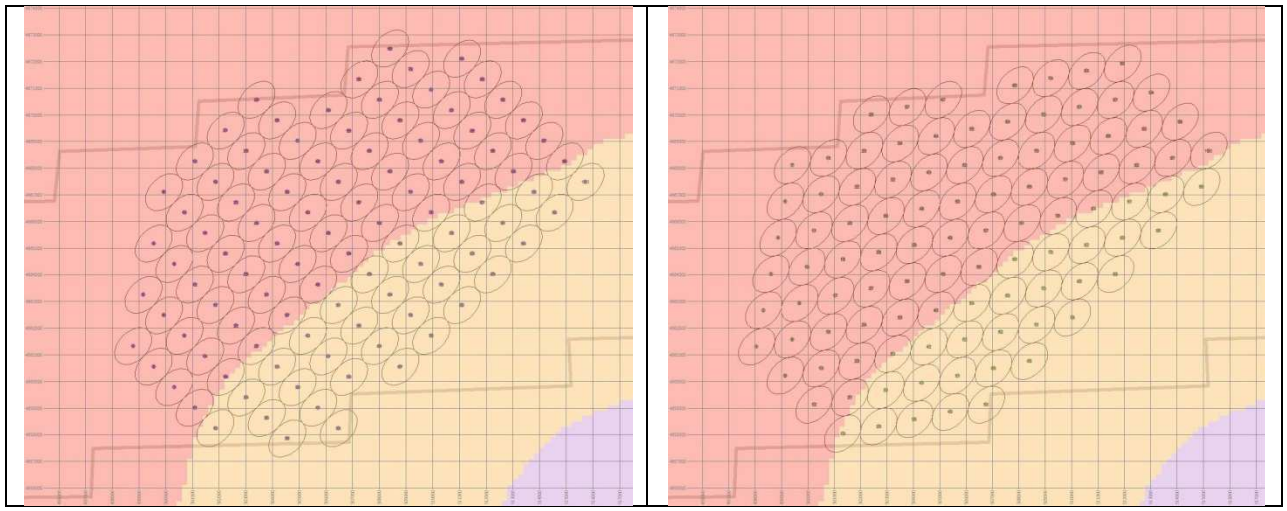

Figure 6: Sample Gridded Turbine Layouts: no offset (left), 4D offset (right) – both layouts using the Great Lakes 5MW turbine with 8D by 12D spacing

Procedures

The WRG file was imported into OpenWind. Layouts were created in OpenWind by laying out a regular grid at a given spacing and orientation and trimming it to 100 turbines. The effect of onshore topography on offshore winds was not included in this analysis, but since the project is well offshore and the fetch is mostly over water, the effect is anticipated to be insignificant.

Wake effects were calculated using OpenWind's Deep-Array Wake Model – Eddy-Viscosity model. This model considers each turbine to be a roughness element and results in higher wake losses than the Modified Park model, although it is slower to run.

Each layout was enabled in turn, and an energy capture report was generated and saved. These reports contain information for the layout as a whole, as well as parameters for each turbine. Parameters used here include: gross energy and net energy [GWh], capacity factor (after wake effects and base losses are subtracted) [%], array efficiency [%] and average energy per turbine [GWh].

Table 3 shows the base losses that are applied in the energy capture estimation. OpenWind is capable of handling many different types of losses, including turbine performance, turbulence, blade degradation, curtailments, etc., but only the losses shown in this table have been included in the present analysis. The values chosen for each type of loss are within the typical range seen in offshore wind farms, but are not meant to be representative of the Lake Erie site. If site-specific values are known for any loss type, the values could easily be updated and the models re-run. The same base losses were used in all OpenWind modeling for this study. Base losses have no effect on wake losses, but are taken into account when computing net power output, capacity factor and cost of energy.

Table 3: Base Losses Applied in OpenWind Model

Loss Type	Losses	Subcategory Losses
Availability Loss	3.00 %	
Environmental Losses	3.90 %	
Icing & Soiling		1.5%
Low/High Temperature Shutdown		1.5%
Lightning		0.9%
Collector System Loss	4.00 %	
Product of All Losses	**10.47%**	

Losses are applied multiplicatively and the environmental losses are composed of 3 separate components, so the total losses from Table 3 are:

$1.0 – (E_{avail} * E_{soiling} * E_{temp} * E_{lightning} * E_{collector}) =$

1.0 – 0.97*0.985*0.985*0.991*0.96 = **10.47%**

where the efficiency E is 1.0 minus the loss for each category.

Array (wake) losses (defined as 1.0 minus the array efficiency) further increase the total losses. For example, for an array efficiency of 94.91% (array losses of 5.09%):

Total losses = 1.0 – (0.8953 * 0.9491) = **15.03%**

Wake Losses vs. Array Orientation

To investigate the effects of array orientation on wake losses, a roughly circular layout of 69 turbines on an 8Dx12D grid was rotated by 10 degree increments from 0 to 170 deg and the wake losses computed at each step. (The circular layout was used so that the same cross-section was always presented to the wind and the spatial distribution of wind speeds was the same at all rotations. This layout was used only to explore the sensitivity of the model to changes in array orientation, and is not meant to be representative of any wind farm.) The OpenWind model shows very little variation over the entire range of orientations, with losses ranging from 4.99% to 5.10%. This range is consistent with NREL's experience in other OpenWind studies of offshore layouts.

Wake Losses vs. Row Spacing

The effects of row spacing on wake losses were computed by testing layouts of the NREL 5MW machine with row spacings of 8D, 10D, 12D and 15D, all with the same 8D side-to-side spacing and all oriented with rows perpendicular to the prevailing wind. Each layout consisted of 36 turbines in a 6-by-6 grid. Layout with larger spacing extended farther to the NE than those with closer spacing, meaning that they sampled a different part of the wind field. However, since the wind speed does not change much in the NE direction, this effect can probably be ignored. (These layouts were used only to explore the

sensitivity of the model to changes in row spacing, and are not meant to be representative of any wind farm.) As expected, wake losses (shown in Table 4) decrease with increasing row spacing, with the total change from 8D to 15D being about 1.5%.

Table 4: Wake losses for various spacings

Layout Spacing	Wake Losses %
8x8D	5.16
8x10D	4.52
8x12D	4.12
8x15D	3.68

Wake Losses in Regular and Offset Arrays

Wake losses in regular and offset layouts were compared using both types of turbines and are shown in Figure 7. Wake losses were slightly higher in the offset layouts.

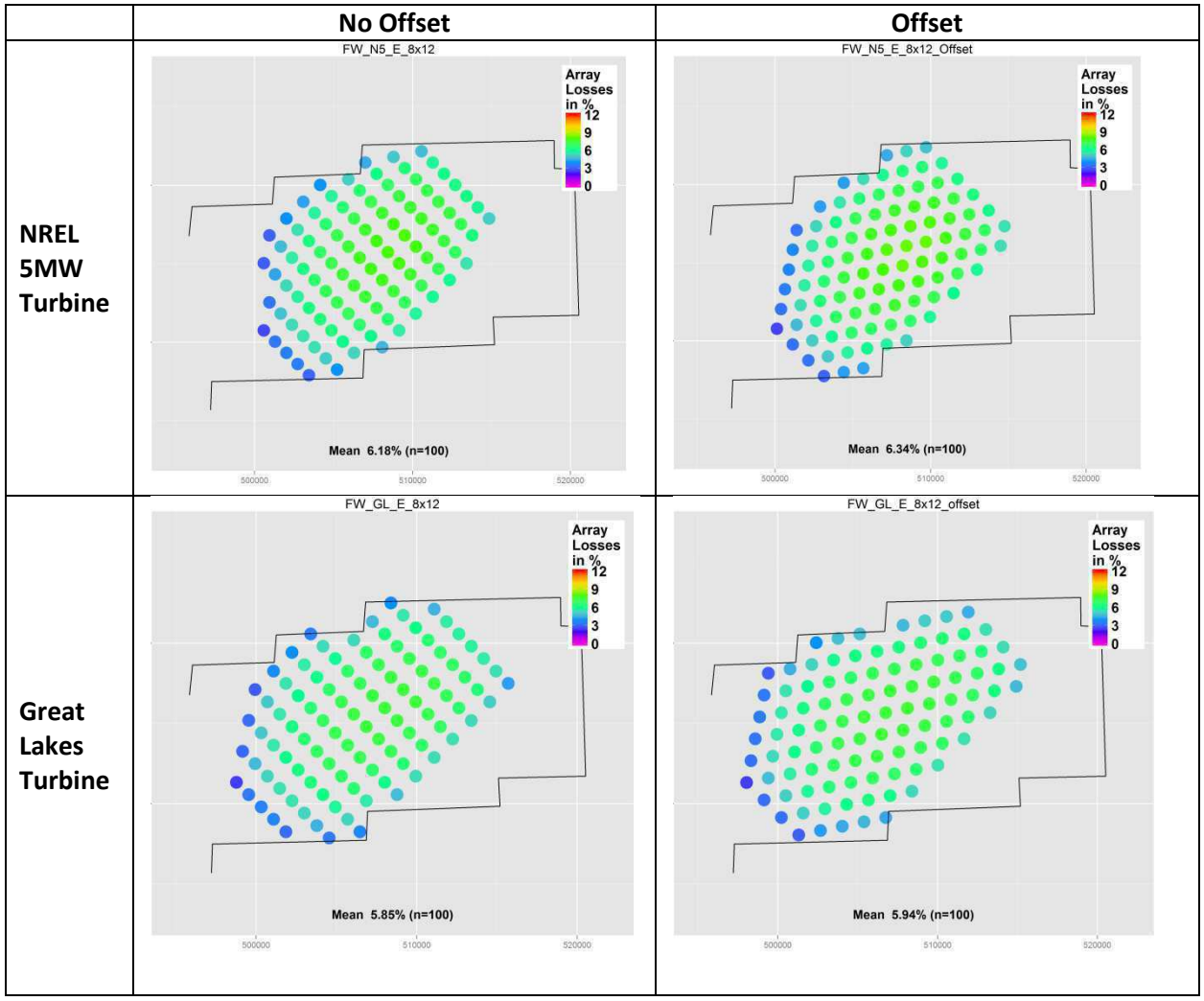

Figure 7: Wake loss comparisons: offset layouts (right column) vs. non-offset layouts (left column); NREL 5MW turbine (top row) vs. Great Lakes turbine (bottom row)

Energy Capture and Losses Results

Table 5 summarizes the energy capture results for the various layouts and turbines.

Table 5: Summary of wind farm performance for various layouts ('N5': NREL 5 MW turbine; 'GL': Great Lakes optimized turbine; 'DAEV': Deep Array/Eddy Viscosity wake model; 'MP': Modified Park wake model)

Turbine Type	Layout Type	Wake Model	Gross Energy (GWh/Yr)	Array Losses	Array Energy (GWh/Yr)	Base Losses	Net Energy (GWh/Yr)	Net Capacity Factor	Total Losses
N5	Gridded	DAEV	1891.992	6.18%	1775.095	10.47%	1589.317	36.26%	16.00%
N5	Offset	DAEV	1891.763	6.34%	1771.827	10.47%	1586.391	36.19%	16.14%
GL	Gridded	DAEV	2176.991	5.85%	2049.643	10.47%	1835.132	41.87%	15.70%
GL	Offset	DAEV	2177.820	5.94%	2048.424	10.47%	1834.041	41.84%	15.79%

Cost of Energy Calculation and Optimization

OpenWind has the capability to calculate the cost of energy for a given turbine layout. However, to get an accurate value for COE, precise costs of turbines, cables, substations, labor, etc. and precise values of losses and other factors are required. Since many of these numbers are not available for the hypothetical project, the following analysis should not be considered an accurate representation of final COE.

The OpenWind optimization process works by applying random permutations to the turbine layout and recomputing the COE. If the cost goes down, the new layout is adopted and OpenWind proceeds to the next iteration. The process repeats for a specified number of iterations or until the user determines that it has converged to a solution. Since this is a random process, it is likely that running the optimization again would result in a different (but hopefully similar) layout.

Cost of energy optimization as performed by OpenWind is quite sensitive to the balance between cable costs and array losses. Use of a different wake model during the optimization process would also change the layout and the resulting COE. OpenWind's Deep Array Wake Model typically shows higher wake losses than the Modified Park model, meaning that a greater distance between turbines would be preferred.

Due to the random process inherent in the optimization and to the complexity of the problem, OpenWind can sometimes get stuck in a local minimum. According to the OpenWind User Manual [7]:

> The [optimized cost of energy] is more prone than standard energy optimization to the problem of local minima. These are solutions which are attractive compared to other, similar layouts, but not compared to some very different layouts, which the software never finds. […] To work around this problem, it is recommended that the user run several optimizations from different random or user-input starting placements in order to attempt to find the global minimum, or true minimum cost-of-energy layout.

Because of the lack of precise input data, automated COE optimization was not run on the Lake Erie project. However, some of the test layouts presented here provide useful starting points for optimization as better input data become available.

Cabling and Associated Costs

As part of the cost of energy (COE) calculations, OpenWind computes an optimum cable configuration for the given turbine layout. OpenWind cable layout optimization is very sensitive to the type of cable used and to variations in the wind field. The cable types shown in Table 6 were used in all COE analyses in this study; these are meant to represent typical values for cables commonly used in wind farms and are not specific to any specific manufacturer's cables. When specific cable types and sizes are chose for the project, OpenWind could be re-run to provide more accurate lengths and costs.

Table 6: Cable types used in OpenWind cabling analysis

Cable Type	Capacity (MW)	Cost ($/meter) (material & installation)
1/0	5	700
500 kcmil	30	992
1000 kcmil	36	1160
132kV Interconnect	180	1350
230kV Interconnect	313	2270

Figure 8 shows the cable layout as determined by OpenWind for a gridded layout (8D by 12D spacing, Great Lakes turbine) towards the eastern end of the project area. There are 15 separate circuits connecting to the central substation, and each circuit serves from 5 to 7 turbines. Each circuit uses the smallest cable (1/0) at the most distant turbines and changes to 500 or 1000 kcmil cable closer to the substation.

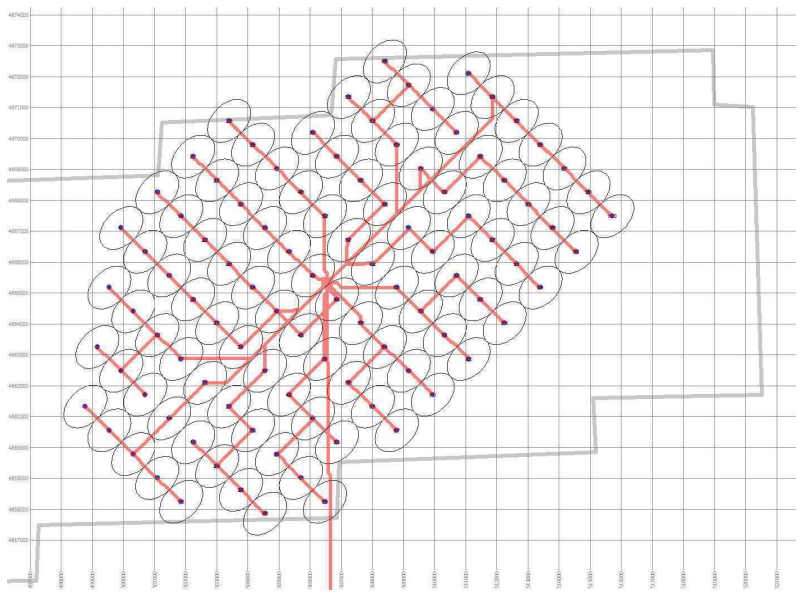

Figure 8: Sample Cable Layout as computed by OpenWind

Total cable lengths and costs for the layout are shown in Table 7.

Table 7: Cable lengths and costs for gridded layout (8D by 12D spacing, Great Lakes turbine)

Cable Type	Length (km)	Cost ($M)
1/0	48.19	33.732
500kcmil	58.94	58.467
1000kcmil	44.17	51.243
TOTAL	151.30	143.442

The distance from a substation roughly at the center of the wind farm to the Ashtabula power plant is approximately 30.8 km, for a cable cost of $41.6M per cable. The 500MW wind farm will require 3 of these cables (at a cost of $124.8M). If a 230kV interconnect cable were used, only 2 cables would be needed, for a cost of $139.9M. OpenWind assumes a single interconnect cable, so the cost per km of the 132kV interconnect cable was multiplied by 3 (since the capacity of the cable is 180MW). Common practice is to use one substation for every two interconnect cables, so a second substation was added (by doubling the cost of a substation).

To evaluate the effects of array spacing on cable length, cost and cost of energy, OpenWind was run on seven gridded layouts and one random layout that covered the entire project area. The eight layouts are shown in Figure 9. Each layout used 100 of the Great Lakes turbines and the parameters listed in Appendix A.

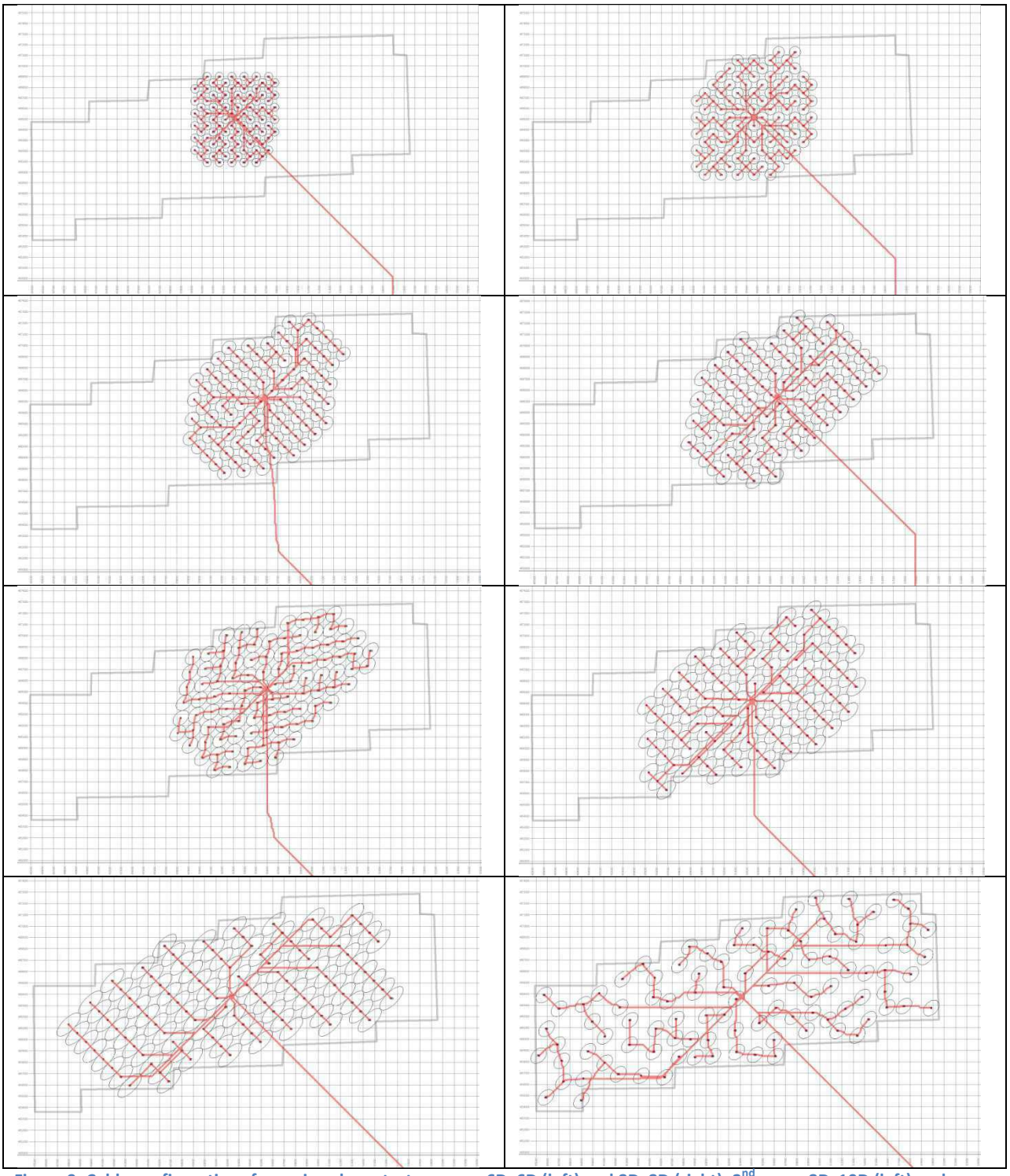

Figure 9: Cable configurations for various layouts: top row – 6Dx6D (left) and 8Dx8D (right); 2nd row – 8Dx10D (left) and 8Dx12D (right); 3rd row - 8Dx12D offset (left) and 8Dx15D (right); bottom row – 8Dx20D (left) and random layout (right)

Cable lengths, costs and overall COE as determined by OpenWind are shown in Table 8.

Table 8: Cable lengths, costs and COE for 500MW test layouts using OpenWind input values listed in Appendix A

Layout	Cable Length (km)	Cable Cost ($M)	COE ($/MWh)	Array Efficiency (%)	Net Energy (GWh/yr)
6Dx6D	101.3	95.2	188.95	90.1	1758.3
8Dx8D	132.6	121.4	185.48	92.7	1808.4
8Dx10D	144.2	134.7	184.71	93.6	1825.6
8Dx12D	151.3	143.4	184.30	94.2	1835.1
8Dx12D_offset	176.5	164.8	186.01	94.1	1834.0
8Dx15D	168.3	159.7	184.35	94.7	1845.9
8Dx20D	191.4	192.1	185.01	95.5	1863.8
Random	273.1	261.2	188.93	96.1	1872.4

Effects of Substation Placement

To compare the effects of substation placement on cable length and COE, we created a variation of the 8Dx12D layout that had the substation placed along the southeastern edge of the project area (Figure 10). This minimizes the interconnect cable length at the cost of increased length of cable within the wind farm itself.

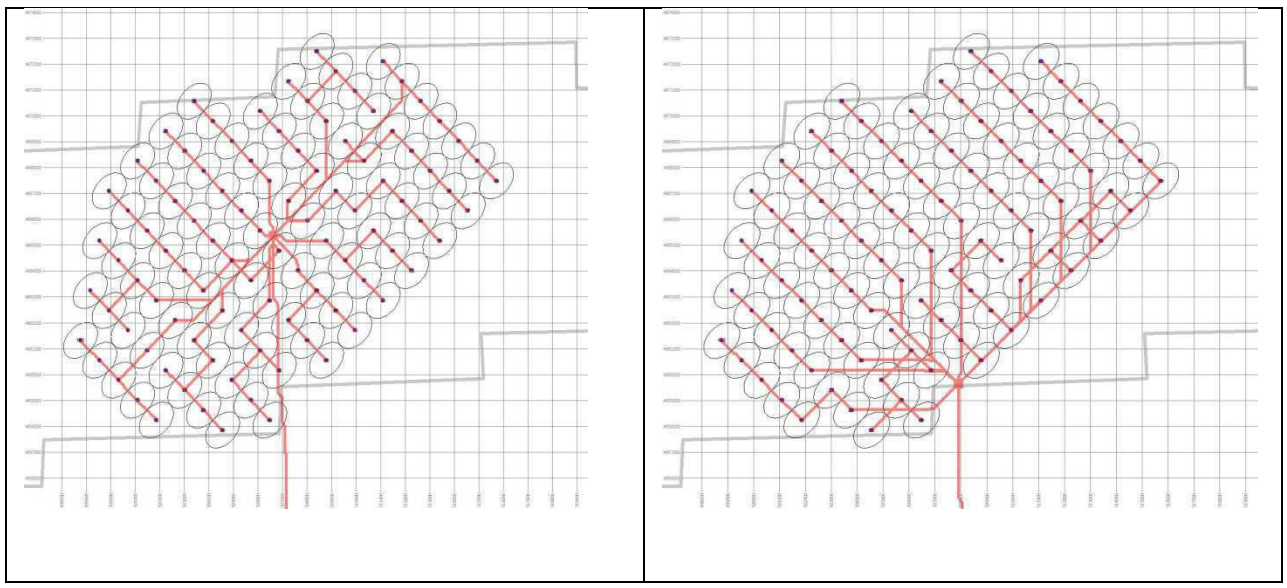

Figure 10: Cable configurations for different substation locations. Both layouts use the Great Lakes turbine on the same 8Dx12D regular grid. The left panel shows the cable configuration with the substation located in the center of the wind farm, while the right panel shows the configuration with the substation along the southeastern edge.

Table 9 compares lengths and costs for the in-farm cables and the interconnect cable.

Table 9: Cable lengths and costs for different substation locations

Substation Location	Cable Len (km)	Cable Cost	Interconnect Len (km)	Interconnect Cost	Total Cost	COE ($/MWh)
Center	151.3	$143.4M	30.83	$121.5M	$264.9M	184.30
Southeast edge	181.00	$180.9M	24.54	$96.7M	$277.6M	185.22

Using the specified inputs to OpenWind, the center substation location has about 0.5% lower COE than the southeastern location. Exact cable costs are needed since the relative cost of in-farm cable vs. interconnect could tip the balance the other way (or increase the difference).

Discussion

All cable lengths, costs and COE values presented here should be regarded as approximate values for the following reasons:

- Length of cable within the wind farm itself is highly dependent on the cable types available, particularly on the capacity (MW) of the larger cables which will connect multiple turbines to the substation. A difference of a few MW could increase the number of turbines that could be connected by a single cable and hence lower the total cable length.
- Other algorithms or manual layout of cables may result in shorter overall cable lengths.
- Exact costs of all available cable types are needed for an accurate estimate of COE.
- OpenWind assumes a single substation and a single interconnect cable. In practice, operating wind farms may have multiple substations and cables. Using multiple substations has the potential to further reduce COE by shortening in-farm cables, but doing this analysis in OpenWind is difficult.

Figure 11 shows the relationship between cost of energy and separation distance, using the given parameters with 100 Great Lakes turbines. Along-row spacing is 8D (except for the 6D case where it is 6D).

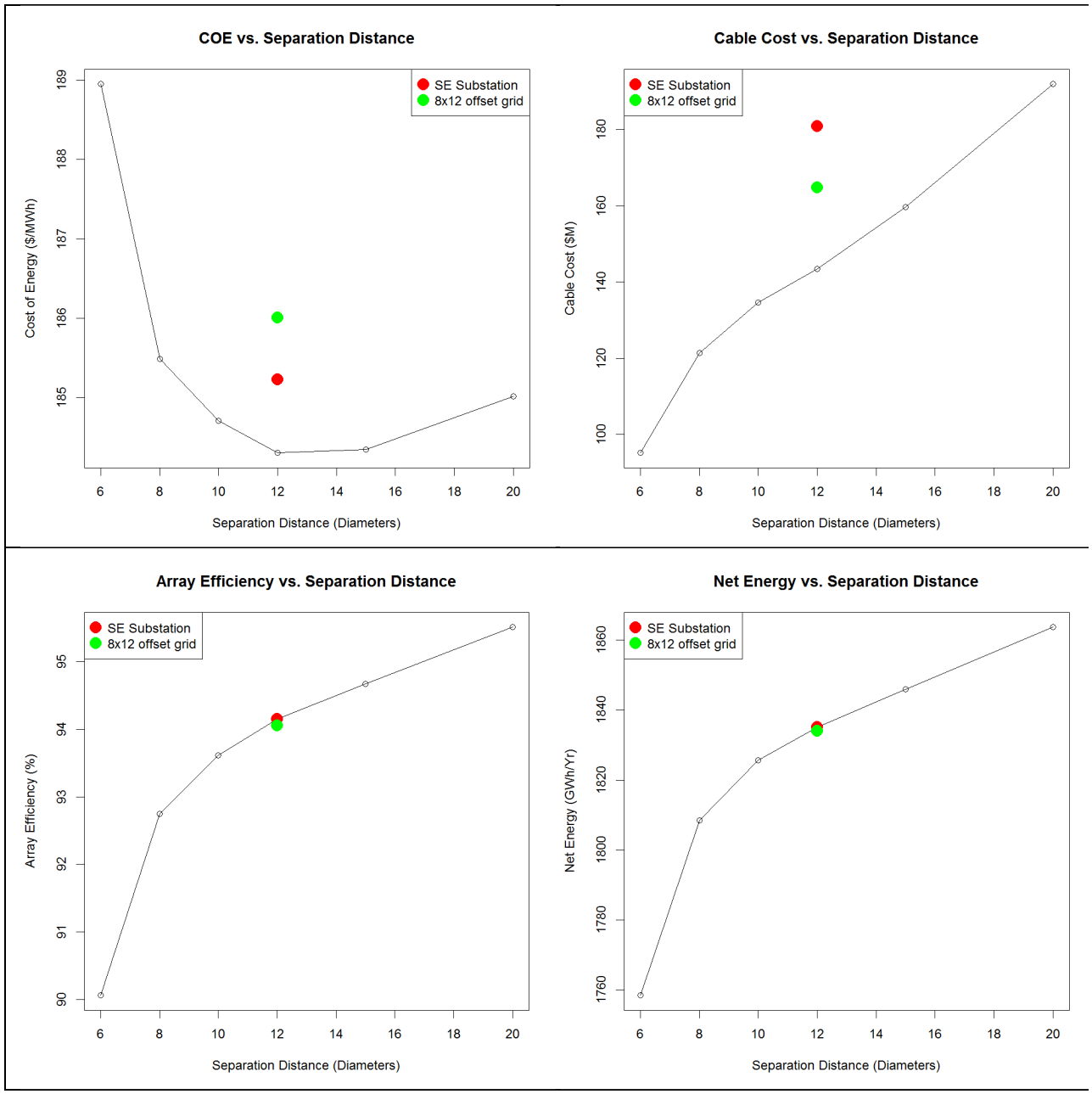

Figure 11: Cost of energy (top left), cable costs (top right), array efficiency (bottom left) and net energy production (bottom right) at various row spacings. Wind farm uses 100 Great Lakes turbines with parameters from Appendix A.

Cost of energy reaches a minimum at a row spacing of around 12 diameters, a value consistent with spacings used in other NREL analyses of offshore wind farms. The exact location of this minimum is highly dependent on the shapes and values of the other curves presented in this figure: cable cost, array efficiency and net energy. Small changes in any of these (e.g., changes in the cost or capacity of individual cable types) could move the minimum in either direction.

An analysis of this type can give an approximate idea of the final cost of energy of a project, and can be useful for exploring the sensitivity of COE to changes in input parameters. Due to the uncertainty in many input values and to the simplicity of the models, it cannot give exact (or 'bankable') numbers.

Key Findings

Below are the key findings of the NREL analysis for the assessment of the hypothetical Freshwater project. They provide considerations for developers and stakeholders involved in the Lake Erie offshore wind energy development process.

- The hypothetical project area of approximately 418 km^2 has ample space to accommodate 1000 to 2000 MW of wind capacity (assuming installation densities of 2.5 to 5.0 MW/ km^2).

- The maximum capacity of the hypothetical area, using 8D x 12D spacing and the NREL 5MW machine, was found to be 1371 MW. Using the Great Lakes turbine, also at 8D x 12D, the capacity is 1177 MW.

- Depth across the project area is almost constant at about 22m.

- The western part of the hypothetical area may have a greater advantage due to higher wind speeds and better access to export cable interconnection points.

- Average annual wind speed for the region ranged from 8.25 m/s to 8.42 m/s, with highest wind speeds to the northwest and lowest wind speeds to the southeast. This corresponds to overall capacity factors of 36.5% for the NREL 5MW machine and 39.93% for the Great Lakes turbine after wake losses are subtracted when using 8D x 12D spacing. If wind data from a site-specific meteorological model or actual measurement data were available, final value of energy production and COE might be improved.

- Wake losses increased with decreasing turbine spacing as expected. Average values for a 6-by-6 array of NREL 5MW turbines ranged from 3.68% for 8D x 15D spacing to 5.16% for 8D x 8D spacing.

- Wake losses at individual turbines from 500 MW projects developed at 8D x 12D spacing ranged from 1.93% to 7.37% (average 5.68%) for the Great Lakes optimized turbine and from 2.18% to 7.86% (average 6.07%) for the NREL 5MW reference turbine.

- Wake losses are highest in the interior of a wind farm and can be up to 5% higher than losses at the upwind side of the project.

- Grid orientation angle was found to have a negligible impact on array efficiency (<0.1%) using the OpenWind model with 8D x 12D spacing and 10% turbulence intensity. The true impacts of variable turbulence intensity may not be well captured in OpenWind. A more rigorous array analysis approach is recommended to developers in this area.

- Total cable length within the wind farm is on the order of 150-200km, depending on the type of cables used. The cable optimization is very sensitive to the cost and capacity (MW) of the cables, so figures presented here should be regarded as approximate.

- Length and cost of interconnect cables (substation(s) to shore) do not differ much between layouts, since the substation locations are similar. Total cost of interconnect cables may be substantial, since multiple cables (and perhaps multiple substations) will be required for a project of this size.

- In practice, operating wind farms may have multiple substations and interconnect cables rather than the single substation and cable assumed by OpenWind. Using multiple substations has the potential to further reduce COE by shortening in-farm cables, but doing this analysis in OpenWind is laborious and the resulting COE is very sensitive to cable and substation cost information which is not available at the moment.

- Using the assumptions listed in Appendix A, the minimum cost of energy appears to be reached with a row spacing of about 12 rotor diameters. The COE curve is fairly flat at the bottom, meaning that an increase to 15D would not affect the COE very much. Lowering the spacing below 12D, however, causes a much sharper increase in COE.

- Additional development cost will be introduced with wider spacing due to higher cable length. The final cost of energy from a Lake Erie wind farm will be very sensitive to the costs of cables and the wake losses associated with each turbine. An exact analysis of these costs may be beyond the capabilities of an automated tool such as OpenWind.

- To get a turbine layout that is optimized for cost of energy, exact values of many wind farms will be required. NREL recommends using the services of a wind farm layout professional to determine the final configuration. Finding an optimized layout will probably require extensive expertise in wind farm design, supplemented with the use of automated tools like OpenWind.

- The analysis in this report is coarse by industry standards and it is recommended that prospective lessees conduct more rigorous analysis on wake losses before judging the values of these leasing areas. This enhanced analysis should consider diurnal, seasonal, and annual variations as well as a full cost assessment to examine the additional cost due to added cable length. In addition, further analysis on wake losses with respect to atmospheric stability conditions is recommended. Finally, installation and operational logistics may require certain constraints on the wind farm layout that have not been included in this study.

- COE numbers presented in this report are imprecise due to uncertainties in the input values and costs, but can provide a useful comparison between layouts. For a detailed study of LCOE, see the report 'Levelized Cost of Energy Summary'.

References

1. http://www.awstruepower.com/solutions/products/openwind/ - OpenWind Enterprise
2. http://www.awstruepower.com/wp-content/media/2011/04/AWST-openWind-Enterprise-Feb2011.pdf - OpenWind Enterprise
3. http://www.awsopenwind.org/downloads/documentation - OpenWind technical details
4. http://www.awsopenwind.org/downloads/documentation/DAWM_WhitePaper.pdf - OpenWind Deep-Array Wake Model

5. Jonkman, J.; Butterfield, C.P.; Musial, W.; Scott, G. (February 2009). Definition of a 5-MW Reference Wind Turbine for Offshore System Development. NREL/TP-500-38060. Golden, CO: NREL. http://www.nrel.gov/docs/fy09osti/38060.pdf
6. NOAA Geophysical Data Center, Bathymetry of Lake Erie & Lake Saint Clair, http://www.ngdc.noaa.gov/mgg/greatlakes/erie.html
7. http://www.awsopenwind.org/downloads/documentation/openWindUserManual.pdf - OpenWind User Manual

Appendix A – OpenWind settings for computing Cost of Energy

Availability Loss [%]	3.00					
Icing Loss [%]	1.50					
Low/High Temperature Shutdown Loss [%]	1.50					
Lightning Loss [%]	0.90					
Collector System Loss [%]	4.00					
Project Life [years]	20					
Discount Rate [%]	11.8					
Debt Ratio [%]	0					
Debt Interest Rate [%]	0					
Debt term [years]	n/a					
One-time Initial Costs	$5,000,000					
Annual Costs	$75,000,000					
Collector System Settings						
Connection to Grid	$5,000,000					
High Voltage Cable to Grid*	$1,314,000	/km	132.00	kV	0.0200	Ω/km
Substation Cost*	$5,000,000					
Cable Type: 1/0	5.000	MW	700.00	/m	0.3224	Ω/km
Cable Type: 4/0	7.000	MW	750.00	/m	0.1608	Ω/km
Cable Type: 500kcmil	30.000	MW	992.00	/m	0.0689	Ω/km
Cable Type: 1000kcmil	36.000	MW	1160.00	/m	0.0361	Ω/km
Cost multiplier when using seeded infrastructure	0.000					
Cost of circuit protection at substation	$150,000					
Compute solution at	40.0	meters				
Look for nearest	10	neighbours				
Hours in a year	8766					
Total Direction Steps	72					
First Direction Step	0					
Last Direction Step	71					
Direction Offset [degs]	0.000					
First Wind Speed	0.000					
Last Wind Speed	70.000					
Wind Speed Step	1.000					
Wake Model	DAWM Eddy-Viscosity					
Look for upwind background roughness from layers	ON					
Background Roughness Length [m]	0.030					
Turbine Roughness Length [m]	1.300					
Height of Boundary Layer [m]	2000.0					
Turbine Radius Multiplier	1.000					
Stability Length [m]	0.000					
Middle of IBL starts at [x hub height]	1.000					
Wake Width [degrees]	7.500					
Detailed	Off					
Z0 Combination (Vertical)	RMS					
Limit Z0 to Turbine Z0	On					
Wake Model	ON					
Use DAWM to modify TI	ON					

Axial Resolution	0.500					
Radial Resolution	0.200					
Minimum wake deficit	0.000200					
Filter	ON					
Conserve Momentum	OFF					
Maximum length of wake in rotor diameters	50.000					
Topo Wakes:	ON					
Directional Shear:	OFF					
Air Density Lapse Rate [kg/m^3/km]	-0.1130					
Default Ambient Turbulence Intensity [%]	10.000					
Air Density Across Site [kg/m^3]	1.214830	to	1.214830			
Mean Air Density At Turbines [kg/m^3]	1.214830					
Directional Curtailment	OFF					
Turbine Scheduling	OFF					

*Substation and interconnect costs are multiplied by appropriate factors depending on the size of the wind farm

Turbine Costs

Turbine including transformer, erection, etc	$10,500,000
Turbine foundation	$6,000,000
O&M	$750,000 per turbine per year (in Annual Costs above)

Assessment of Improved Operations and Maintenance Strategies

Shallow Water Offshore Wind Optimization for the Great Lakes
FOA 415 Topic Area 2

Table of Contents

Table of Contents 1

List of Acronyms and Abbreviations 2

ECN O&M Tool Analysis—Method and Results 3

1. Baseline Operation and Maintenance Strategy 3
2. Baseline Operations and Maintenance Cost and Downtime Results 10
3. Impact of Hypothetical Operations and Maintenance Proposed Innovations 15
4. Conclusions 20
5. Recommendations for Future Operations and Maintenance Analysis 22

References 22

List of Acronyms and Abbreviations

AEP - Annual Energy Production

BOS - Balance of station

CBM - Condition based maintenance

CWTM - Corrective wind turbine maintenance

Demob - Demobilization

ECN - Energy Research Centre of the Netherlands

FTC - Fault type classification

hp - Horsepower

km - Kilometers

kWh - kilowatt-hour

LOA - Length overall

MC - Maintenance category

MERRA - Modern Era-Retrospective Analysis for Research and Applications

Mob - Mobilization

MWh - Megawatt hour

NASA - National Aeronautics and Space Administration

O&M - Operations and maintenance

OEM - Original equipment manufacturer

RDS-PP - Reference Designation System for Power Plant

TIV - Turbine installation vessel

VWEA - Virginia Wind Energy Area

WIS - Wave Information System

ECN O&M Tool Analysis—Method and Results

This report is one of six deliverables for the Freshwater Operation and Maintenance Improvement Study. This paper assesses two potential improvements to the operation and maintenance (O&M) for the baseline wind farm located offshore in Lake Erie that uses workboats. The considered improvements over using a standard workboat for O&M in Lake Erie includes; 1) the use of an ice-breaking tug strategy, and 2) a helicopter strategy. Lake Erie has the potential to develop ice in the winter and spring months for any given year. This icing phenomenon makes it difficult to transport maintenance personnel and equipment. The prevention of access to a turbine for repair not only increases the downtime of the turbine and reducing availability but ultimately increases the levelized cost of energy (LCOE). The assessment of using an ice-breaking vessel or helicopter versus a standard workboat to access the wind farm was considered to identify potential improvements for O&M activities for freshwater offshore wind farms.

The baseline wind farm for this O&M improvement study consists of a 500-MW shallow water wind farm located approximately 27 km due north from the Port of Ashtabula, Ohio in Lake Erie. The sections of this report include;

- Description of the O&M model used for the analysis;
- Estimated O&M cost and downtime for a baseline scenario;
- Estimated O&M cost and downtime for ice-breaking tug and helicopter improvement strategies ; and,
- A set of recommendations for further study that could potentially improve our understanding of O&M strategies for the Great Lakes region.

1. Baseline Operation and Maintenance Strategy

The industry leading offshore wind O&M planning software, is the ECN O&M Tool v.4. (Obdam et al. 2010). This tool is used to assess the O&M improvement strategies and estimate the downtime and cost of these strategies in Lake Erie.

The level of effort required for O&M activities for a wind plant can typically be characterized by a bathtub curve. The shape of the bathtub curve is derived from the high level of corrective maintenance required both during the commissioning or break-in period and again approaching the end of design life for the wind plant, and the relatively steady amount of preventive maintenance throughout the lifespan of the wind plant. It should be noted that additional factors to the ones aforementioned may also contribute to the shape of the bathtub curve. The ECN O&M tool, however, estimates the long-term annual average corrective and preventive maintenance costs, which masks the trend of the bathtub curve and produces a flat average cost over the lifetime of the wind plant (Figure 1). In addition to the long-term annual average maintenance cost, the tool also calculates the annual average downtime associated with corrective and preventive maintenance, which impacts plant availability.

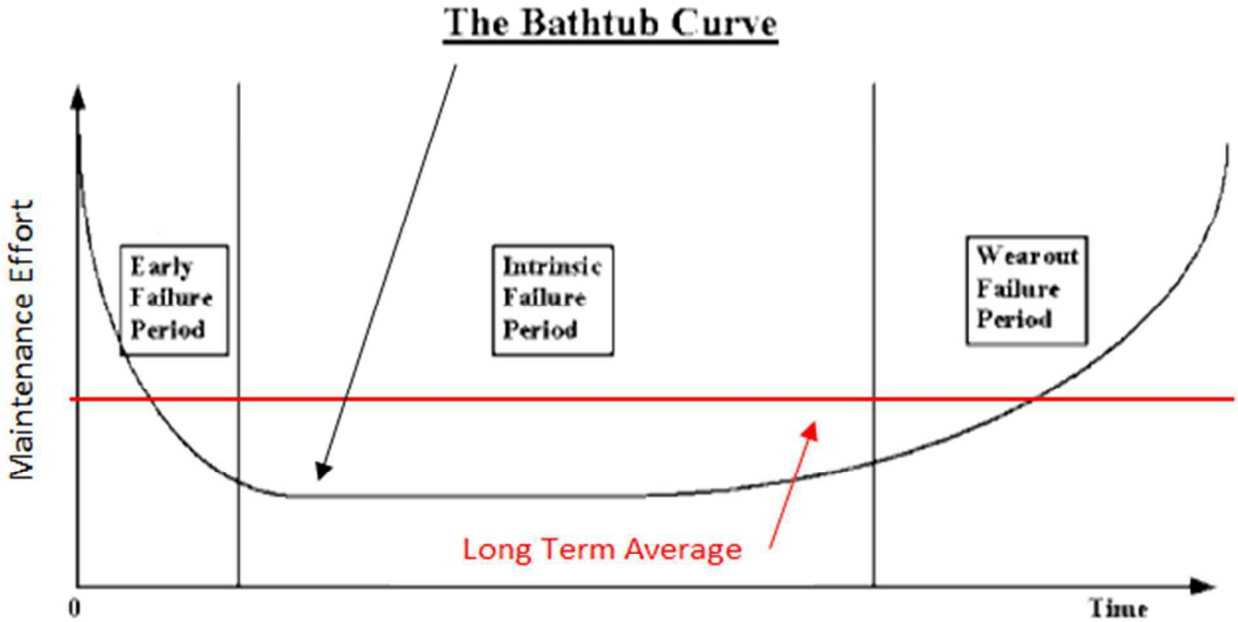

Source: Hembree et al. (2010). Modified by NREL.

Figure 1. Example of estimated O&M efforts over the life of a wind turbine using the ECN O&M tool

For the baseline site the following long-term average data and assumptions were used as inputs to the ECN O&M tool:

- **Failure frequency of wind turbine and balance of station components:** O&M costs are highly dependent on the failure rates of the components within the wind plant. Both cost and downtime estimates for corrective wind turbine maintenance rely on wind turbine failure rate assumptions from the Reliawind study, with assumptions provided by NREL and ECN (Wilkinson et al. 2010; Maples et al. 2013). Data on the failure rates of BOS components are currently limited; therefore, the BOS component failure rates were assumed to be identical to those assumed in the ECN North Sea O&M case study (van der Zee and Obdam 2011). An example of a BOS component could be a wind farm transformer. Recent studies have shown an increase in wind speed and turbulence correlate with an increase in failure rates for wind turbine blades, pitch systems, and mechanical drivetrain components (Tavner 2012). Consideration of potential increased failure rates for higher wind speed sites were not considered in this analysis. Table 1 summarizes the wind turbine component taxonomy and failure rates used in the model. Table 2 contains a summary of the BOS component failure rates.

Table 1. Wind Turbine Component Failure Rate Assumptions

System (RDS-PP Taxonomy)[a]	Subsystem (Reliawind)	Failure Rate
MDC, Blade Adjustment	Pitch system ,slip rings, blade bearings	0.9778
MDY, Control and Protection System Turbine	Control and communication system, nacelle sensors, condition monitoring system	0.8616
MKY, Control and Projection	Power cabinet, protection cabinet, frequency converter	0.6001

System Generator		
MDL, Yaw Gearbox	Yaw system	0.5076
MSA, Generator Lead/Transmission Cables	Low- and medium-voltage switchgear, power feeder cables	0.4651
MKA, Generator	Generator assembly	0.3246
MDK, Drivetrain	Gearbox, mechanical brake, high speed shaft, main shaft	0.2888
UMD, Turbine Structure/Tower	Tower	0.1512
MDA, Rotor System	Blades, hub, hub cover	0.1307
MST, Transformer	Transformer	0.0795
MDX, Hydraulic System	Hydraulic system	0.0536
XM, Crane System	Service crane	0.0144
XA, Heating, Ventilation, Air Conditioning	Cooling system	0.0140
MUD, Machinery Enclosure	Nacelle cover, bedplate, lighting points, beacon	0.0138
AB, Lightning Protection/Grounding	Lightning protection, grounding	0.0118
XN, Elevator System	Lift	0.0055
	Total (average annual failure rate of wind turbine)	4.5

[a] Reference Designation System for Power Plant (RDS-PP) taxonomy developed by Müller et al. (2012)

Table 2. BOS Component Failure Rate Assumptions

Component	Failure Rate
Transformer	0.5
Foundation/Scour Protection	3.0
Cables Within Wind Farm	0.05

- **Repair strategy:** Each defined component was assigned a set of repair strategies. A repair strategy consists of the following:
  - Maintenance category (MC) estimates of the equipment and effort required to repair the fault (Table 3)
  - The probability of occurrence associated with each of the MCs
  - Number of additional inspections required to complete the repair; for modeling purposes an inspection can be characterized as a small repair
  - Fault type classification (FTC) further specifies the effort required to complete the repair which includes the crew size, time needed for the repair, and the cost for spare parts (Table 4).

The ECN O&M tool has the capability to analyze repairs known as condition based maintenance (CBM). CBM is considered to be a repair activity based on the outcome of inspection or as a result of condition monitoring data. The baseline and improved O&M strategies only consider corrective maintenance approaches, where maintenance activities are scheduled after failure of components, and do not account for CBM. This approach was considered to simplify the model since the focus of the improvement study is to look at improving wind turbine access during the winter. Consideration of CBM would be better conducted with more specific input data and should be considered for future work.

Table 3. Baseline Maintenance Categories[a]

Type	Description
Category 1: Remote Resets	Resets take 2 h and can be done remotely
Category 2: Inspection and Small Repair Inside Turbine	Requires workboat, 3 technicians, and consumables, and can be completed within 2–6 h
Category 3: Inspection and Small Repair Outside Turbine	Requires workboat, 3 technicians, and consumables, and can be completed within 6–10 h
Category 4: Replacement Small Parts (<2 mT) Using Internal crane	Requires workboat, 3–4 technicians, and spare parts, and can be completed within 8–24 h
Category 5: Preventive Replacement of Small Parts (<2 mT)	Requires workboat, 3–4 technicians, and spare parts, and can be completed within 8–24 h
Category 6: Replacement of Large Parts(<2 mT)	Requires workboat, jack-up barge, 6 technicians, and spare parts, and can be completed within 24–40 h

[a] Maintenance categories were developed by ECN.

Table 4. Baseline Fault Type Classes[a]

FTC	Description	Material Costs (% of Turbine Capital Costs)	Crew Size (people)	Repair Time (h)
1	No crew, repair = 2 h, no costs	0.0%	0	2
2	Small crew, repair = 4 h, consumables	0.01%	3	4
3	Small crew, repair = 8 h, consumables	0.01%	3	8
4	Small crew, repair = 8 h, low costs	0.10%	3	8
5	Small crew, repair = 16 h, low costs	0.10%	3	16
6	Large crew, repair = 16 h, medium costs	1.00%	4	16
7	Large crew, repair = 24 h, medium costs	1.00%	4	24
8	Large crew, repair = 24 h, high costs	5.00%	4	24
9	Small crew, repair = 8 h, low costs	0.10%	3	8
10	Large crew, repair = 16 h, medium costs	1.00%	4	16
11	Large crew, repair = 24 h, medium/high costs	2.00%	6	24
12	Large crew, repair = 24 h, high costs	3.00%	6	24
13	Large crew, repair = 40 h, medium/high costs	2.00%	6	40
14	Large crew, repair = 40 h, very high costs	10.00%	6	40

[a] Fault type classifications were developed by ECN.

- **Repair vessels:** The following access vessels and repair equipment are assumed for conducting turbine and BOS repairs:
    - Workboat access vessel: transfers technicians and transports small components (less than 2 mT)
    - Purpose-built turbine installation vessel (TIV): transports and hoists large components and is assumed to be turbine and site specific (greater than 2 mT)
    - Diving support vessel: performs underwater inspection and repairs
    - Cable-laying vessel: repairs cables.

NREL used best estimates derived from currently available data, to represent vessel transportation time, transport speed, mobilization time, and day rates. Each vessel is also characterized by weather limitations, including maximum wind speed, maximum wave height, and maximum ice coverage, to account for anticipated weather-related downtime. The model uses the wind and wave restrictions, along with correlated, long-term probability distributions characterizing site specific metocean

conditions, to estimate to the total duration required to complete a repair. Table 5 gives details on vessel specification assumptions.

Table 5. Vessel Specifications[a]

Vessel Type	Maximum Wind Speed (m/s)	Maximum Wave Height (m)	Maximum Ice Coverage (%)	Day Rate (k$)	Lease Rate (k$/year)	Mobilization Time (h)[b]	Mob/Demob Cost (k$/mission)[c]	Travel Time (h)[d]
Workboat	12	1.5	10	-	730	0 (leased)	0 (leased)	0.9
Purpose-built TIV	10	2.0	10	212	-	720	1,060	-
Diving Support Vessel	25	2.0	10	95	-	360	475	-
Cable-Laying Vessel	25	1.0	10	190	-	720	2,660	-

[a] Detailed vessel specifications and costs were obtained from NREL best estimates, estimates from the ECN O&M tool Case Study (van der Zee and Obdam 2011), estimates from Douglas Westwood (Douglas Westwood 2013), and discussions with the U.S. marine contractors.
[b] The vessel mobilization time assumes the vessel is available to conduct the turbine repair. This analysis does not anticipate when vessels may or may not be available based on the market.
[c] The vessel mob/demob costs were estimated by NREL and determined using mobilization durations and vessel day rates. The costs associated with offshore wind vessels are not well established for U.S. projects and can fluctuate depending on market conditions. A better understanding of vessel costs and subcontract strategies may reduce vessel day rates and mob/demob costs, resulting in potentially significant reductions in overall O&M costs.
[d] Travel time is the time to travel from port to site for a one-way trip and includes the time for the technicians to access the turbine from the workboat. Travel time is used to accrue travel costs for the workboat. Travel cost for the purpose-built TIV, diving support vessel, and cable-laying vessel are considered in the day rate and mob/demob costs.
Note: Additional costs are included in the ECN O&M tool not listed in the table (e.g., fuel costs). Fuel costs for the workboat were estimated using ECN's North Sea case study converted to U.S. dollars.

The model accounts for situations in which a failure could occur during the mobilization of the purpose-built TIV. In this case the repairs would be clustered and the average logistical costs per repair will be lower. This model capability is included in the baseline and helicopter scenarios, however, was not utilized for the ice-breaking tug scenario. Difficulty in modeling the cluster of repairs for the winter and winter and spring seasons was experienced.

The wind, wave, and ice data are important inputs for calculating the average waiting time and cost to perform wind turbine maintenance and repair. A description for each of the data inputs to the model include:

- **Baseline site wind and wave data:** The wind speed and significant wave height data were obtained from the Army Corps of Engineers Wave Information Studies (WIS) Lake Erie Station 92053 (U.S. Army Corps of Engineers 2013). Modern Era-Retrospective Analysis for Research and Applications (MERRA) data from The National Aeronautics and Space Administration (NASA) was used where correlated wind speed data gaps occurred. Over thirteen years of wind speed and wave height data from December 1, 1988, to May 31, 2002, were used as input data for the

model. The data are vital to calculating the average waiting time as a function of the "mission time" based on restrictive weather constraints for vessel travel and various maintenance activities. Mission time is defined as the time to travel to and from the operations base and the time to complete the repair.

- **Baseline site ice data:** The ice data was obtained from the National Oceanic and Atmospheric Administration (NOAA) Great Lakes Ice Atlas (Assel 2003). The data was computed as the maximum ice coverage at seven points along a north to south oriented line near the west edge of the project area and was reported as a percentage of ice coverage. The ice data was correlated with the WIS wind and wave data to obtain a complete input data set for the model. The ice data used for the model is essentially a step function for each year when ice is present (Figure 2). This step function characteristic is common throughout all of the annual ice periods with variation in the duration of the ice period. Historical data from 1965 to 1975 report average time for freeze-up on Lake Erie is typically the last week in December and the average time for ice breakup was the second week in March and tends to have high variance from year to year (Driedger-Marschall et al. 2009). This equates to approximately 11 weeks or 77 days that ice is present on Lake Erie annually. The average icing periods from the Great Lakes Ice Atlas correlate well with reported historical data.

  Because available ice data is only recorded as percent coverage there is no indication of the depth of the ice. This presents a challenge since most vessels specify ice-breaking capabilities by ice depth. Therefore, assumptions on vessel and ice-breaking tug limitations must be quantified using percentage of ice coverage. It was assumed typical workboats and vessels could not access the turbines for repair if the water contains > 10% ice, ice-breaking tugs were assumed to be restricted >50%. The use of a purpose-built ice-breaking vessel (e.g. the U.S. Coast Guard's Mackinaw) was not considered as an access vessel to conduct repairs. Data collection efforts for ice depth or data correlation methods should be conducted to better model vessel access capabilities in iced conditions.

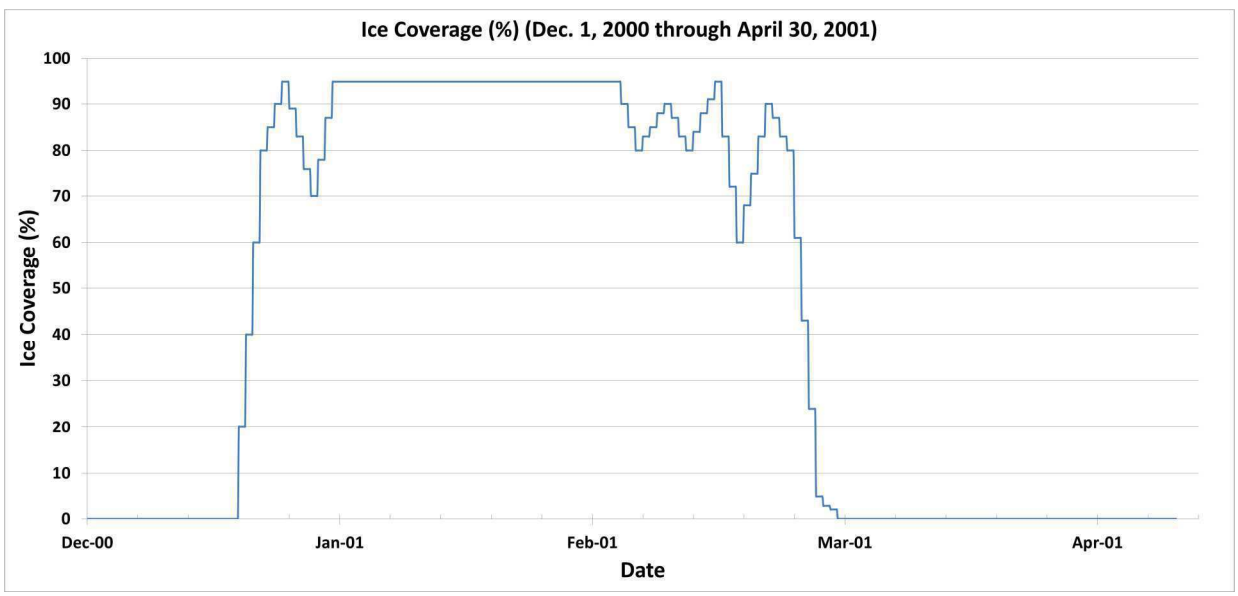

Figure 2. Illustration of icing period from December 1, 2000 through April 30, 2001 from NOAA ice coverage data set.

There are limitations to the utilization of the ECN tool. Knowing the fundamental calculations, assumptions, and limitations is essential to understanding the validity of the results. An overview of the high level calculations, assumptions, and limitations are:

- **Waiting time for repair:** The ECN O&M tool estimates the mean waiting time as a function of the repair mission time using polynomial functions. Each vessel is associated with a specified "weather window," defined as the time period during which the vessel can likely perform repairs given its individual operational limits. Outside the weather window the vessel is required to wait in port until the allowable weather window opens. A summary of the average waiting time per mission time for the access and hoisting equipment is shown in Figure 3. A common trend between the O&M access and hoisting equipment is the high rate of increase in mean waiting time as repair mission times become very long. The figure shows that the average waiting time for a blade inspection is the highest given that the task must be performed in periods where the wind speeds are relatively low in addition to allowable wave height and ice limitations.

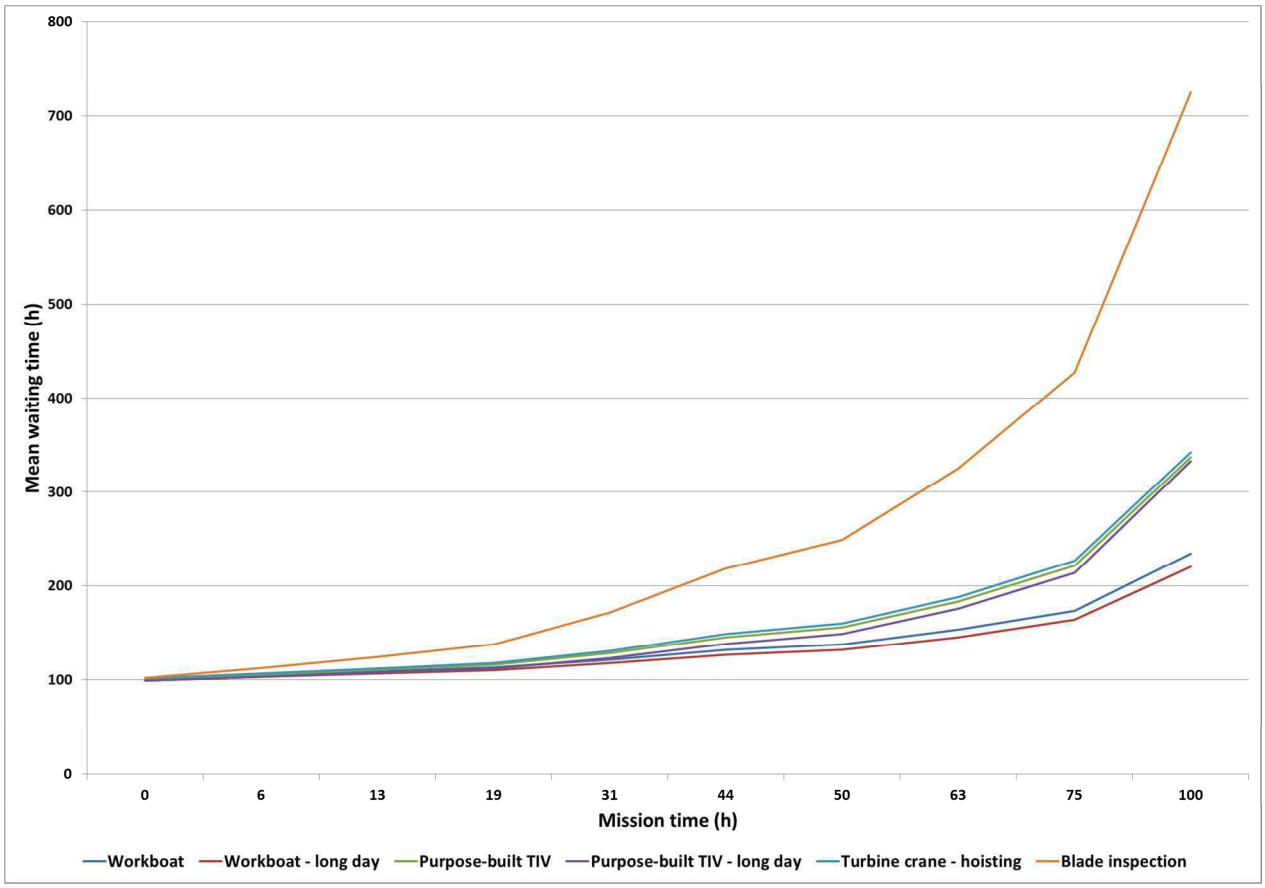

Figure 3. Average waiting time per mission time for various O&M site access vessels and hoisting equipment

- **General O&M model assumptions:** Some general assumptions used for the baseline O&M analysis include the following:
    - Small parts (less than 2,000 kg) are assumed to remain in stock and repairs can be performed with the workboat in combination with derrick cranes mounted on each

turbine. Workboat cannot access the wind site if the lake contains greater than 10% ice.

- Large parts are assumed not to be kept in stock and must be ordered from the manufacturer in the event of a failure. A purpose-built TIV is required in order to exchange large turbine components. The purpose-built TIV cannot access the wind site for repairs if the lake contains greater than 10% ice.
- Technicians work during daylight periods except for repairs that require the use of a purpose-built TIV. In that case, two shifts of technicians work 24 h/day to complete the repair.
- The burdened hourly rate for a technician is assumed at $125/h and is only calculated during travel to the repair and the time it takes to complete the repair.

- **Modeling limitations:** The ECN O&M tool, like all models, has limitations; these limitations are:
  - Primarily driven by the limited amount of empirical data available for offshore wind projects. The cost and downtime estimates for corrective wind turbine maintenance (CWTM) rely on wind turbine failure rate assumptions determined by the Reliawind study (Wilkinson et al. 2010). The failure rates generated by this study generally estimates drivetrain failure rates that are lower than those derived from other comparable databases for land-based turbines, potentially because the Reliawind study covers relatively newer wind projects.
  - Assumptions and component failure rates for BOS components are characterized as a best guess due to data limitations. As a result, the cost and downtime associated with BOS component O&M are considered to be rough estimates. The three scenarios in this report assumed access using a workboat for BOS repairs throughout the year. We recommend further efforts to better understand failure rates and repair strategies associated with offshore BOS components.
  - The seasonal considerations of the model are restricted to specific months of the year. The winter months are considered to be December, January, and February and the spring months are considered March, April, and May. This report considers assessment of the O&M improvement strategies for the helicopter and ice-breaking tug during the winter months.
  - For this study, we observed that O&M costs are largely driven by specialized vessel (e.g., purpose-built TIVs) requirements, in terms of assumptions about day rates and mobilization costs. The mobilization costs and day rates for offshore wind plant O&M vessels are considered to be best estimates. More work is needed to understand maintenance vessel strategies and costs for the Great Lakes region.

2. Baseline Operations and Maintenance Cost and Downtime Results

The summary in Table 6 presents both a seasonal and annual breakdown of the downtime and costs associated with wind turbine and BOS corrective and preventive maintenance. The Total column represents the summation of the results for each of the four seasons. The results in the Year column represent annual estimates without taking into account seasonal differences in wind and wave climate. The results reported in this document use the values in the Total column.

Table 6. Summary of Baseline O&M Results – Using Workboats

Summary of downtime and costs		Availability [%]	87.6%
Location	Lake Erie - 5 MW	Costs [$ ct/kWh]	5.26
Type of WT	NREL 5 MW Offshore Turbine	Total effort [M$]	91.7

ECN O&M Tool 4.4

Wind farm		100 turbines	Winter	Spring	Summer	Autumn	Total	Year
Downtime per year								
Corrective WT	Logistics	hr	3,437	3,437	3,437	3,437	13,748	13,748
	Waiting	hr	55,149	11,546	42	916	67,654	69,201
	Travel	hr	143	143	143	143	572	572
	Repair	hr	1,881	1,826	1,747	1,826	7,281	7,305
	TOTAL corrective WT	hr	60,610	16,952	5,369	6,322	89,254	90,825
Corrective BOP	Logistics	hr	2,003	2,003	2,003	2,003	8,014	8,014
	Waiting	hr	6,666	1,300	5	91	8,061	7,789
	Travel	hr	11	11	11	11	45	45
	Repair	hr	261	228	203	228	920	912
	TOTAL corrective BOP	hr	8,941	3,543	2,222	2,333	17,039	16,760
Preventive	**TOTAL preventive**	hr	0	924	1,452	264	2,640	2,640
	TOTAL	hr	**69,551**	**21,419**	**9,043**	**8,920**	**108,934**	**110,226**
Availability		%	68.2%	90.2%	95.9%	95.9%	87.56%	87.4%
Loss of production per year		MWh	164,770	31,830	7,230	17,086	220,917	182,507
Energy production per year		MWh	354,050	293,615	167,871	402,414	1,217,950	1,267,939
Revenue losses per year		k$	**20,536**	**3,979**	**904**	**2,136**	**27,615**	**22,813**
Costs of repair per year								
Material costs								
Corrective WT	**TOTAL corrective WT**	k$	4,512	4,512	4,512	4,512	18,048	18,048
Corrective BOP	**TOTAL corrective BOP**	k$	15	15	15	15	61	61
Preventive	**TOTAL preventive**	k$	0	569	894	162	1,625	1,625
	TOTAL	k$	**4,527**	**5,096**	**5,421**	**4,690**	**19,733**	**19,733**
Labour costs								
Corrective WT	**TOTAL corrective WT**	k$	686	686	684	686	2,742	2,744
Corrective BOP	**TOTAL corrective BOP**	k$	1	1	1	1	3	3
Preventive	**TOTAL preventive**	k$	0	346	530	99	975	988
	TOTAL		**687**	**1,033**	**1,215**	**786**	**3,720**	**3,735**
Costs equipment								
Corrective WT	MOB/DEMOB	k$	2,363	2,363	2,363	2,363	9,453	9,453
	Waiting	k$	11,020	2,512	709	709	14,950	14,179
	Repair	k$	1,937	1,937	1,936	1,937	7,747	7,747
	TOTAL corrective WT	k$	15,320	6,812	5,008	5,009	32,150	31,379
Corrective BOP	MOB/DEMOB	k$	390	390	390	390	1,558	1,558
	Waiting	k$	853	178	55	59	1,145	1,176
	Repair	k$	228	226	226	226	905	903
	TOTAL corrective BOP	k$	1,471	793	670	674	3,608	3,636
Preventive	**TOTAL preventive**		0	506	694	144	1,344	1,444
	TOTAL		**16,791**	**8,111**	**6,373**	**5,827**	**37,102**	**36,460**
Corrective WT		k$	**20,518**	**12,010**	**10,204**	**10,207**	**52,939**	**52,170**
Corrective BOP		k$	**1,487**	**809**	**686**	**690**	**3,672**	**3,700**
Preventive		k$	**0**	**1,420**	**2,118**	**406**	**3,944**	**4,057**
Fixed yearly costs		k$	**1,022**	**840**	**840**	**840**	**3,541**	**3,359**
Total costs of repair		k$	**23,027**	**15,079**	**13,849**	**12,142**	**64,097**	**63,287**
Total cost per kWh		$ cent/kWh	**6.50**	**5.14**	**8.25**	**3.02**	**5.26**	**4.99**
Total costs of repair per kW installed		$/kW	**46**	**30**	**28**	**24**	**128**	**127**
Total cost per kW investment			**2.4%**	**1.5%**	**1.4%**	**1.2%**	**6.6%**	**6.5%**
Total effort								
Sum revenue losses & total costs of repair		k$	**43,623**	**19,058**	**14,752**	**14,278**	**91,711**	**86,100**

The two important outputs from the analysis are wind plant availability and O&M cost. Wind plant availability is the ratio between the actual number of operational hours and the total possible number of operational hours:

$$Availability = \frac{Possible\ annual\ operating\ hours - Annual\ O\&M\ downtime\ hours}{Possible\ annual\ operating\ hours.}$$

The annual availability for the baseline scenario is estimated to be 87.6%, where the majority of the downtime is associated with CWTM. The O&M costs are estimated to be $0.053/kWh. A typical O&M strategy in the Virginia Wind Energy Area (VWEA) yields an availability of about 93.3% with an estimated cost of $0.025/kWh (Maples et al. 2013). The difference in availability between the Lake Erie site and the VWEA site is due to the wind, wave, and ice restriction on the lake during the winter. The driving difference is that the VWEA does not have the icing restriction. If the Lake Erie site did not produce ice in the winter the availability would be approximately 96%. The cost difference is increased mainly due to the waiting time for the access and hoisting equipment to get to the Lake Erie site.

Most of the costs are accrued by the CWTM. The O&M costs analysis includes corrective maintenance only. CBM was not considered for the baseline analysis. Total cost includes costs from labor hours, repair materials, vessels and equipment usage, and rental costs for an O&M operations base but does not include revenue losses from maintenance downtime.

2.1. Operations and Maintenance Primary Cost Drivers

O&M costs are primarily driven by CWTM. The replacement of large wind turbine components is the biggest contributor to the cost of CWTM, as shown in Figure 4. This is because of the high equipment costs associated with replacing large wind turbine components. The equipment costs include mobilization cost, hourly cost (including time that equipment is waiting or being repaired), travel cost, and repair cost. We assume that the replacement of large components for the baseline 5 MW turbine will require the use of a purpose-built TIV that is capable of navigating the St. Lawrence Seaway. The high costs associated with using a purpose-built TIV drive the high replacement costs. Currently, there are no regional vessels capable of handling large wind turbine repairs. Development of new jack-up type vessels in the Great Lakes region is expected to have lower day rates than a purpose-built TIV and may introduce O&M cost savings. The high equipment costs for replacing large turbine components are driven by the variable costs of the equipment during waiting, as shown in Figure 5.

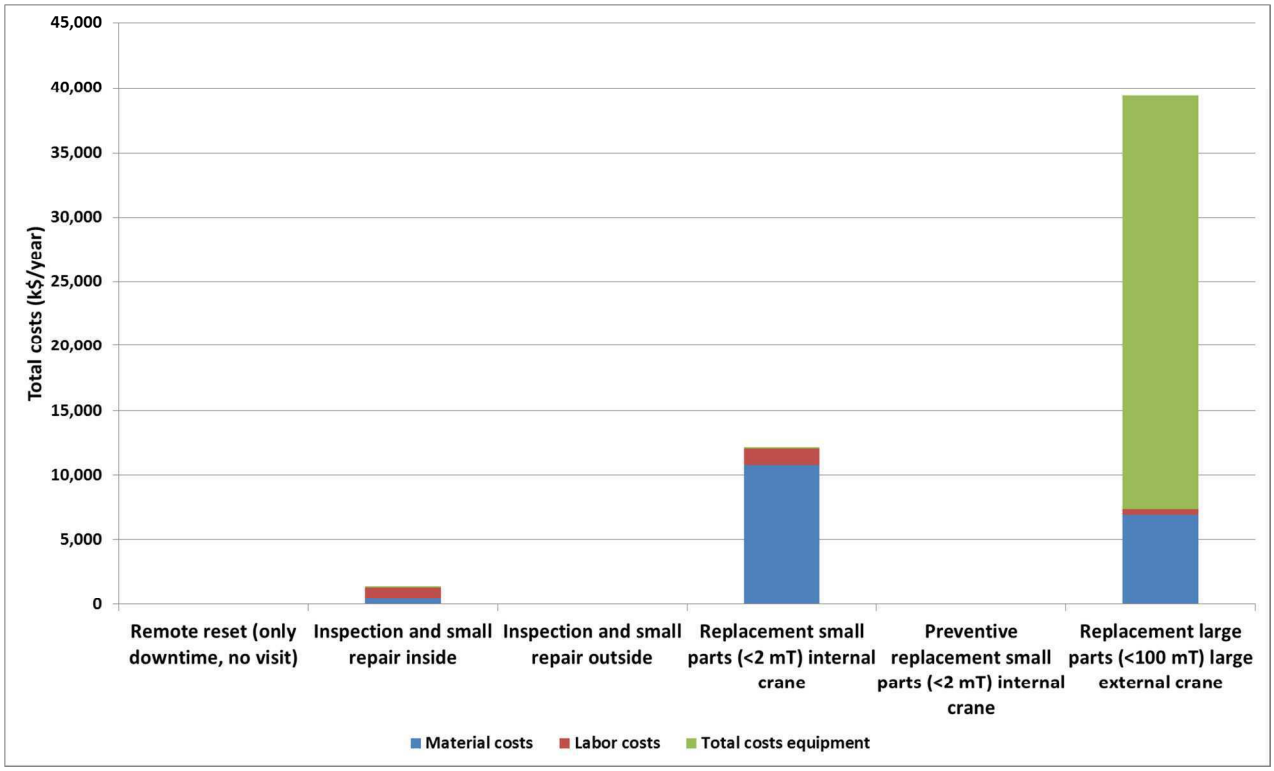

Figure 4. Average annual corrective wind turbine maintenance cost by repair type

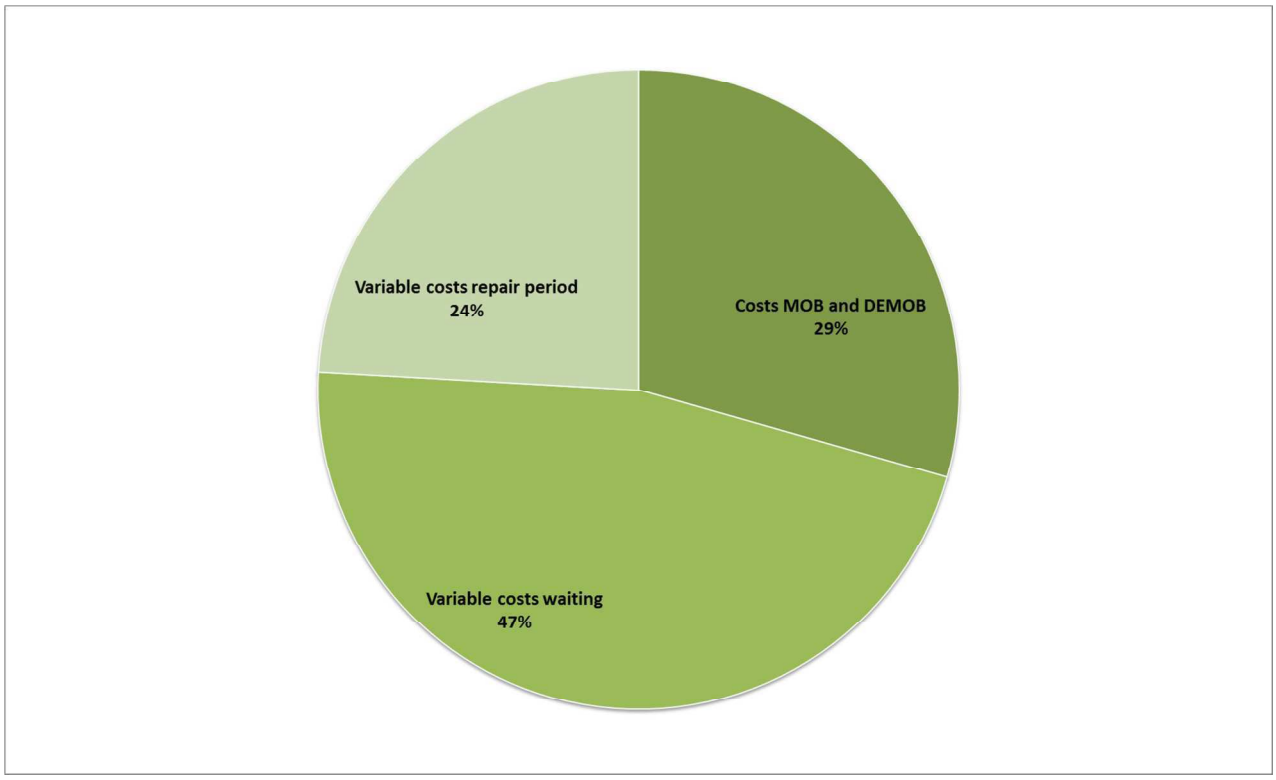

Figure 5. Equipment costs for the replacement of large turbine parts

The second noteworthy driver of CWTM cost is the maintenance material cost, which includes the cost of replacement parts. This cost can be better understood by breaking down the material costs by wind turbine component. Figure 6 shows that the drivetrain contributes the most annual average cost for replacement parts. Innovations focusing on improved reliability for these components could reduce the number of component replacements, thereby reducing material costs and the need the travel to the wind plant.

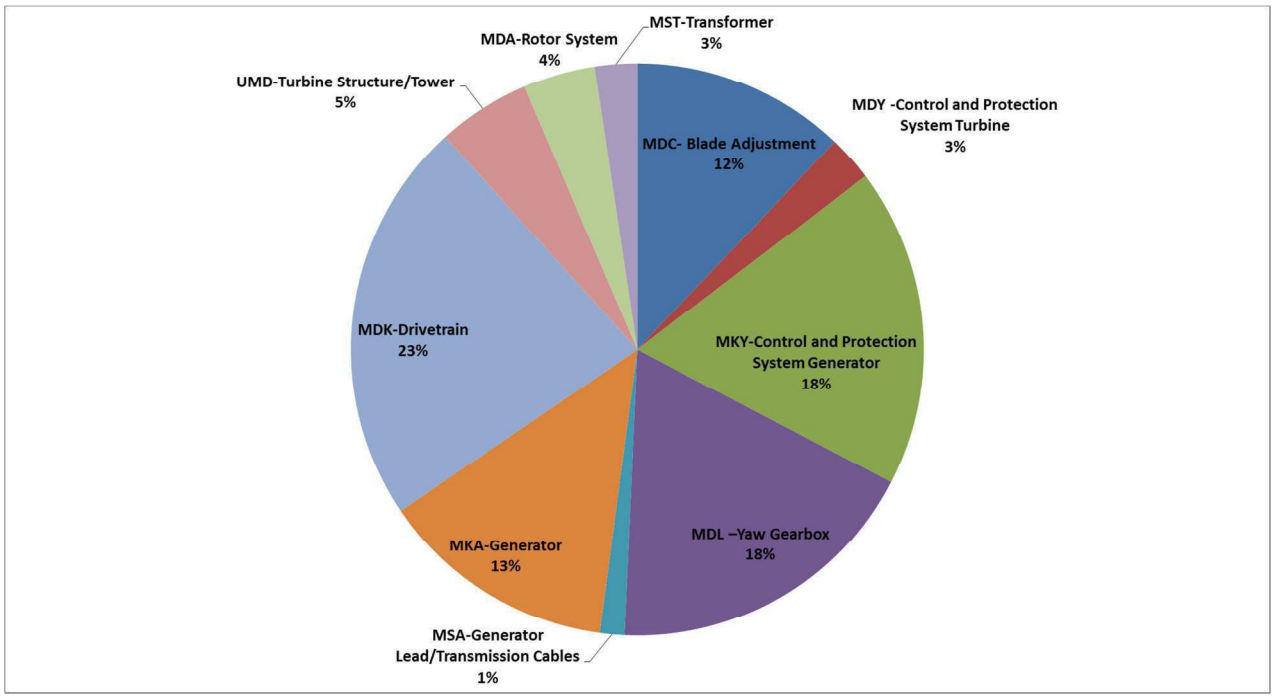

Note: Wind turbine components are labeled based on the RDS-PP taxonomy (Müller et al. 2012).

Figure 6. Percentage breakdown of annual material costs by wind turbine assembly for all repair types

2.2. Operations and Maintenance Primary Downtime Drivers

CWTM is the primary driver for O&M costs and for O&M downtime. The downtime can be broken down into four contributing factors:

- **Waiting time:** The time when the repair crew cannot depart for travel because of poor weather conditions
- **Logistical time:** The time that elapses before the personnel, equipment, and spare parts are ready to travel to the turbine for repair; also includes vessel mobilization time
- **Repair time:** The time it takes to complete the repair
- **Travel time:** The time it takes for the access vessel to travel from the port to the turbine and back for repair.

A useful way of identifying the primary drivers for O&M downtime is to consider the downtime associated with each of the defined turbine repair categories, as shown in Figure 7. Turbine inspection and small repairs is the largest contributor to the annual average CWTM downtime. The downtime for these small repairs is driven by the waiting time accrued by the workboats that cannot depart because

of poor weather conditions. The impact of minor failures offshore will have a large impact on downtime due to site accessibility challenges and, as a result, increase the O&M cost.

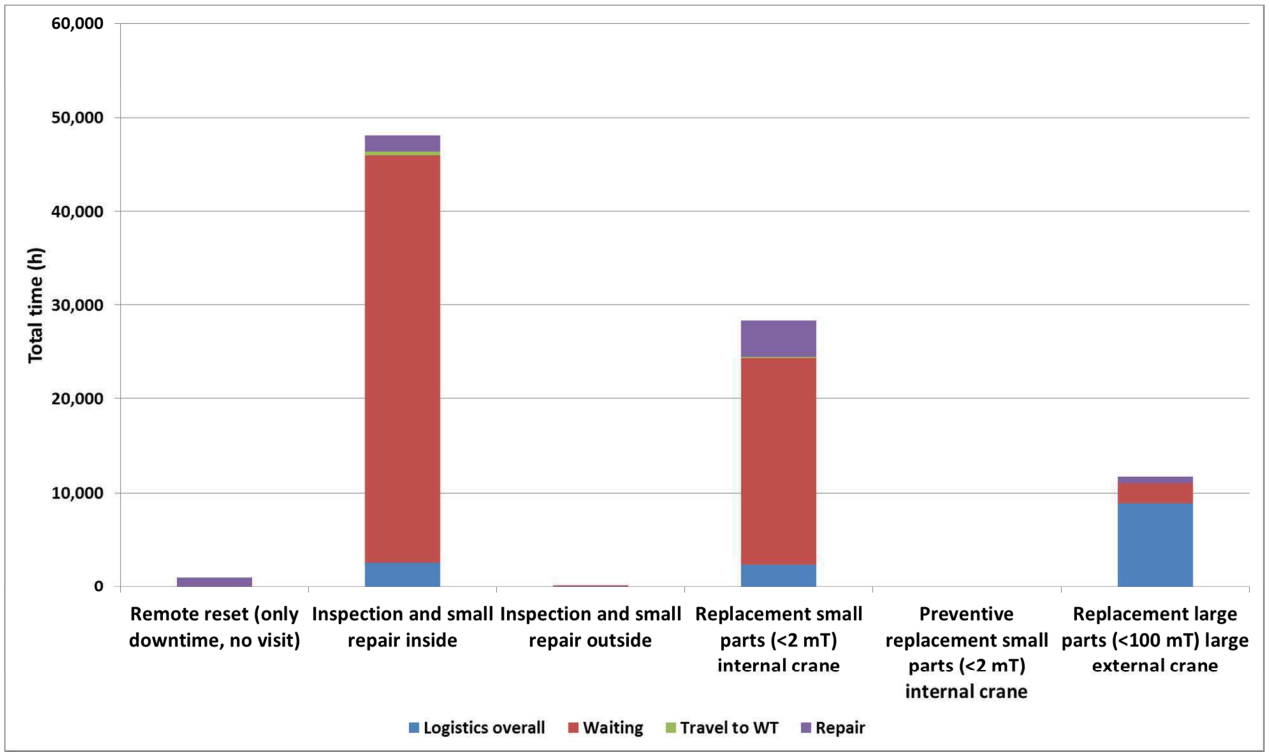

Figure 7. Average annual corrective wind turbine maintenance downtime by repair category

Assessment of new turbine accessibility strategies such as helicopters and ice-breaking tugs may significantly reduce offshore O&M downtime and costs.

3. Impact of Hypothetical Operations and Maintenance Proposed Innovations

This report assesses two strategies to reduce the cost and downtimes associated with offshore O&M activities in the Lake Erie. The first considered a helicopter and the second considered an ice-breaking tug strategy to access the wind farm during the winter and spring months. The methodology, assumptions, and results for each of these strategies are explained in the sections below.

3.1. Helicopter Operations and Maintenance Strategy

Waiting time for O&M activities is a driver for turbine downtime. A potential solution to reduce the waiting time for repair is to consider a helicopter transportation strategy. The helicopter is used to fly in technicians in the winter months for turbine inspections and small internal turbine repairs. The helicopter restricts the replacement of small components (less than 2 mT). Large turbine repairs during the winter and spring months are assumed only possible when the lake water ice content is less than 10%. The helicopter strategy essentially eliminates the wave and ice limitations that restrict turbine access using a workboat. However, using a helicopter to access the turbine is assumed to limit maintenance activities to turbine inspections and small repairs inside the turbine. Also it is assumed that the turbine will incorporate a landing pad for personnel to be dropped from the helicopter and the helicopter is based at the Ashtabula County Airport approximately 43 km from the site. No added cost

was considered into the model for this assumption. The helicopter O&M strategy for wind turbine access is conducted to consider the impacts on availability and downtime for the baseline scenario.

NREL used best estimates in combination with estimates from helicopter supply companies, ECN, and currently available data for helicopter transportation time, lease rates, and weather limitations to calculate the O&M cost and downtime. Table 7 gives details on helicopter specification assumptions.

Table 7. Helicopter Specifications[a]

Helicopter	Maximum Wind Speed (m/s)	Maximum Wave Height (m)	Maximum Ice Coverage (%)	Lease Rate (k$/season)[b]	Mobilization Time (h)	Mob/Demob Cost ($/mission)	Travel Time (h)[c]
Helicopter	12	-	-	$548	0 (leased)	0 (leased)	1.4

[a] Detailed helicopter specifications and costs were obtained from NREL best estimates, estimates from the ECN O&M tool Case Study (van der Zee and Obdam 2011), and discussions with the U.S. helicopter supply companies.
[b] Seasons are considered to be 3 month intervals. The winter months are considered December, January, and February and the spring months are considered March, April, and May.
[c] Travel time is the time to travel from staging airport to the wind site for a one-way trip and includes the time for the technicians to access the turbine from the helicopter. Travel will be done four times per mission, once to drop off the crew and return to the O&M base, then to pick up the crew.
Note: Additional costs are included in the ECN O&M tool not listed in the table (e.g., helicopter fuel costs). Fuel costs for the helicopter were estimated from the Ocean City Airport fuel costs in 2012.

The results for the helicopter scenario are shown in Table 8. It is shown that using a helicopter during the winter months (i.e., December, January, and February) negatively impacts the wind plant availability. The helicopter strategy reduces the annual availability by about 0.7% as compared to a workboat strategy. The increase in wind farm downtime is because of the additional transportation time for turbine inspections and small internal repairs the helicopter accrues. The helicopter is assumed to return to the air base (i.e., Ashtabula County Airport) after the technicians are dropped off for the repair or inspection and return for pick-up after the inspection or repair completion. Even though the helicopter has a faster transit speed (i.e., estimated 220 km/hr) and does not have ice restriction it has a negative impact on the wind farm availability. An additional 0.5 hours was estimated for technicians to access the turbine and then an additional 0.5 hours to get back onboard the helicopter was consider.

The average annual cost for the helicopter O&M strategy is estimated to be $0.054/kWh. The cost of using a helicopter has minimal impact on the O&M cost as compared to using a workboat. The slight additional cost is contributed by the assumed higher lease rate and additional costs for travel. Better understanding of helicopter strategy, lease costs, and contract details could potentially reduce O&M costs and perhaps significantly increase the wind farm annual availability.

A reduction in the annual energy production (AEP) is reduced from 1,218,000 MWh using a workboat to 1,204,000 MWh using a helicopter strategy increasing the projects LCOE. The helicopters limitation to only conducting turbine inspections and small internal repairs limits the wind farm energy production. Alternative methods such as ice-breaking tugs could potentially allow replacement of small (less than 2 mT) and large (greater than 2 mT) by transporting components by sea and creating access ways for purpose-built TIVs to conduct large repairs.

Table 8. Summary of O&M Results - Helicopter Strategy (winter months)

Summary of downtime and costs		Availability [%]	86.9%
Location	Lake Erie - 5 MW	Costs [$ ct/kWh]	5.36
Type of WT	NREL 5 MW Offshore Turbine	Total effort [M$]	93.9

ECN O&M Tool 4.4

Wind farm	100 turbines		Winter	Spring	Summer	Autumn	Total	Year
Downtime per year								
Corrective WT	Logistics	hr	3,437	3,437	3,437	3,437	13,748	13,748
	Waiting	hr	61,060	11,546	42	916	73,565	69,201
	Travel	hr	195	143	143	143	624	572
	Repair	hr	1,881	1,826	1,747	1,826	7,281	7,305
	TOTAL corrective WT	hr	66,573	16,952	5,369	6,322	95,217	90,825
Corrective BOP	Logistics	hr	2,003	2,003	2,003	2,003	8,014	8,014
	Waiting	hr	6,666	1,300	5	91	8,061	7,789
	Travel	hr	11	11	11	11	45	45
	Repair	hr	261	228	203	228	920	912
	TOTAL corrective BOP	hr	8,941	3,543	2,222	2,333	17,039	16,760
Preventive	**TOTAL preventive**	hr	0	924	1,452	264	2,640	2,640
	TOTAL	hr	**75,514**	**21,419**	**9,043**	**8,920**	**114,896**	**110,226**
Availability		%	65.5%	90.2%	95.9%	95.9%	86.88%	87.4%
Loss of production per year		MWh	178,896	31,830	7,230	17,086	235,043	182,507
Energy production per year		MWh	339,924	293,615	167,871	402,414	1,203,824	1,267,939
Revenue losses per year		k$	**22,362**	**3,979**	**904**	**2,136**	**29,380**	**22,813**
Costs of repair per year								
Material costs								
Corrective WT	**TOTAL corrective WT**	k$	4,512	4,512	4,512	4,512	18,048	18,048
Corrective BOP	**TOTAL corrective BOP**	k$	15	15	15	15	61	61
Preventive	**TOTAL preventive**	k$	0	569	894	162	1,625	1,625
	TOTAL	k$	**4,527**	**5,096**	**5,421**	**4,690**	**19,733**	**19,733**
Labour costs								
Corrective WT	**TOTAL corrective WT**	k$	725	686	684	686	2,781	2,744
Corrective BOP	**TOTAL corrective BOP**	k$	1	1	1	1	3	3
Preventive	**TOTAL preventive**	k$	0	346	530	99	975	988
	TOTAL		**726**	**1,033**	**1,215**	**786**	**3,759**	**3,735**
Costs equipment								
Corrective WT	MOB/DEMOB	k$	2,363	2,363	2,363	2,363	9,453	9,453
	Waiting	k$	11,020	2,512	709	709	14,950	14,179
	Repair	k$	1,991	1,937	1,936	1,937	7,801	7,747
	TOTAL corrective WT	k$	15,375	6,812	5,008	5,009	32,204	31,379
Corrective BOP	MOB/DEMOB	k$	390	390	390	390	1,558	1,558
	Waiting	k$	853	178	55	59	1,145	1,176
	Repair	k$	228	226	226	226	905	903
	TOTAL corrective BOP	k$	1,471	793	670	674	3,608	3,636
Preventive	**TOTAL preventive**		0	506	694	144	1,344	1,444
	TOTAL		**16,845**	**8,111**	**6,373**	**5,827**	**37,157**	**36,460**
Corrective WT		k$	**20,611**	**12,010**	**10,204**	**10,207**	**53,033**	**52,170**
Corrective BOP		k$	**1,487**	**809**	**686**	**690**	**3,672**	**3,700**
Preventive		k$	**0**	**1,420**	**2,118**	**406**	**3,944**	**4,057**
Fixed yearly costs		k$	**1,387**	**840**	**840**	**840**	**3,906**	**4,819**
Total costs of repair		k$	**23,485**	**15,079**	**13,849**	**12,142**	**64,555**	**64,747**
Total cost per kWh		$ cent/kWh	**6.91**	**5.14**	**8.25**	**3.02**	**5.36**	**5.11**
Total costs of repair per kW installed		$/kW	**47**	**30**	**28**	**24**	**129**	**129**
Total cost per kW investment			**2.4%**	**1.5%**	**1.4%**	**1.2%**	**6.6%**	**6.7%**
Total effort								
Sum revenue losses & total costs of repair		k$	**45,847**	**19,058**	**14,752**	**14,278**	**93,936**	**87,560**

3.2. Ice-Breaking Operations and Maintenance Strategy

Another O&M strategy that could potentially reduce the waiting time from poor weather conditions is the use of ice-breaking tug to access turbines. There are various types of ice-breaking vessels on the market including conventional ice-breakers, ice-breaking tugs/supply/research vessels, ice-strengthened

passenger/car ferries, and ice-strengthened cargo vessels. For access to the Lake Erie wind farm we considered the use of ice-breaking tugs to access the turbines for CWTM.

This strategy not only allows for expanded weather windows to access the wind plant for turbine inspection and small repairs but assumes the capability to conduct large wind turbine repairs during the winter months. This is accomplished by the ice-breaking tug's overdesigned hull for breaking ice to assist the navigation of a purpose-built TIV to gain access to the turbine. This analysis assumes a purpose-built TIV is able to perform large turbine repairs in iced conditions. Further investigation of purpose-built TIVs conducting large turbine repairs in iced conditions should be considered (e.g. ice loading on the jack-up legs). The ice-breaking tug considered for this analysis has a length overall (LOA) of 74 ft and a horsepower range of 2800 hp to 3200 hp. An ice-breaking tug is capable of traveling in about 15.2 cm of ice thickness. The maximum average ice thickness in Lake Erie has been reported to be about 32 cm (Driedger-Marschall et al. 2009). Since the correlated ice data for Lake Erie is reported in percentage ice cover the assumption that the ice-breaking tug could operate in ice coverage less than 50%. Ice data including ice thickness or developed correlation methods between percent ice cover and ice thickness would increase the accuracy of ice-breaking tug limitations. Future work in this area should be considered to potentially improve model results.

As an ice-breaking tug approaches the foundation of a turbine with ice present there is potential for the ice to damage the turbine foundation by ice crushing into the foundation. For this analysis it was assumed that there is no damage to the turbine foundation for turbine access using an ice-breaking tug. Further investigation of potential damages to wind turbine foundations during vessel approach should be considered.

NREL used best estimates developed from conversations with marine towing companies, estimates provided by ECN's O&M tool case study, and currently available data for ice-breaking tug transportation time, lease rates, and weather limitations to calculate the O&M cost and downtime. Table 9 gives details on the ice-breaking tug specification assumptions.

Table 9. Ice-breaking Tug Specifications[a]

Vessel	Maximum Wind Speed (m/s)	Maximum Wave Height (m)	Maximum Ice Coverage (%)	Lease Rate (k$/season)[b]	Mobilization Time (h)	Mob/Demob Cost ($/mission)	Travel Time (h)[c]
Ice-breaking Tug	12	1.5	50	$553	-	-	1.7

[a] Detailed vessel specifications and costs were obtained from NREL best estimates and discussions with the U.S. marine companies.
[b] Seasons are considered to be 3 month intervals. The winter months are considered December, January, and February and the spring months are considered March, April, and May.
[c] Travel time is the time to travel from port to site for a one-way trip and includes the time for the technicians to access the turbine from the access vessel.
Note: Additional costs are included in the ECN O&M tool not listed in the table (e.g., fuel costs). Fuel costs for the ice-breaking tug were estimated using ECN's North Sea case study converted to U.S. dollars.

The results using an ice-breaking tug instead of a workboat in the winter months are shown in Table 10.

Using an ice-breaking tug shows a decrease in wind plant availability going from 87.6% using workboats to 87.8%. The increase in availability is from the reduction in waiting time for the ice-breaking tug despite the slower estimated average transportation speed of 10 km/hr. Improving the transportation speed on ice-strengthened vessels has the potential to increase wind farm availability for regions with ice. Further increasing the tug's ability to deal with greater ice thicknesses would also further increase availability. The use of a vessel with ice-breaking capabilities similar to the U.S. Coast Guard's Mackinaw would essentially eliminate the waiting time associated with ice conditions on Lake Erie but is expected to increase cost.

The increase in availability comes with a price. The increase in cost from $0.053/kWh using a workboat to $0.055/kWh is a result of the increase in leasing cost for the ice-breaking tug during the winter compared to the workboat lease. The estimated lease cost of $553,000/season for the ice-breaking tug was calculated using a generic hourly contract rate and is expected to decrease with a more project specific vessel contract.

Using an ice-breaking tug in the winter months increases the annual wind farm AEP. The higher AEP of 1,224,000 MWh using the ice-breaking tug compared to the 1,218,000 MWh using a workboat is possible by expanding the good weather windows for turbine repair and replacement of small and large components. O&M strategies that improve AEP positively impact the overall LCOE by lowering the cost of energy. Increasing an ice-breaking tugs capability for breaking ice will continue to drive higher AEP. Further study on ice-breaking vessel capabilities should be investigated.

Additional analysis is recommended for using an ice-breaking tug for both the winter and spring months due to the late ice seasons experienced on Lake Erie. It is predicted that results for using an ice-breaking vessel will increase the wind farm availability while also increasing the O&M costs. An optimization study for ice-breaking strategies, vessel contracts, and costs could potentially further reduce the O&M costs using an ice-breaking tug.

Table 10. Summary of O&M Results - Ice-breaking Tug Strategy (winter months)

Summary of downtime and costs		Availability [%]	87.8%
Location	Lake Erie - 5 MW	Costs [$ ct/kWh]	5.54
Type of WT	NREL 5 MW Offshore Turbine	Total effort [M$]	94.7

ECN O&M Tool 4.4

Wind farm		100 turbines	Winter	Spring	Summer	Autumn	Total	Year
Downtime per year								
Corrective WT	Logistics	hr	4,532	3,437	3,437	3,437	14,843	13,748
	Waiting	hr	50,595	11,546	42	916	63,100	63,201
	Travel	hr	273	143	143	143	702	572
	Repair	hr	2,795	1,826	1,747	1,826	8,195	7,305
	TOTAL corrective WT	hr	58,196	16,952	5,369	6,322	86,840	90,825
Corrective BOP	Logistics	hr	2,003	2,003	2,003	2,003	8,014	8,014
	Waiting	hr	6,666	1,300	5	91	8,061	7,789
	Travel	hr	11	11	11	11	45	45
	Repair	hr	261	228	203	228	920	912
	TOTAL corrective BOP	hr	8,941	3,543	2,222	2,333	17,039	16,760
Preventive	**TOTAL preventive**	hr	0	924	1,452	264	2,640	2,640
	TOTAL	hr	**67,137**	**21,419**	**9,043**	**8,920**	**106,519**	**110,226**
Availability		%	69.3%	90.2%	95.9%	95.9%	87.8%	87.4%
Loss of production per year		MWh	159,050	31,830	7,230	17,086	215,197	182,507
Energy production per year		MWh	359,770	293,615	167,871	402,414	1,223,670	1,267,939
Revenue losses per year		k$	**19,881**	**3,979**	**904**	**2,136**	**26,900**	**22,813**
Costs of repair per year								
Material costs								
Corrective WT	**TOTAL corrective WT**	k$	4,512	4,512	4,512	4,512	18,048	18,048
Corrective BOP	**TOTAL corrective BOP**	k$	15	15	15	15	61	61
Preventive	**TOTAL preventive**	k$	0	569	894	162	1,625	1,625
	TOTAL	k$	**4,527**	**5,096**	**5,421**	**4,690**	**19,733**	**19,733**
Labour costs								
Corrective WT	**TOTAL corrective WT**	k$	901	686	684	686	2,957	2,744
Corrective BOP	**TOTAL corrective BOP**	k$	1	1	1	1	3	3
Preventive	**TOTAL preventive**	k$	0	346	530	99	975	988
	TOTAL		**902**	**1,033**	**1,215**	**786**	**3,935**	**3,735**
Costs equipment								
Corrective WT	MOB/DEMOB	k$	4,726	2,363	2,363	2,363	11,816	9,453
	Waiting	k$	9,602	2,512	709	709	13,532	14,179
	Repair	k$	3,461	1,937	1,936	1,937	9,271	7,747
	TOTAL corrective WT	k$	17,789	6,812	5,008	5,009	34,619	31,379
Corrective BOP	MOB/DEMOB	k$	390	390	390	390	1,558	1,558
	Waiting	k$	853	178	55	59	1,145	1,176
	Repair	k$	228	226	226	226	905	903
	TOTAL corrective BOP	k$	1,471	793	670	674	3,608	3,636
Preventive	**TOTAL preventive**		0	506	694	144	1,344	1,444
	TOTAL		**19,260**	**8,111**	**6,373**	**5,827**	**39,572**	**36,460**
Corrective WT		k$	**23,203**	**12,010**	**10,204**	**10,207**	**55,624**	**52,170**
Corrective BOP		k$	**1,487**	**809**	**686**	**690**	**3,672**	**3,700**
Preventive		k$	**0**	**1,420**	**2,118**	**406**	**3,944**	**4,057**
Fixed yearly costs		k$	**1,762**	**931**	**931**	**931**	**4,555**	**4,829**
Total costs of repair		k$	**26,452**	**15,171**	**13,940**	**12,233**	**67,795**	**64,757**
Total cost per kWh		$ cent/kWh	**7.35**	**5.17**	**8.30**	**3.04**	**5.54**	**5.11**
Total costs of repair per kW installed		$/kW	**53**	**30**	**28**	**24**	**136**	**130**
Total cost per kW investment			**2.7%**	**1.6%**	**1.4%**	**1.3%**	**7.0%**	**6.7%**
Total effort								
Sum revenue losses & total costs of repair		k$	**46,333**	**19,149**	**14,844**	**14,369**	**94,695**	**87,570**

4. Conclusions

A summary of the availability and costs for the three scenarios are shown in Table 11. Details for each of the scenarios are explained following the summary table of results.

Table 11. Summary of Results for Improved Operations and Maintenance Scenarios

Baseline Operation and Maintenance Scenarios	Availability (%)	Costs ($/kWh)	Annual Energy Production (MWh)
Workboat	87.6	0.053	1,218,000
Helicopter	86.9	0.054	1,204,000
Ice-breaking tug	87.8	0.055	1,224,000

The O&M costs for the Lake Erie baseline project using a standard workboat were estimated to be approximately $0.053/kWh. Of the total O&M costs, a large fraction is accrued from the CWTM, which contributes approximately 83% of the total O&M costs. The primary driver for CWTM is the cost of using a purpose-built TIV for replacing large turbine components. The availability for the baseline site is estimated to be 87.6%. The CWTM drives the O&M downtime by contributing about 82% of total O&M downtime. The annual average CWTM downtime is driven by the waiting time for workboats to conduct inspections and repair small wind turbine components.

The cost for using a helicopter for turbine inspections and small repairs during the winter months increased the annual cost of O&M to $0.054/kWh. The higher costs are driven by the increased lease cost of the helicopter, relative to the workboat, for the winter. Although the helicopter eliminates the wave and icing constraints to transportation of personnel, the additional transportation time and distance to drop off and pick of the technicians for only conducting inspections or small internal turbine repairs increases the waiting time for a good weather window. Therefore, there is a negative effect on the wind farm availability dropping from 87.6% using workboats to an estimated 86.9%. The drop in estimated AEP from 1,218,000 MWh using workboats to 1,204,000 MWh will have a negative impact on the project's LCOE.

Using an ice-breaking tug for O&M activities in the winter months increases the annual availability of the wind plant to approximately 87.8%. This scenario results in a significant decrease in waiting time for good weather windows to conduct corrective wind turbine maintenance. However, the increase of availability comes with an increase in annual O&M cost of $0.055/kWh. The higher cost is driven by the higher estimated lease cost for the ice-breaking tug relative to the workboat. The increase in ice-breaking limitations for ice-breaking tugs or the use of a purpose designed ice-breaking vessel could essentially eliminate the ice restriction on Lake Erie and significantly increase availability. If the ice restriction is no longer a constraint for an ice-breaking vessel with the assumption that the purpose-built TIV can conduct large repairs in iced conditions there is potential to reach availability of approximately 96%. An optimization study for using ice-breaking vessel with higher ice-breaking capabilities should be considered to understand costs. Additional analysis on purpose-built TIV or jack-up vessels operating in iced conditions must be considered for this scenario. An increase in this scenario's AEP from 1,218,000 MWh utilizing workboats to 1,224,000 MWh will lower the project's LCOE.

Other innovations such as the use of snowmobiles and hoover crafts during the icing season should not be overlooked. Further investigation on these potential innovative alternatives for accessing wind turbines for repair may reflect a high impact on O&M downtime and cost by reducing the waiting time

associated with ice. The assessment of these methods would require more analysis than was planned for this study.

5. Recommendations for Future Operations and Maintenance Analysis

The Lake Erie O&M analysis requires further investigation in a number of areas. The areas recommended for future analysis follow:

- Obtain data for ice thickness or develop a correlation method using percent ice coverage to more accurately model ice-breaking tug access limitations.
- Conduct analysis on additional ice scenarios to gain a better sense of the O&M costs as a function of ice coverage and help inform the value of alternative turbine access options.
- Partner with a wind industry owner operator or an OEM to better understand offshore wind turbine and BOS failure frequency and repair strategies.
- Better understand vessel strategies, contracting strategies, day rate costs, and mobilization/demobilization costs for projects in the United States including ice-breaking tug. More clarity in these areas might provide more accurate cost and downtime estimates for offshore O&M. This would allow identification of areas in which to focus efforts to reduce O&M costs.
- Better understand helicopter strategies, contacting strategies, day rate costs, and mobilization/demobilization costs for offshore wind projects in the U.S.
- Investigate suitable repair strategies to reduce dependencies on expensive purpose-built TIVs.
- Conduct research on advanced vessel technologies that allow for fewer restrictions on wave and wind climates to reduce the downtime for offshore O&M activities.
- Discuss different turbine technology options such as blade de-icing and Conditional Monitoring Systems to assist in lowing the downtimes, increasing AEP, and plan O&M activities accordingly.
- Carry out additional studies on regional climate variations such as wind and wave characteristics to further understand how these site climates affect site O&M costs and downtime.

References

Assel, R. (2003). National Oceanic and Atmospheric Administration. Great Lakes Ice Atlas. Accessed July 2013: http://www.glerl.noaa.gov/data/ice/atlas/

Douglas-Westwood. (2013). "Assessment of Vessel Requirement for U.S. offshore Wind Sector." Draft Report for DOE Offshore Wind Removing Market Barriers FOA.

Driedger-Marschall, B.; Endres, P.; Krueger, R.; van den Bruck, C. (2009). "Great Lakes Wind Energy Center Feasibility Study." juwi GmbH.

Maples, B.; Saur, G.; Hand, M.; and van de Pietermen, R.; Obdam, T. (2013). "Installation, Operation, and Maintenance Strategies to Reduce the Cost of Offshore Wind Energy." http://www.nrel.gov/docs/fy13osti/57403.pdf.

Müller, H.; Hantschel, J.; Seiffert, J.; Fröhner, J.; Brauksiepe, M. (2012). *Reference Designation System for Power Plant (RDS-PP) Wind Energy.* VGB PowerTech e.V. Accessed June 2013: http://www.vgb.org/vgbmultimedia/AKADNEU/VGB_S_823_T32_EN_2012_02_03_Draft_Final1.pdf.

Obdam, T.S.; Braam, H.; and Rademakers, L.W.M.M;. (2010). *ECN O&M Tool V.4*. Petten, The Netherlands: ECN.

Tavner, P. (2012). *Offshore Wind Turbines Reliability, availability and maintenance.* The Institution of Engineering and Technology.London. ISBN 978-1-84919-229-3. http://www.theiet.org/resources/books/renewable/offshore.cfm?origin=/books-offshore

U.S. Army Corps of Engineers. (2013). Wave Information Studies. Accessed July 2013: http://wis.usace.army.mil/products.html?staid=92053&lat=41.92000&lon=-81.08000&dep=20.

van der Zee, T.J.J.; Obdam, T.S. (2011). "ECN O&M Tool Case Study for a Far Offshore Wind Farm." Petten, The Netherlands: ECN.

Wilkinson, M.; Hendriks, B.; Spinato, F.; Gomez, E.; Bulacio, H.; Roca, J.; Tavner, P.; Feng, Y.; Long, H. (2010). "Methodology and Results of the Reliawind Reliability Field Study." European Wind Energy Conference 2010, Warsaw, April 20–23. Accessed May 2013. http://www.supergen-wind.org.uk/docs/publications/Wilkinson,%20Hendriks,%20Spinato,%20Gomez,%20Bulacio,%20Roca,%20Tavner,%20Feng,%20Long-EWEC2010.pdf.

Levelized Cost of Energy Summary

Shallow Water Offshore Wind Optimization for the Great Lakes
FOA 415 Topic Area 2

Table of Contents

Table of Contents 1

Overview 2

Cost of Energy Estimates, Baseline and Conceptual Projects 2

Operating Parameters 2

- Turbine Capital Costs 3
- Balance of System Costs 3
- Soft Costs 4
- Annual Operating Expenses 5
- Baseline LCOE Estimate 5

Conclusion 6

References 8

Overview

The "Shallow Water Offshore Wind Optimization for the Great Lakes" project demonstrates how specific innovations and optimizations for offshore wind farms for a given region can affect the Levelized Cost of Energy (LCOE). This document summarizes the associated LCOE for this project leveraging the project innovations.

The project is a study of a holistic offshore wind system optimized for shallow water conditions found in the Great Lakes. Innovations were targeted to deliver at least 25% COE reductions for large-scale offshore wind installations, relative to the baseline LCOE estimate for shallow water installations today. The analysis of both the baseline and hypothetical configurations ("conceptual") will be optimized for the Ohio waters of Lake Erie, which has characteristics representative of the shallow areas of the Great Lakes including ice loading, low hydrodynamic loading, and no tropical storms.

Project work assessed specific innovations required for projects located in the Great Lakes including, Balance of System (BOS) innovations, an optimized rotor design for the lower wind resource, an optimized wind plant layout and innovative O&M strategies that address freshwater ice conditions.

Cost of Energy Estimates, Baseline and Conceptual Projects

The project team benchmarked the cost and performance of hypothetical innovations against baseline technology representing a hypothetical project installed in Lake Erie today. The details of the analysis, tools used, assumptions, and baseline results are found in the Freshwater Baseline Memo located in Appendix 5.

Operating Parameters

Table 1 summarizes the operating parameters for the baseline and conceptual wind farm, which consists of 100 5MW turbines located in Lake Erie off the coast near Ashtabula, Ohio.

Table 1: Operating parameters for baseline turbine and wind farm

Category	Baseline 500 MW Farm
Project Location	42° 4'54.54"N 80°52'45.54"W
Wind Plant Rating (MW)	500
# of Turbines	100
System Design Life (years)	20
Turbine Rating (kW)	5000
Rotor Diameter (m)	126
Hub Height (m)	90
Drivetrain Type	Geared
Foundation Type	Monopile
Distance to Interconnect (km) - Perry	21.6
Distance to O&M Port (km) - Ashtabula	21

Distance to Staging Port (Turbine) (km) - Cleveland	97
Distance to Staging Port (Foundation) (km) - Lorain	130
Water Depth (m)	22
Wind Speed at HH (m/s)	8.3
Weibull K	2.09
Wind Shear	0.11
Air Density (kg/m^3)	1.225
Losses (%)	16.9
Availability (%)	91
Array Spacing (Baseline)	7d (E-W and N-S)
Array Spacing (Conceptual)	8 x 12 Array Offset

Turbine Capital Costs

The NREL offshore 5 MW wind turbine was selected as the offshore baseline turbine configuration because of its wide use internationally as a reference turbine (Jonkman 2009). Turbine subcomponent cost estimates were obtained using the NREL Cost and Scaling model (Fingersh et al., 2006; Maples et al., 2010) along with turbine design parameters from the 5MW Reference Turbine (Table 2). The "Rotor Optimization for the Great Lakes Wind Regime" report details the selection of a 136m rotor for the conceptual project, located in the reports' Appendix 5.

Table 2: Summary of Turbine Capital Costs

Component	Baseline 500 MW Farm ($/kW)	Conceptual 500 MW Farm ($/kW)
Rotor	473	533
Drive train, nacelle	1326	1326
Controls, Safety System and CBM	22	22
Tower	258	301
TOTAL	**2079**	**2182**

Balance of System Costs

The baseline project turbines were founded on monopiles and installed component by component with the tower being installed in two lifts. Turbine installation will be carried out by a self-propelled jack-up vessel with a supporting cast of barges, tugs, and crew transport vessels. The conceptual project with the innovations will use semi-floating Gravity Based Foundation (GBF), which can be launched and transported to the wind farm location without the need for specialized, heavy lift equipment. In addition, NREL completed an optimized layout sensitivity analysis to balance the cost of the Electrical Infrastructure with respect to the AEP, resulting in a lower Electrical Infrastructure cost. A summary of balance of system costs is provided in Table 3, below.

Table 3: Summary of Baseline BOS Costs

Category	Baseline 500 MW Farm ($/kW)	Conceptual 500 MW Farm ($/kW)
Development	291	291
Project Management	117	117
Foundation	661	468
Primary Steel	*338*	*468*
Transition Piece	*228*	*0*
Secondary Steel	*95*	*0*
Ports and Staging	23	23
Storage Fees	*7*	*7*
Entrance/Exit/Docking Fees	*6*	*6*
Craneage	*11*	*11*
Turbine and Foundation Installation	1,160	874
Installation Vessels (Turbine & Foundation)	*454*	*354*
Transportation Vessels	*228*	*142*
291Support Vessels	*86*	*86*
Electrical Installation Vessels	*392*	*392*
Electrical Infrastructure	451	320
Array Cable	*187*	*92*
Offshore Substation & Support Structure	*164*	*61*
Export Cable	*176*	*126*
Land-based Substation & Interconnect	*41*	*41*
TOTAL	**2703**	**2093**

Soft Costs

Soft costs include non-construction costs incurred before project commissioning, and are mainly related to the cost of financial vehicles, including:

- Insurance – insurance to protect against damage to component, accidents and liability during construction. Estimated at 1% of total ICC (Tegen 2012).
- Decommissioning – assumed reverse of installation procedure, but quicker and at lower costs (BVG 2012)
- Contingency – assumed 10% of total ICC (Tegen 2012).

Table 4 includes a summary of the soft costs for the two scenarios.

Table 4: Summary of Baseline Soft Costs

Category	Baseline 500 MW Farm ($/kW)	Conceptual 500 MW Farm ($/kW)
Insurance	52	43
Decommissioning	436	426
Contingency	426	426
TOTAL	**914**	**894**

Annual Operating Expenses

O&M costs are highly dependent on the failure frequency of turbine and BOS components; therefore a set of generic failure frequencies was established for use in both scenarios. Additionally, it was assumed that the following methods, costs and equipment are the most likely option for the transfer of personnel and for making repairs:

- Workboat access vessel (transferring technicians and transporting small components)
- Purpose Built TIV (transporting and hoisting large components)
- Cable layer (replacing cables)
- Diving support vessel (for underwater inspections and repairs)

For the baseline scenario, we assumed that when ice coverage exceeds 10%, the site cannot be accessed for repairs. As described in the "Assessment of Improved Operations and Maintenance Strategies" report, located in Appendix 5 of this report, we included an ice-breaking tug to increase turbine access when ice coverage exceeds 10%.

Results of the O&M scenarios are presented in Table 5, below. All costs for corrective and preventative maintenance include spare parts and the vessels, labor and equipment to perform maintenance/repairs.

Table 5: Summary of Baseline Annual Operating Expenses

Category	Baseline 500 MW Farm ($/kW/year)	Conceptual 500 MW Farm ($/kW)
Corrective Maintenance	130	110
Preventative Maintenance	9	9
Fixed Yearly Costs	10	10
Lease Fees	6	6
Availability	91%	91%
Total	**155**	**129**

Baseline LCOE Estimate

Both the baseline and conceptual scenarios used the LCOE formula as provide in Appendix E of FOA 415:

$$\mathbf{LCOE = ((DR+IWF) \times (TCC + BOS) + O\&M))/ AEPnet}$$

where:

LCOE	Levelized Cost of Energy ($/kWh) (constant dollars)
DR	Discount Rate (1/yr)
IWF	Insurance, Warranty and Fees (1/yr)
TCC	Turbine Capital Cost ($)
BOS	Balance of System Capital Cost ($)
AOE	Annual Operating Expenses ($/yr)
AEPnet	Net Annual Energy Production (kWh/yr)

A summary of the LCOE Analyses is provided in Table 6, below.

Table 6: LCOE Estimate for Baseline Project

Category	Baseline 500 MW Farm	Conceptual 500 MW Farm ($/kW)
Net Annual Energy Production (MWh)	1,599,630	1,750,106
Turbine Capital Cost ($/kW)	2079	2182
Balance of Station Cost ($/kW)	2703	2093
Soft Costs ($/kW)	914	894
Annual Operating Expenses ($/kW/yr)	155	129
Discount Rate	7%	7%
Insurance, Warranty and Fees (IWF)	1%	1%
Installed Capital Cost (ICC) ($/kW)	**5696**	**5169**
Baseline LCOE ($/kWh)	**$0.1715**	**$0.1402**
Total LCOE Improvement		**22.3%**

Conclusion

The overarching objective of the project was to demonstrate how novel considerations for a specific region, the shallow water of the Great Lakes, can reduce the system level costs for wind energy. For this project, the analysis included a detail study of different foundations and installation concepts for the soil composition and shallow waters, a larger rotor for the low wind speed, an optimized layout leveraging cable costs with AEP, and improved operation and maintenance strategy. These innovations reduced the LCOE by 22.3% over the project baseline. Figure 1 shows the waterfall chart demonstrating the changes from the baseline project to the conceptual project and effects of the innovations investigated in the project.

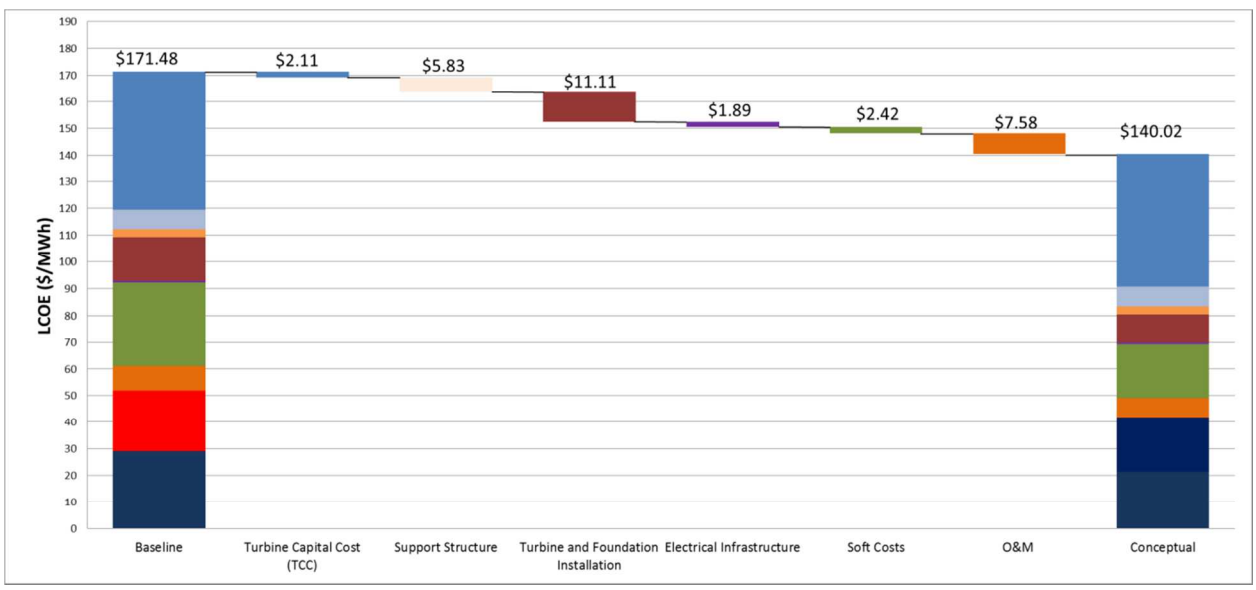

Figure 1: Waterfall Chart of Innovations and Optimizations

The goal of FOA-415 was to lower the LCOE in the Great Lakes by 25%. There are potential areas for continuing analysis that may further reduce the LCOE to, or beyond, the 25% targeted by this study, they include:

- BOS model is under development and may currently underestimate electrical infrastructure costs.
- Monopile cost estimates currently consider simplified soil conditions and models maybe updated to consider additional geotechnical parameters
- Vessel day rate assumptions for a new build TIV based in the Great Lakes came from one source and require further investigation.
- Rotor optimization shows that a turbine that does not have a restriction in either blade tip height or clearance could increase energy production or cost reductions.
- Ice-breaking tugs still have limitations that can be addressed by using United States Coast Guard ice-breakers to further increase access and therefore decrease turbine downtime.
- Investigate suitable repair strategies to reduce dependencies on expensive purpose-built TIVs.
- Conduct research on advanced vessel technologies that allow for fewer restrictions on wave and wind climates to reduce the downtime for offshore O&M activities.
- Carry out additional studies on regional climate variations such as wind and wave characteristics to further understand how these site climates affect site O&M costs and downtime.

Based on the innovations targeted during the "Shallow Water Optimization for the Great Lakes" study, it is reasonable to assume that the reductions in LCOE would be equal to or greater than the reported 22.3% when applying these technological improvements to a shallow water offshore wind farm.

References

Fingersh, L.; Hand, M.; Laxson, A. (2006). "Wind Turbine Design Cost and Scaling Model." NREL/TP-500-40566. Golden, CO: National Renewable Energy Laboratory.

Jonkman, J.; Butterfield, S.; Musial, W.; Scott, G. (2009). "Definition of a 5-MW Reference Wind Turbine for Offshore System Development." NREL/TP-500-38060. Golden, CO: National Renewable Energy Laboratory.

Maples, B.; Hand, M.; Musial, W. (2010). "Comparative Assessment of Direct Drive High Temperature Superconducting Generators in Multi-Megawatt Class Wind Turbines." 40 pp.; NREL Report No. TP-5000-49086.