U.S. Department of Energy
Sunshot Initiative
DOE Award DE-EE-0005438

Bonded Bracket Assembly for Frameless Solar Panels
Final Report
January 30th, 2013

ARaymond TINNERMAN

A.RAYMOND TINNERMAN INDUSTRIAL, Inc.

This material is based upon work supported by the Department of Energy under Award No. DE-EE-0005438.

This report was prepared as an account of work sponsored by an agency of the United States Government. Neither the United States Government nor any agency thereof, not any of their employees, makes any warranty, express or implied, or assumed any legal liability or responsibility for the accuracy, completeness, or usefulness of any information, apparatus, product, or process disclosed, or represents that its use would not infringe privately owned rights. Reference herein to any specific commercial product, process, or service by trade name, trademark, manufacturer, or otherwise does not necessarily constitute or imply its endorsement, recommendation, or favoring by the United States Government or any agency thereof. The views and opinions of authors expressed herein do not necessarily state or reflect those of the United States Government or any agency thereof.

Project Title: Bonded Bracket Assembly for Frameless Solar Panels

Covering Period: 9/1/2011 – 9/31/2012

Date of Report: January 30th, 2013

Recipient: ARaymond Tinnerman

Recipient Contact:
Todd Murray
Phone: (810) 406-5056
Fax: (330) 558-0738
Email: todd.murray@araymond.com

Recipient Team:
Todd Murray – Rayce Americas
Nick Jackson – Rayce Americas
Luc Dupont – ARaymond Tinnerman
Jeff Moser - RayBond

DOE Project Team:
DOE Contracting Officer – Dianna Bobo
DOE Project Officer – Michael Cliggett

Executive Summary

In February 2011 the US Department of Energy announced their new Sunshot Initiative. The Sunshot goal is to reduce the total cost of solar energy systems by about 75 percent before the end of the decade. The DOE estimated that a total installed cost of $1 per watt for photovoltaic systems would be equivalent to 5–6¢/kilowatt hour (kWh) for energy available from the grid. The DOE also estimated that to meet the $1 per watt goal, PV module costs would need to be reduced to $.50 per watt, balance of systems costs would need to be reduced to $.40 per watt, and power electronic costs would need to reach $.10 per watt. To address the BOS balance of systems cost component of the $1 per watt goal, the DOE announced a funding opportunity *called (BOS-X) Extreme Balance of System Hardware Cost Reductions.* The DOE identified eight areas within the total BOS costs: 1) installation labor, 2) installation materials, 3) installation overhead and profit, 4) tracker, 5) permitting and commissioning, 6) site preparation, 7) land acquisition, 8) sales tax. The BOS-X funding announcement requested applications in four specific topics:

Topic 1: Transformational Building Integrated Photovoltaic (BIPV) Modules
Topic 2: Roof and Ground Mount Innovations
Topic 3: Transformational Photovoltaic System Designs
Topic 4: Development of New Wind Load Codes for PV Systems

The application submitted by ARaymond Tinnerman reflected the requirements listed in *Topic #2, Roof and Ground Mount Innovations*. The goal of topic #2 was to develop technologies that would result in the extreme reduction of material and labor costs associated with applications that require physical connections and attachments to roof and ground mount structures. The topics researched in this project included component cost reduction, labor reduction, weight reduction, wiring innovations, and alternative material utilization. The project objectives included:

1) The development of an innovative quick snap bracket assembly that would be bonded to frameless PV modules for commercial rooftop installations.

2) The development of a composite pultruded rail to replace traditional racking materials.

3) In partnership with a roofing company, pilot the certification of a commercial roof to be solar panel compliant, eliminating the need for structural analysis and government oversight resulting in significantly decreased permitting costs.

4) Reduce the sum of all cost impacts in topic #2 from a baseline total of $2.05/watt to $.34/watt.

Budget Period	DOE Funding	ARTI Funding	Total
1	$420,000	$105,000	$525,000
2	$625,000	$625,000	$1,250,000
3	$625,000	$625,000	$1,250,000
Total	$1,670,000	$1,355,000	$3,025,000

Table of Contents

Executive Summary……..2

Task 1 (Proof of concept budget period 1) : Component Concept Designs……4

Task 2 (Proof of concept budget period 1) : Prototype Development……..40

Task 3 (Proof of concept budget period 1) Prototype Validation……..41

Deliverables……..46

Task 1: Component Concept Design (Budget Period 1)

Task objective:

Develop primary system design direction and finalize component specific designs.

Highlights:

The proof of concept activity took place primarily at Rayce Americas in Auburn Hills,MI. Initially research was conducted to gather information from select glass/glass PV module manufactures, current mounting/racking manufacturers and various trade sources to gage the current challenges and opportunities in the industry as they relate to topic #2, *"Roof and Ground Mount Innovations*". Although permitting activity was not scheduled until budget period three, the initial interaction with PV professionals included discussions on permitting opportunities so that component concepts would include features that will eventually contribute to lowering permitting costs. As a result of the study, numerous potential system designs were considered. The benefits and trade offs for each concept were evaluated and systems were chosen based on component feasibility, component/labor costs, and assumptions made in the original grant application.

Chosen System Designs:

1*) Bonded Bracket w/ Pultrusion* – The system includes (4) metal brackets bonded to glass/glass PV modules. The metal brackets snap into composite pultruded rail that is supported by vacuum formed HDPE bases. The system is ballasted and intended for flat commercial roofs.

2) *Bonded Bracket w/o Pultrusion* - The system includes (4) metal brackets bonded to glass/glass PV modules. The metal brackets snap into vacuum formed HDPE bases. The system is ballasted and intended for flat commercial roofs.

3*) Bonded Bracket / Standing Seam* – The system includes (4) metal brackets bonded to glass/glass PV modules. The metal brackets snap into another metal hinge/snap bracket that is clamped to the seam of a standing seam commercial roof.

System Design #1
Bonded Bracket w/ Pultrusion System

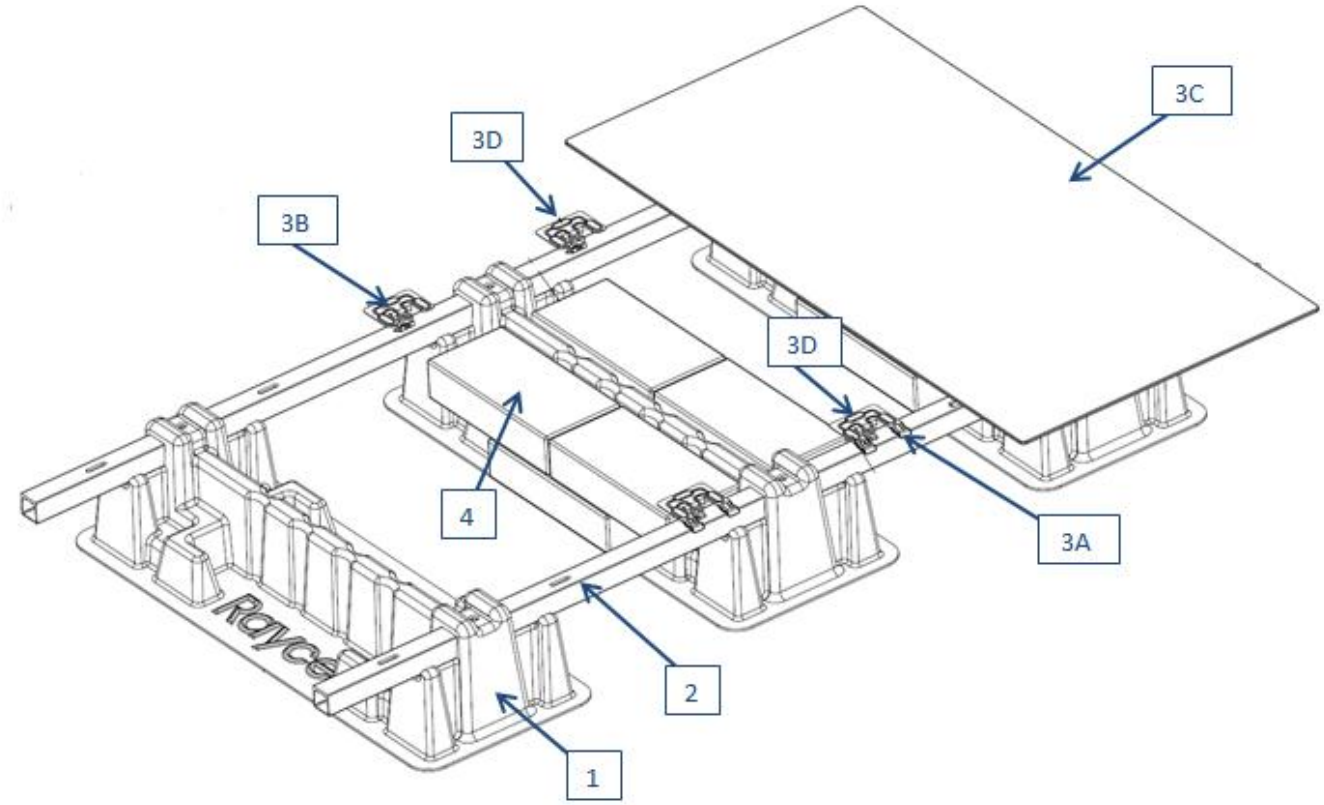

ITEM		DESCRIPTION	PART NUMBER		OVERALL SIZE	MATERIAL	FINISH	COLOR	QUANTITY
1		SUPPORT BASE	RAY-001-2011_1-1A		43.8 x 117.9 x 18.9 cm (17.2 x 46.4 x 7.4 in)	HIGH DENSITY POLYETHYLENE	NONE	BLACK	2-3
2		PULTRUDED RAIL	RAY-001-2011_2-1A		2.5 x 2.5 x 236.2 cm (2 x 2 x 93 in)	POLYURETHANE	NONE	NATURAL	2
SUB-ASSEMBLY 3	3A	BRACKET - HOOK	RAY-001-2011_3-1A SUB-ASSEMBLY	RAY-001-2011_5-1A	44 x 120 x 131.6 mm (1.7 x 4.7 x 5.2 in)	1.0 THK 1050-1065 STEEL	GEOMET	SILVER	6 (2 PER PNL)
	3B	BRACKET - ATTACHMENT		RAY-001-2011_6-1A	71 x 120 x 165.9 mm (2.8 x 4.7 X 6.5 in)	1.0 THK 1050-1065 STEEL	GEOMET	SILVER	6 (2 PER PNL)
	3C	SOLAR PANEL		RAY-001-2011_7-1A	76.2 x 152.4 cm (30 x 60 in)	SUPPORT BASE	NONE	NATURAL	3
	3D	TECHBOND		N/A	AS NEEDED	POLYURETHANE	NONE	BLACK	AS NEEDED
4		BALLAST	RAY-001-2011_4-1A		19.4 x 9.2 x 39.7 cm (3.625 x 7.625 x 15.625 in)	CEMENT	NONE	GRAY	0-6 PER ITEM 1

Bracket (Hinge)

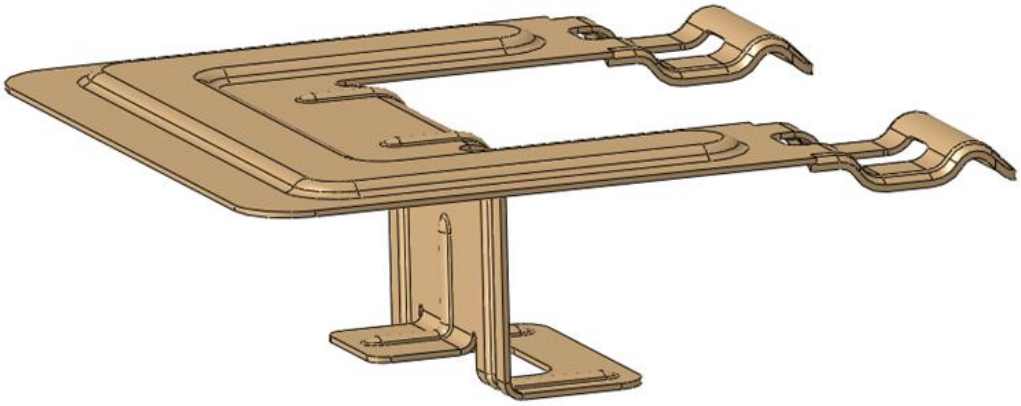

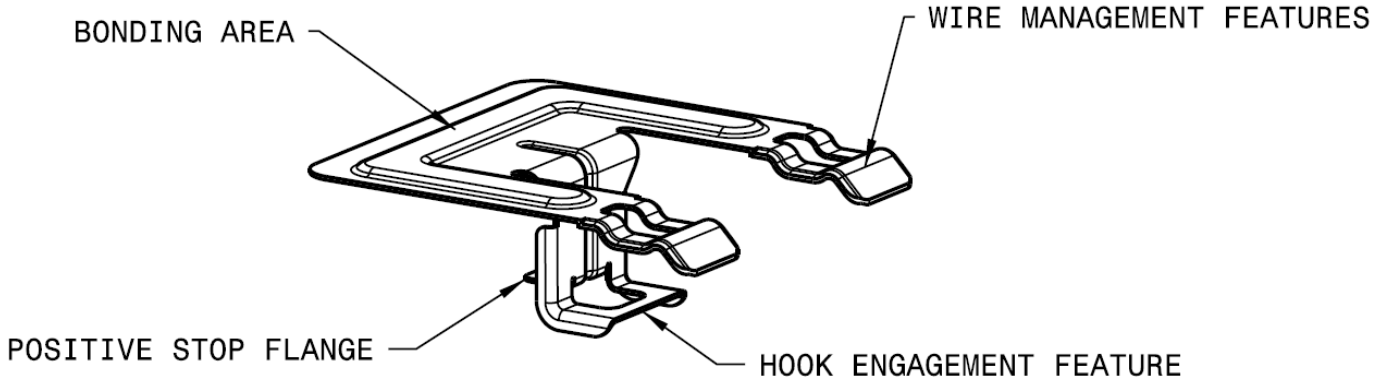

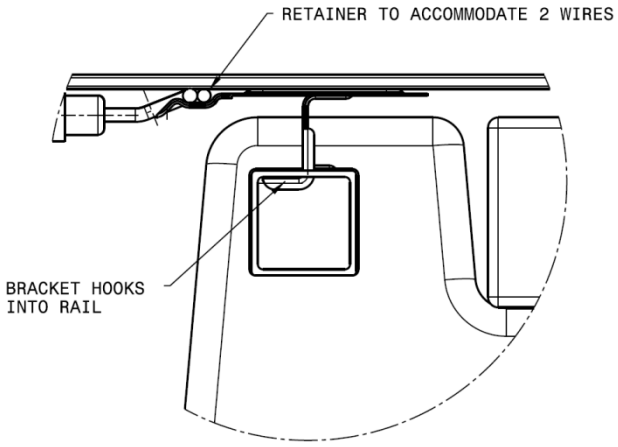

Bracket (Snap)

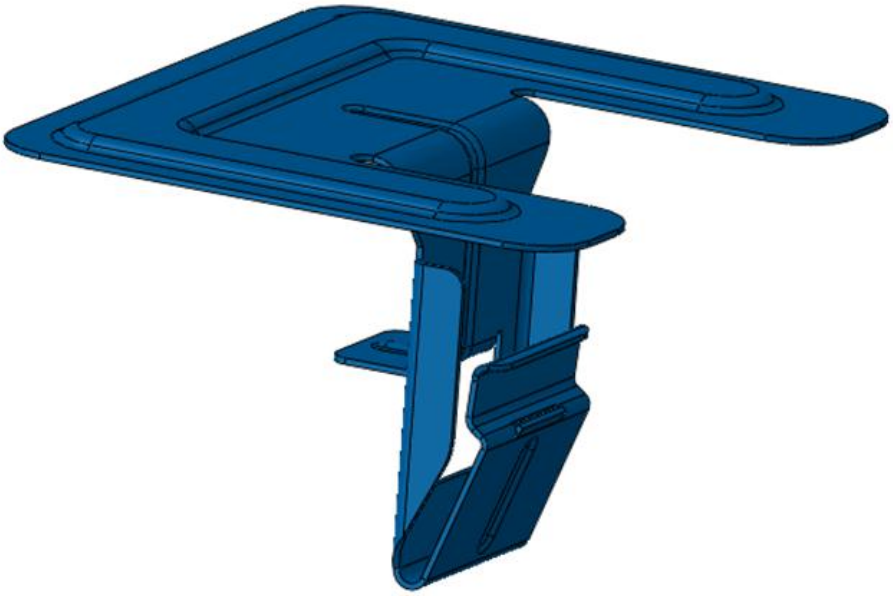

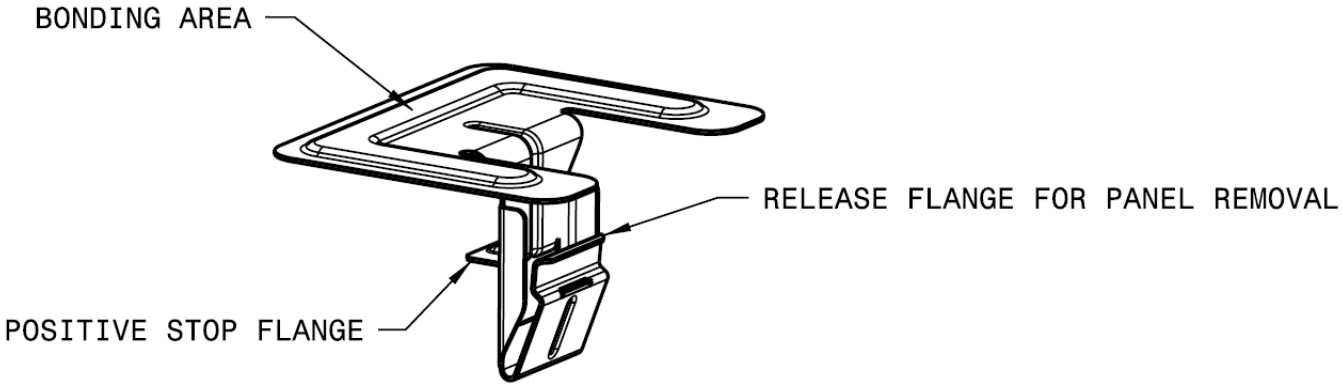

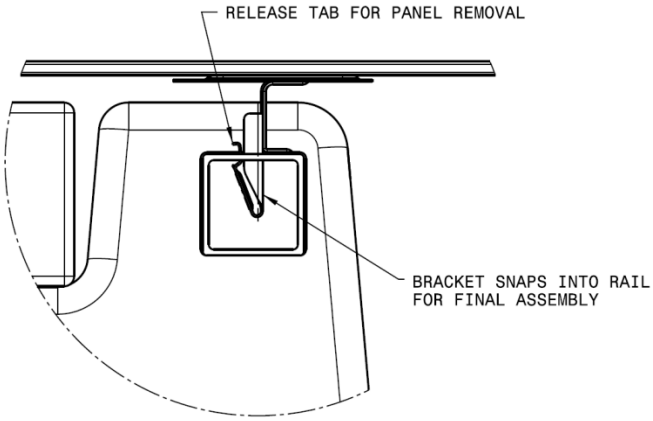

Support Base

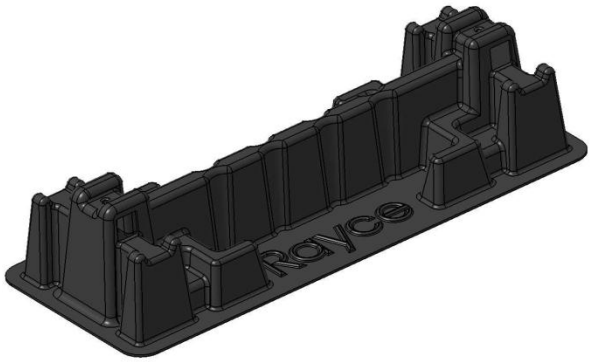

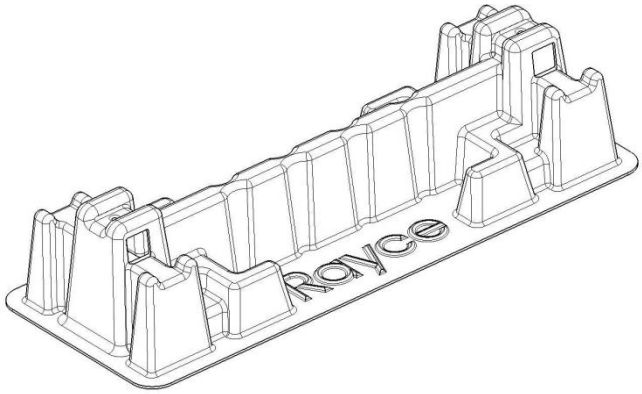

Pultrusion

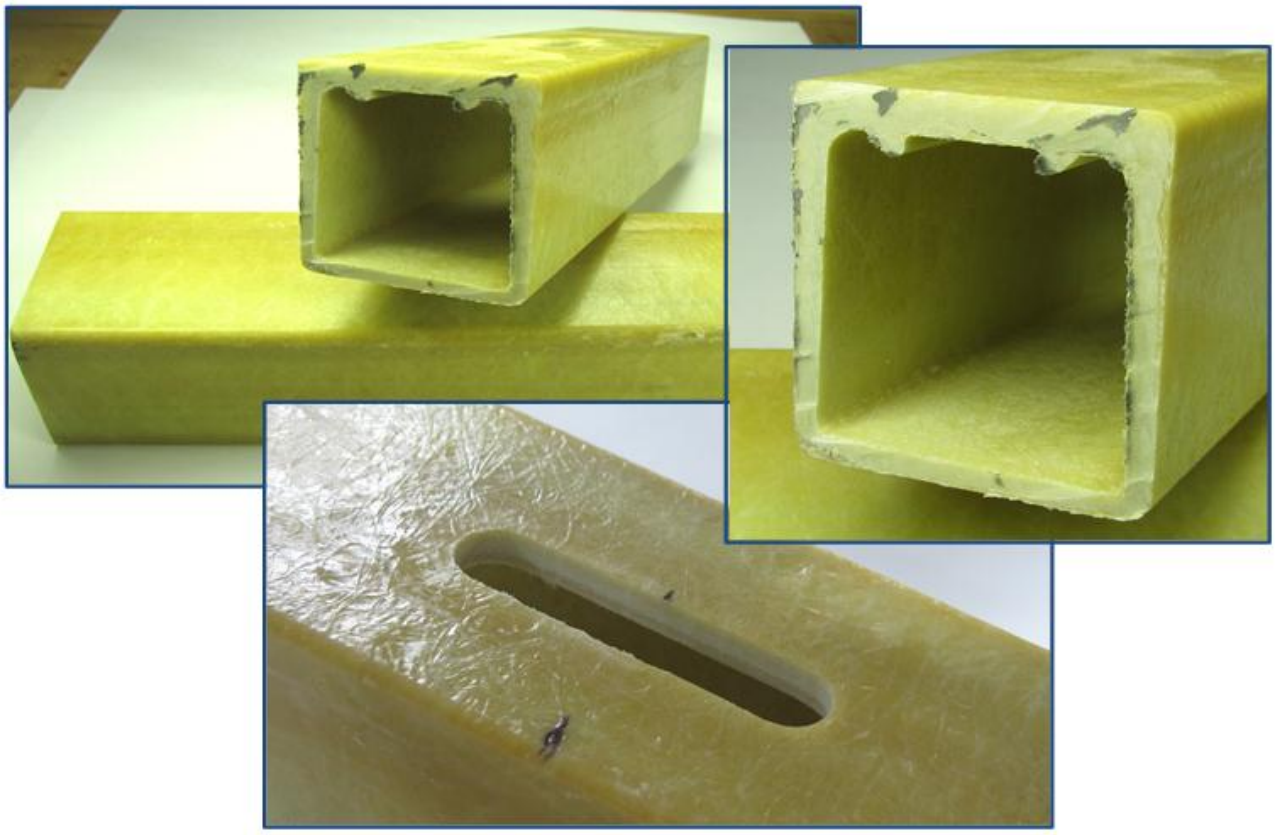

Base / Pultrusion / Ballast Assembly

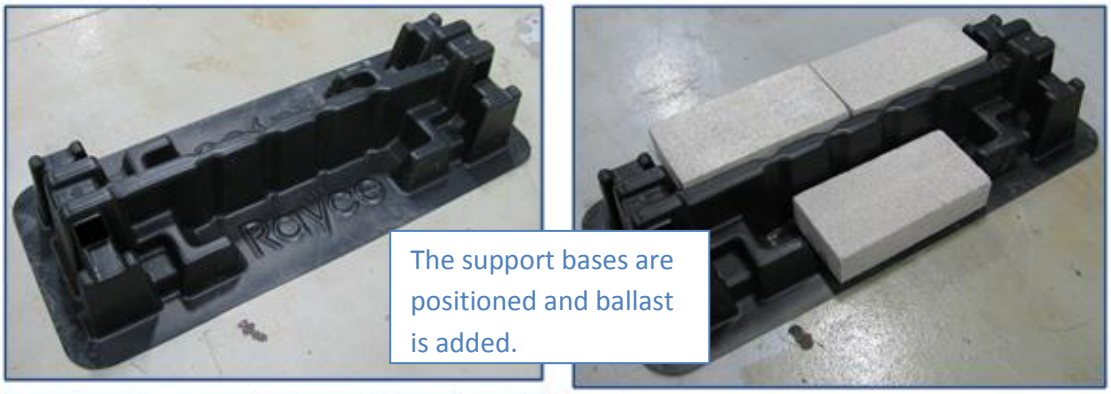

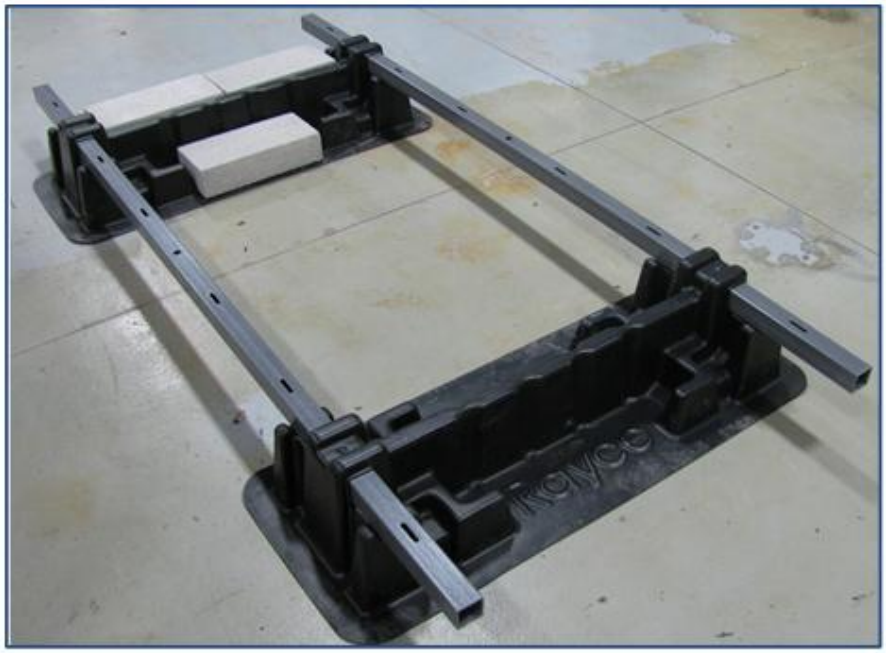

PV Module Installation

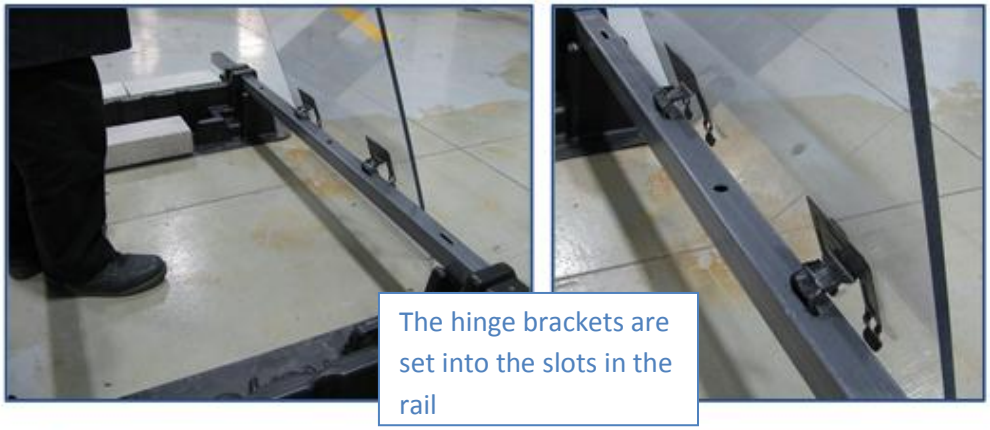

The hinge brackets are set into the slots in the rail

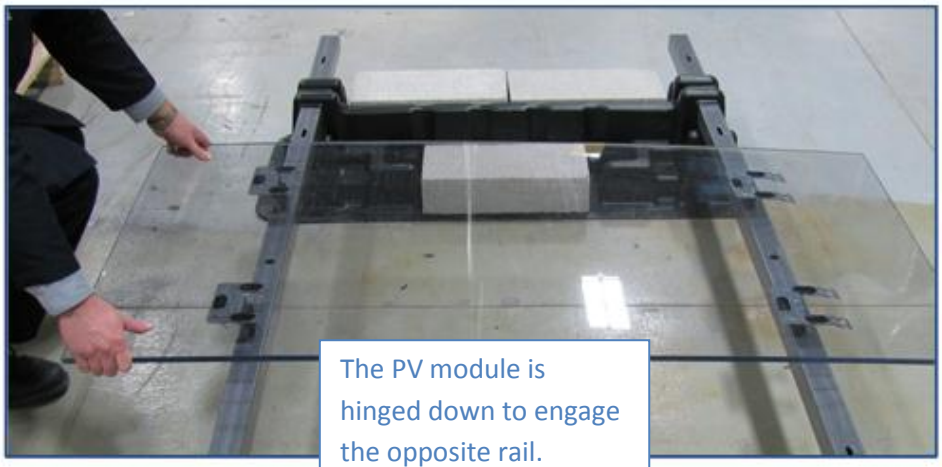

The PV module is hinged down to engage the opposite rail.

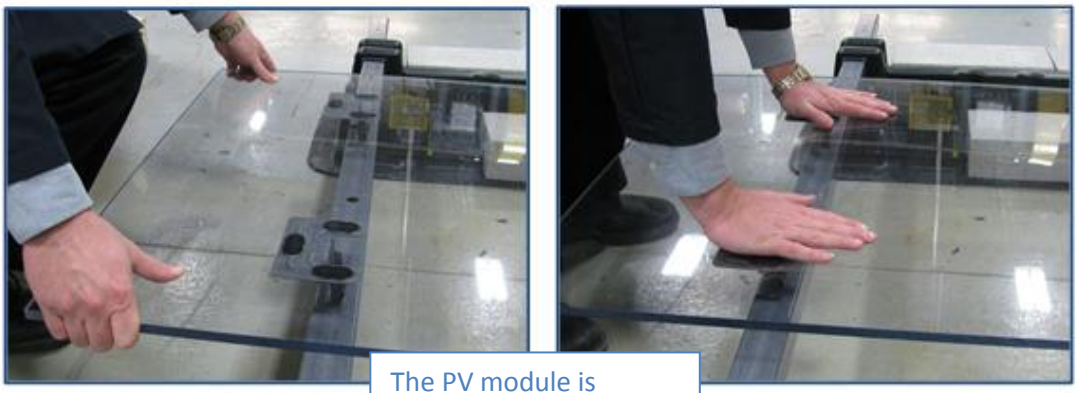

The PV module is snapped into the rail slots.

System Assembly

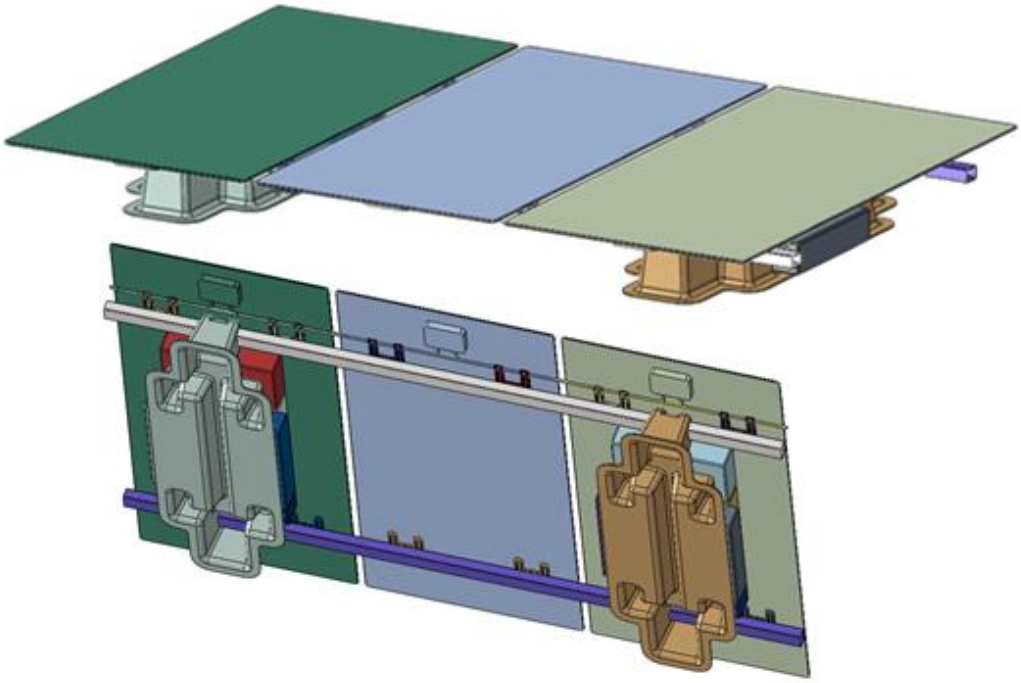

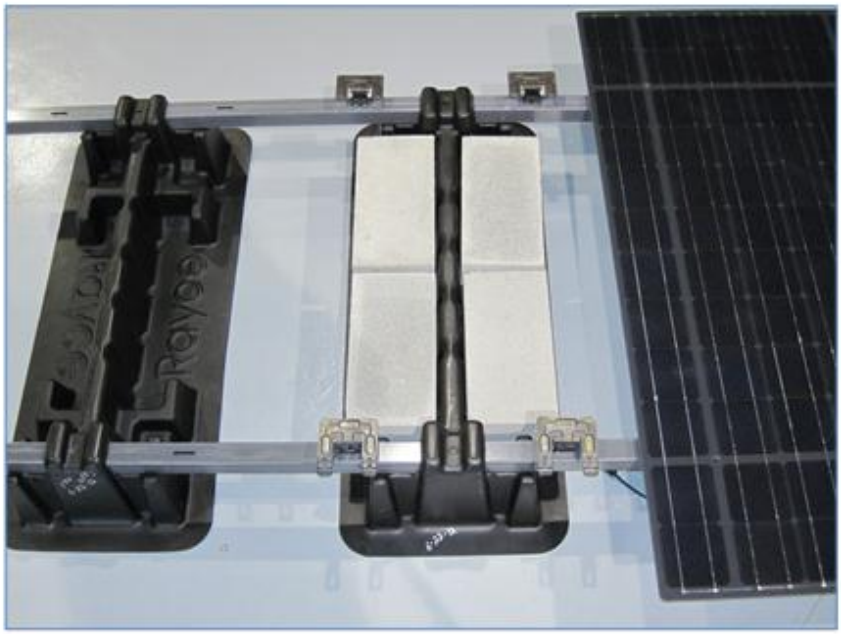

Simulation technical requirement

- Analyze the deflection and risks of break of the system, with 2 forms and 3 panels, under :
  - Wind uplift : P = 36Lbs/ft2 = 1725 Pa
  - Snow load : P = 45Lbs/ft2 = 2155 Pa
- **Conclusion :**
  - The simulation converged up to pressures of 43 and 87 Lbs/ft2 for uplift and snow load. The results are also presented for those maximum pressures.

	Wind uplift		Snow load	
	36 Lbs/ft²	**43 Lbs/ft²**	**45 Lbs/ft²**	**87 Lbs/ft²**
Max. deflection of the panel	19.5 mm	22.5mm	12.5mm	18.5mm
Max. deflection of the rail	~1.5mm	~2mm	3.5mm	6mm
Max. Uplift of the form	12mm	14.5mm	/	/
Vacuumed form	No permanent deformation	No permanent deformation	No permanent deformation	No permanent deformation
Hooks & clips	No permanent deformation	No permanent deformation	No permanent deformation	No permanent deformation
Rail	No risk of break	No risk of break	No risk of break	No risk of break

- Concerning the max. deflection of the rail under wind uplift : it's an approximation. The form lifts up, at the same time the rail bends. It makes it hard to determine precisely the deflection of the rail

- Concerning the vacuumed form, the stress-strain curve was not available. Therefore the stiffness of that material is over estimated. However the results can be considered relatively reliable as long as the stresses are under the yield strength, which is the case in that study.

Model

- **Material**

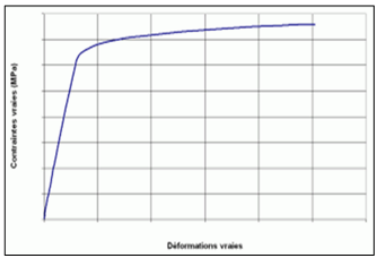

Hook/Clip : Quenched steel 1050-1065 45-50HRc

This steel is assumed to have the same mechanical characteristics of the C67S, for which we have internal and accurate data for simulation. The stress-strain curve is used in the simulation :

Young's modulus : **215000 MPa** Yield strength : **1240 MPa**

poisson coefficient : **0,3** Considère's criterion : **3,5 %**

Considère'criterion can be interpreted as the strain at break of the material.

Panel : Glass (Generic data)

Young's modulus : **69000 Mpa** Poisson coefficient : **0,3**

- **Model & solver information**

Vacuumed form : 44.600 nodes, 43.900 elements continuum shells

Rails : 112.000 nodes, 59600 elements continuum shells SC8R

Clips : 202.900 nodes, 156.900 elements linear hexahedrons with reduced integration C3D8R

Hooks : 143.800 nodes, 110.000 elements linear hexahedrons with reduced integration C3D8R

Glass panels : 2400 nodes, 1100 elements continuum shells SC8R

Model dof : 1.925.300

Solver : Abaqus standard 6.11-1

Model

- **Boundary conditions**

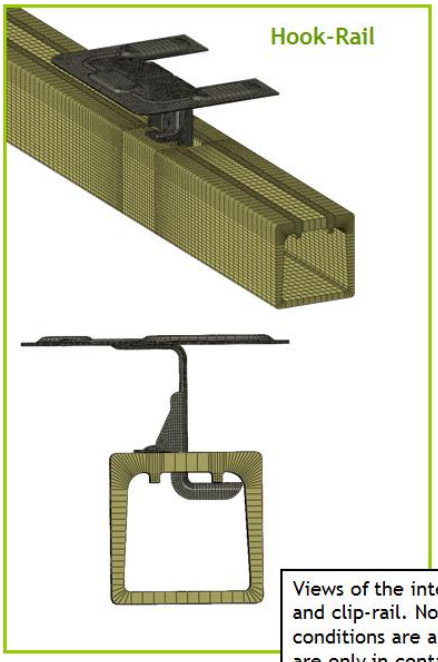

- In red, top surfaces of the ribs, tied to the glass, modeling the bonding, for all hooks and clips

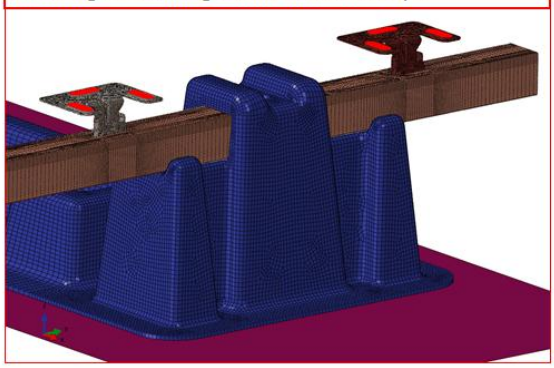

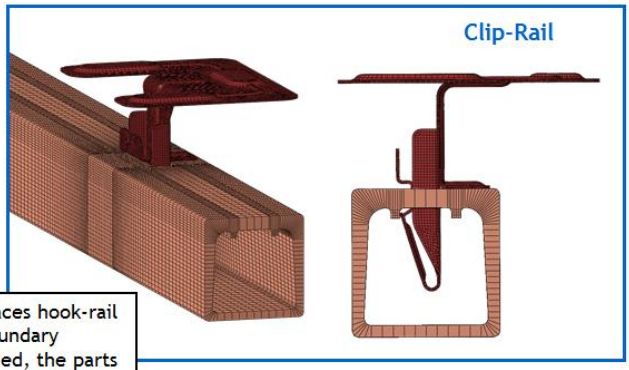

Views of the interfaces hook-rail and clip-rail. No boundary conditions are applied, the parts are only in contact with friction.

Model

- **Boundary conditions**
  - Contact with friction taken into account, coefficient: 0.1
  - Symmetry conditions : only ½ of the assembly is modeled.

Pressure applied on the glass panels (2.5x5=12.5ft²)

Snow load : Pressure on top surface

Uplift : Pressure on bottom surface

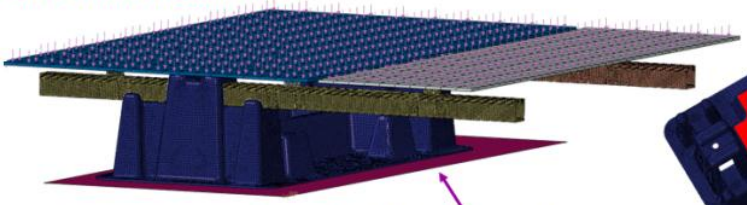

- View of the form only : clamped nodes are in red, corresponding to the area where the ballasts stand

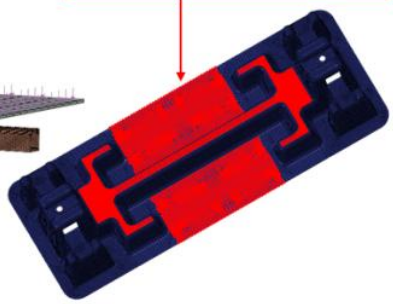

- Clamped rigid plate, modeling the ground in contact with the form

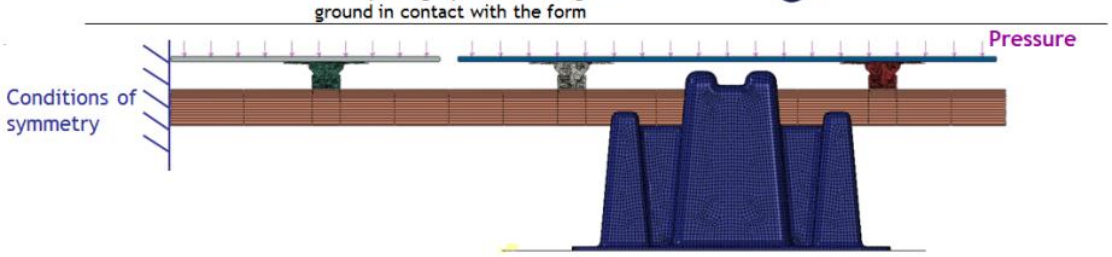

Results : Wind uplift - 36Lbs/ft^2

- Deformation of the system, on the hooks side :

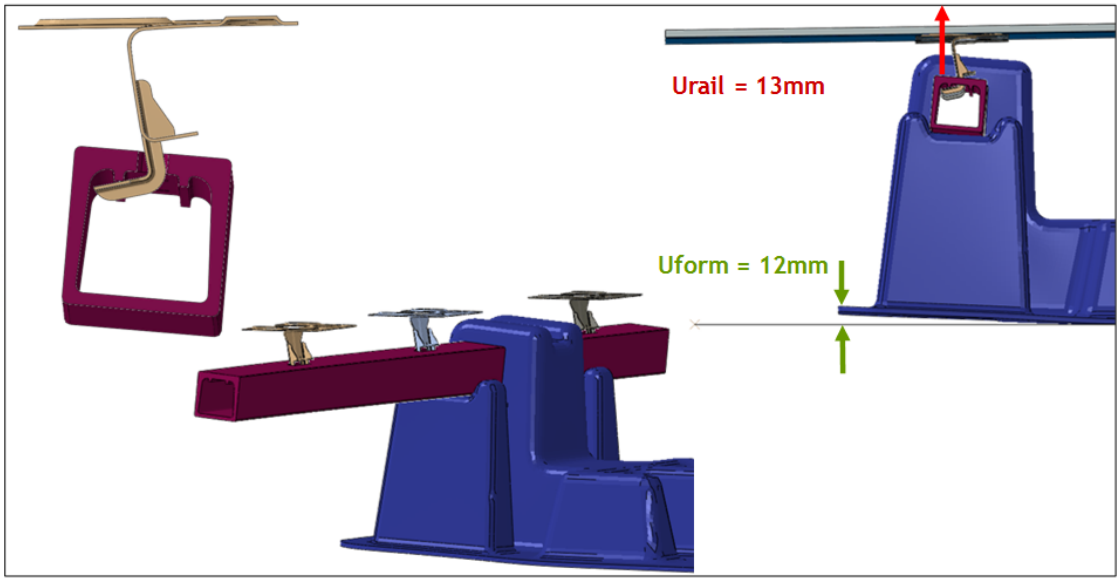

- Uplift of the form Uform = 12mm. Maximum vertical translation of the rail Urail = 13mm. Therefore the maximum deflection of the rail is roughly 1mm.
- The deformation of each hook is the same. On the top left cut-view, we can see that **the hooks are still well engaged in the rail.**

Results : Wind uplift - 36Lbs/ft^2

- Deformation of the system, on the clips side :

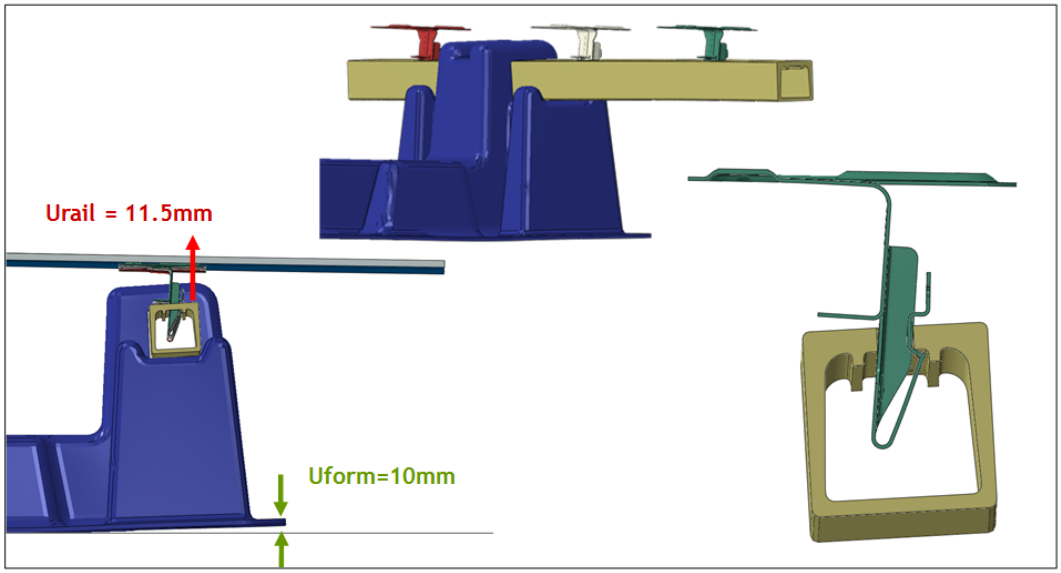

- Uplift of the form Uform = 10mm. Maximum vertical translation of the rail Urail = 11.5mm. Therefore the maximum deflection of the rail is roughly 1.5mm.
- On the bottom right cut-view, we can see that the clips are still well engaged in the rail.

Results : Wind uplift - 36Lbs/ft^2

- Repartition of Von Mises stresses on the form :

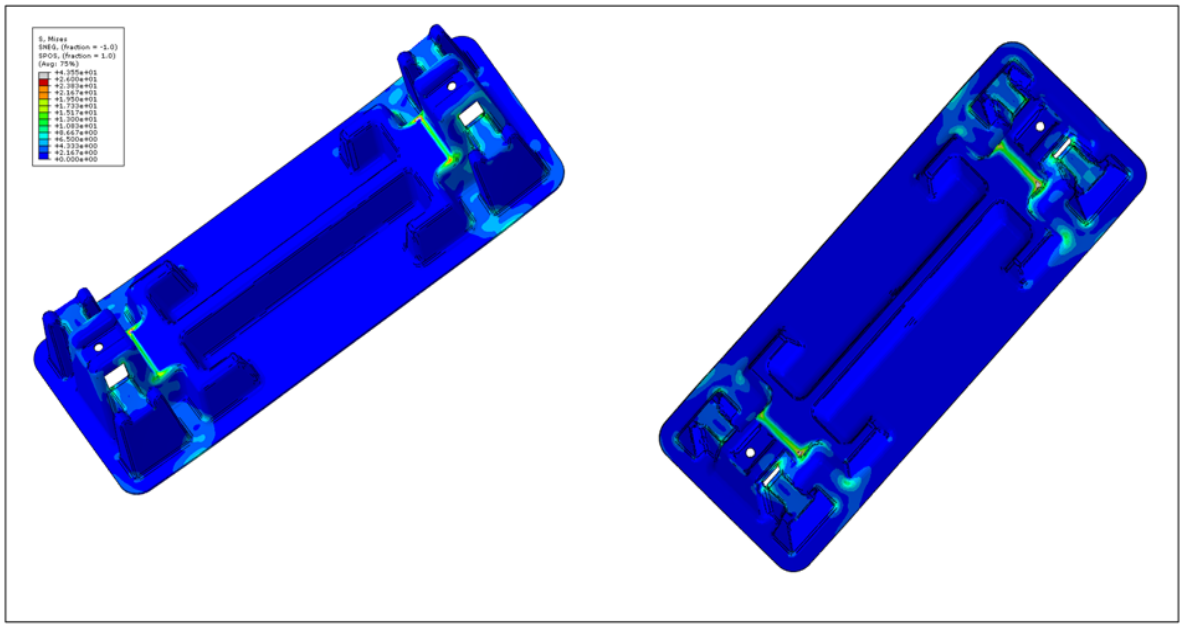

Results : Wind uplift - 36Lbs/ft^2

- Repartition of Von Mises stresses on the hook :

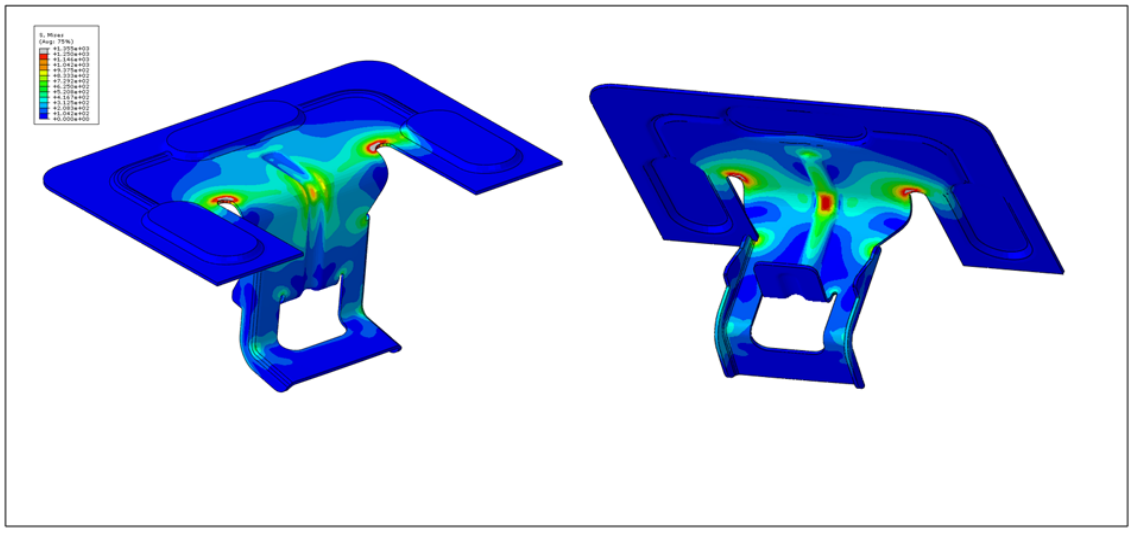

- Scale : 0-1250MPa. Grey areas are those where the yield strength is over exceeded.
- The repartition of the stresses is similar on every hook. Therefore the stresses are analyzed on one hook only.
- The stresses over exceed the yield strength on a local area. The simulation indicates **no risk of significant residual deformation of the hooks.**

Results : Wind uplift - 36Lbs/ft^2

- Repartition of Von Mises stresses on the clip :

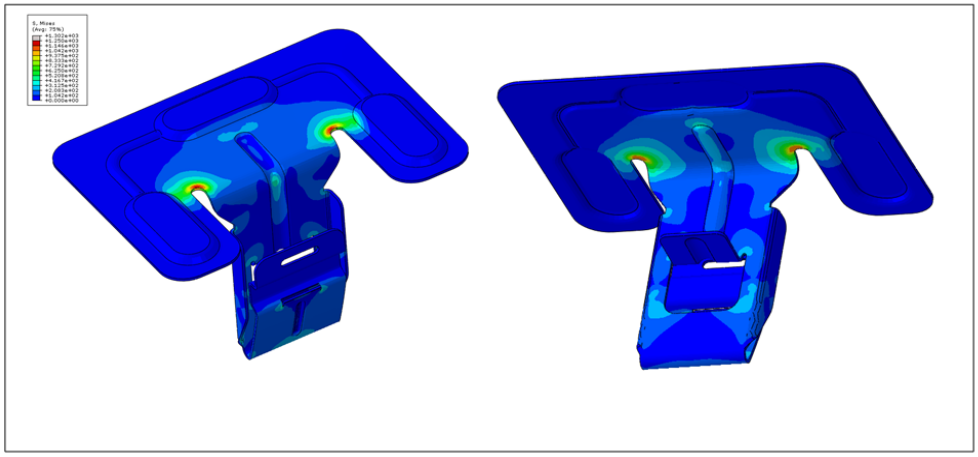

- Scale : 0-1250MPa. Grey areas are those where the yield strength is over exceeded.
- The repartition of the stresses is similar on every hook. Therefore the stresses are analyzed on one clip only.
- The stresses over exceed the yield strength on a local area. The simulation indicates **no risk of significant residual deformation of the clips.**

Results : Wind uplift - 36Lbs/ft^2

- Repartition of stresses on the rail. This is the rail on the clip side, which is more stressed :

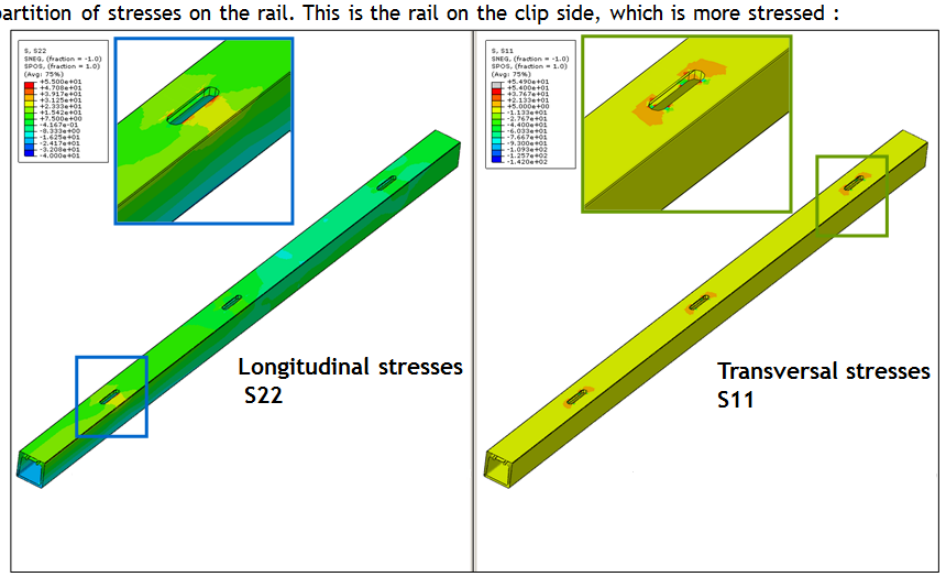

- Longitudinal stresses : Scale : -40MPa/55Mpa. The maximum allowable tensile strength is 705 MPa. Stresses are below this strength. The simulation indicates **no risk of break in the longitudinal direction.**
- Transversal stresses : Scale : -142MPa /54 Mpa, respectively compression and tensile strength of the material. Stresses are below those limits. The simulation indicates **no risk of break in the transversal direction.**

Results : Snow load - 45Lbs/ft^2

- General deformation of the complete system, repartition of vertical displacement U_3 :

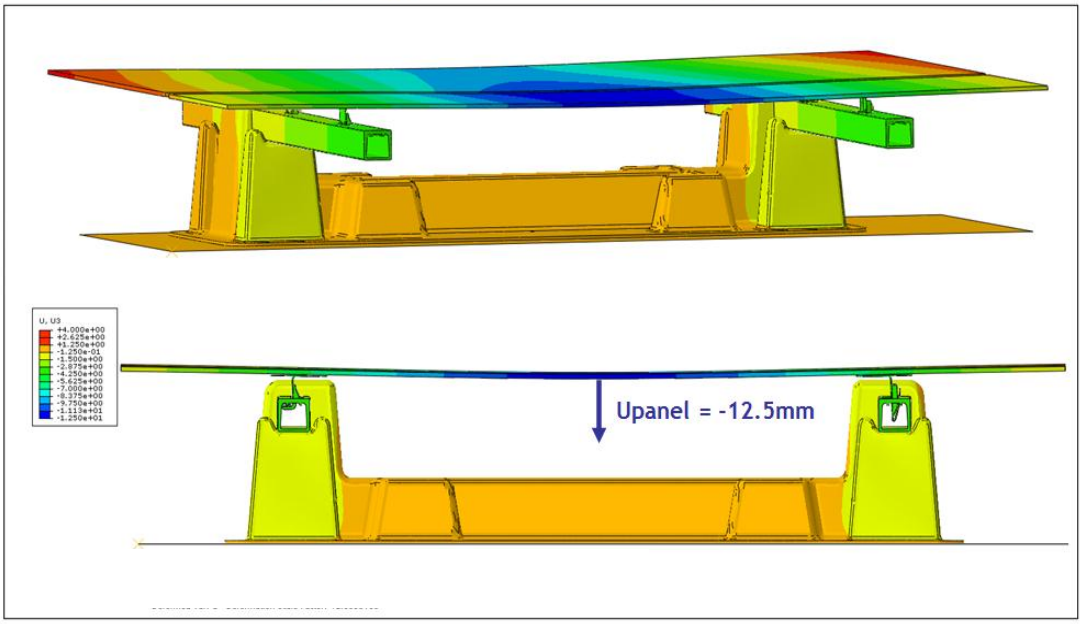

- Maximum deflection of the panel : Upanel = 12.5mm.

Results : Snow load - 45Lbs/ft^2

- Deformation of the system, on the hooks side :

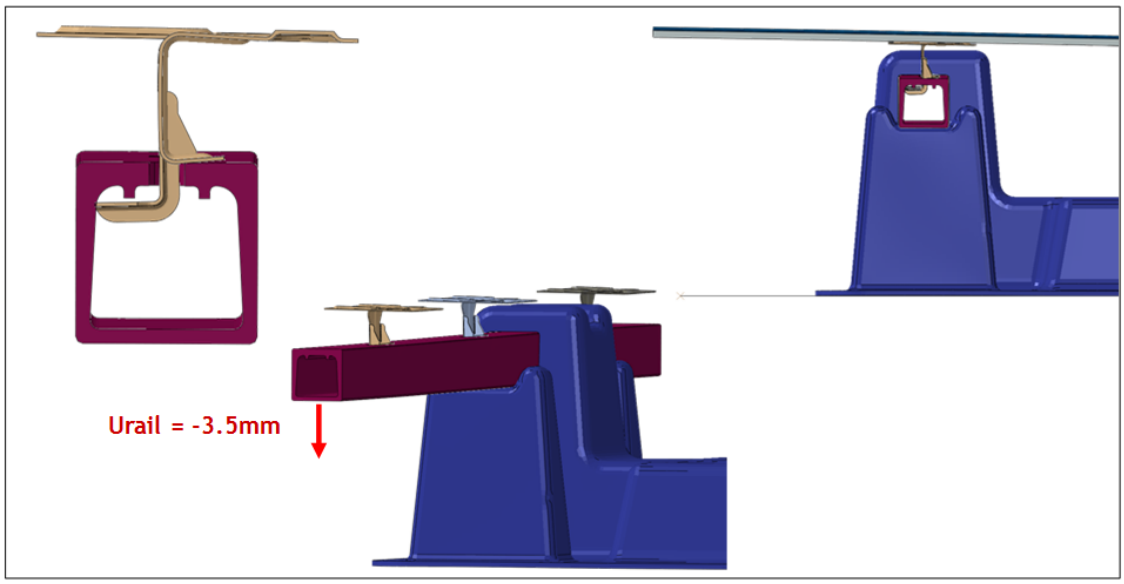

- Maximum deflection of the rail Urail = 3.5mm.
- The deformation of each hook is the same.

Results : Snow load - 45Lbs/ft^2

- Deformation of the system, on the clips side :

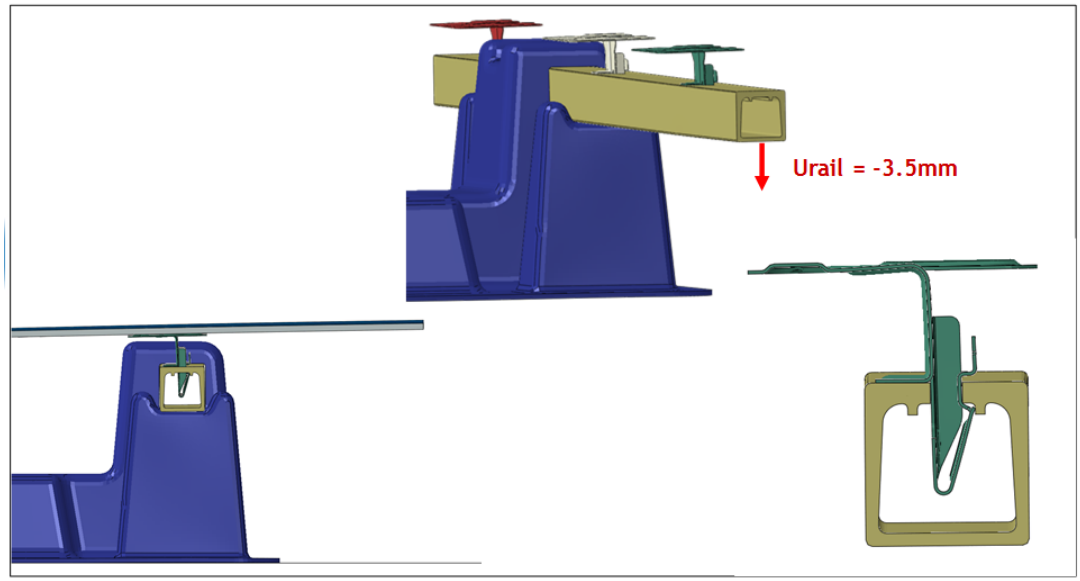

- Maximum deflection of the rail Urail = 3.5mm.

Results : Snow load - 45Lbs/ft^2

- Repartition of Von Mises stresses on the form :

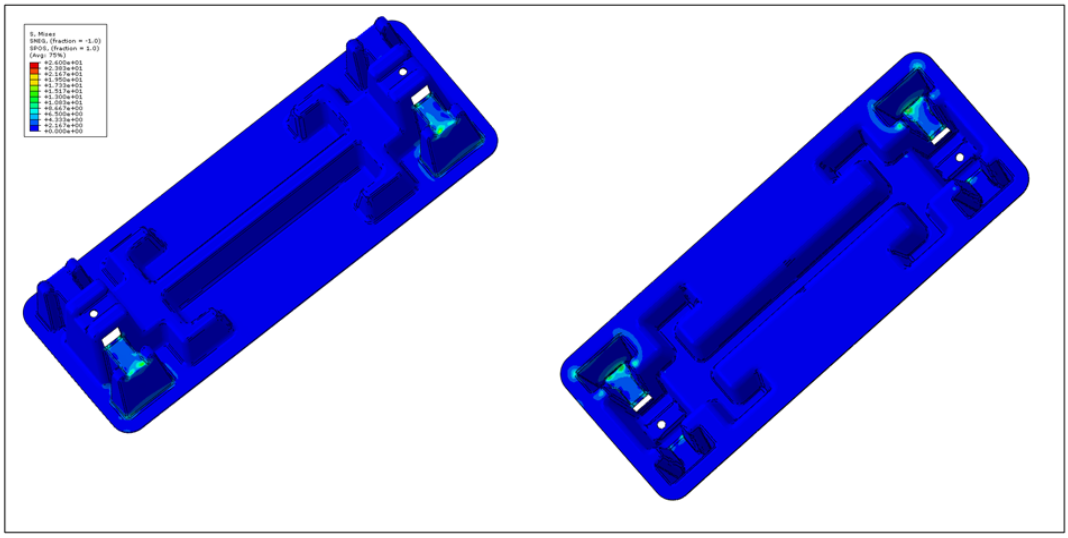

- Scale : 0-26MPa. Grey areas are those where the yield strength is over exceeded.
- The stresses don't over exceed the yield strength. The simulation indicates **no risk of significant residual deformation of the form.**

Results : Snow load - 45Lbs/ft^2

- Repartition of Von Mises stresses on the hook :

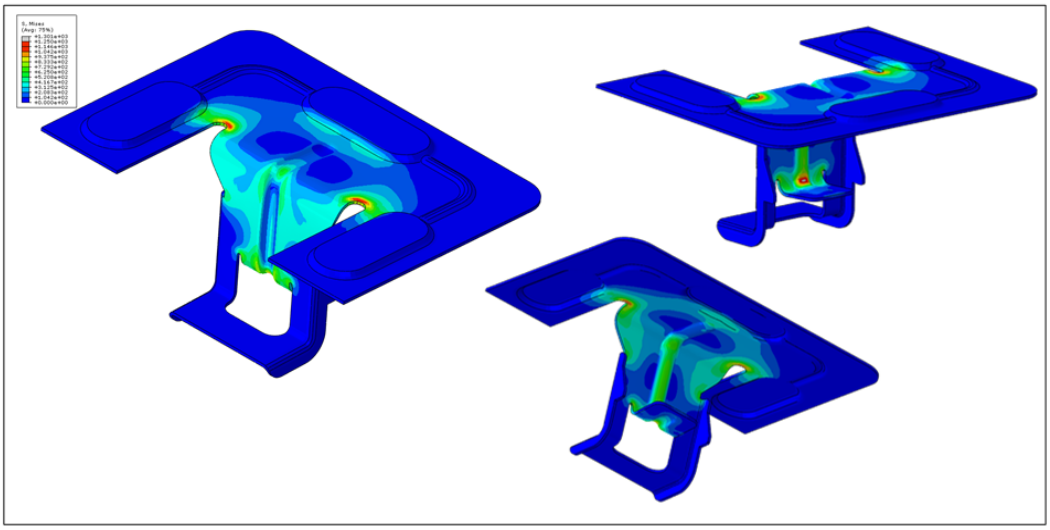

- Scale : 0-1250MPa. Grey areas are those where the yield strength is over exceeded.
- The repartition of the stresses is similar on every hook. Therefore the stresses are analyzed on one hook only.
- The stresses over exceed the yield strength on a local area. The simulation indicates **no risk of significant residual deformation of the hooks.**

Results : Snow load - 45Lbs/ft^2

- Repartition of Von Mises stresses on the clip :

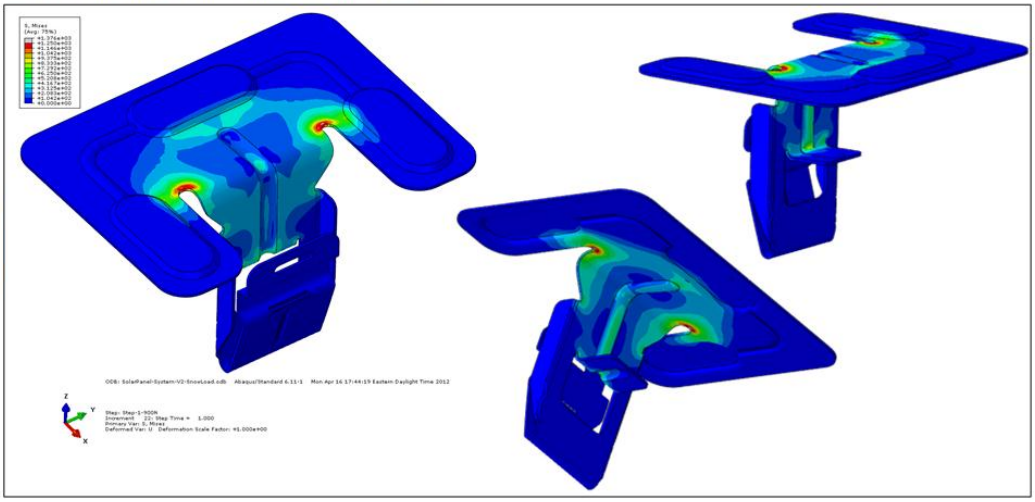

- Scale : 0-1250MPa. Grey areas are those where the yield strength is over exceeded.
- The repartition of the stresses is similar on every hook. Therefore the stresses are analyzed on one clip only.
- The stresses over exceed the yield strength on a local area. The simulation indicates **no risk of significant residual deformation of the clips.**

Results : Snow load - 45Lbs/ft^2

- Repartition of **longitudinal stresses** on the rail. This is the rail on the clip side, which is more stressed :

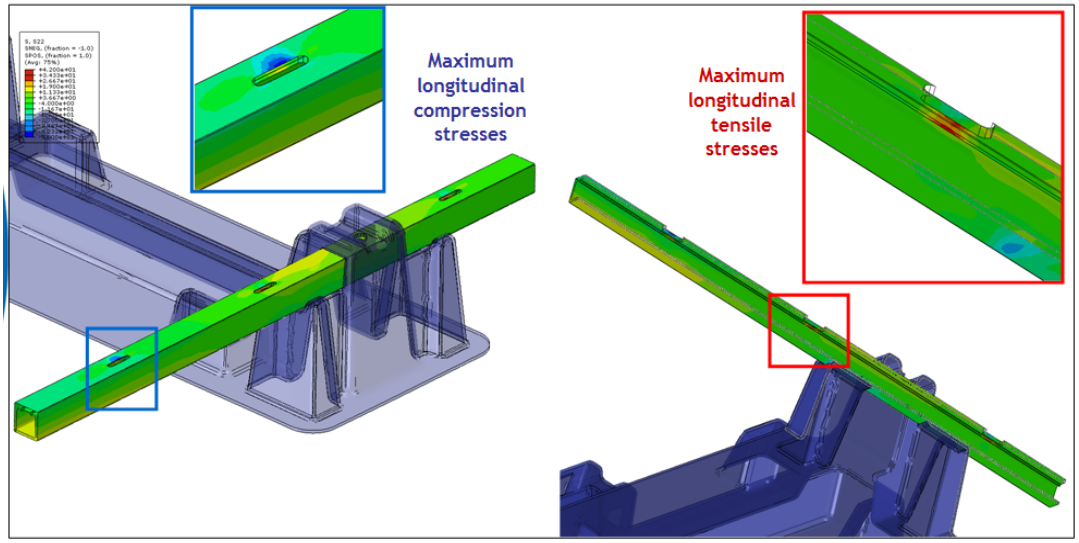

- Scale : -50MPa/45Mpa. The maximum allowable tensile strength is 705 MPa. Stresses are below this strength. The simulation indicates **no risk of break in the longitudinal direction.**

Results : Snow load - 45Lbs/ft^2

- Repartition of transversal stresses on the rail. This is the rail on the clip side, which is more stressed :

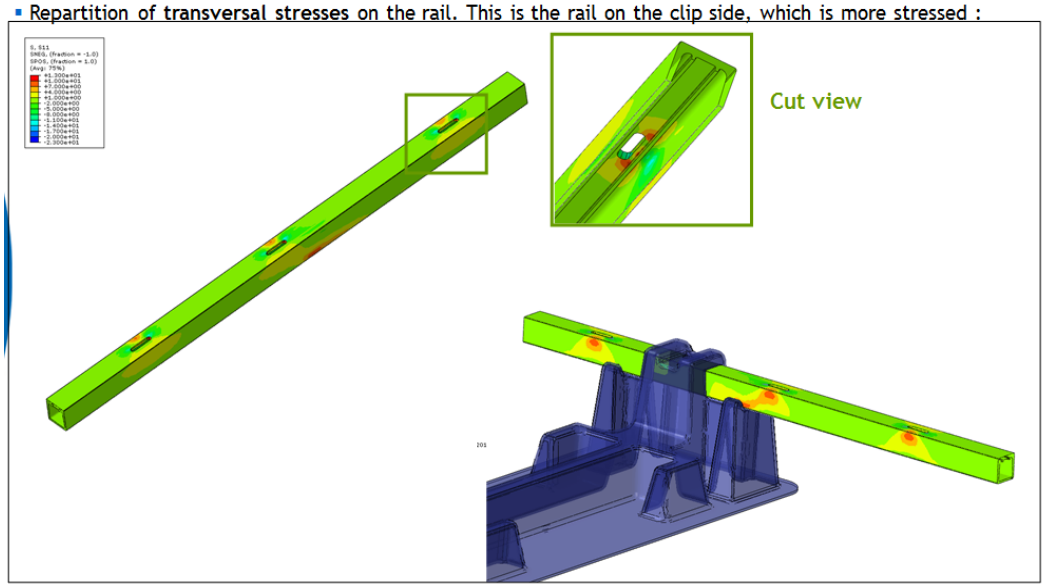

- Scale : -23MPa /13 Mpa. The maximum allowable strength are -142MPa and 54MPa. Stresses are below those compression and tensile strengths. The simulation indicates **no risk of break in the transversal direction.**

Conclusion

- The simulation converged up to pressures of 43 and 87 Lbs/ft2 for uplift and snow load. The results are also presented for those maximum pressures.

	Wind uplift		Snow load	
	36 Lbs/ft^2	**43 Lbs/ft^2**	**45 Lbs/ft^2**	**87 Lbs/ft^2**
Max. deflection of the panel	19.5 mm	22.5mm	12.5mm	18.5mm
Max. deflection of the rail	~1.5mm	~2mm	3.5mm	6mm
Max. Uplift of the form	12mm	14.5mm	/	/
Vacuumed form	No permanent deformation	No permanent deformation	No permanent deformation	No permanent deformation
Hooks & clips	No permanent deformation	No permanent deformation	No permanent deformation	No permanent deformation
Rail	No risk of break	No risk of break	No risk of break	No risk of break

- Concerning the max. deflection of the rail under wind uplift : it's an approximation. The form lifts up, at the same time the rail bends. It makes it hard to determine precisely the deflection of the rail.

- Concerning the vacuumed form, the stress-strain curve was not available. Therefore the stiffness of that material is over estimated. However the results can be considered relatively reliable as long as the stresses are under the yield strength, which is the case in that study.

System Design #2
Bonded Bracket w/o Pultrusion System
(Angled Mount)

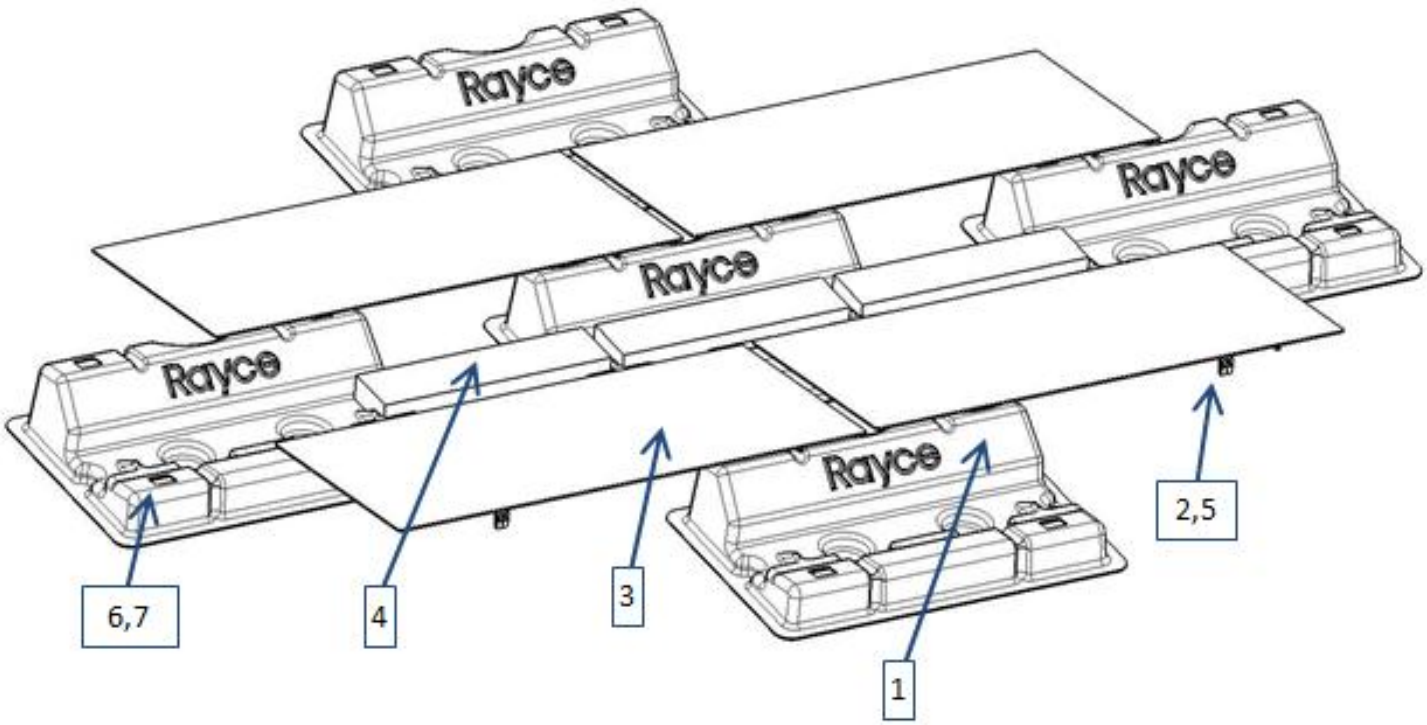

Item	Description	Part Number	Overall Size	Material	Finish	Color	Quantity
1	Support Base	N/A	29.5 X 9 X 45 mm	HDPE	N/A	Black	1
2	Braket Attachment	Ray-001-2011_6-1A	71 X 120 X 165.5 mm	1.0mm Thick 1050-1065 Steel	Geomet	Silver	4
3	Solar Panel	Ray-001-2011_7-1A	76.2 X 152.4 cm	Glass/Glass	N/A	Glass	1
4	Ballast	N/A	3 X 7 X 29 mm	Cement	N/A	Gray	2
5	Techbond	N/A	As Needed	Polyurethane	N/A	Black	As Required
6	Engagement Bracket	N/A	50 X 120 X 34mm	1.0mm Thick 1050-1065 Steel	Geomet	Silver	4
7	Locking Plate	N/A	90 X 120 X 2mm	1.0mm Thick 1050-1065 Steel	Geomet	Silver	4

System #2 utilizes the same module attachment brackets as System #1. The modules are snapped directly into vacuum formed bases. This design does not use pultruded rails but does require the addition of engagement brackets not used in system #1.

Angled Support Base

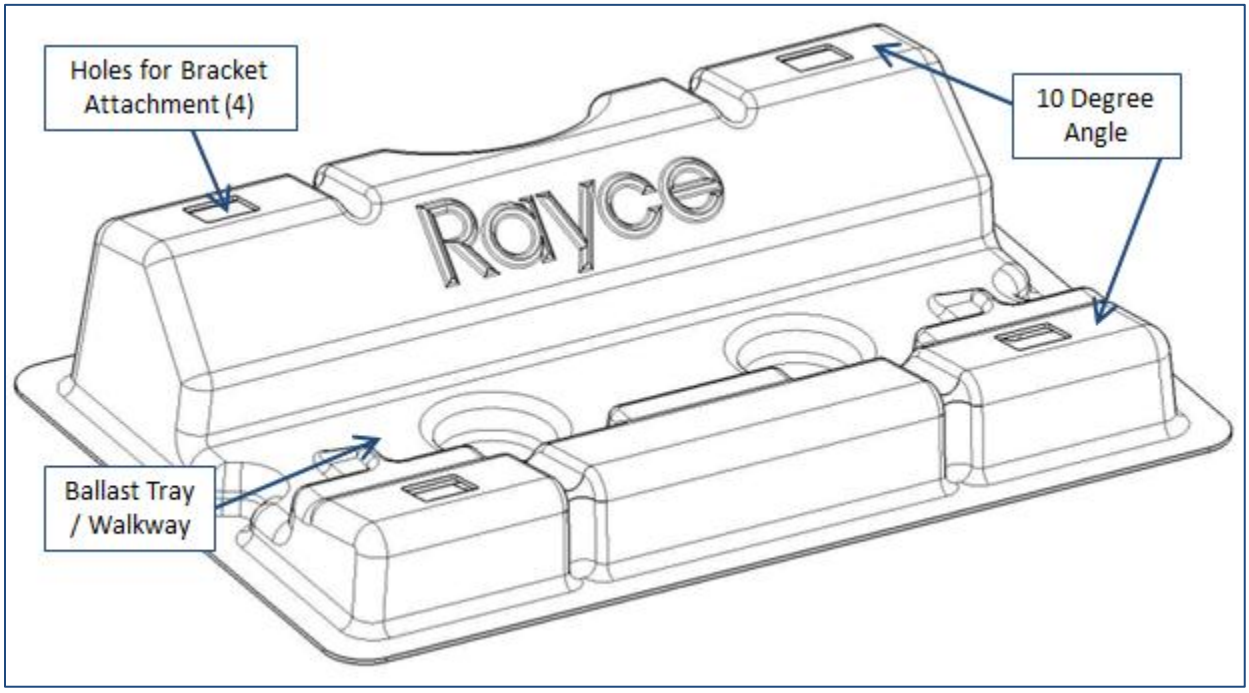

Brackets

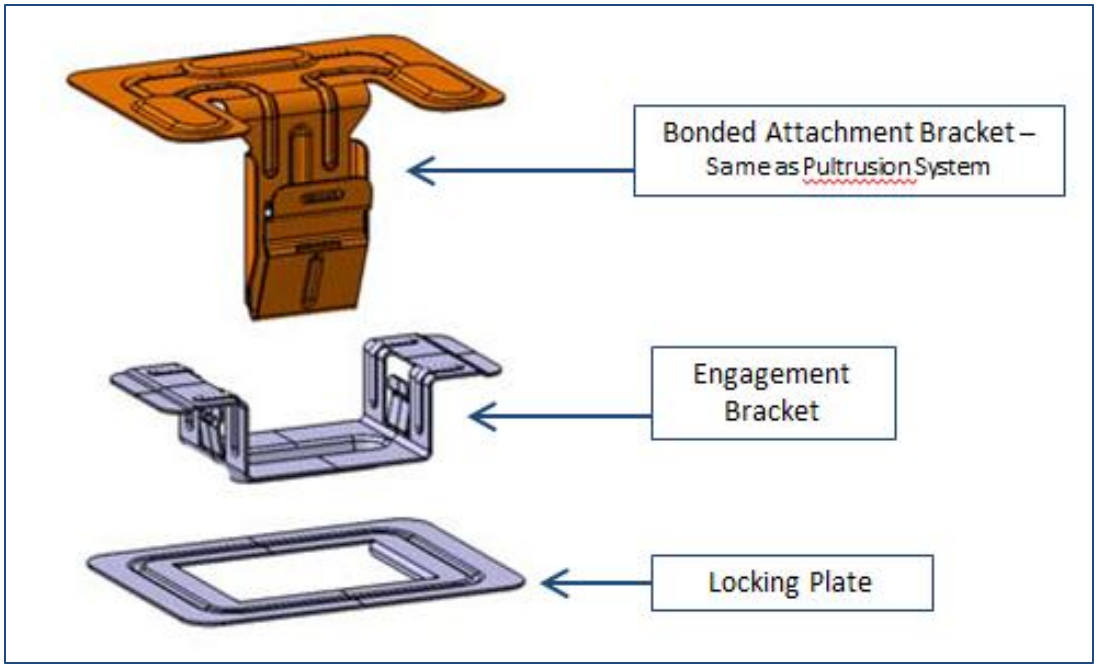

Bracket Assembly

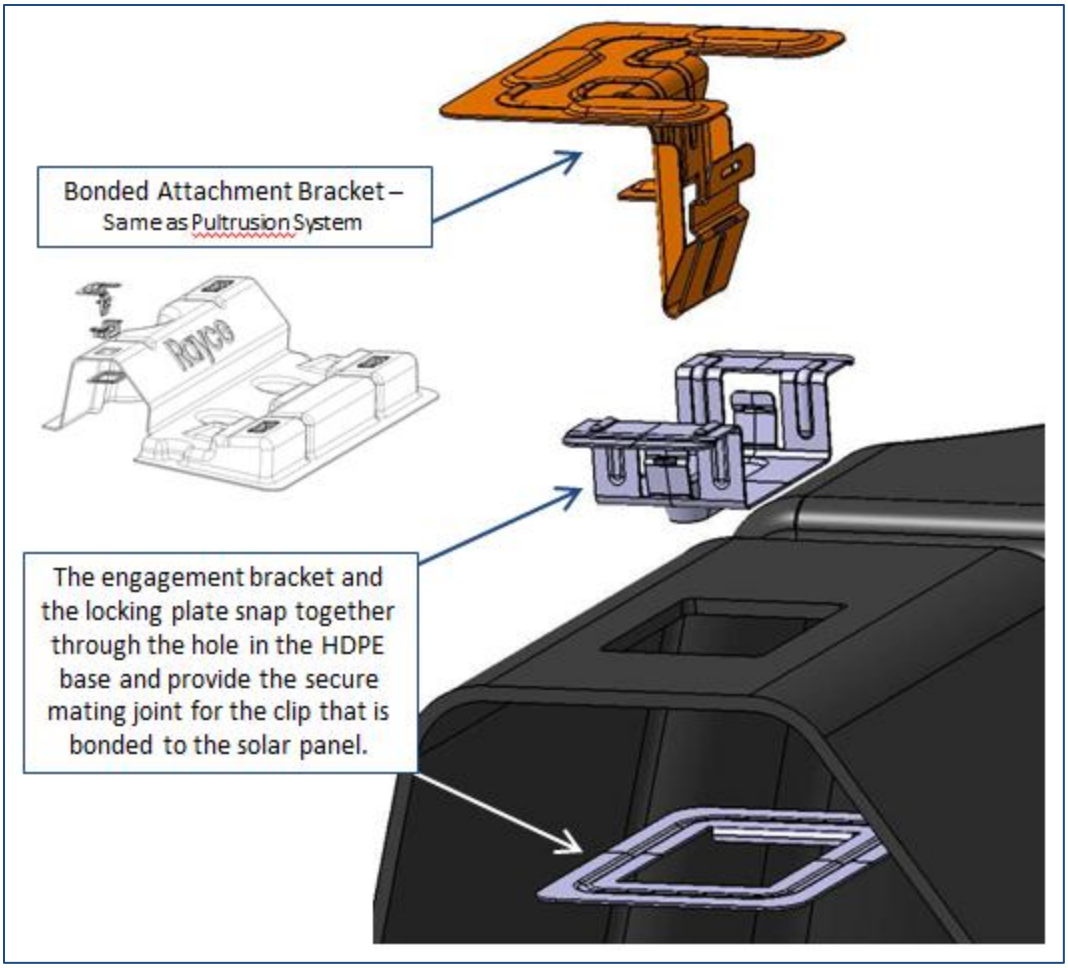

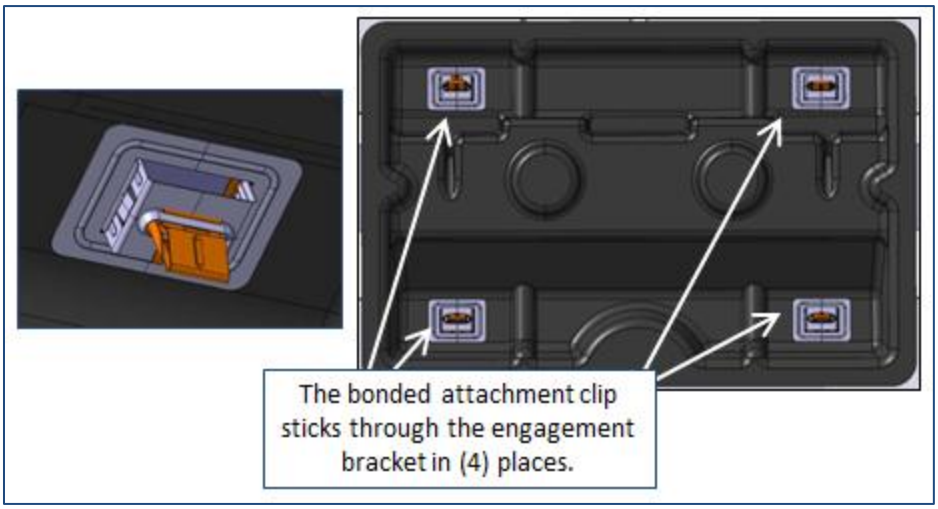

System Assembly

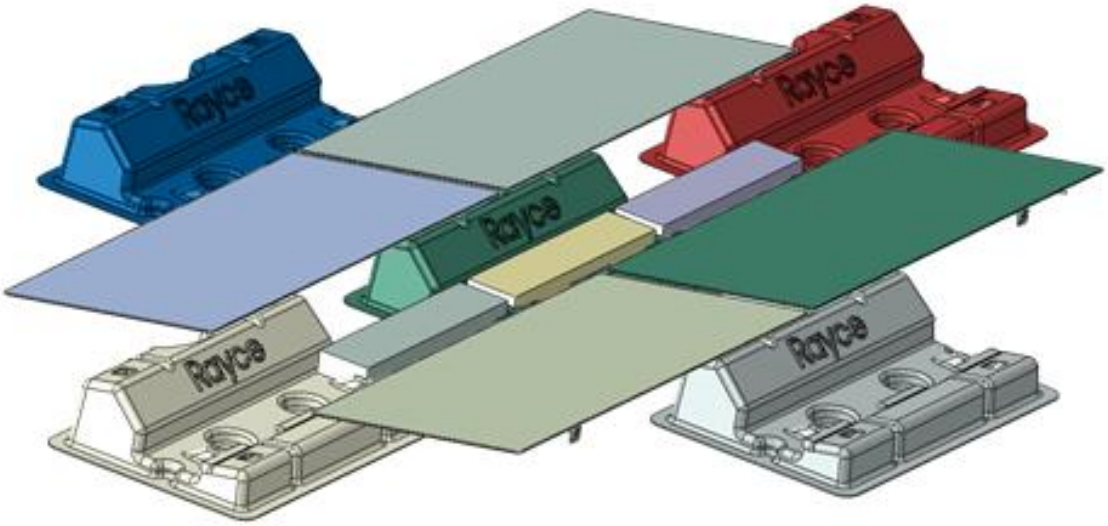

Model

- **Material**

Vacuumed form : PEHD Paxon BA50-100 (Source : ExxonMobil)

Young's modulus : **1240 MPa** Yield strength : **26 MPa**

poisson coefficient : **0,4** Strain at break : **1000%**

The stress-strain curve was not available. The stiffness of that material will be over estimated. However the results can be considered relatively reliable as long as the stresses remain under the yield strength.

Clips : Quenched steel 1050-1065 45-50HRc

This steel is assumed to have the same mechanical characteristics of the C67S, for which we have internal and accurate data for simulation. The stress-strain curve is used in the simulation :

Young's modulus : **215000 MPa** Yield strength : **1250 MPa**

poisson coefficient : **0,3** Considère's criterion : **3,5 %**

Considère'criterion can be interpreted as the strain at break of the material.

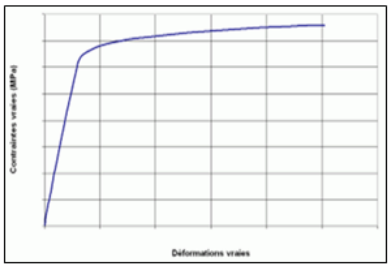

- **Model & solver information**

Vacuumed form : 31.400 nodes, 15.500 elements continuum shells

Clips : 88.000 nodes, 67.000 elements linear hexahedrons with reduced integration C3D8R

Model dof : 404.000

Solver : Abaqus standard 6.11-1

- **Boundary conditions**
  - Contact with friction taken into account, coefficient: 0.1
  - Symmetry conditions : only ½ of the assembly is modeled.

- The load is applied on one clip only. The force is applied on 1 node, see next slide. The force is applied perpendicular to the top surface of the form, all the other directions are fixed.
2 load cases are analyzed : uplift and snow load. The glass panels are 12.5ft^2, 4 clips / panel. The force per clip is calculated from those values :
  - Wind uplift : P = 36Lbs/ft^2 → F = 36*12.5/4 = 115Lbs/Clip = 500N/Clip
  - Snow load : P = 45Lbs/ft^2 → F = 45*12.5/4 = 140Lbs/Clip = 625N/Clip

- clamped nodes are in red, corresponding to the area where the ballasts stand

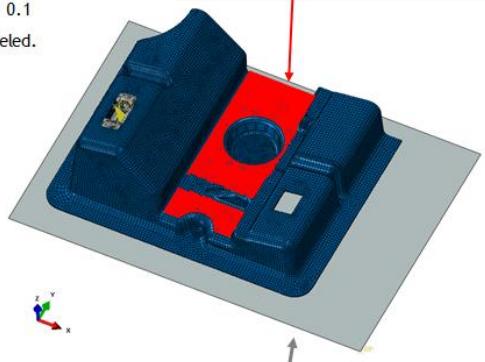

- Clamped rigid plate, modeling the ground in contact with the form

Model

- **Boundary conditions**

Views of the interfaces clips / form. The different parts are in contact with friction. The load is applied on one node, linked by rigid elements to the area where the red clip is in contact. Those areas are shown in the pictures below for each load case. This way, the red clip is not modeled, but the load application area where the clip transmits the force is correct. More, the load application point is located at the center of the upper surface of the red clip.

- Local view of the junction area

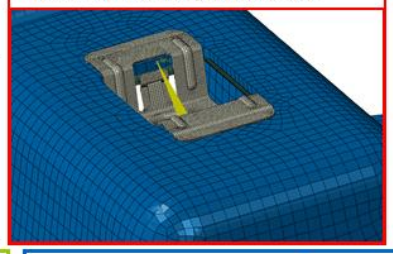

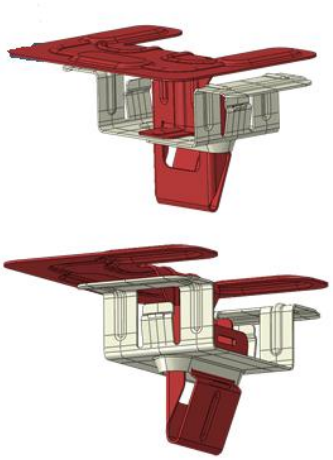

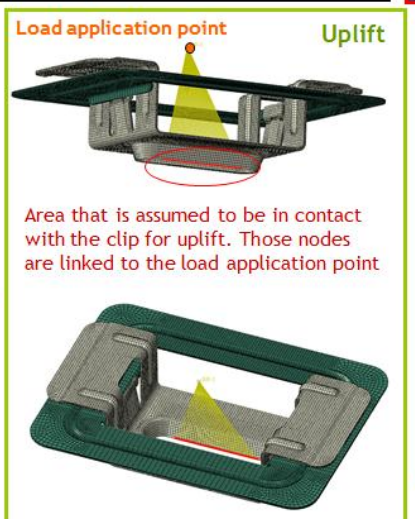

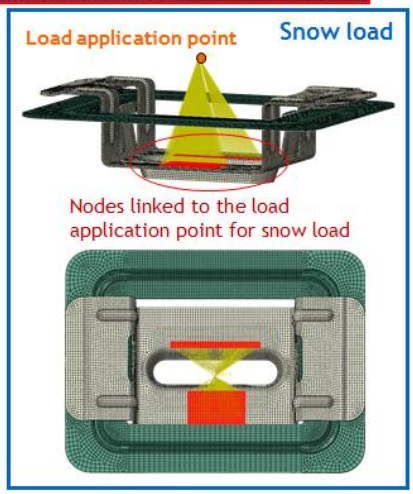

Results : Wind uplift - P=36Lbs/ft² - F=115Lbs/Clip

- General deformation of the complete system, repartition of displacement U :

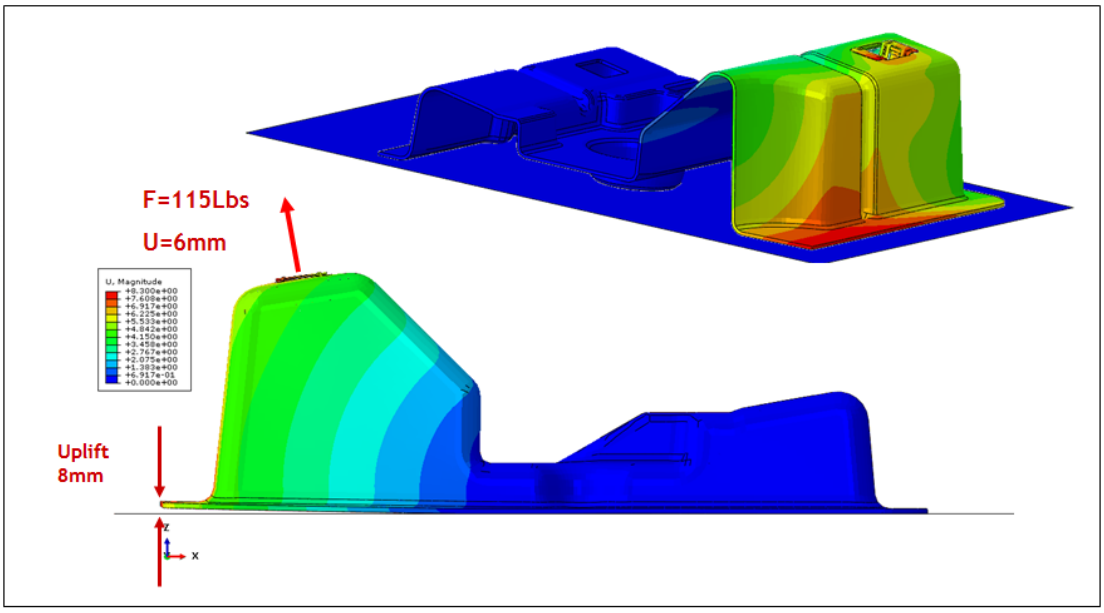

- Displacement of the clip : U = 6mm. The uplift of the form is about 8mm.

Results : Wind uplift - P=36Lbs/ft^2 - F=115Lbs/Clip

- General deformation focused on the junction area :

The teeth of the clip come into contact underneath the edge of the steel plate

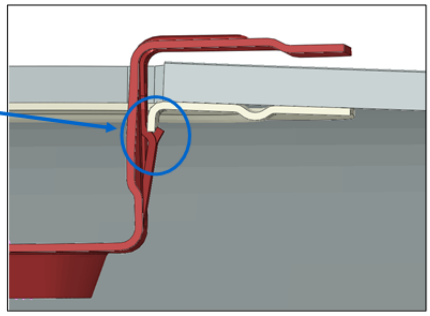

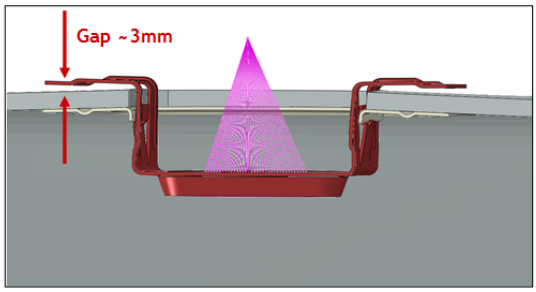

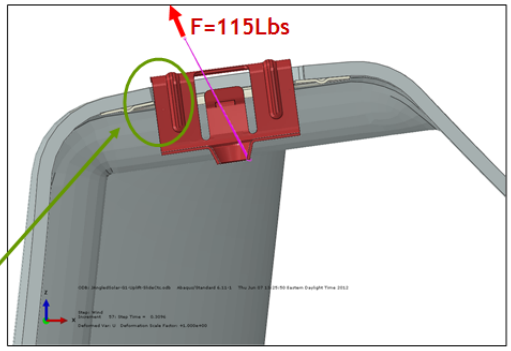

As the form uplifts and rotates under the wind load, the steel part slides and comes into account inside the hole of the form

Results : Wind uplift - P=36Lbs/ft^2 - F=115Lbs/Clip

- Repartition of Von Mises stresses on the form :

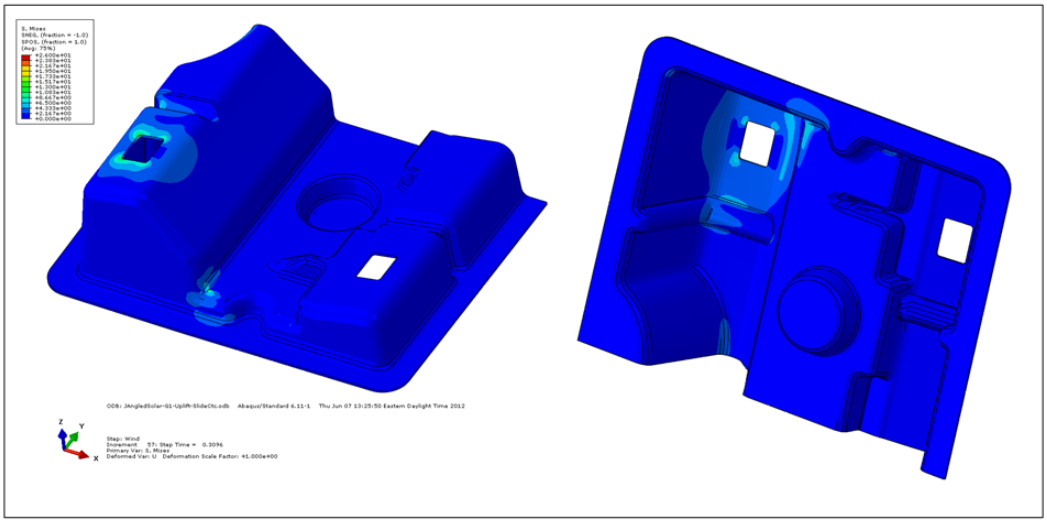

- Scale : 0-26MPa, yield strength of the material.
- The stresses remain below the yield strength of the material. The simulation indicates **no risk of residual deformation of the form.**

Results : Wind uplift - P=36Lbs/ft^2 - F=115Lbs/Clip

- Repartition of Von Mises stresses on the steel parts :

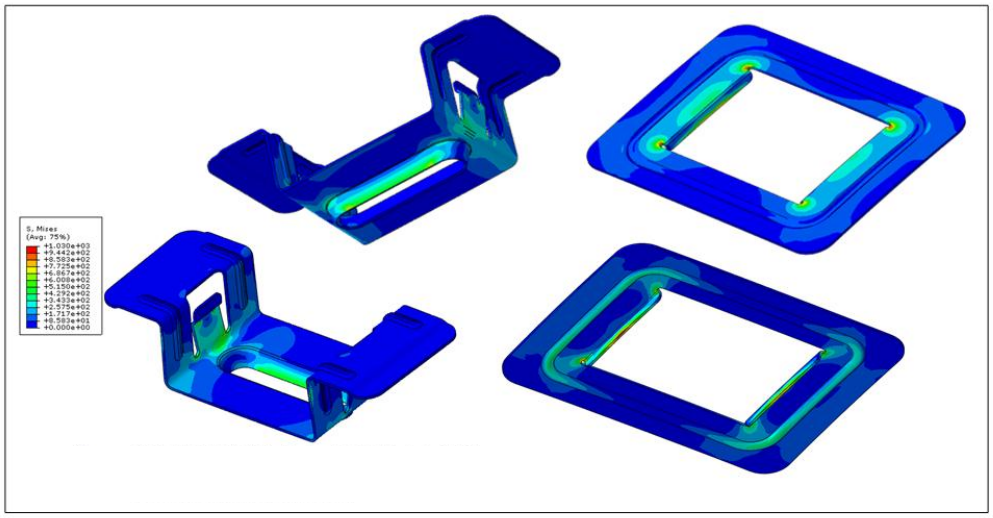

- Scale : 0-1250MPa, yield strength of the material.
- The stresses remain below the yield strength of the material. The simulation indicates **no risk of residual deformation of those steel parts.**

Results : Snow load - P=45Lbs/ft^2 - F=140Lbs/Clip

- General deformation of the complete system, repartition of displacement U :

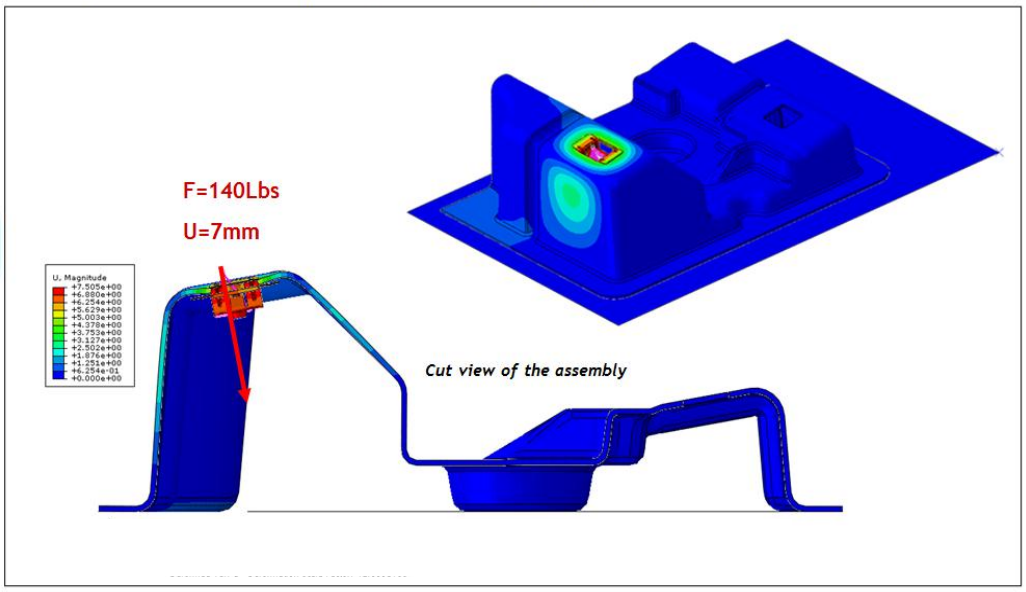

- Displacement of the clip : U = 7mm.

Results : Snow load - P=45Lbs/ft^2 - F=140Lbs/Clip

- General deformation focused on the junction area :

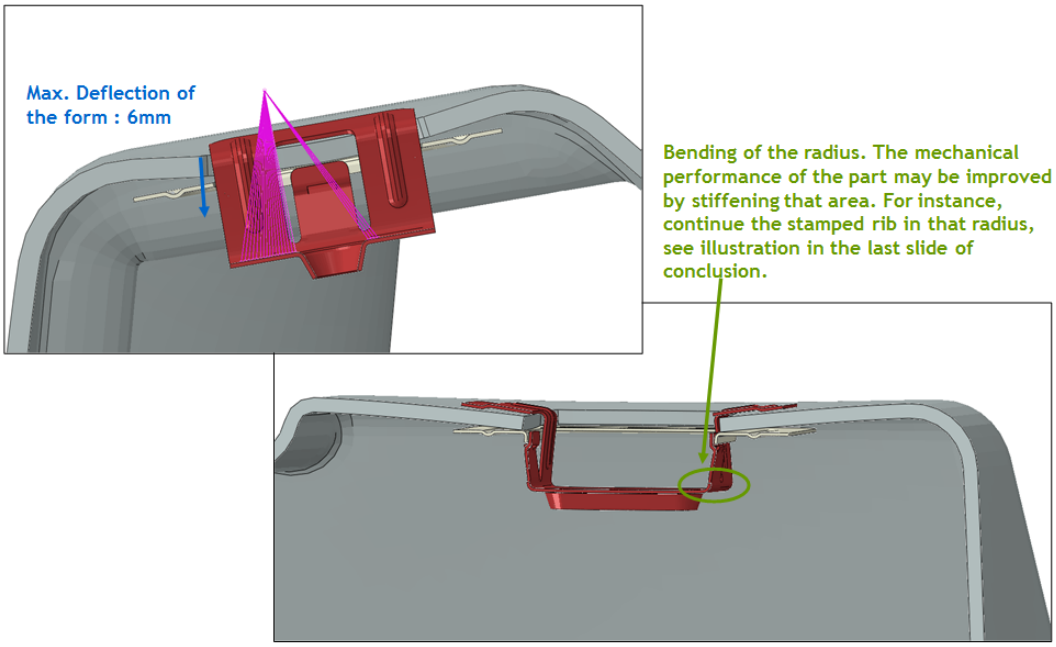

Results : Snow load - P=45Lbs/ft^2 - F=140Lbs/Clip

- Repartition of Von Mises stresses on the form :

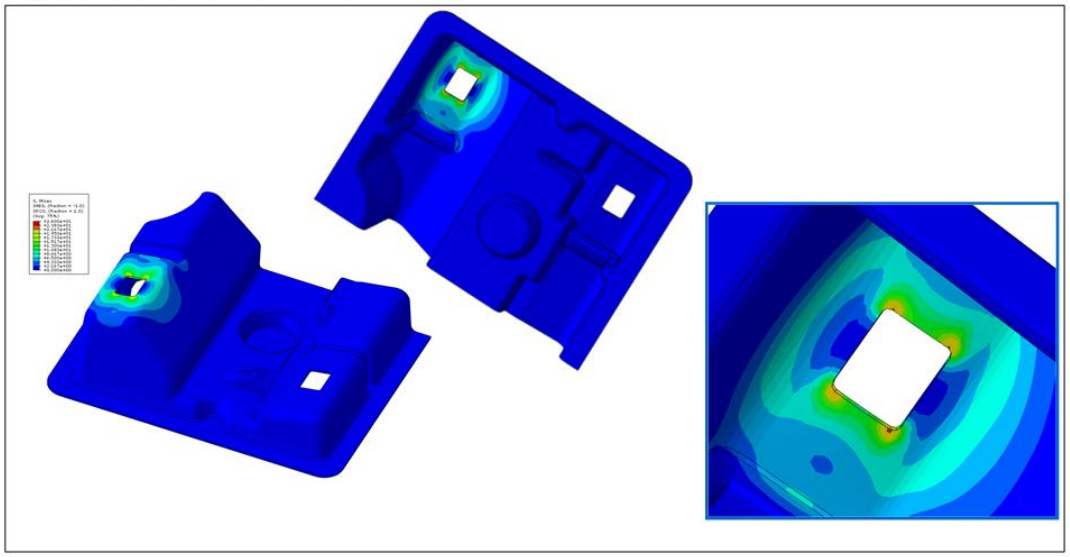

- Scale : 0-26MPa, yield strength of the material.
- The stresses remain below the yield strength of the material. The simulation indicates no risk of residual deformation of the form.

Conclusion

- For wind uplift, under a pressure P = 36Lbs/ft^2, equivalent to a force per clip F = 115Lbs, the simulation indicates :
  - a displacement of the clip U = 6mm,
  - An uplift of the form of about 8mm,
  - A gap between the steel part and the form of 3mm,
  - No risk of permanent deformation of the form and of the steel parts,
  - As the form uplifts and rotates under the wind load, the steel part slides and comes into account inside the hole of the form; also the teeth of the clip come into contact underneath the edge of the steel plate
- For snow load, under a pressure P = 45Lbs/ft^2, equivalent to a force per clip F = 140Lbs, the simulation indicates :
  - a displacement of the clip U = 7mm,
  - A maximum deflection of the form of 6mm,
  - No risk of permanent deformation of the form and of the steel parts,

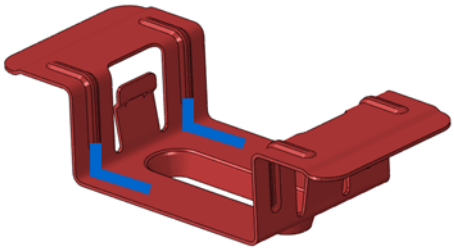

System Design #3
Bonded Bracket Standing Seam Roof

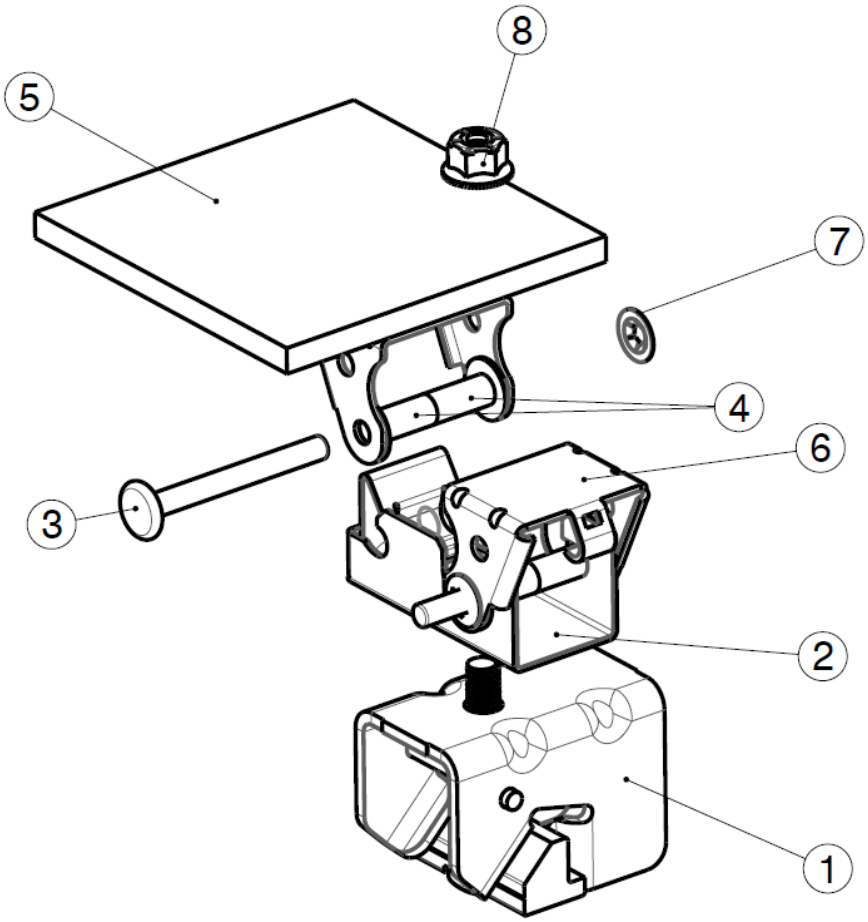

ITEM	QTY	DESCRIPTION
1	1	POWAR GRIP RT0003
2	1	PV BRACKET
3	2	PIN
4	4	PIN INSULATOR
5	2	PV MODULE
6	2	HINGE BRACKET
7	2	PS060913
8	1	NUT

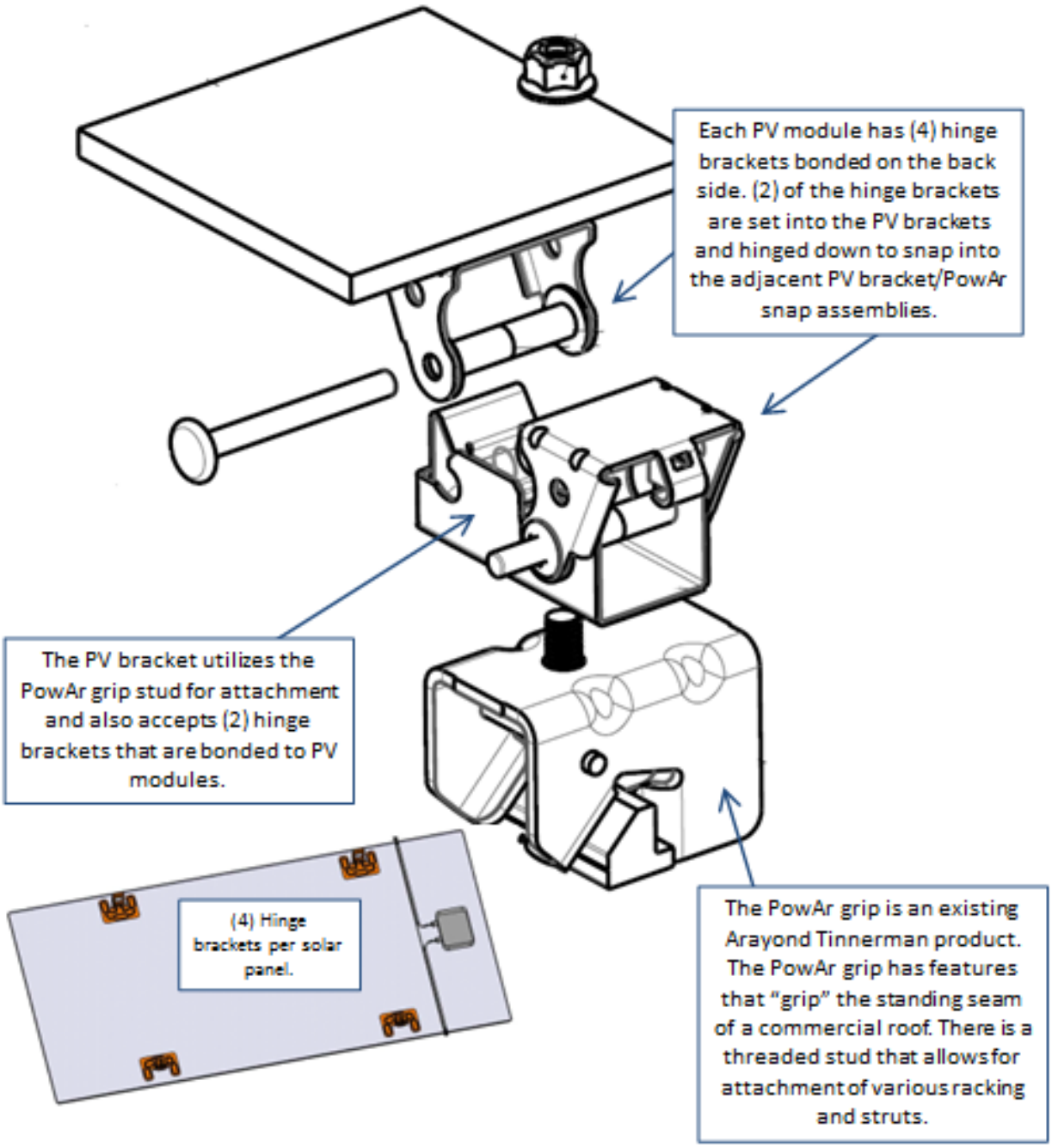
Each PV module has (4) hinge brackets bonded on the back side. (2) of the hinge brackets are set into the PV brackets and hinged down to snap into the adjacent PV bracket/PowAr snap assemblies.
The PV bracket utilizes the PowAr grip stud for attachment and also accepts (2) hinge brackets that are bonded to PV modules.
(4) Hinge brackets per solar panel.
The PowAr grip is an existing Arayond Tinnerman product. The PowAr grip has features that "grip" the standing seam of a commercial roof. There is a threaded stud that allows for attachment of various racking and struts.

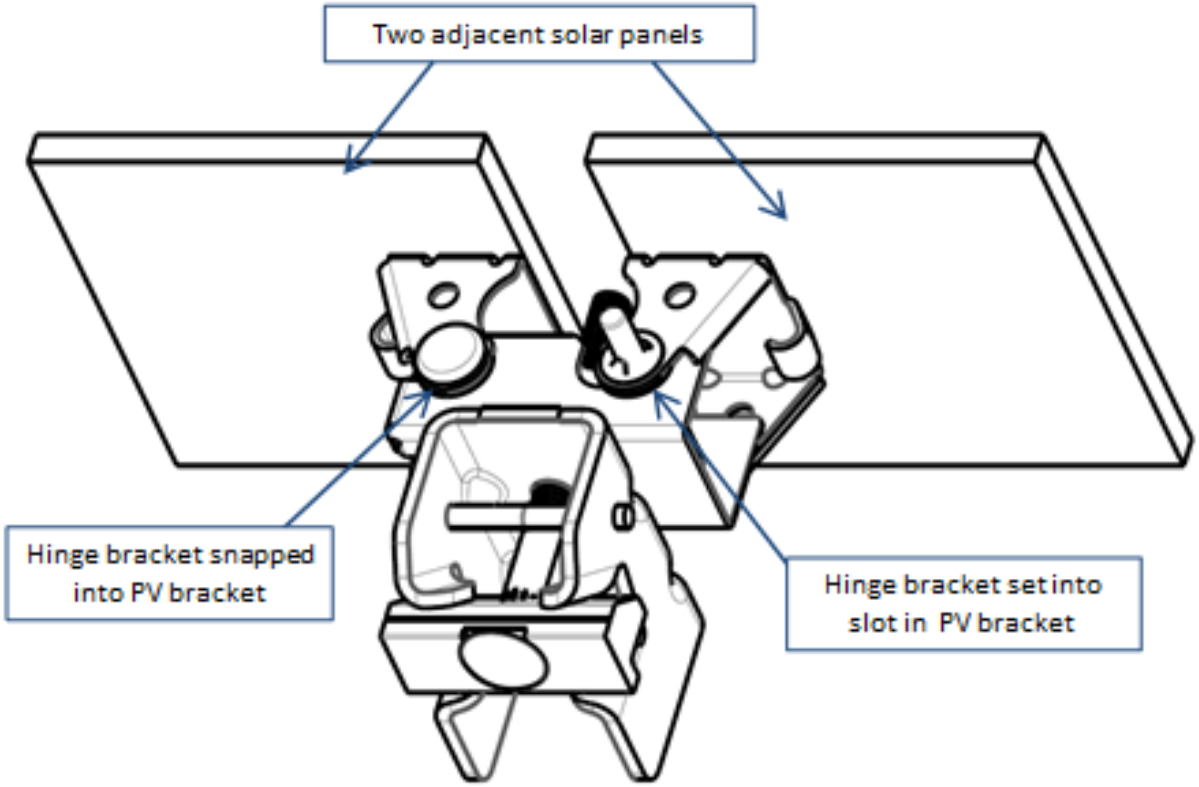
Two adjacent solar panels
Hinge bracket snapped into PV bracket
Hinge bracket set into slot in PV bracket

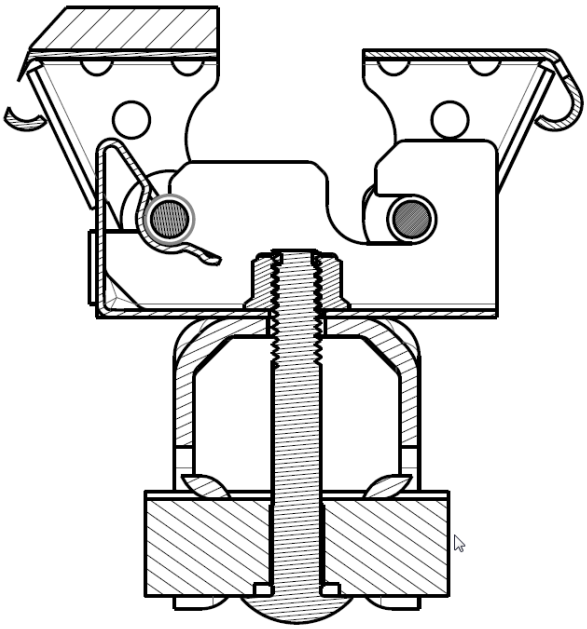

Model

- **Material**

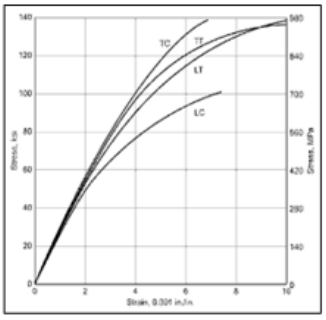

Stainless steel C301 ½ Hard as rolled conditions : (Allegheny Ludlum data)

Young's modulus : **180000Mpa** Yield strength : **530MPa**

Poisson coefficient : **0,3** Strain at break : **18%**

An elastic-plastic stress-strain curve is used in the simulation.

It is the curve named LT in the graph : Longitudinal direction in Tension.

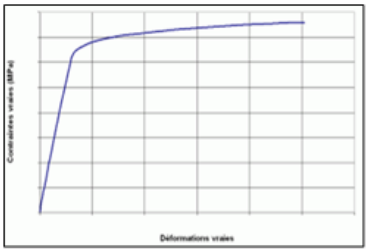

Quenched steel 1050-1065 45-50HRc

This steel is assumed to have the same mechanical characteristics of the C67S, for which we have internal and accurate data for simulation. Those data are used in the simulation :

Young's modulus : **215000 MPa** Yield strength : **1240 MPa**

poisson coefficient : **0,3** Considère's criterion : **3,5 %**

Considère'criterion can be interpreted as the strain at break of the material.

An elastic-plastic stress-strain curve is used in the simulation.

- **Model information**

55.000 nodes, 43.000elements, linear hexahedrons with reduced integration C3D8R

169.000 dof

Solver : Abaqus explicite 6.11-1

Model : Pull-Out

- **Boundary conditions**
  - Contact with friction taken into account, coefficient: 0.1
  - Symmetry conditions : only ½ of the part is modeled. All the forces are multiplied by 2 to take into account that symmetry.

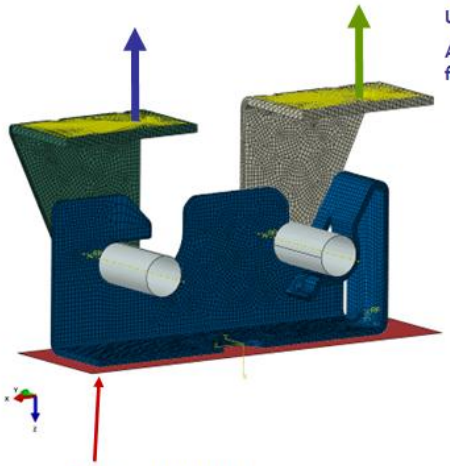

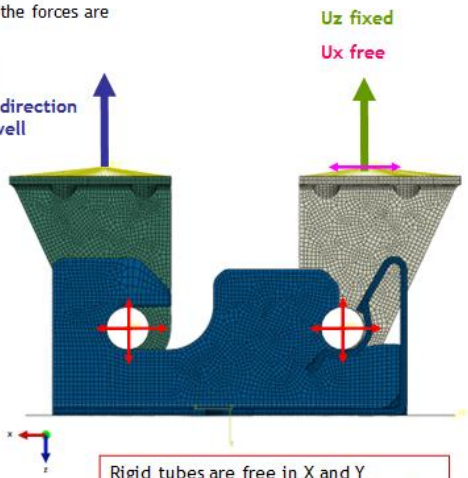

Rigid tubes are free in X and Y direction, they can move into the plan

G2 : Ø6mm tubes

G5 : Ø8mm tubes

Model : Insertion

- **Boundary conditions**
  - Contact with friction taken into account, coefficient: 0.1
  - Symmetry conditions : only ½ of the part is modeled. All the forces are multiplied by 2 to take into account that symmetry.

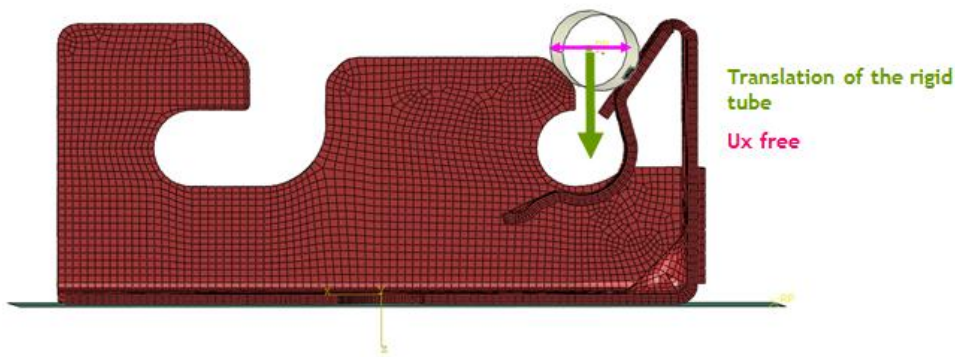

Results : G2 - C301 1/4Hard (actual part) - Insertion

- Estimation of the plasticity. Forces are already multiplied by 2 to take into account the symmetry :

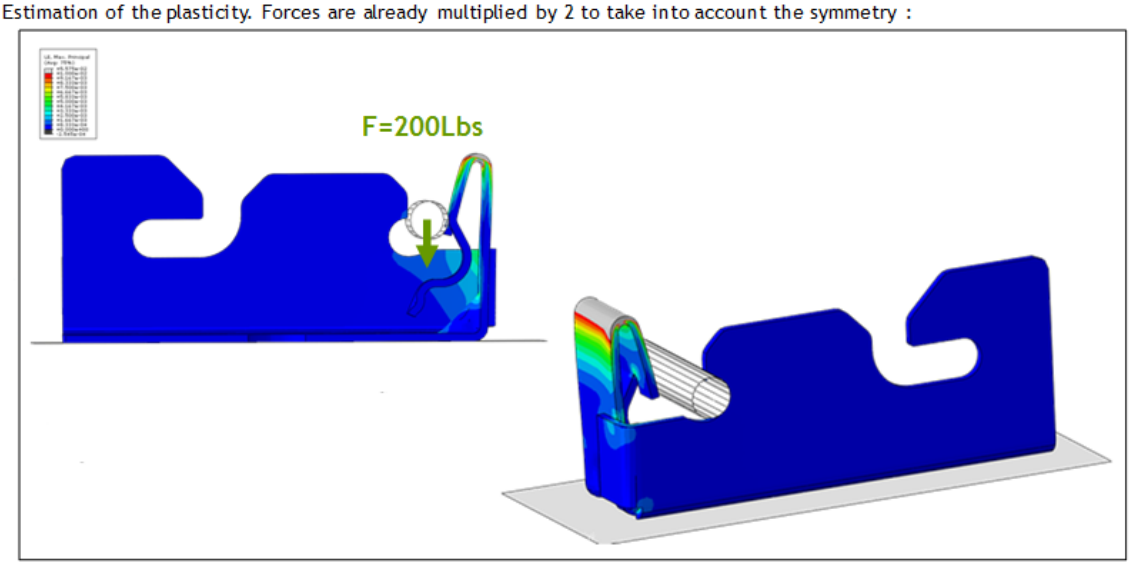

- Scale : 0-1%. Grey areas are greater than 1%. 1% is a typical limit not to exceed to limit the plastic deformation, and therefore limit the permanent deformation after spring back. The strain over exceed 1% on a significant area → The simulation indicates a **risk of residual deformation after the insertion of the 6mm tube.**

Results : G2 - C301 1/4Hard (actual part) - Pull-Off - Yield

- Estimation of the plasticity, Von Mises stresses. Forces are already multiplied by 2 to take into account the symmetry :

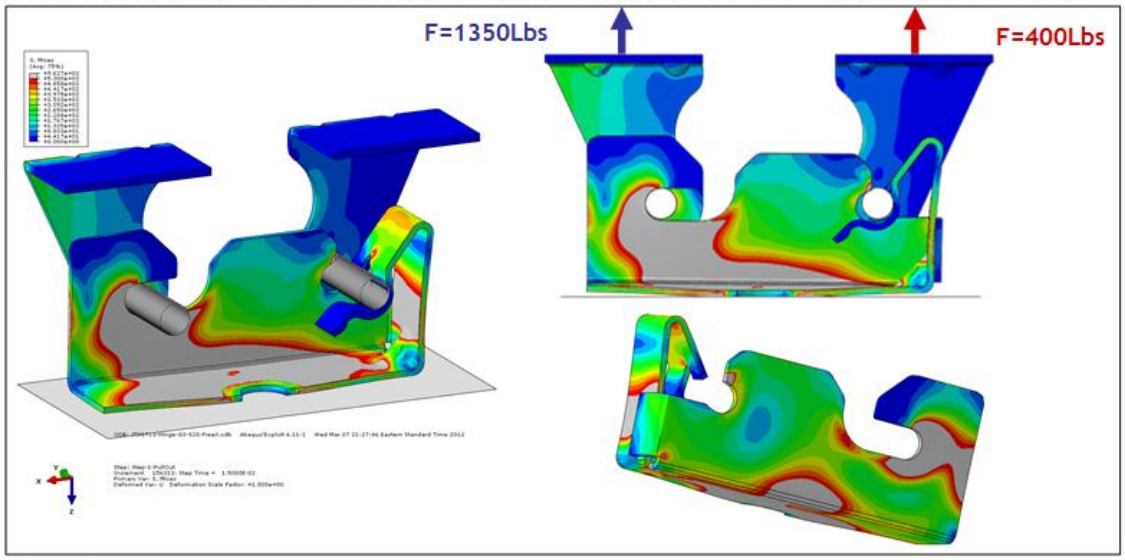

- Scale : 0-530 Mpa. Grey areas are those where the yield strength is over exceeded. I estimate a risk of yield and residual deformation when the yield strength is over exceeded on a significant area.
- The simulation indicates a **risk of residual deformation under forces of 1050Lbs and 400Lbs, depending on the bracket.**

Results : G5 -HT steel 1050-1060 - Insertion

- Forces are already multiplied by 2 to take into account the symmetry :

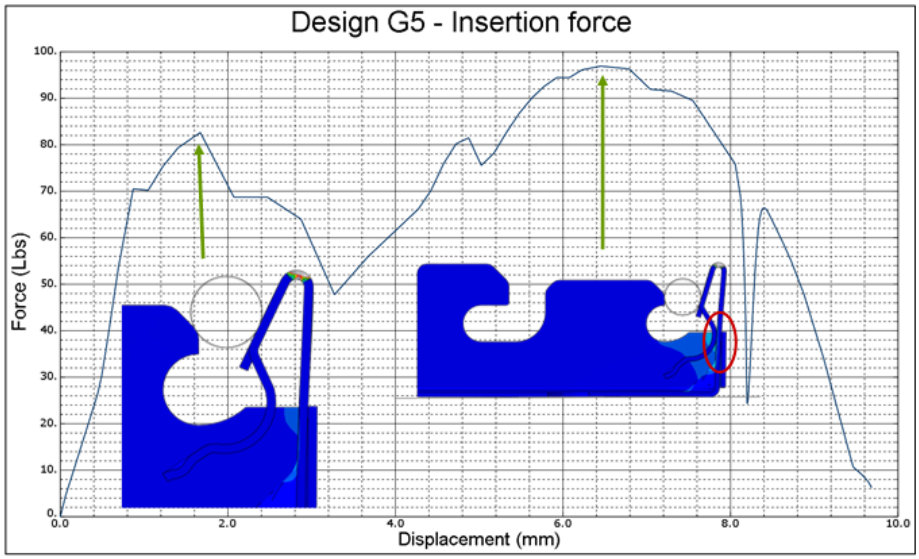

- We see 2 peaks of forces : One due to the slope of the bracket, and one due to the self-contact. Anyway, those peaks are at 80 and 96Lbf, too high.
- Recommendations : increase the angle for insertion, prevent the self-contact by changing the diameter to 6mm. See illustration last slide.

Results : G5 -HT steel 1050-1060 - Insertion

- Estimation of the yield. Forces are already multiplied by 2 to take into account the symmetry :

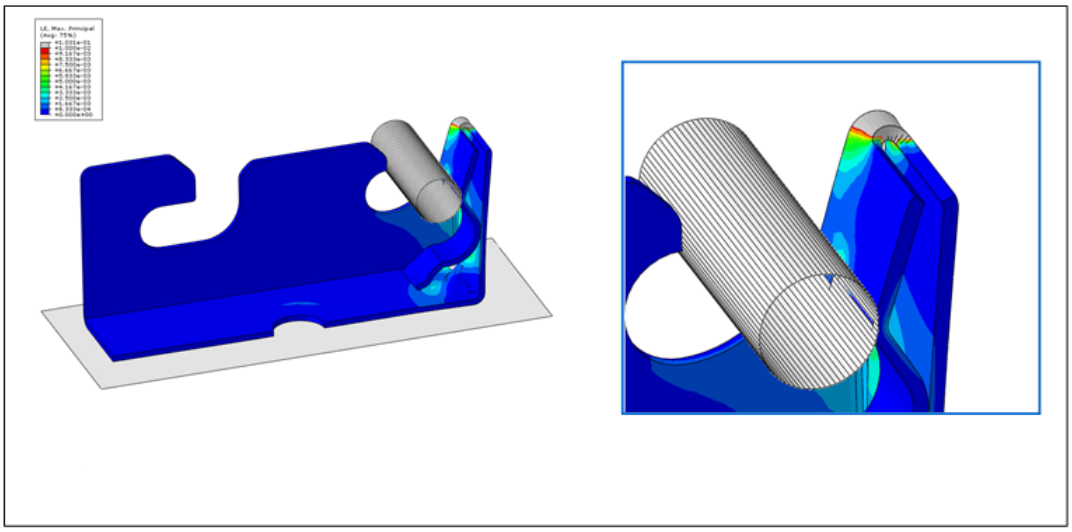

- Scale : 0-1%. Grey areas are greater than 1%. 1% is a typical limit not to exceed to limit the plastic deformation, and therefore limit the permanent deformation after spring back. The strain over exceed 1% on a significant area → The simulation indicates a **risk of residual deformation after the insertion of the 8mm tube.**
- We can see that the stresses are really concentrated in the narrow area. **Recommendation : increase the cut on the height of the clip, to have a better repartition of the stresses. See last slide for illustration.**

Results : G5 - HT steel 1050-1060 - Pull-Off - Yield

- Estimation of the rupture, Max principal strain. Forces are already multiplied by 2 to take into account the symmetry :

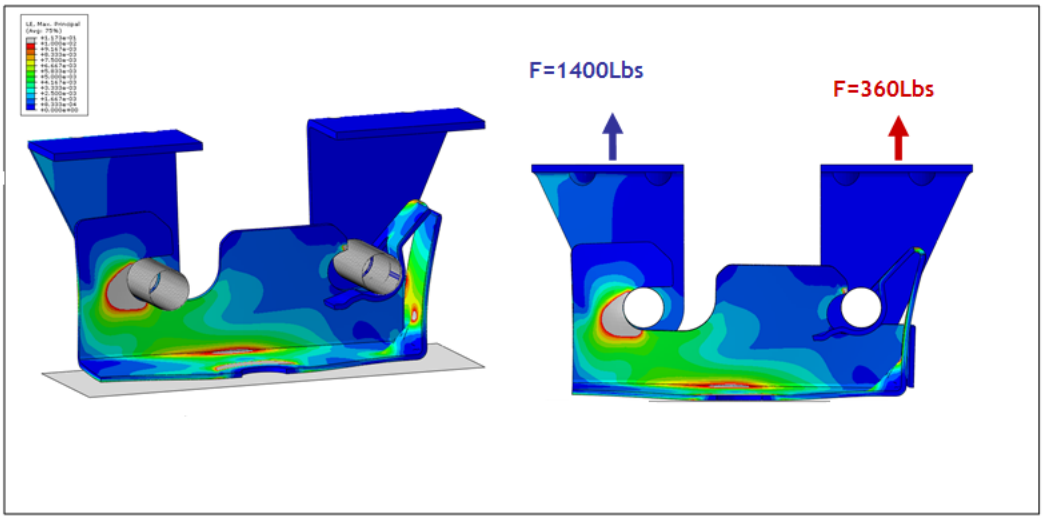

- Scale : 0-1%. Grey areas are greater than 1%. 1% is a typical limit not to exceed to limit the plastic deformation, and therefore limit the permanent deformation after spring back. The strain over exceed 1% on a significant area → The simulation indicates a **risk of residual deformation under 1400 and 360Lbs.**
- Forces on the actual part are 1350 and 400Lbs. We are in the same order of magnitude.

Conclusion

	Thickness	Tubes Ø	Material	Insertion	Yield at pull-off	
					F1	F2
G2 (actual prototype part)	1.2mm	6mm	C301 1/4Hard	200Lbs	1350Lbs	400Lbs
G5	1mm	8mm	HT steel 1050-1060	96Lbs	1400Lbs	360Lbs

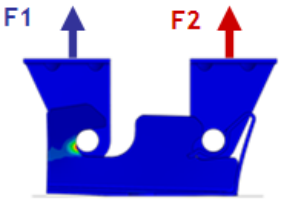

- On the actual design :
  - The simulation indicates a risk of residual deformation after the insertion of the 6mm tube.
  - The insertion force is very high, about 200Lbs. This force is likely accurate, it was not possible to assemble by hand and therefore snapped in on a hydraulic press.
- On the new design G5 :
  - We see 2 peaks of forces : One due to the slope of the bracket, and one due to the self-contact. Anyway, those peaks are at 80 and 96Lbf, too high. The simulation indicates a risk of residual deformation after the insertion of the 8mm tube.
  - The extraction forces are in the same order of magnitude of the actual part.
- Sum-up of recommendations :

Increase the angle of the face in contact with the tube during insertion, in order to decrease the insertion force

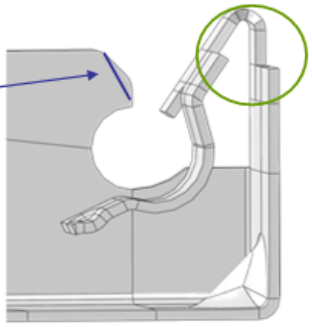

Increase the cut to have a better repartition of stresses

Go back to a 6mm tube to limit the maximum deformation of the bracket and prevent the risks of self-contact during insertion

Task 2: Prototype Development (Budget Period 1)

Task objective:

Produce prototypes based on concepts from task #1 that can be performance tested.

Highlights:

Each system concept from task #1 required prototype components for testing. All brackets were produced with heat treated and plated steel. Support bases were vacuum formed and made with high density polyethylene. The pultruded support rail is made of glass filled polyurethane. Each component concept was evaluated for general tolerance fit/function as well as manufacturability prior to final prototype build. The prototyped components include:

	System		
Prototyped Component	**Bonded Bracket with Pultrusion**	**Bonded Bracket Angled Base**	**Bonded Bracket / Standing Seam**
Bonded Snap/Attachment Bracket	■	■	
Bonded Hinge/Hook Bracket	■		
Vacuum Formed Support Base (Pultrusion Design)	■		
Vacuum Formed Support Base (Angled Base Design)		■	
Engagement Bracket		■	
Locking Plate		■	
Ballast		■	
PV Bracket			■
Hinge Bracket			■
Pultruded Rail	■		

Task 3: Prototype Validation (Budget Period 1)

Task objective:

Validate performance criteria for system components and assemblies.

Highlights:

Following the development of prototype system components and assemblies, performance characteristics estimated during finite element analysis needed to be verified. FEA assumptions included criteria from UL1703 and UL 2703. Due to the timing of prototype availability and the end of budget period one, not all testing was completed prior to project close. During the project focus turned to commercial flat roofs and away from standing seam roofs therefore, no validation was started on system #3 *(Bonded Bracket /Standing Seam*). Initial mechanical testing and bond verification are shown below.

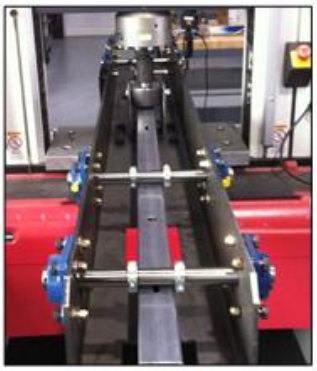

Composite pultrusion profiles were tested for beam strength / stiffness. Utilizing an Instron 3382 tensile machine and custom fixture , load and deflection at fracture were determined for both 3 panel and 4 panel arrangements.

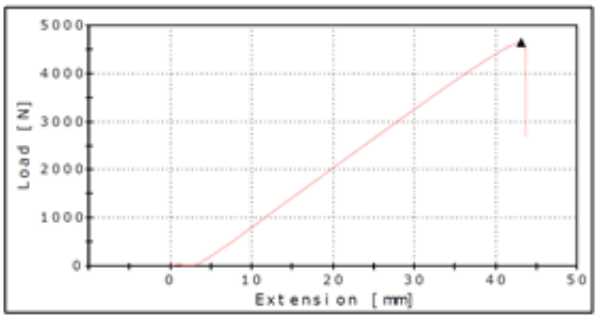

	Extension at Maximum Load [mm]	Maximum Load [N]
1	43.04245	4,646.29053

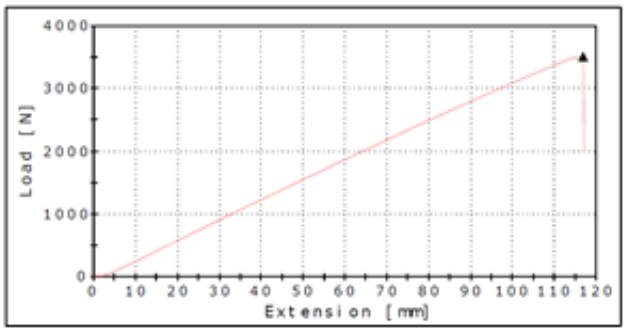

	Extension at Maximum Load [mm]	Maximum Load [N]
1	116.70914	3,513.42896

	3 Solar Panel System	4 Solar Panel System
Deflection mm	43	116
Load N	4646	3513

Testing simulated the utilization of only two support bases for each arrangement. The 4 panel system has a larger distance between support bases.

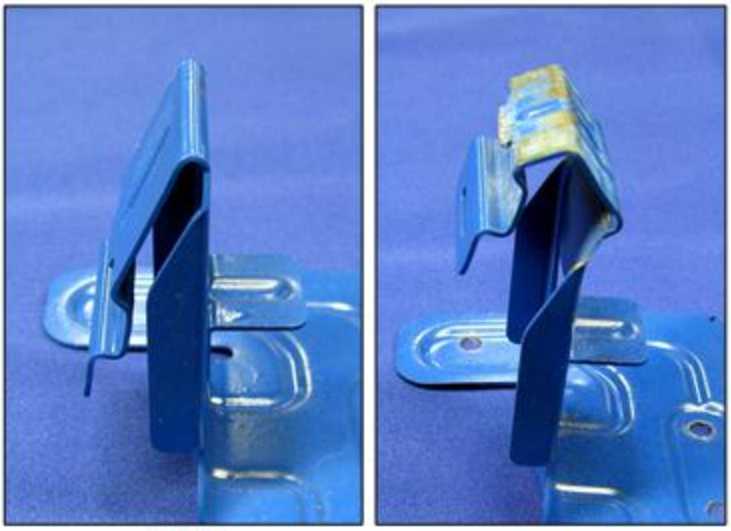

Initial Post Test

The joint between the attachment (snap) bracket and the mating slot in the pultrusion was tested. The joint failed as the metal bracket deformed and pulled through the slot. Performance significantly exceeded criteria outlined in prior FEA information.

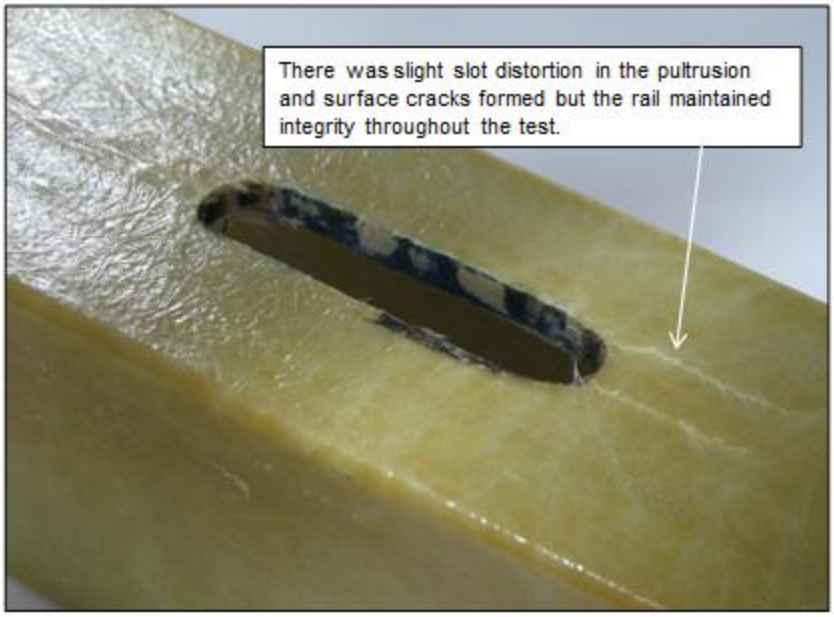

Angled system attachment joint

Test Fixture

The joint between the attachment (snap) bracket and the mating slot in the engagement bracket/locking plate was tested. The attachment bracket fractured at 595 lbs. and 1.56in deflection. The vacuum formed base section, engagement bracket and locking plate were not damaged.

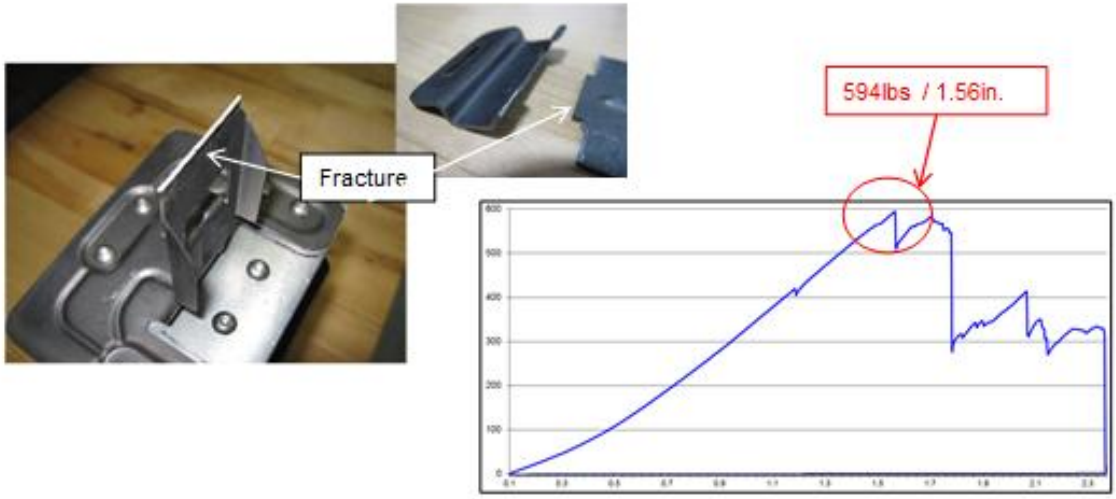

Bond Validation

- Bonding test were completed with a standard part:
  - Steel stud
  - Surface teatment: Zn + cataphoresis
  - Bonding surface: 450 mm²
  - Raybond adhesive: Techbond® PUR2 Max, tablets Ø10mm, 135mg
- Bonding were done on Würth Solar laminated glass
  - Activation of the surface with silane promoter: Betawipe VP04604
  - Preheating of glass at 80°C
- Pull off performances have been tested:
  - At initial state
  - After internal humidity ageing tests
  - After ageing tests from DIN EN 61646
- Specification:
  - 2400 Pa in tensile strength for a 600x1200 PV panel
  - 4 studs / panel
  - ➔ **min. 432 N / stud**

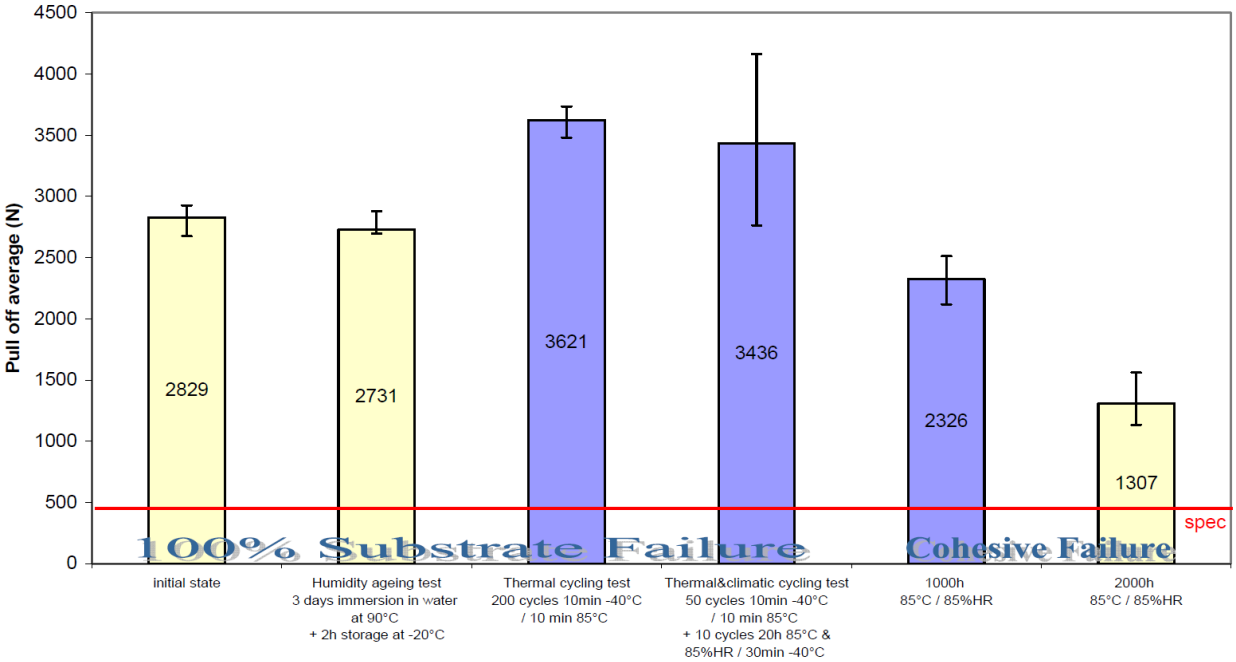

Results

A current industry mounting system was purchased from a competitor to provide a baseline for typical installation times. This was compared to a time study completed with the bonded bracket w/ pultrusion system.

Actual System Currently Marketed	
Step	Accumulated Time
Block setup	1:29
Attach wind deflector	3:05
Assemble brackets to panel	4:47
Assemble panel to blocks	6:23
Attach ground wire	7:02
Panel wire assembly	7:22

Time to install one solar panel - 7:22

ARTI 3 Panel System Assembly	
Step	Accumulated Time
Assemble rail to base and add ballast.	1:41
Panel Assembly	2:43
Panel Wire Assembly	2:55

Time to install three solar panels - 2:55 or 58 seconds per panel.

Total average time to install one solar panel is reduced from 7 minutes 22 seconds to 58 seconds which is a reduction of 87%

Cost Impact Table 2 - Commercial Rooftop:

Cost Component	Units	Baseline Present	Improved Present	Improved FY 2014	Improved FY2017
Combiner boxes	$ / W	$0.0172			
DC, AC-Disconnects	$ / W	$0.0107			
Electrical Labor	$ / W	$0.1828	$0.1828	$0.0914	$0.0914
Fuses and Holders	$ / W	$0.0056			
Grid interconnect	$ / W	$0.0093			
Hardware Labor	$ / W	$0.3107	$0.1450	$0.0414	$0.0414
Inverter	$ / W	$0.3700			
Land	$ / W	$0.0000	$0.0000	$0.0000	$0.0000
Markup on materials	$ / W	$0.5466	$0.0059	$0.0154	$0.0154
Meter	$ / W	$0.0394			
Module	$ / W	$2.0475			
Mounting (racking) hardware	$ / W	$0.2956	$0.0333	$0.1125	$0.1125
Overhead	$ / W	$0.1579	$0.0113	$0.0046	$0.0046
Permitting	$ / W	$0.2316	$0.2316	$0.2316	$0.0926
Profit	$ / W	$0.0987	$0.0073	$0.0030	$0.0030
Sales Tax	$ / W	$0.2107	$0.0291	$0.0237	$0.0173
Site Prep	$ / W	$0.0000	$0.0000	$0.0000	$0.0000
Storage	$ / W	$0.0000	$0.0000	$0.0000	$0.0000
System Monitor	$ / W	$0.0324			
Tracker	$ / W	$0.0000	$0.0000	$0.0000	$0.0000
Wiring (including connectors, conduit)	$ / W	$0.0163	$0.0163	$0.0163	$0.0163
Total		**$4.5830**	**$0.6627**	**$0.5399**	**$0.3945**
Total (items relative to Topic 2)		$2.0509			
NOTE: All calculations assume 240 watts per panel.					
Concept Evolutions >>>>>>>		Current design with nuts, bolts & washers	Framed panel with integral snap brkts	Unframed panel w/ bonded brackets	Unframed bond brkt (permit cost reduced)

Baseline labor was given at a total of $.4935/watt and the full year 2014 total target was $.1328/watt for a percentage target reduction of 73%. The actual labor reduction percentage was 87%.

	Bonded Bracket w/ Pultrusion			Bonded Bracket Angled Mount		
	Quantity	Cost	Total	Quantity	Cost	Total
Vacuum Base	2	$13.43	$26.86	1	$19.00	$19.00
Pultrusion (Feet)	16	$0.80	$12.80			
Bonded Snap Bracket	6	$0.80	$4.80	4	$0.80	$3.20
Bonded Hook/Hinge Bracket	6	$0.82	$4.92			
Engagement Bracket				4	$0.42	$1.68
Locking Plate				4	$0.15	$0.60
Bonding	12	$0.50	$6.00	4	$0.50	$2.00

The project assumes 240 watts per panel.

Total	$55.38
# of Panels	3
Cost / Panel	$18.46
Cost / Watt	$0.08

Total	$26.48
# of Panels	1
Cost / Panel	$26.48
Cost / Watt	$0.11

The full year 2014 mounting hardware target was $.1125/watt. Both the bonded bracket w/ pultrusion and bonded bracket angled mount are below the target.

Cost Impact Table 2 - Commercial Rooftop:

Cost Component	Units	Baseline Present	Improved Present	Improved FY 2014	Improved FY2017
Combiner boxes	$ / W	$0.0172			
DC, AC-Disconnects	$ / W	$0.0107			
Electrical Labor	$ / W	$0.1828	$0.1828	$0.0914	$0.0914
Fuses and Holders	$ / W	$0.0056			
Grid interconnect	$ / W	$0.0093			
Hardware Labor	$ / W	$0.3107	$0.1450	$0.0414	$0.0414
Inverter	$ / W	$0.3700			
Land	$ / W	$0.0000	$0.0000	$0.0000	$0.0000
Markup on materials	$ / W	$0.5466	$0.0059	$0.0154	$0.0154
Meter	$ / W	$0.0394			
Module	$ / W	$2.0475			
Mounting (racking) hardware	$ / W	$0.2956	$0.0333	$0.1125	$0.1125
Overhead	$ / W	$0.1579	$0.0113	$0.0046	$0.0046
Permitting	$ / W	$0.2316	$0.2316	$0.2316	$0.0926
Profit	$ / W	$0.0987	$0.0073	$0.0030	$0.0030
Sales Tax	$ / W	$0.2107	$0.0291	$0.0237	$0.0173
Site Prep	$ / W	$0.0000	$0.0000	$0.0000	$0.0000
Storage	$ / W	$0.0000	$0.0000	$0.0000	$0.0000
System Monitor	$ / W	$0.0324			
Tracker	$ / W	$0.0000	$0.0000	$0.0000	$0.0000
Wiring (including connectors, conduit)	$ / W	$0.0163	$0.0163	$0.0163	$0.0163
Total		**$4.5830**	**$0.6627**	**$0.5399**	**$0.3945**
Total (items relative to Topic 2)		$2.0509			