Final Technical Report

Award Number:	DE-EE0003478
Project Title:	Ultra-High Efficiency and Ultra-low Emissions Combustion Technology for Manufacturing Industries.
Project Period:	10:2010 – 12:2012
Principal Investigator:	Arvind Atreya; 734-647-4790; aatreya@umich.edu.
Recipient Organization:	Regents of the University of Michigan; Research Administration, 3003 South State Street, 1060 Wolverine Tower, Ann Arbor, MI 48109-1274.
Other Project Team	NIST (Dr. Howard Baum, Emeritus for modeling)
Member Organizations:	Various companies for commercialization and implementation
Date of Report:	March 31, 2013

Acknowledgment: This report is based upon work supported by the U. S. Department of Energy under Award No. DE-EE0003478.

Disclaimer: Any findings, opinions, and conclusions or recommendations expressed in this report are those of the author(s) and do not necessarily reflect the views of the Department of Energy.

Proprietary Data Notice: None.

TABLE OF CONTENTS

Table of Contents 3

Executive Summary 4

1.0 INTRODUCTION 5

2.0 BACKGROUND AND THE RFC TECHNOLOGY 5

3.0 RESULTS AND DISCUSSION 8

4.0 BENEFITS ASSESSMENT 18

5.0 COMMERCIALIZATION 20

6.0 ACCOMPLISHMENTS 20

7.0 CONCLUSIONS 21

8.0 RECOMMENDATIONS 21

Executive Summary

The purpose of this research was to develop and test a transformational combustion technology for high temperature furnaces to reduce the energy intensity and carbon footprint of U.S. manufacturing industries such as steel, aluminum, glass, metal casting, and petroleum refining. A new technology based on internal and/or external Flue Gas Recirculation (FGR) along with significant enhancement in flame radiation was developed. It produces "Radiative Flameless Combustion (RFC)" and offers tremendous energy efficiency and pollutant reduction benefits over and above the now popular "flameless combustion." It will reduce the energy intensity (or fuel consumption per unit system output) by more than 50% and double the furnace productivity while significantly reducing pollutants and greenhouse gas emissions (10^3 times reduction in NOx and 10 times reduction in CO & hydrocarbons and 3 times reduction in CO_2). Product quality improvements are also expected due to uniform radiation, as well as, reduction in scale/dross formation is expected because of non-oxidative atmosphere.

RFC is inexpensive, easy to implement, and it was successfully tested in a laboratory-scale furnace at the University of Michigan during the course of this work. A first-ever theory with gas and particulate radiation was also developed. Numerical programs were also written to design an industrial-scale furnace. Nine papers were published (or are in the process of publication). We believe that this early stage research adequately proves the concept through laboratory experiments, modeling and computational models. All this work is presented in the papers. However, due to lack of time, conditions with gas radiation augmented by particulate radiation were not tested. We could also not test the multi-fuel capability and evaluate the benefits in an industrial furnace with our industrial partners.

Important conclusions of this work are: (1) It was proved through experimental measurements that RFC is not only feasible but a very beneficial technology. (2) Theoretical analysis of RFC was done in (a) spatially uniform strain field and (b) a planar momentum jet where the strain rate is neither prescribed nor uniform. Four important non-dimensional parameters controlling RFC in furnaces were identified. These are: (i) The Boltzmann number; (ii) The Damkohler number, (iii) The dimensionless Arrhenius number, and (iv) The equivalence ratio. Together they define the parameter space where RFC is possible. It was also found that the Damkohler number must be small for RFC to exist and that the Boltzmann number expands the RFC domain. The experimental data obtained during the course of this work agrees well with the predictions made by the theoretical analysis. Interestingly, the equivalence ratio dependence shows that it is easier to establish RFC for rich mixtures than for lean mixtures. This was also experimentally observed. Identifying the parameter space for RFC is necessary for controlling the RFC furnace operation. It is hoped that future work will enable the methodology developed here to be applied to the operation of real furnaces, with consequent improvement in efficiency and pollutant reduction.

To reiterate, the new furnace combustion technology developed enables intense radiation from combustion products and has many benefits: (i) Ultra-High Efficiency and Low-Emissions; (ii) Uniform and intense radiation to substantially increase productivity; (iii) Oxygen-free atmosphere to reduce dross/scale formation; (iv) Provides multi-fuel capability; and (v) Enables carbon sequestration if pure oxygen is used for combustion.

1.0 Introduction

This project arises from the importance of manufacturing and the amount of energy consumed in manufacturing. It developed a transformational ultra-high efficiency and ultra-low emissions combustion technology for high-temperature furnaces to reduce the energy intensity and carbon footprint of U.S. manufacturing industries such as steel, aluminum, glass and petroleum. It provides a large energy savings potential ~ 260 TBtu/yr by 2020.

This new combustion technology that was developed is called "Radiative Flameless Combustion (RFC)." It is based on an innovative concept: High degree of heat recirculation facilitated by intense dilution of reactants by hot flue gases significantly increases furnace efficiency and radiation without creating NOx, even with oxygen enriched air. It is inexpensive and easy to implement in design, construction and operation of new gas-fired furnaces, as well as, for retrofit applications.

This transformational technology is expected to reduce the energy intensity (or fuel consumption per unit system output) by more than 50% and double the furnace productivity while significantly reducing pollutants and greenhouse gas emissions (10^3 times reduction in NOx, 10 times reduction in CO & hydrocarbons, and 3 times reduction in CO_2). Product quality improvements are also expected due to uniform radiation, as well as, reduction in scale/dross formation is expected because of non-oxidative atmosphere.

Potential Impact: The potential markets for this new technology are energy intensive industries with significant process heating component such as aluminum, steel, glass, petroleum, and metal casting. Data in the table below is obtained from EIA and MECS.

INDUSTRY	*Energy usage (Quads)*	*Sales ($ billions)*	*% energy used manufacturing*	*Employment*	*Comments*
Aluminum	0.5	33	~ 30%	~85,000	Needs to be globally competitive
Iron and Steel	1.4	75	~ 20%	~154,000	Considerable global competition
Glass	0.3	28	~ 11%	~143,000	Limited R&D funds
Petroleum	6.8	219	~ 20%	--	Needs new technology
Metal casting	0.4	25	~ 10%	~250,000	Limited R&D funds not growing

2.0 Background and the RFC technology

The current state-of-the-art of burner technologies to achieve high efficiency and low NOx emissions consist of regenerative air-fuel burners and oxy-fuel burners. These are described and compared in Ref [1][1]. Measurements of [1] show that ~ 0.153 lb/MMBtu NOx and ~ 250 kW/m^2 heat flux can be obtained. Another important non-burner technology is Praxair's Dilute Oxygen Combustion [2][2] where fuel and oxygen are injected separately to allow internal flue gas recirculation. According to [2][2], it produces

[1] Blasiak, W., Krishnamurthy, N., and Yang, W., Evaluation New Combustion Technologies for CO_2 and NOx Reduction in Steel Industries, Air Pollution XII, ISBN: 1-85312-722-1, ISSN:1369-5886, 2004.
[2] M.F. Riley, H. Kobayashi, and A.C. Deneys, "Praxair's Dilute Oxygen Combustion Technology for Pyrometallurgical Applications," JOM, May, 2001.

very low NOx (0.015 lb/MMBtu), increases productivity by ~10% with fuel savings of up to 50% over conventional systems and improves heating uniformity.

The best current technology is dilute oxygen flameless combustion [2][2] because it offers the most advantages over other available technologies. However, it is difficult to control and hence it has not been widely adopted. The technology developed in this project (RFC) significantly improves the technology of [2][2] by recognizing the following facts:

1. The combustion zone mixing, stability, and control can be significantly improved by using buoyancy.
2. The primary mode of heat transfer in furnaces is radiation and we *need high levels of uniform radiation to increase productivity*. Thus, it is advantageous to have radiation directly from the combustion zone which has the highest temperature.
3. Radiation is a volumetric phenomenon hence a thick layer of buoyantly-stabilized high temperature combustion/reaction zone near the furnace ceiling will increase the emissivity of the gases and provide high levels of uniform radiation that will increase productivity.
4. To enhance flame radiation a high concentration of combustion products (primarily CO_2 & H_2O) and some soot is required to be present in the high temperature reaction zone. Thus, oxygen-enriched & slightly fuel-rich combustion is desirable. The amount of soot needed is less than that in a candle flame and it will be burned before exiting the furnace. A few grams of coal dust particles injected with natural gas will also suffice and may serve as a radiation control parameter.
5. Enhancing radiation from the combustion zone further reduces the flame temperature and hence NOx. Also, uniform & intense radiation substantially increases productivity for the same fuel consumption, resulting in reduced energy intensity and a reduction in greenhouse gas emissions (GHGs).
6. Slightly rich combustion zone will also enable NOx reburn reactions to further reduce NOx production.
7. If pure oxygen is used the furnace efficiency is further enhanced and the exhaust products contain only CO_2 & H_2O. Since H_2O is easily condensed, CO_2 can be easily sequestered, if needed.

Based on the above facts, we have developed an improved furnace combustion technology (RFC). It incorporates intense radiation from the combustion volume in addition to flameless combustion. It has many benefits: (i) NO_X is significantly reduced (< 0.015 lb/MMBtu) even when burning in oxygen-enriched air, resulting in an Ultra-High Efficiency and Low-Emissions furnace; (ii) It produces uniform and intense radiation (> 500 kW/m^2) to substantially increase productivity for the same fuel consumption, resulting in reduced energy intensity; (iii) It provides an oxygen-free atmosphere to reduce scale/dross formation – further enhancing energy and material savings; (iv) It can be used with low calorific value fuels; (v) It offers multi-fuel capability; (vi) It reduces energy costs and greenhouse gas emissions, and finally (vii) if pure oxygen is used for combustion the exhaust CO_2 may be easily sequestered without requiring separation.

Brief description of the RFC technology: One implementation of the RFC technology is schematically shown in Figures 1 & 2. Figure 1 is a schematic of the internal FGR

system with optional external FGR for waste heat recovery. Figure 2 is a schematic of just the external FGR system for dilution and waste heat recovery. The two can be used independently or together. In figure 2, only preheating and dilution of oxygen-enriched air by flue gases is shown. However, depending on the circumstances, a similar but separate configuration for preheating and dilution of fuel may also be used. For example, preheating, evaporating and diluting the fuel may be highly desirable if a liquid fuel is used. In Figure 1, separate injections of fuel and oxygen-enriched air are used to ingest burned gases and form an upper layer of highly radiating combustion products that are buoyantly stabilized inside the furnace and recirculated by jet momentum. Since fuel and oxygen/air are injected separately, it is advantageous to preheat them both to capture the exhaust gas enthalpy and to help produce soot. The configurations shown in Figures 1 & 2 lend themselves to multi-fuel capability. In fact, it may be advantageous to spray waste oil or coal dust into the hot ceiling combustion layer to increase radiation. This configuration also enables burning low calorific value fuels like coke-oven gas or biofuels (like bio-oil) and can be used for VOC incineration. It is also worth noting that the residence time of the gases in the reaction zone is much larger than that in the thin flame zone. Thus, the reaction chemistry approaches equilibrium chemistry.

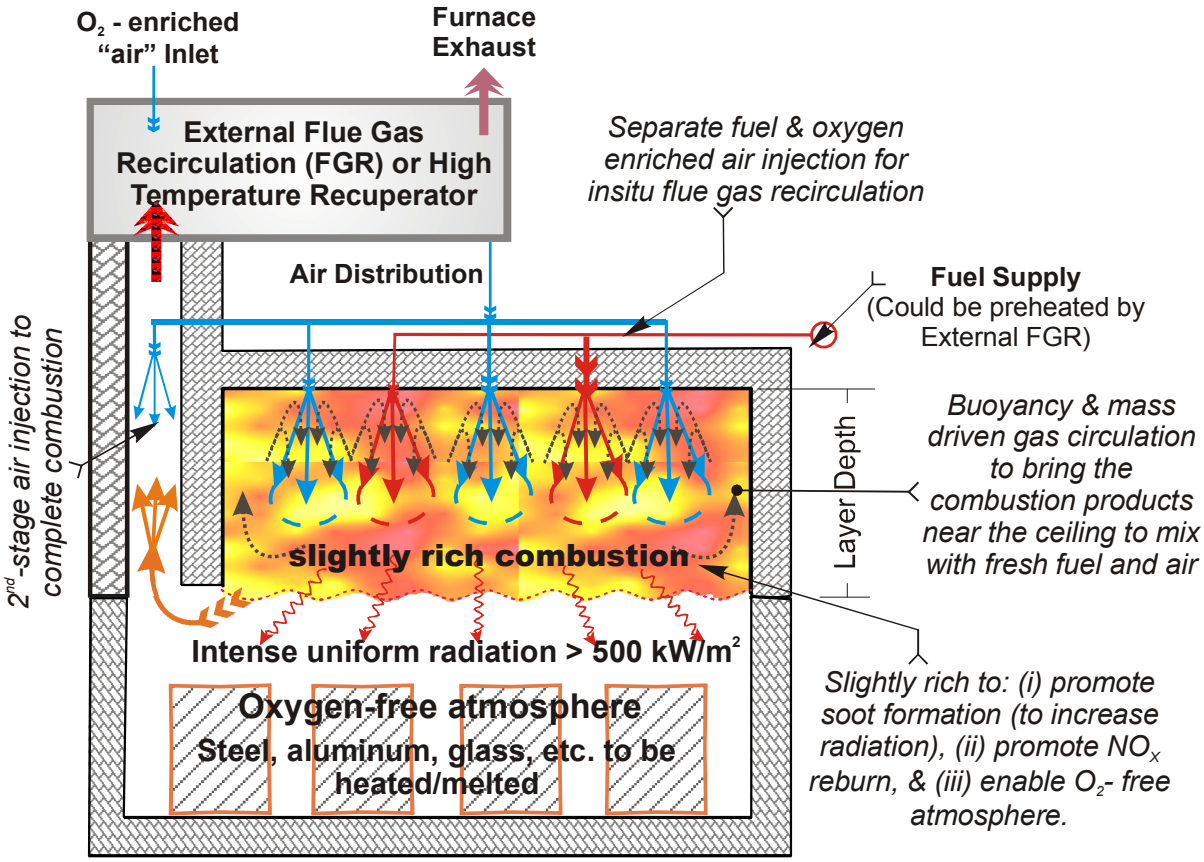

Figure 1: Schematic of the internal flue gas recirculation system with optional external FGR for waste heat recovery to yield RFC in the furnace.

External entrainment of flue gases is shown in Figure 2. Oxygen-enriched air or oxygen is injected at a prescribed flow rate and momentum into the exhaust duct. The high

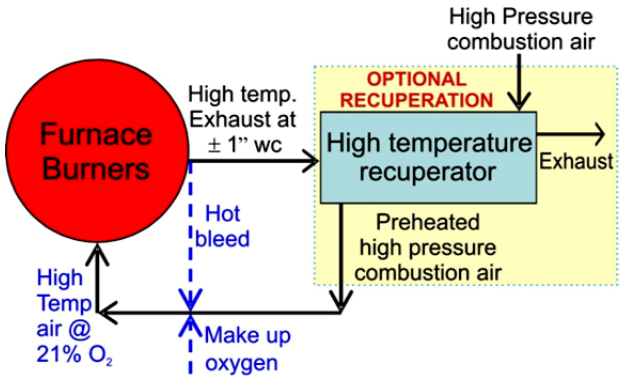

Figure 2a: Schematic of the arrangement

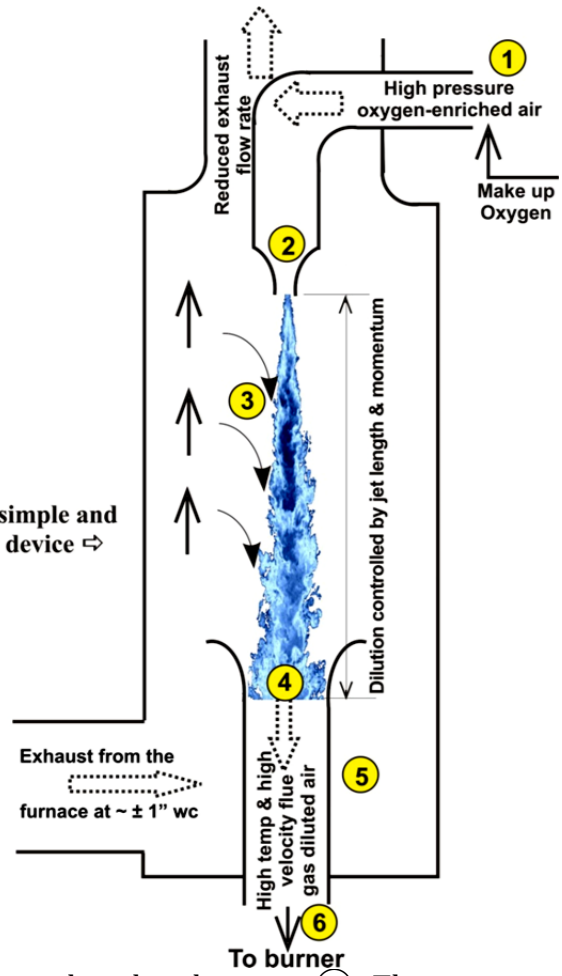

Figure 2b: Schematic of a simple and inexpensive heat recovery device ⇨

FIGURE 2 (FGR-jet): *A simple method to: (i) economically capture the energy lost by the exhaust gases, (ii) provide a long trouble-free operational life of the heat recovery device at a significantly reduced installation cost, (iii) provide a method to control NOx by flue gas recirculation (FGR), (iv) increase furnace gas radiation, (v) can be profitably added even if a high temperature recuperator exists, (vi) can be profitably used with 100% oxygen furnaces, and (vii) does not require burner changes. A schematic of the arrangement is shown in 2(a) & the technique is shown in 2(b).*

pressure oxygen-enriched combustion air is introduced at location ①. The injection nozzle ② converts the high pressure air into a high velocity jet. The jet expands at roughly 12° half angle by entraining the surrounding hot flue gases into it ③. The total mass flow rate of the jet increases while the injected momentum is conserved. The amount of flue gases entrained depends on the length of the exposed jet and the injected momentum. The suitably diluted, reduced velocity, and increased mass and temperature jet enters the accumulating duct at the location ④ where the high velocity is converted back to high pressure required by the existing burners. At location ⑤, O_2 concentration is measured to control the amount of O_2 injected at location ①. This feedback control maintains the O_2 concentration at the desired level. This level depends on the desired dilution and gas temperature for NOx control.

3.0 Results and Discussion

Technical hypothesis guiding this work

The technical basis of this work is shown in Figure 3. This figure was generated using the SANDIA-CHEMKIN code with detailed CH_4 chemistry. Every point in this figure represents burning of 1 mole of CH_4 with different O_2% air. This figure demonstrates the benefits of Radiative Flameless Combustion in comparison with the best technology currently available, namely "flameless combustion". Typical radiative fraction of methane flames is about 10% (fraction of chemical energy released as radiation = heat

loss ratio). This condition is shown in the top left-hand corner of Figure 3. In high-temperature furnaces, the primary mode of heat transfer is radiation. Thus, furnace productivity is directly related to furnace radiation. Thus in Figure 3, heat loss ratio is plotted along the abscissa and CO_2 mole fraction and NO production are plotted along the two ordinates. The two ordinates are normalized by the heat loss ratio to approximately represent CO_2 and NO produced per unit productivity. We note that as heat loss ratio is increased CO_2 falls by at least by a factor of 3 (or 3 times reduction in greenhouse gas production) and NO by 5 orders of magnitude. This is only possible because of radiation. Thus Radiative Flameless Combustion provides more benefits than simple flameless combustion. It was the basis of this work. The desired mode of operation is the bottom right-hand corner, which also burns one mole of CH_4.

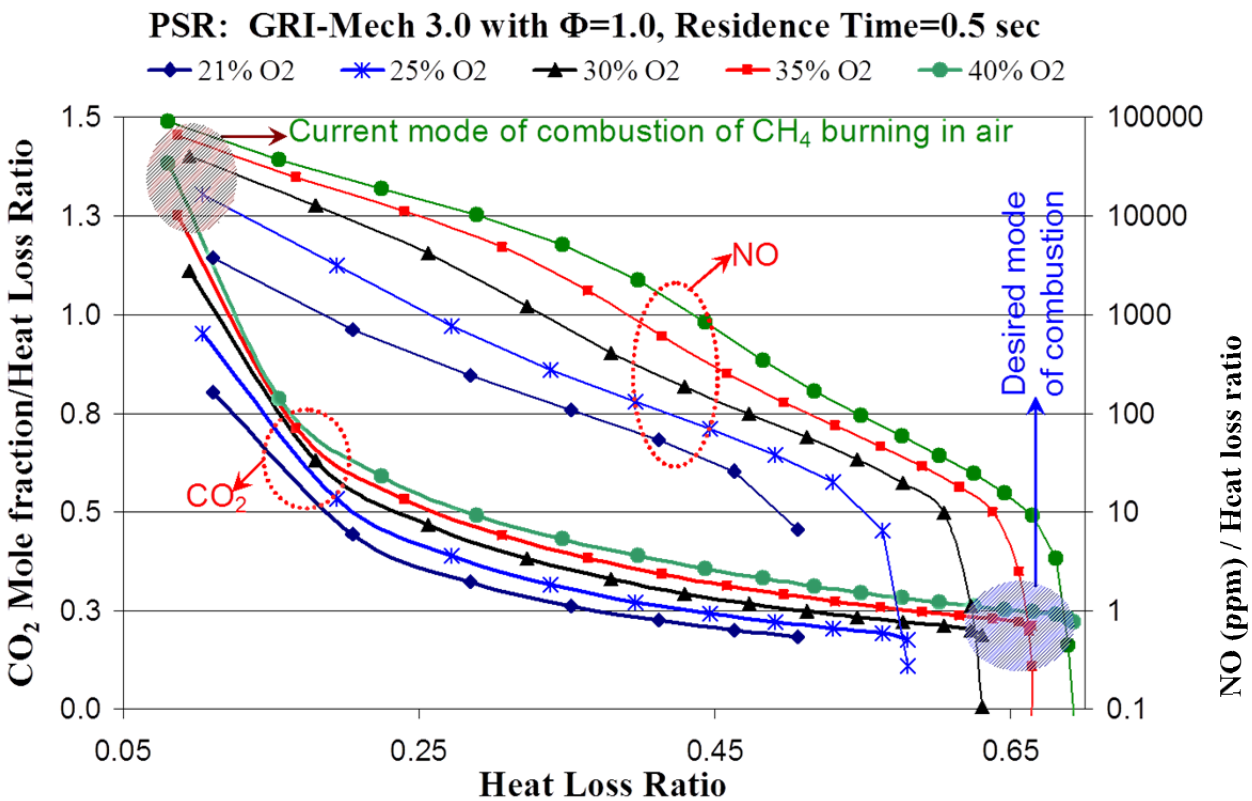

Figure 3: Benefits of Highly Radiative O_2-enriched combustion. Calculations for CO_2 and NO for one mole of CH_4 burning in "air" with different O_2% air & radiation heat loss. Heat Loss Ratio = Radiation energy released / available chemical enthalpy.

Experimental methodology

Apparatus: A laboratory-scale furnace is shown in Figure 4. The furnace is divided into upper and lower chambers in order to access the inside of the furnace. The upper chamber is configured into double shells. The inner shell is the reaction chamber made of insulation material and the outer shell is made of a stainless steel frame lined with insulation material. The nozzle of the fuel jet is located in the center of the reaction chamber ceiling, and four air nozzles are located in a square pattern around the fuel jet and are 280 mm apart from the fuel jet. The separation distance between the fuel and oxidizer jet is fixed in this study. This separation distance is intended for enhancing

entrainment of product gases to achieve the homogeneous combustion condition. The jets are issued vertically down from the ceiling for promoting recirculation of hot product gases also aided by buoyancy. Six exhaust vents are located at the bottom of the reaction chamber. After passing through the exhaust vents, the exhaust gas travels through the co-annular channel between the inner and the outer shells and is extracted into a hood installed on the top of the furnace. A water-cooled heat sink (810 mm diameter) is located on the lower chamber of the furnace, with 250 cm^3/s of cooling water flowing through it. The heated surface of the heat sink is painted black, and the radiative heat release from the reaction zone and the chamber wall is absorbed by the heat sink. Water temperature increase is measured to determine the heat absorbed.

Along the circumference of the furnace, three sets of five sampling ports with ceramic tubes are available. Sampling probes are inserted into these ports to measure the temperature and composition of the reacting gases. The behavior of flame in the reaction chamber is visually monitored through the window opening in the center of the lower chamber of the furnace. The window is made of 3.175 mm thick quartz plate to enable radiation emission in the spectral range from UV to IR to pass through it. Thus UV radiation can be captured by a photo detector. Laboratory air and oxygen are mixed to obtain the desired enrichment of oxygen in the oxidizer. The four oxidizer streams are equally distributed by adjusting the valves of the calibrated flow meters.

Measurement Setup: The spatial distributions of temperature and gas compositions (total unburned hydrocarbon, oxygen, carbon monoxide, carbon dioxide and nitric oxide) in the reaction zone are measured under various furnace operating conditions. The total ultraviolet (UV) emission from the reaction zone is also monitored. The surface temperature of the reaction zone chamber is measured by twelve K-type thermocouples on the wall and the ceiling of the reaction chamber. Temperature and gas composition in the reaction zone are sampled by using a sampling probe made of quartz tube. A metal bellows pump is used to extract gas through the sampling nozzle. The gas analysis equipment setup is schematically shown in Figure 5.

A modified flame ionization detector (Shimadzu Gas Chromatograph GC-3BF) is used to measure the total hydrocarbons (THC). The concentrations of oxygen, carbon monoxide, and carbon dioxide, are measured by SIEMENS Ultra/Oxymat 6E analyzer. NO concentration is measured by a chemiluminescence analyzer (Thermo 42C High Level NO-NO_2-Nox analyzer). Calibration gas (10.03 % CO_2, 4.04 % CO, 22.98 % CH_4, 1.99 % H_2, 1.01 % N_2 and He as balance) is used to calibrate CO, CO_2 and CH_4 and another calibration gas with 57.6 ppm NO and balance N_2 is used for the NO analyzer. Dry air is used to calibrate the O_2 analyzer and N_2 is used as a zero gas.

Experimental Procedure: Since gas preheating was not possible in this work, the inlet temperature of the fuel and oxidizer flows into the reaction chamber is about room temperature. Fuel (natural gas) and oxidizer are heated and diluted by internal flue gas recirculation. In these experiments, the flow rate of fuel is fixed at 1900 cm^3/s and the flow rate of oxidizer is adjusted to get various equivalence ratios and oxygen fractions. The diameter of the circular fuel nozzle is 15.2 mm, the velocity is 10.4 m/s and the flow momentum is 0.0142 N. Circular air nozzles of varying diameters are used (7.94, 15.9 and 31.8 mm) to simultaneously adjust the flow momentum and the equivalence ratio.

In this study, the overall equivalence ratio is in the range of $\Phi_{overall}$ = 0.8, 0.9, 1.0 and 1.1. By mixing oxygen with air, the oxygen mole fraction in the oxidizer jet is adjusted to $X_{O2;ox}$ =0.21, 0.30 and 0.40. Experiments conducted to-date are listed in Table I. Here d_{ox} the diameter of the oxidizer nozzle, V_{ox} the exit velocity from each oxidizer nozzle, and J_{ox} is the flow momentum of each oxidizer nozzle. In the measurement column, 'T' is for temperature, 'U' is for UV emission intensity measurement, 'P' is for visual image, and 'G' is for gas sampling and gas composition measurements.

Table 1: Experimental Conditions and Measurements

Expt. No.	d_{ox} (mm)	$X_{O2,ox}$	$\Phi_{overall}$	V_{ox} (m/s)	J_{ox} (N)	Measurements
D1O30E090	7.94	0.30	0.90	71.04	2.92E-01	T, U, P
D1O30E101	7.94	0.30	1.01	62.83	2.29 E-01	T, U, P
D1O30E100	7.94	0.30	1.00	63.31	2.32 E-01	T, G, U
D1O30E109	7.94	0.30	1.09	57.81	1.94 E-01	T, U, P
D1O31E110	7.94	0.31	1.10	56.28	1.84 E-01	T, G, U
D1O40E089	7.94	0.40	0.89	53.61	1.69 E-01	T, U, P
D1O41E102	7.94	0.41	1.02	45.93	1.24 E-01	T, U, P
D1O40E109	7.94	0.40	1.09	43.63	1.12 E-01	T, U, P
D2O21E081	15.9	0.21	0.81	28.14	1.81 E-01	T, U, P
D2O21E090	15.9	0.21	0.90	25.15	1.45 E-01	T, U, P
D2O21E100	15.9	0.21	1.00	22.78	1.19 E-01	T, U, P
D2O21E103	15.9	0.21	1.03	22.03	1.11 E-01	T, G, U
D2O21E111	15.9	0.21	1.11	20.48	9.60 E-02	T, U, P
D2O29E091	15.9	0.29	0.91	17.98	7.49 E-02	T, U, P
D2O30E091	15.9	0.30	0.91	17.58	7.16 E-02	T, G, U
D2O30E102	15.9	0.30	1.02	15.58	5.63 E-02	T, U, P
D2O30E101	15.9	0.30	1.01	15.67	5.69 E-02	T, G, U
D2O30E110	15.9	0.30	1.10	14.33	4.76 E-02	T, G, U
D2O31E110	15.9	0.31	1.10	14.11	4.62 E-02	T, U, P
D2O40E090	15.9	0.40	0.90	13.36	4.19 E-02	T, U, P
D2O41E103	15.9	0.41	1.03	11.45	3.08 E-02	T, U, P
D2O41E102	15.9	0.41	1.02	11.46	3.09 E-02	T, G, U
D2O40E111	15.9	0.40	1.11	10.76	2.72 E-02	T, U, P
D3O21E079	31.8	0.21	0.79	7.16	4.69 E-02	T, U, P
D3O21E090	31.8	0.21	0.90	6.29	3.62 E-02	T, U, P
D3O21E099	31.8	0.21	0.99	5.72	3.00 E-02	T, U, P
D3O21E111	31.8	0.21	1.11	5.12	2.40 E-02	T, U, P
D3O30E090	31.8	0.30	0.90	4.52	1.89 E-02	T, U, P
D3O30E098	31.8	0.30	0.98	4.12	1.57 E-02	T, U, P
D3O31E110	31.8	0.31	1.10	3.50	1.13 E-02	T, G, U
D3O39E090	31.8	0.39	0.90	3.39	1.08 E-02	T, U, P
D3O39E102	31.8	0.39	1.02	3.02	8.53 E-03	T, U, P
D3O41E111	31.8	0.41	1.11	2.65	6.63 E-03	T, U, P

The coordinate used to locate the measurement point is defined in Figure 4. The Y-direction passes through the center of the oxidizer nozzle with the center of the fuel nozzle as the origin. The X-direction is rotated 45 degrees from the Y-direction. The measurement positions for temperature and gas sampling are the matrix made by X = 0, 75, 150, 230, 305 mm; Z = 220, 430, 640, 850, 1060 mm; Y = 0, 75, 150, 230, 280 mm; and Z = 220, 430, 640, 850, 1060 mm. Here X = 0 mm (or Y = 0 mm) is the location of the fuel nozzle and Y = 280 mm is the location of the oxidizer nozzle. The

thermocouples are installed on the wall at Z = 220, 430, 640, 850, 1060 mm of X and Y direction (i.e. X = 420 mm, and Y = 420 mm).

For a given test condition, in the homogeneous combustion mode, the fluctuations of temperature and gas composition are minimal, so the data are averaged over the test duration. In order to verify the stability of the reaction zone, UV emission from the reaction zone is measured and the visual appearance of the flame (if any) is also recorded. In the flaming combustion mode, radiation associated with OH radical (radiation bands of 281.1 nm and 306.4 nm), which is involved in the chemical reactions is the main source of UV emission. However, in the homogeneous combustion mode, the UV signal falls drastically. This implies that OH concentration must be significantly lower in homogenous combustion than in a conventional flame. Thus, the intensity of the UV radiation from the reaction zone is considered as a measure of determining the onset of homogenous combustion.

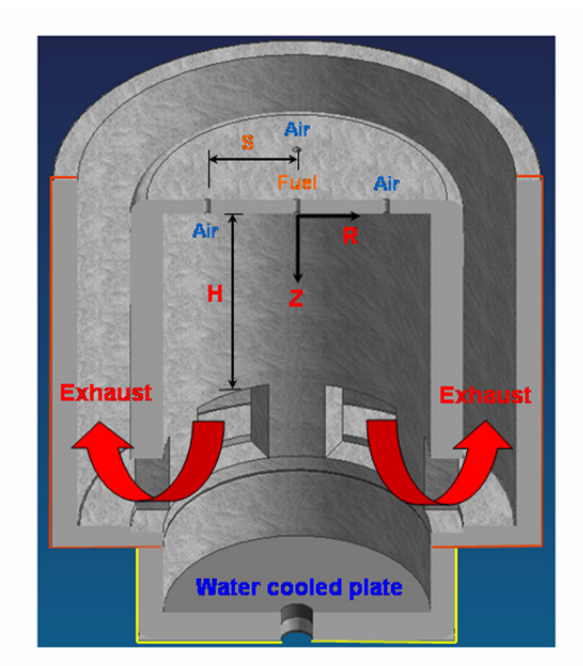

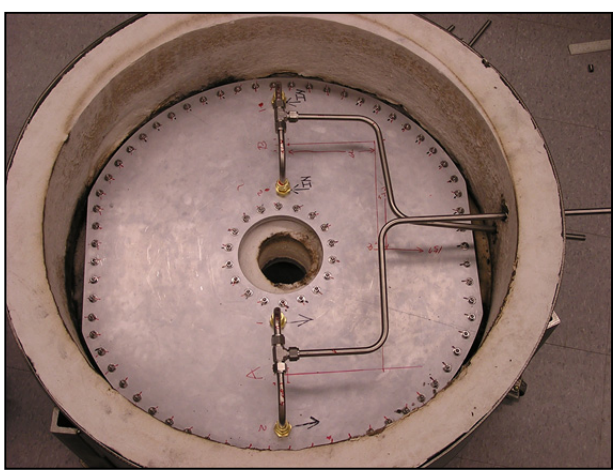

Figure 4 (a): The furnace interior and exterior, and the heat sink.

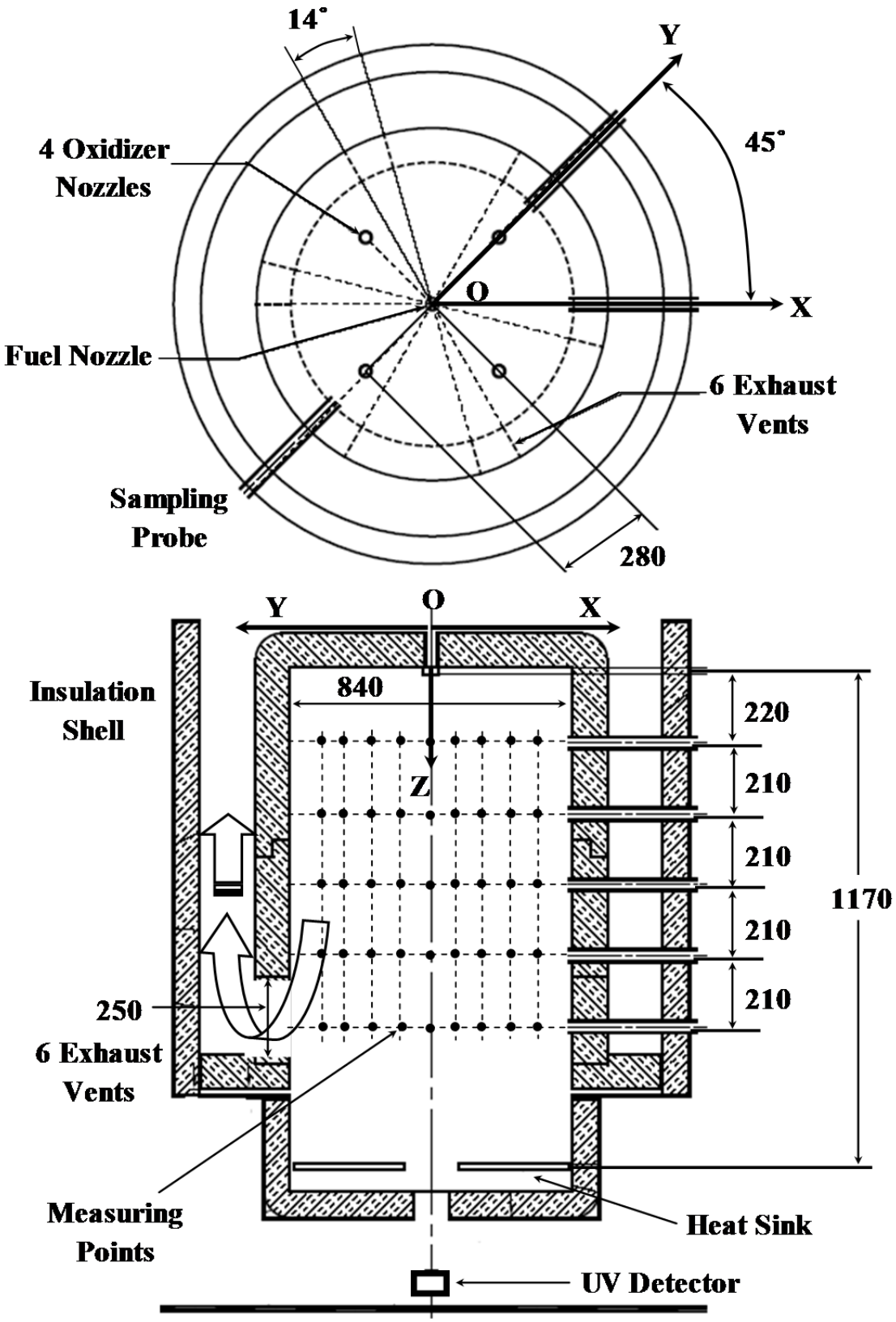

Figure 4 (b): Structure of the furnace and definition of coordinates for measurements.

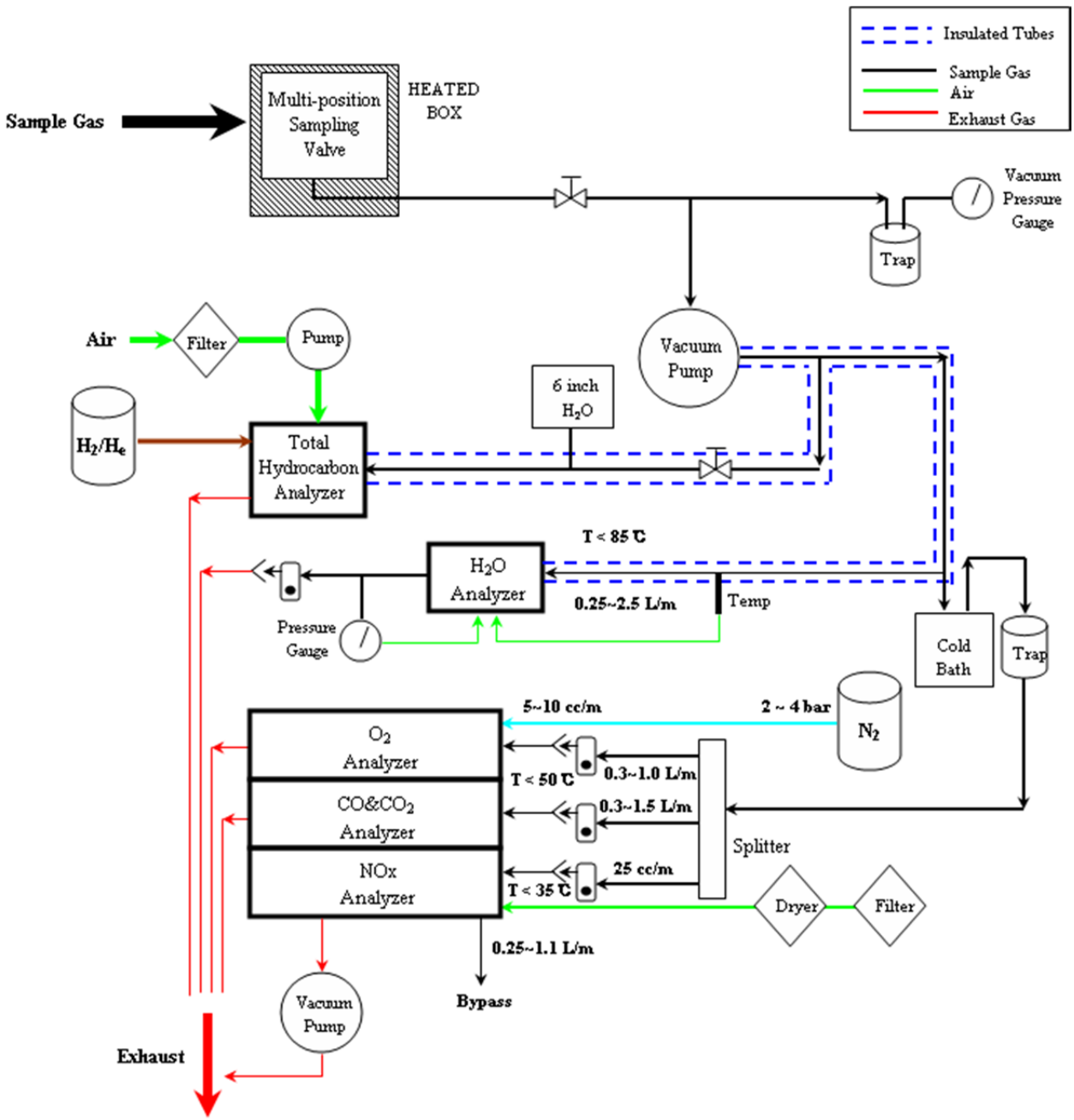

Figure 5: Schematic diagram of the gas analysis system

Presentation and discussion of results

Figure 6 presents photographs of experiments with O_2 nozzle diameter of d_{ox} = 31.8 mm. The photographs were taken from the bottom of the furnace through the peep hole in the water-cooled plate (Figure 4). These 10 cases are listed at the bottom of Table 1. All these cases were not highly radiative because of no soot was produced. Soot was also not produced in the other cases listed in Table 1, which prompted us to do the study presented in publications 1, 2 & 8 listed in the accomplishments section. Thus, all the cases listed in Table 1 may be considered optically thin. The temperature and NO concentration measurements made during these experiments are shown in Figure 7.

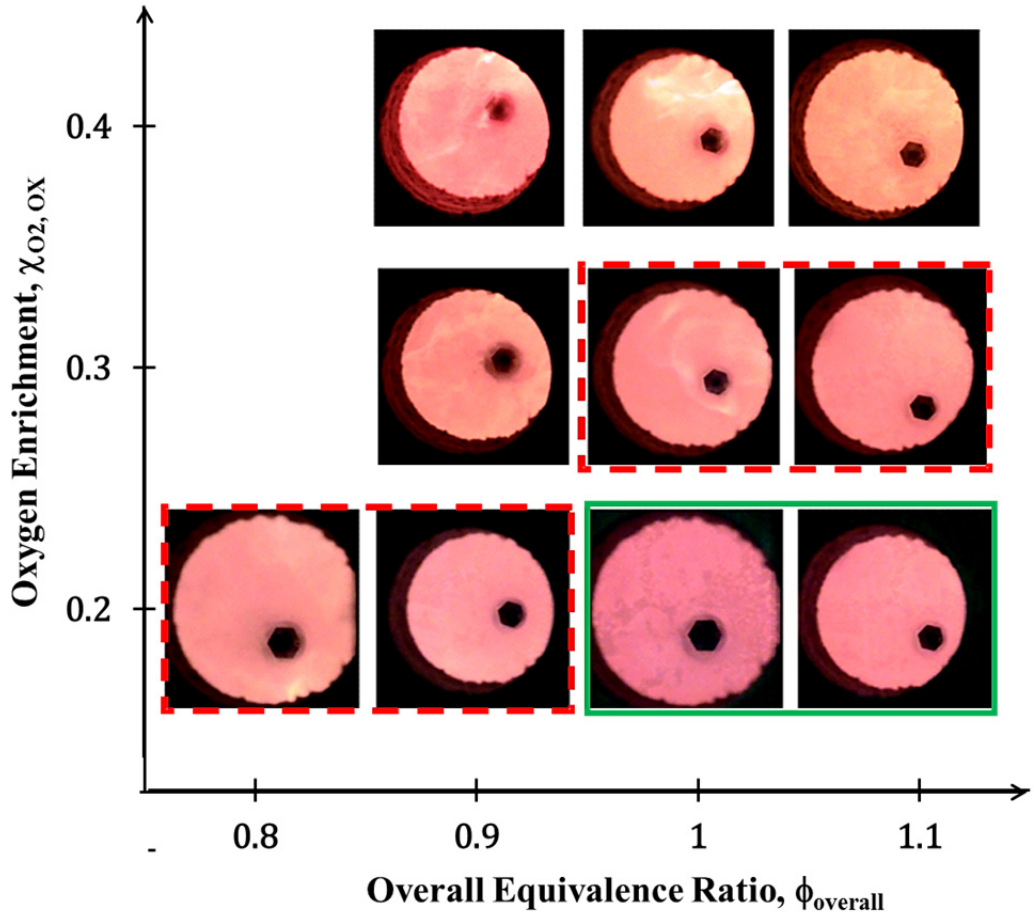

Figure 6: Images taken from the bottom of the water-cooled plate (Figure 4) for $d_{ox} = 31.8$ mm. Flameless combustion cases are boxed with solid green color and the borderline flameless cases are boxed with dotted red color. Rest of the cases were not flameless.

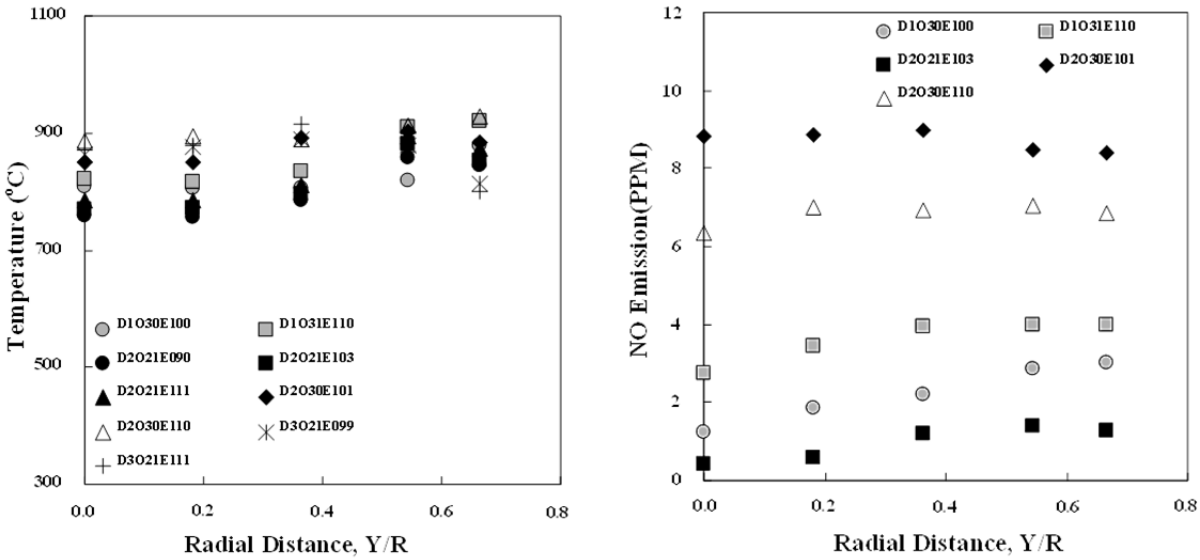

Figure 7: Measured radial Temperature and NO formation profiles for flameless combustion inside the experimental furnace at various experimental conditions. Note that the measured average temperature for these experiments is ~1150K and NO < 10 ppm.

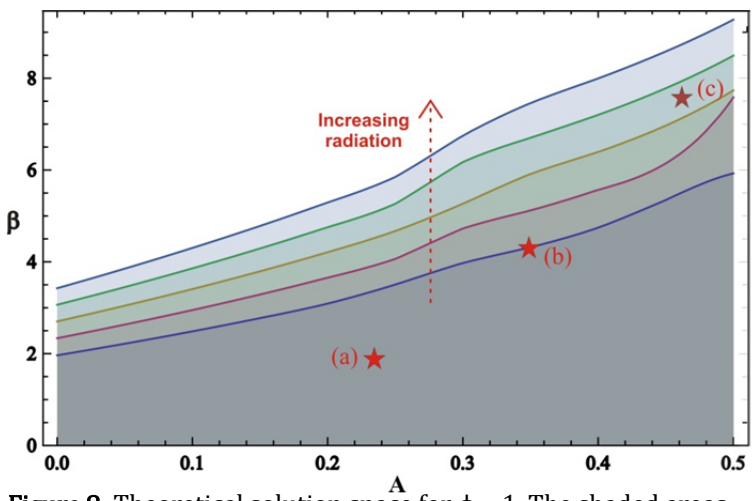

Figure 8: Theoretical solution space for ϕ =1. The shaded areas contain fully converged solutions. The star '★' data points correspond to the experimental cases shown in Figure 6. Note that by increasing radiation case (c) can also be made flameless.

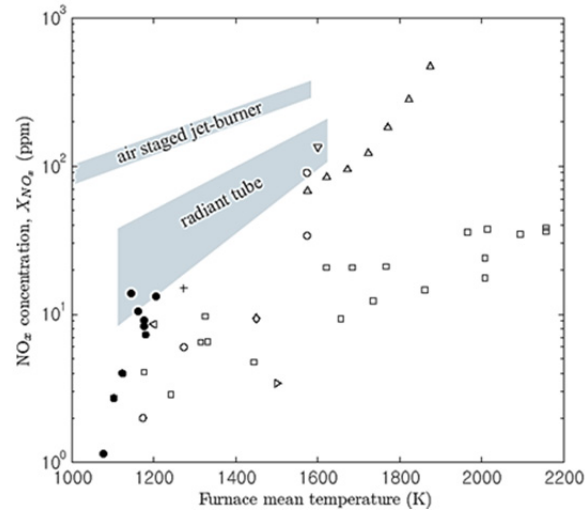

Figure 9: NOx emission data of the current work compared with previous results from literature. The current NOx data are plotted by the symbol '●'.

Figure 8 shows the comparison of our data with the models we have developed. It clearly shows that Radiative Flameless Combustion (RFC) domain expands by increasing radiation. Figure 9 shows the comparison of NOx data with the literature results. The technology developed in this work is clearly superior to the previous technologies. More details about this work are presented in the papers listed in the accomplishments section.

Summary of work planned and completed

This project planned to develop and demonstrate a transformational ultra-high efficiency and ultra-low emissions combustion technology for high-temperature furnaces to reduce the energy intensity and carbon footprint of U.S. manufacturing industries. This new combustion technology is called "Radiative Flameless Combustion (RFC)." RFC provides low pollutant formation, uniform and high radiation that increases productivity, oxygen-free atmosphere that reduces scale/dross formation, provides multi-fuel capability, and enables carbon sequestration if pure oxygen is used for combustion.

<u>Task I: RFC Furnace Research</u>: RFC was successfully developed in this work and its uniform radiation/temperature and low NOx properties were demonstrated. Representative data obtained during these experiments (Table I) is shown in Figures 6, 7, 8 and 9. A complete set of data are presented in Publications 1 to 5 and 9 listed in §6 below. There was not sufficient time to implement high radiation and multi-fuel capabilities. Although models developed (Publications 3 & 4 listed in §6 below) show that high radiation makes it easier to obtain RFC. Please note that addition of another carbon-rich fuel (fuel spray or coal dust) to natural gas will substantially increase radiation and also prove the multi-fuel capability. However, it requires modifying the apparatus and we ran out of time to do that.

In addition to the development of the RFC furnace, we also developed and tested the external Flue Gas Recirculation (FGR) technology for improving energy efficiency of existing furnaces. This generated a lot of excitement in our industrial partners. Given time we would have installed this technology in an industrial furnace. It is schematically shown in Figure 2.

<u>Task II: External FGR research</u>: We designed, instrumented and tested the external FGR system. New data was developed because it involves measuring entrainment in a confined jet. This work is presented in publications 6 and 7 listed in §6 below. Publication 6 is for entrainment in a co-flow confined jet, whereas, publication 7 is for entrainment in a counter-flow confined jet. Both are needed because depending on the industrial application, the jet flow may be co– or counter– relative to the flue gas flow. In these experiments, vertical velocity, tracer gas concentration, and temperature are measured along the axial and radial direction to determine the extent of entrainment and the dilution of the jet fluid as a function of the co-flow velocities and jet flow velocities. A schematic of the experimental apparatus developed for these measurements is shown in Figure 10. The results show that the entrainment in the confined jet deviates from the entrainment in the free jet beyond ~70 nozzle diameters downstream for co-flow and ~50 nozzle diameters downstream for counter-flow. Representative co-flow data is shown in Figure 11 (a complete set of data are presented in publications 6 and 7 listed in §6 below). By comparison of the entrainment rate in free and confined jet, it is found that the confinement effect becomes more prominent as the co-flow velocity is reduced and the jet velocity is increased. Essentially, as the entrained jet mass flow rate approaches the exhaust duct mass flow rate, the jet expands to the exhaust duct boundary. These measurements are useful for determining the diameter and the location of the collection duct from the injection nozzle. The flow and mixing characteristics obtained in these expts.

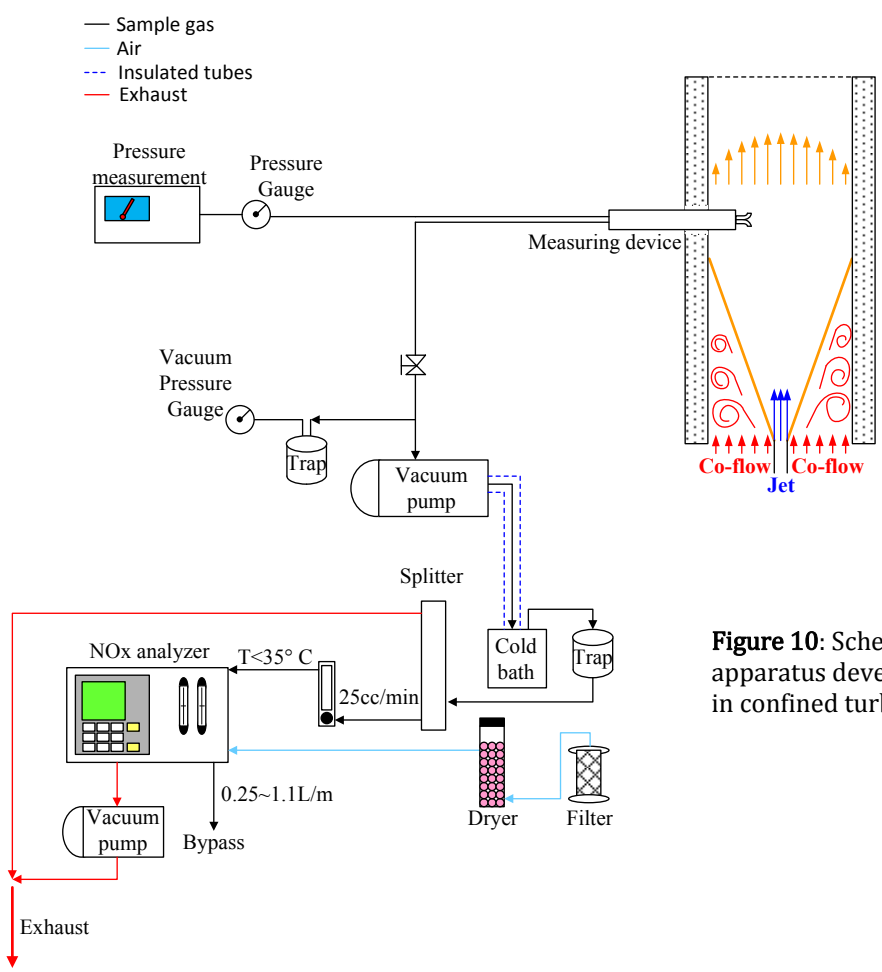

Figure 10: Schematic of the experimental apparatus developed to study entrainment in confined turbulent jets.

will help in the design of recirculating jets for industry.

4.0 Benefits Assessment

The primary benefits of the RFC technology (schematically shown in Figure 1) are: (i) significant reduction in pollutant formation due to homogeneous combustion, (ii) significant increase in productivity due to high levels of uniform radiation, (iii) increase in energy efficiency due to the use of oxygen-enriched air without NOx penalty, (iv) reduction in dross or scale formation due to oxygen free atmosphere, and (v) fuel independence – any liquid or gaseous fuel may be used. In conjunction with external FGR (Fig.2), energy savings are

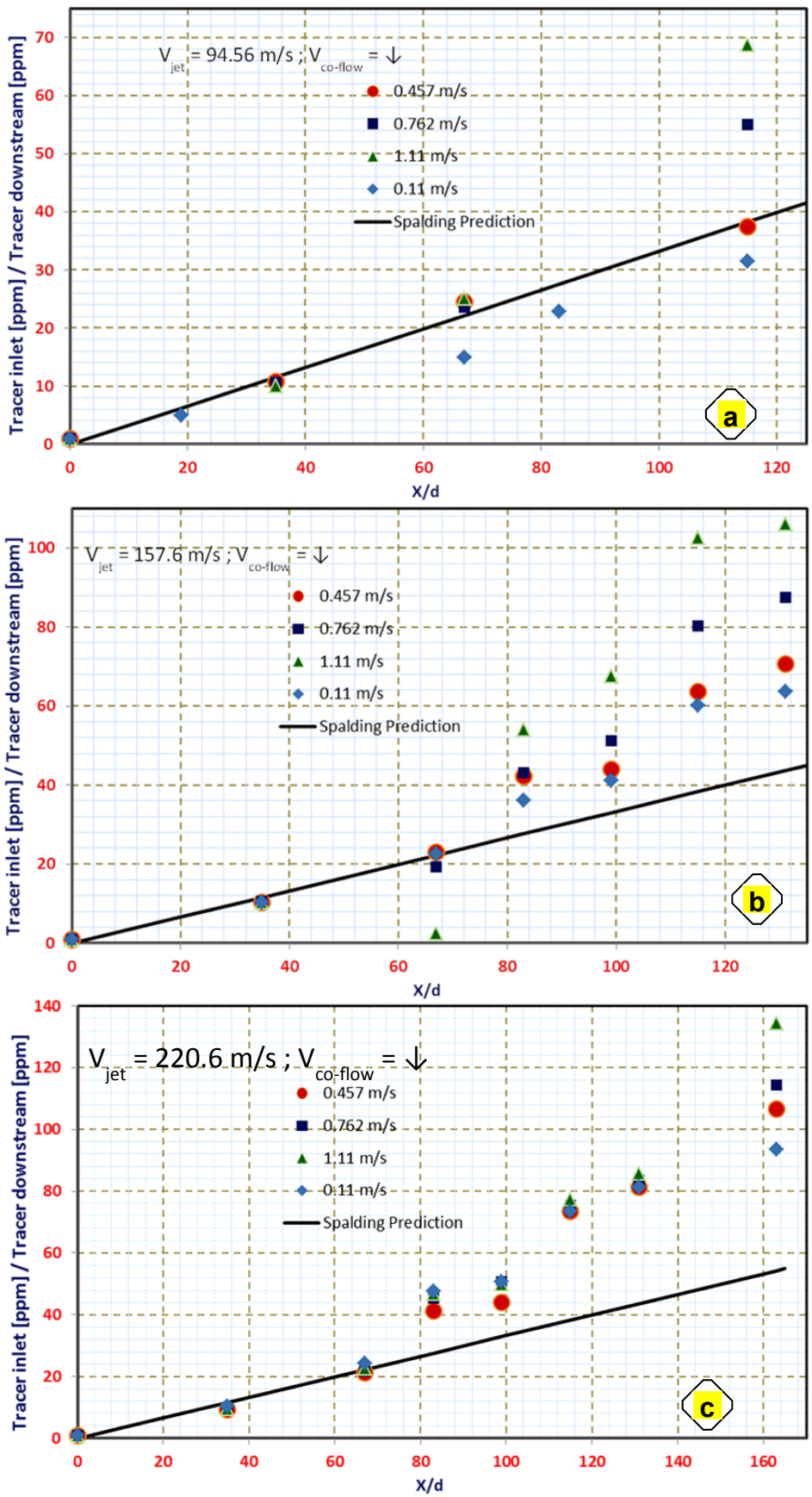

Figure 11 (a, b & c): Dilution of the jet fluid by entrainment of hot flue gas as measured by the tracer gas for a confined jet with various co-flow velocities and jet flow velocities. A comparison with Spalding's prediction for a free jet is also shown. Jet velocity: (a) → 94.56 m/s; (b) → 157.6 m/s; (c) → 220.6 m/s. Note that there is significant deviation from free jet case after $x/d \cong 70$.

considerably increased over and above those of oxygen enrichment because of simultaneous waste heat recovery. As shown in Fig. 12, for 2000°F exhaust temperature (typical of an aluminum melting furnace), 40% fuel/energy savings can be achieved by many options: (1) 21%O_2 & 1400°F air preheat; or (2) 35%O_2 & 800°F air preheat; or (3) 100%O_2 & 100°F air (i.e. no preheat). Thus for these conditions, 40% savings is the maximum that can be obtained by using 100% O_2. Similarly, 48% fuel savings can be achieved at 21%O_2 and 1800°F air preheat, which is pushing the limits of preheat possible by a regenerative system (we don't know of a system that can obtain 1800°F). However, with just 50%O_2, enough hot exhaust can be recirculated (Fig. 2) to obtain 1600°F preheat and thus 56% fuel savings. Furthermore, the system is essentially maintenance free compared to recuperators and regenerators. Typical combustion air preheats possible by a recuperator for an aluminum melting furnace with 2000°F exhaust is 800°F (actual industrial case). This results in fuel savings of about 25% from Fig. 12. Thus, 30% additional fuel or energy savings are possible by using the RFC technology in addition to the other benefits cited above and at a lower cost.

In the U.S., steel industry consumes ~1.4 Quads/yr, aluminum industry consumes ~0.5 Quads/yr, and glass industry uses ~0.3 Quads/yr of energy and metal casting ~0.4 Quads/yr. Assuming that only steel, aluminum, glass and metal casting industries adopt this technology and that it is employed in only 50% of the cases, also assuming that on the average only 20% (instead of 30%) additional savings are obtained by using the RFC technology, then the total additional energy savings would be [(1400+500+300+400)/2]×0.2=260 TBtu/year. This is a 10% (=260/2600) improvement or reduction in the current usage. The actual implemented benefits are unknown because we did not have time to install the system in industry. Also, it may take several years to contribute fully to the anticipated savings of about 260 TBtu/yr.

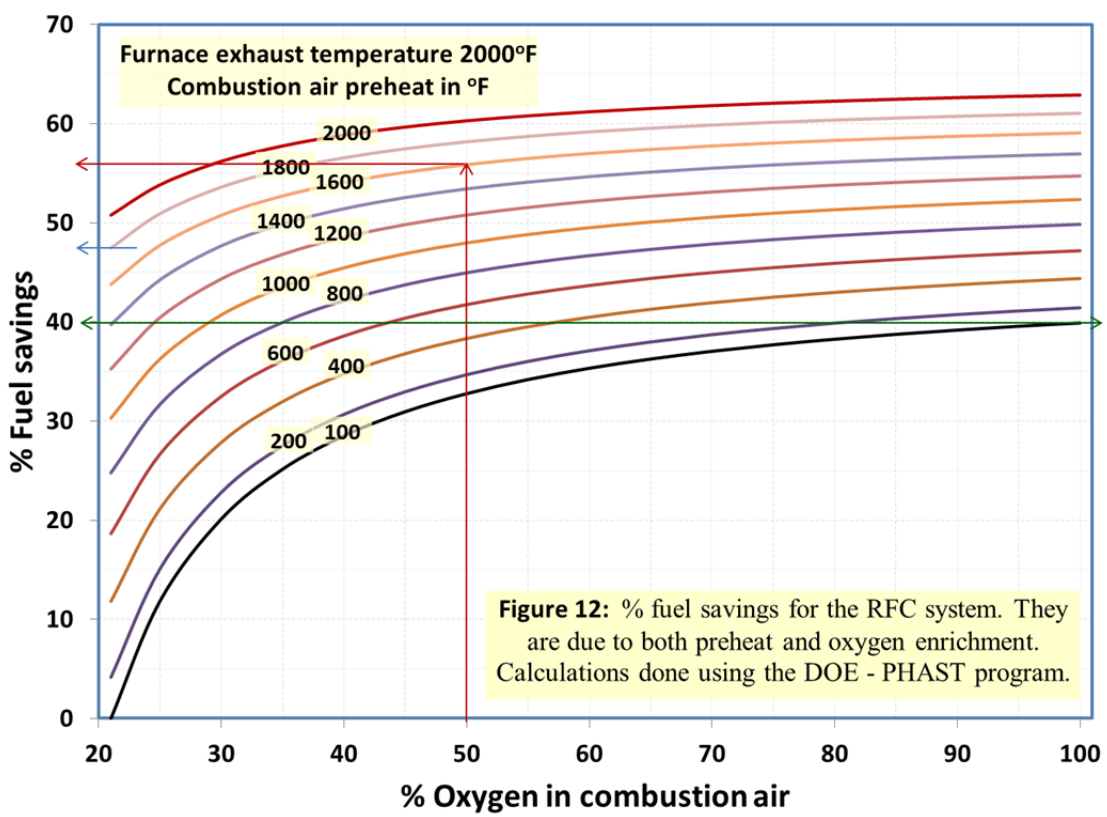

Figure 12: % fuel savings for the RFC system. They are due to both preheat and oxygen enrichment. Calculations done using the DOE - PHAST program.

5.0 Commercialization

There was not enough time to go to the commercialization stage. Although UM has extensive experience in commercializing new technologies. Several on-campus organizations assist in commercialization plans. These include the Office of Technology Transfer, the Zell-Lurie Institute within the Ross School of Business, and the center for entrepreneurship in the College of Engineering. Further, CogniTek was working for UM to commercialize the technologies developed by this project.

6.0 Accomplishments

The list of Patents and Publications developed during the course of this project are given below. These are consistent with the project objectives and goals. Shortage of time limited the accomplishments, technology transfer, and commercialization efforts.

Patents: UM filed a patent for the FGR waste heat recovery technology which has been granted. It is entitled: "Method of Waste Heat Recovery from High Temperature Furnace Exhaust Gases." U.S. Patent No. 8,317,510 -Issued: November 27, 2012.

Publications / Presentations: No new publications were generated this quarter. However, we are collecting data to publish two more papers. These are:

1. Paul D. Teini, Darshan M.A. Karwat, Arvind Atreya, "Observations of nascent soot: Molecular deposition and particle morphology," Combustion and Flame 158 (2011) 2045–2055.
2. Paul D. Teini, Darshan M.A. Karwat, Arvind Atreya, "The effect of CO2/H2O on the formation of soot particles in the homogeneous environment of a rapid compression facility," Combustion and Flame 159 (2012) 1090–1099.
3. H. R. Baum and Arvind Atreya, "Modeling Flameless Combustion in a Radiating Environment." This paper has been prepared for submission to Combustion and Flame. The manuscript is being prepared for Combustion Theory and Modeling.
4. H. R. Baum and Arvind Atreya, "Modeling Flameless Combustion in an Intensely Radiating Environment – Radiative Flameless Combustion in a Planar Momentum Jet." This paper has been prepared for submission to Combustion and Flame. The manuscript is being prepared for Combustion Theory and Modeling.
5. H. S. Lee, S. J. Shin, S. R. Emanuel, and Arvind Atreya, "Experimental Research on MILD Combustion Furnace with the Configuration of Separated Fuel and Air Jets." For submission to Combustion and Flame.
6. I. S. Lee and A. Atreya, "A study of entrainment and mixing of co-flowing gas in confined turbulent jets," For submission to Journal of Fluid Mechanics.
7. I. S. Lee and A. Atreya, "A study of entrainment and mixing of counter-flowing gas in confined turbulent jets," For submission to Journal of Fluid Mechanics.
8. Paul D. Teini, Darshan M. A. Karwat and Arvind Atreya, "Molecular realignment during soot particle maturation," For submission to Combustion and Flame.
9. Radiative Flameless Combustion for High Efficiency, Low Emissions, and Carbon Sequestration in Industrial Furnaces. Paper in preparation.
10. "Energy Efficiency & Sustainability Solutions for Industry – DOE Sponsored Program at the University of Michigan," Presentation at the Industrial Energy Efficiency Forum in Detroit on 5/24/2012.

7.0 Conclusions

The PI strongly believes that a great technology has been developed during the course of this work. This transformational new combustion technology called "Radiative Flameless Combustion (RFC)" is expected to reduce the energy intensity (or fuel consumption per unit system output) by more than 50%, double the furnace productivity while significantly reducing pollutants and greenhouse gas emissions (10^3 times reduction in NOx, 10 times reduction in CO & hydrocarbons, and 3 times reduction in CO_2). Product quality improvements are also expected due to uniform radiation, as well as, reduction in scale/dross formation is expected because of non-oxidative atmosphere. The potential markets for this proposed technology are energy intensive industries with significant process heating component such as aluminum, steel, glass, petroleum, and metal casting. While sufficient work was done to provide a solid technical basis and proof of the technology, there was not enough time to commercialize the technology.

8.0 Recommendations

We strongly recommend that DOE should enable developing high radiation furnace technology. It will have many benefits even beyond the indicated industrial use. For example, please see a recent publication on thermo-photovoltaic generators: http://dx.doi.org/10.1016/j.solmat.2013.01.031. These may exceed I.C. Engine efficiencies given an appropriate radiation source. The technology in this work can produce ~500kW/m^2, whereas, the current maximum is 300kW/m^2. Thus, I.C. Engines could be replaced by External Combustion Engines with significantly less restrictions on fuel chemistry. This enables use of domestic and carbon neutral fuels.