LBL-36658
IN-334
Published in *Proceedings of the 46th International Appliance Technical Conference* held May 15-17, 1995 at the University of Illinois at Urbana-Champaign.

Energy Efficiency Improvements for Refrigerator/Freezers Using Prototype Doors Containing Gas-Filled Panel Insulating Systems

Brent T. Griffith, Dariush Arasteh, and Daniel Türler
Lawrence Berkeley Laboratory
Energy and Environment Division
Building Technologies Program
Berkeley, CA 94720

January 1995

The research reported here was funded, in part, by the California Institute for Energy Efficiency (CIEE), a research unit of the University of California. Publication of research results does not imply CIEE endorsement of or agreement with these findings, nor that of any CIEE sponsor. This work was also supported by the Assistant Secretary for Conservation and Renewable Energy, Office of Building Technologies, Building Systems and Materials Division of the U.S. Department of Energy under Contract No. DE-AC03-76SF00098.

DISTRIBUTION OF THIS DOCUMENT IS UNLIMITED MASTER

DISCLAIMER

This report was prepared as an account of work sponsored by an agency of the United States Government. Neither the United States Government nor any agency thereof, nor any of their employees, make any warranty, express or implied, or assumes any legal liability or responsibility for the accuracy, completeness, or usefulness of any information, apparatus, product, or process disclosed, or represents that its use would not infringe privately owned rights. Reference herein to any specific commercial product, process, or service by trade name, trademark, manufacturer, or otherwise does not necessarily constitute or imply its endorsement, recommendation, or favoring by the United States Government or any agency thereof. The views and opinions of authors expressed herein do not necessarily state or reflect those of the United States Government or any agency thereof.

DISCLAIMER

Portions of this document may be illegible in electronic image products. Images are produced from the best available original document.

Energy Efficiency Improvements for Refrigerator/Freezers Using Prototype Doors Containing Gas-Filled Panel Insulating Systems

Brent Griffith, Dariush Arasteh, and Daniel Türler
Lawrence Berkeley Laboratory
Berkeley, CA 94720

ABSTRACT

Energy efficiency improvements in domestic refrigerator/freezers are directly influenced by the overall thermal performance of the cabinet and doors. An advanced system for reducing heat gain is Gas-Filled Panel thermal insulation technology. Gas-Filled Panels contain a low-conductivity, inert gas at atmospheric pressure and employ a reflective baffle to suppress radiation and convection within the gas. This paper presents energy use test results for a 1993 model 500 liter top mount refrigerator/freezer operated with its original doors and with a series of alternative prototype doors. Gas-Filled Panel technology was used in two types of prototype refrigerator/freezer doors. In one design, panels were used in composite with foam in standard metal door pans; this design yielded no measurable energy savings. In the other design, special polymer door pans were fitted with panels that fill nearly all of the available insulation volume; this design yielded a 6.5% increase in energy efficiency for the entire refrigerator/freezer. The EPA Refrigerator Analysis computer program has been used to predict the change in daily energy consumption with the alternative doors. The computer model also projects a 25% energy efficiency improvement for a refrigerator/freezer that would use Gas-Filled Panel insulation throughout the cabinet as well as the doors.

INTRODUCTION

Domestic refrigerator/freezer appliances use approximately 7% of the electricity in the United States, an amount comparable to all the energy supplied by hydroelectric generation. Government has mandated improvements in the energy efficiency of the ubiquitous refrigerator. The resulting standards place limits on the amount of energy a particular type of refrigerator can use during a standard test. These standards are being revised again for 1998 and it is expected that lower energy use will be mandated.

Manufacturers have reduced the energy usage of refrigerators by using more and better thermal insulation. Polyurethane foam insulations have been used since the 1970's and their relatively high level of thermal performance has contributed greatly to significant reductions in refrigerator energy consumption. However, since the signing of the Montreal Protocol on Substances that Deplete the Ozone

Layer, the blowing agents (such as CFC-11, a Class I ozone depleting compound) used to produce the best closed-cell appliance foams have been banned. The current replacement, HCFC-141b, is a Class II ozone depleting compound and is expected to be banned sometime in the next decade. HCFC-141b produces foam with a thermal performance comparable to CFC-11 foam, but the next generation compounds for foam manufacture that have no ozone depletion potential, may not retain similar high levels of thermal performance and alternative production systems may be required.

Advanced thermal insulation technologies are being developed which offer significant improvements over conventional foam insulations in the level of thermal resistance per unit thickness without the use of special blowing agents. These advanced insulations are systems, consisting of a device with separate components, rather than a single uniform insulation material. Typical systems use a hermetic barrier envelope surrounding a filler material and may be based on a vacuum or a low thermal conductivity gas fill.

In vacuum-based systems, gas pressure within the barrier is lowered to the point where the remaining gas molecules interact with the filler material more than with each other. In gas-based systems, the barrier envelope contains a low conductivity gas inside the filler material. Characterizing the effective thermal performance of advanced insulations is complex and requires analysis of the whole system and how it is used in a specific application.

There are two general approaches for using advanced systems in refrigerators. The first approach is to manufacture advanced insulation in modular panels which are then placed in a foam matrix, thereby keeping much of the basic appliance manufacturing process. The second approach uses the advanced technology throughout the appliance to yield advanced insulated components without the use of foam-core manufacturing. Much current literature is oriented around the first approach and gives thermal resistance values for only the center-of-panel areas of the advanced insulating panel. Furthermore, because the devices are inhomogeneous, these center panel values are not based on current standard test procedures which were developed primarily for homogeneous specimens.

As appliances become more highly insulated the effects of thermal bridging become more important. In a previous paper, results of computer modeling of the effective thermal performance of refrigerator geometeries that use advanced insulation technologies in both panel/foam composite and whole component approaches were presented [1]. In calculating the effective air-to-air thermal resistances with a finite-difference model, the 3-dimensional values were shown to be 47% to 68% of the simple 1-dimensional values for thermal resistance, where the lower percentages are for the highest performance systems. The paper also studied substituting polymer material for steel in refrigerator door pans and showed that the reduced thermal bridging through the shell material can increase

overall thermal resistance by 13% to 17.5% depending on the type of insulation in the door.

This paper discusses the potential for Gas-Filled Panel advanced insulation to improve the energy efficiency of domestic refrigerator/freezers. Assembled prototype doors were evaluated to illustrate the potential effect on improving the energy efficiency of an unchanged cabinet. Results of standardized energy consumption measurements on a 1993 model 500 liter, top mount refrigerator/freezer with three different sets of alternative doors are presented. Two of the alternate door sets are insulated with Gas-Filled Panel technology while a third alternate door set uses twice the normal thickness of polyurethane foam insulation.

GAS-FILLED PANEL ADVANCED INSULATION

Gas-Filled Panels, or GFPs, are insulating devices that contain a low-conductivity, inert gas at atmospheric pressure and employ a reflective baffle to suppress radiation and convection within the gas. Previous papers by the authors describe GFP technology in more detail [2, 3]. A polymer barrier envelope maintains a low conductivity gas such as krypton or argon. The baffle is an assembly of thin polymer films that creates a matrix of small cavities and which divides the volume of gas into compartments to reduce convection. The baffle film, coated with aluminum to provide low emittance cavity surfaces, reduces radiative heat transfer within the device. In this way, the thermal performance of a GFP approaches the thermal conductivity of the still fill gas.

This technology offers advantages over vacuum insulation technologies in refrigerator appliance applications. GFPs can be made with densities (including the barrier) comparable to or less than current appliance foams while vacuum filler materials such as precipitated silica are typically used at densities six times that of foam. Since GFPs are designed with no total pressure difference across the barrier envelope, the barrier can have complicated shapes (sharp corners and notches) that would produce problematic stress concentrations for vacuum systems. GFP technology is being developed at Lawrence Berkeley Laboratory. It is not in commercial use at the time of this writing. The technology is available for transfer to industry.

GFP Prototypes

Gas-Filled Panel designs used in prototype refrigerator doors are shown schematically in Figure 1. The prototype GFPs were fabricated by hand from

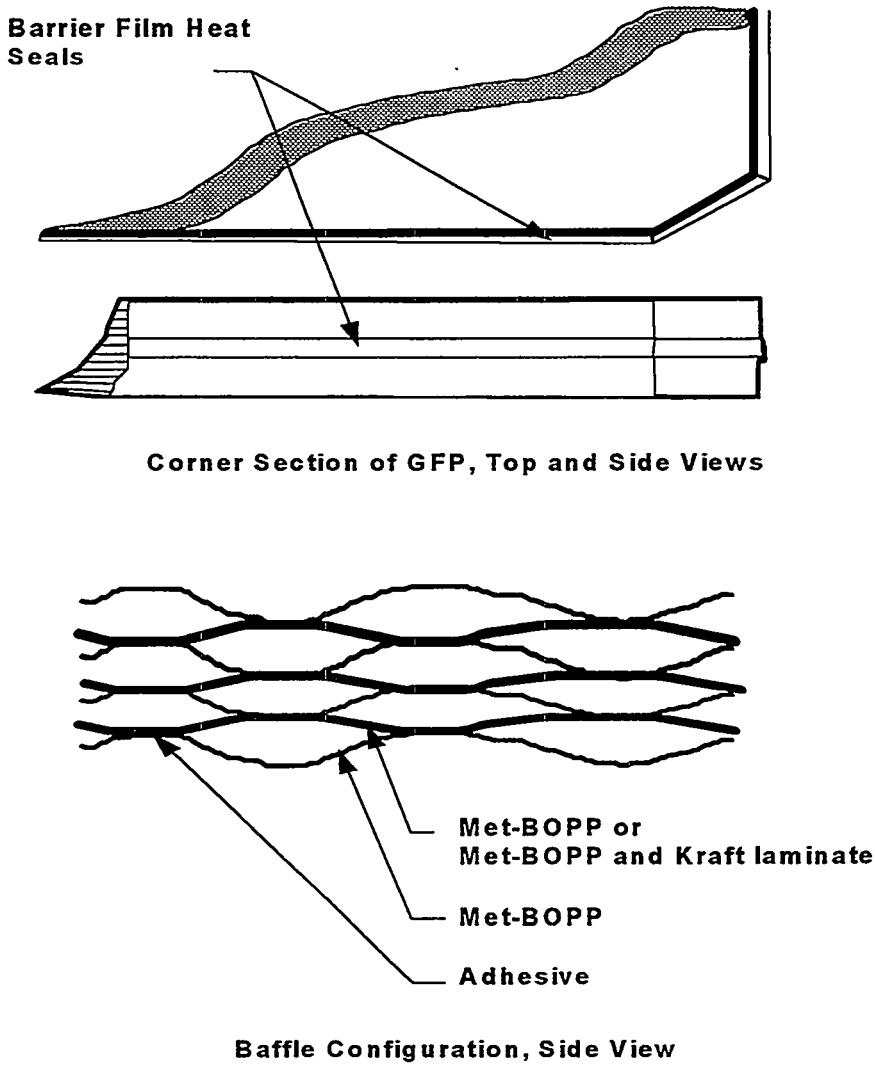

Figure 1 Schematic of Panel Barrier and Baffle for Prototype GFPs used in GFP Polymer Refrigerator Doors

commercial films using heat sealers, transfer adhesive, and a vacuum chamber for gas-filling. The prototypes use a 100 micron thick polymer barrier material that has 14 separate layers composed of nylon (for strength), ethylene vinyl acetate (EVA, for adhesion), polyethylene (for water barrier and heat seal) and ethylene vinyl alcohol copolymer (EVOH, for gas barrier). The baffle materials are metalized, oriented polypropylene (Met-BOPP) used by itself and laminated to both sides of kraft paper. The assemblies are bonded with a commercial high-tack transfer adhesive. The panels are filled with krypton by first evacuating them in a chamber and then backfilling with krypton while the chamber is simultaneously filled with air. A simple channel through the sealed barrier film serves as a valve until final sealing of the hermetic enclosure.

GFP Thermal Performance Measurements

A krypton GFP with design and construction similar to the panels used in refrigerator door prototypes was measured for apparent thermal conductivity by Oak Ridge National Laboratory using a 300 mm heat flow meter apparatus (HFMA) [4]. The results are shown in Table 1. The krypton GFP assemblies were tested at three different plate temperature settings with the intent of understanding the thermal performance of GFPs under the temperature conditions found in refrigerator/freezer energy rating tests as well as the standard temperature conditions for insulation testing. Note that the HFMA was calibrated for the standard temperature conditions (third setting) and was not specially calibrated for the first two settings which had larger temperature differences corresponding to freezer and refrigerator conditions. The square panel was 50 mm. (2 in.) thick with 300 mm. (12 in.) sides.

TABLE 1. Effective Thermal Conductivity Measurements

Heat Flow Meter Apparatus Temperature Settings	Effective Thermal Conductivity (W/m-K)	Effective Thermal Resistivity (R_{IP}-value/in.)
32.2°C and -15°C (90°F and 5°F)	0.01157	12.45
32.2°C and 7.2°C (90°F and 45°F)	0.01245	11.57
34.9°C and 12.9°C (95°F and 55°F)	0.01264	11.40

REFRIGERATOR DOOR PROTOTYPES

Two sets of doors insulated with GFPs and a third set of pseudo doors made from thick foam were assembled. The first type was a standard foam-filled metal door pan with foam partially removed to allow inserting panels under the liner; these are referred to as *GFP/foam composite doors*. The second type was a new design with polymer door pans and GFPs that fill nearly the entire insulation volume; these are referred to as *GFP polymer doors*. The final type was constructed from thick polyurethane foam board with no pan or external shell; these doors were built and tested as a reference and are referred to as *thick foam pseudo doors*. Each door set consisted of one freezer compartment door and one fresh food compartment door. Alternate doors are secured to the cabinet by the normal hinges using stock hinge ferrule inserts and use stock (production) inner liners

and gaskets to allow freezer compartment air flows and hence fresh food compartment temperature control to remain largely constant for each test.

GFP/Foam Composite Doors

GFP/Foam Composite Doors were assembled from production foam-filled sheet metal pans, the stock liner and gasket, and krypton GFPs. The foam is normal production polyurethane blown with CFC-11 (1993 model year). The freezer door pan measures 75.2 cm wide by 49.5 cm high by 5.1 cm thick; the fresh food door pan is 75.2 cm wide by 103.2 cm high by 5.1 cm thick. Figure 2 shows where foam was removed from the pan to create a sump for locating prototype GFP insulation. The freezer door uses one GFP in a sump measuring 66 cm wide by 40.3 cm high by 3 cm deep. The fresh food door uses two GFPs in a sump measuring 66 cm wide by 94 cm high by 3 cm deep. GFPs fill 43% of the volume available for insulation in the freezer door and 48% of the fresh food door. GFP coverage areas are 71% for the freezer door and 80% for the fresh food door. The panels were fabricated and gas-filled 310 days prior to testing. All layers of baffle material in these GFPs are thin metalized oriented polypropylene with no kraft paper.

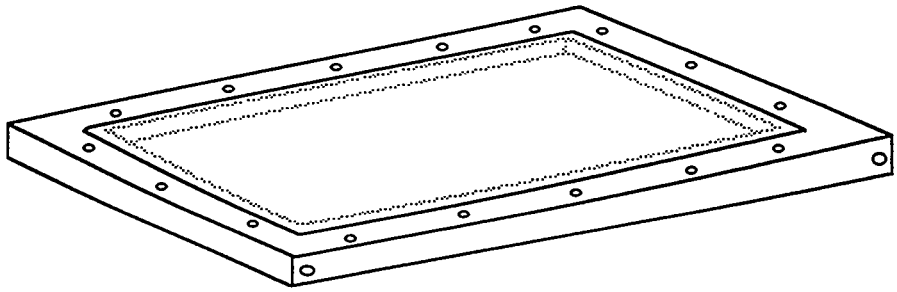

Figure 2. Foam sump in standard door pan; GFP fills sump and is held in place by the inner liner (not shown)

GFP Polymer Doors

GFP Polymer Doors were assembled from two-piece polymer pans, stock liners and gaskets, corner foam wedges, and krypton GFPs. The design is shown in Figure 3. The door pans consist of a flange frame which nests into a simple pan. This alleviates difficulties in attempting to fill an entire pan through the narrower "picture frame" opening created by the flange. The flange frame is fastened to the inner liner and gasket and the simple pan covers the whole assembly. The pan and flange frame assemblies were made by bonding extruded acrylonitrile-butadiene-styrene (ABS) sheet. The faces of the door and flange use 4.8 mm thick ABS and the sheet thickness is 2.4 mm for the sides where the shell has a double wall. The resulting door pans have the same outer dimensions as production foam-filled sheet metal pans. GFPs fill 98% of the volume available for

insulation in the freezer door and 99% of the fresh food door with the remaining volume taken up by corner foam wedges that allow hinge ferrule inserts to protrude into the insulated volume. Two GFPs are used in the freezer door, one fills the bulk of the door and another thin one fills the "picture frame" within the flange opening. Four GFPs are used in the fresh food door with two thick ones filling the pan and two thin ones filling the flange opening. The panels were fabricated and gas filled 188 days prior to testing. The baffle materials in these panels are thin metalized oriented polypropylene and a laminate of kraft and metalized polypropylene.

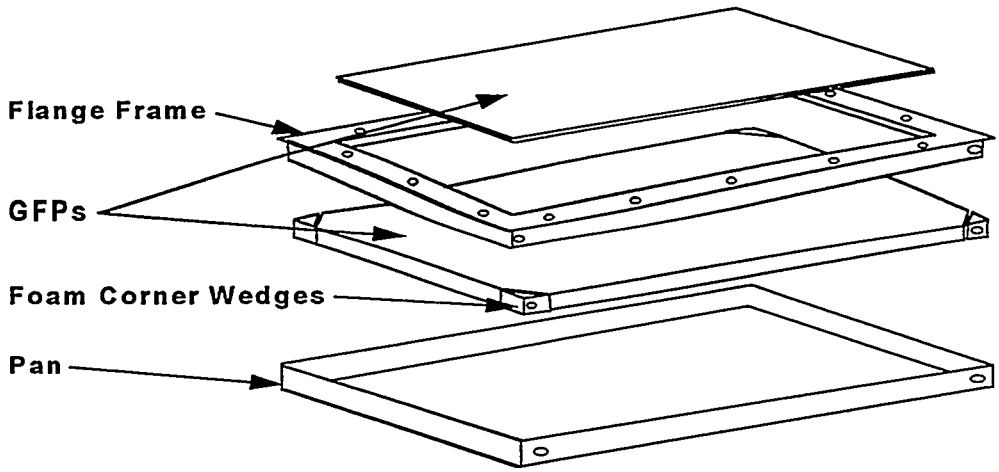

Figure 3 GFP Polymer Door Schematic, Freezer Door

Thick Foam Pseudo Doors

Thick Foam Pseudo Doors were assembled from flange frames, stock liners and gaskets, polyurethane foam boards, and extruded polystyrene foam strips. There is no pan or stiff outer shell. The ABS flange frames (as for two-piece polymer pans above) were fastened to the inner liner and gasket and then set into the 10.1 cm. thick foam board. The pseudo doors have larger areas; the freezer door is 78.7 cm wide by 50.8 cm high and the fresh food door is 78.7 cm. wide by 104.1 cm high. Additional 12 mm. thick strips of extruded polystyrene foam were installed around the perimeter covering much of gasket in all regions not affected by the hinges.

ENERGY USE MEASUREMENTS

Standardized energy measurements were conducted to evaluate the effect of alternate doors on energy efficiency. The measurements were carried out by Oak Ridge National Laboratory in accordance with the Association for Home Appliance Manufacturers (AHAM) standard test procedure used for US-Department Of

Energy rating and labeling (ANSI/AHAM HRF-1-1988). This closed-door test measures the energy used by the refrigerator in a 32.2°C (90°F) environment at four different control settings. Two temperature control settings allow testing at an average freezer compartment temperature of -15°C (5°F); each temperature control setting is tested with mullion heaters switched on and off. The final results for daily energy consumption are listed in Table 2 [5]. The baseline refrigerator is a 1993 model 500 liter (18 ft^3) top mount refrigerator/freezer with a rated performance of 1.63 kwh/day which is 13% more efficient than 1993 energy standards require.

TABLE 2. Energy Use Measurements of a 500-liter Top-Mount Refrigerator/Freezer with Alternate Door Sets

	Energy Consumption (kwh/day)	Change from Average of 2 Baseline Tests
Baseline unmodified refrigerator/freezer	1.500	-1.6%
Baseline unmodified refrigerator/freezer (retest)	1.549	1.6%
Base cabinet with GFP/foam composite doors	1.528	0.2%
Base cabinet with GFP polymer doors	1.426	-6.5%
Base cabinet with thick foam pseudo doors	1.399	-8.2%

These results confirm that increasing the thermal resistance of refrigerator/freezer doors can improve energy efficiency by some 6 to 8% depending on door type. A set of conventional doors fitted with GFPs under the liner showed no measurable improvement. The lack of measured improvement for these doors was surprising because the performance was expected to improve by about 3.5% based on similar prototypes previously evaluated by a major appliance manufacturer. The exact cause of the lack of improvement is not known at the time of this writing. While panel failure is a possibility, subsequent oxygen concentration measurements showed no degradation in gas fill for the panels used in the GFP/foam composite doors. The test environmental chamber was roughly 0.3°C (0.5°F) warmer than 32.2°C (90°F) for this particular test. Note that the baseline performance measurements varied by 3.2% and it is possible that the expected small performance improvement is not statistically resolvable by the test procedure. Regardless, the results indicate that for significantly larger improvements in energy efficiency, it is necessary to use GFPs throughout the insulated volume in a design that reduces thermal bridging.

ENERGY USE MODELING

The EPA Refrigerator Analysis (ERA) computer program [6] was used to predict the change in energy efficiency of a refrigerator/freezer that uses GFP insulation. This program models cabinet heat loads and refrigeration cycle performance to provide values for daily energy use. The model was used to analyze the effect of adding GFP insulation and new designs that reduce gasket heat leaks. Table 3 shows results for a series of modifications to a baseline 500-liter top mount refrigerator/freezer. Energy projections are for temperature conditions targeted in the AHAM test procedure (32.2°C ambient, 7.2°C fresh food, and -15°C freezer). Door openings, food loads, and mullion heating effects were not modeled.

TABLE 3. Results of EPA Refrigerator Analysis of Top-Mount Refrigerator/Freezer with Alternate Doors and GFP Insulation

		Model Input Parameters			Model Results	
	Cabinet and door configuration	GFP Coverage Area	Insulation Resistivity ($m^2 \cdot °C/W \cdot cm$)	Gasket Heat Leak ($W/m \cdot °C$)	Calculated Energy Usage (kwh/day)	Change from Baseline
1	Baseline refrigerator/ freezer	0% Doors 0% Cabinet	0.555 Doors 0.555 Cabinet	0.08	1.959	0%
2	Base cabinet with GFP/foam composite doors,	71% Freez door 80% Fresh door 0% Cabinet	0.664 Freez door 0.685 Fresh door 0.555 Cabinet	0.08	1.910	-2.5%
3	Base cabinet with GFP polymer doors	100% Doors 0% Cabinet	0.848 Doors 0.555 Cabinet	0.07	1.811	-7.6%
4	Base cabinet with thick foam pseudo doors	N/A	0.500 Door (10,1 cm thick) 0.555 Cabinet	0.065	1.736	-11.4%
5	GFP/foam cabinet with GFP/foam composite doors	71% Freez door 80% Fresh door 70% Top&sides, 50% Back	0.664 Freez door, 0.685 Fresh door 0.694 Cabinet	0.08	1.721	-12.1%
6	GFP/foam cabinet with GFP polymer doors	100% Doors 70% Top&sides, 50% Back	0.848 Doors 0.694 Cabinet	0.07	1.623	-17.2%
7	GFP cabinet with GFP polymer doors	100% Doors 100% Cabinet	0.848 Doors 0.848 Cabinet	0.07	1.469	-25%

The series 1 through 7 in Table 3 are generated by varying input data for the ERA program for insulation resistivity, gasket heat leaks, and insulation thickness. Cabinet interior volume is held constant as are outside dimensions, except for series 4 where outside dimensions are increased to model the thick foam pseudo door. The refrigeration cycle inputs are held constant; cycle component descriptions were gathered by inspection of the base model used in experimental measurements, from engineering estimates, and program defaults, rather than an intimate knowledge of system components. Series 2 differs from the baseline in that door insulation resistivity was changed from 0.555 $m^2 \cdot °C/W \cdot cm$ to 0.664 $m^2 \cdot °C/W \cdot cm$ for the freezer door and 0.685 $m^2 \cdot °C/W \cdot cm$ for the fresh food door; these values were calculated by ERA for 30 mm. thick GFPs with resistivity of 0.848 $m^2 \cdot °C/W \cdot cm$ and 71% coverage area in the freezer door and 80% coverage area in the fresh food door. Series 3 differs from the baseline in that the entire door insulation is set to a resistivity of 0.848 $m^2 \cdot °C/W \cdot cm$., door insulation thickness is reduced from 4.72 to 4.52 cm. (to account for thicker outer polymer shell) and gasket heat leak is reduced from an estimated 0.08 to 0.07 $W/m \cdot °C$ (to account for polymer flange under door gasket). Series 4 differs from the baseline in that the door insulation thickness is changed from 4.72 to 10.16 cm., insulation resistivity is changed from 0.555 to 0.500 $m^2 \cdot °C/W \cdot cm$, gasket heat leak is reduced from an estimated 0.08 to 0.065 $W/m \cdot °C$, and the overall depth of the appliance is increased from 75.25 to 80.33 cm (interior volume remains constant).

Series 5, 6, and 7 model the use of GFPs in the cabinet of the refrigerator/freezer as well as the doors. The GFP/foam cabinet used in series 5 and 6 have panels located against the outer cabinet shell with normal foam filling the remaining volume. The top, bottom, and sides of the cabinet are modeled with 30 mm. thick GFPs covering 70% of the area. The back of the cabinet is modeled with 25 mm. thick GFPs covering 50% of the area. Series 5 uses the same changes as series 2 for the GFP/foam composite doors and changes cabinet insulation resistivity as calculated by ERA for the coverage area; gasket heat leak is 0.08 $W/m \cdot °C$. Series 6 uses the same changes as series 3 for the GFP polymer doors and changes cabinet insulation resistivity as for Series 5; gasket heat leak is 0.07 $W/m \cdot °C$. Series 7 uses the same changes to the doors as series 3. The cabinet in series 7 uses insulation resistivity of 0.848 $m^2 \cdot °C/W \cdot cm$ throughout, insulation thickness is lowered by 2 mm. throughout; gasket heat leak is 0.07 $W/m \cdot °C$.

The ERA model predicted an improvement of 11.4% with the thick foam pseudo doors compared to a measured change of 8.2%. The model predicted a change of 7.6% for the GFP polymer doors compared to a measured change of 6.5%. Simulating the use of GFP technology throughout the appliance yielded total savings of some 25%. While the ERA modeling did not yield accurate predictions of total energy consumption, the trends in efficiency changes resulting from altered insulation values agreed fairly well with measurements of the GFP polymer doors. The lack of accuracy in the overall values for energy consumption might be attributed to inaccurate data for the refrigeration cycle and "gasket heat

leak" was difficult to quantify. Cabinet heat loads are very sensitive to this value with the model results indicating that gasket heat gains are 23% to 29% of the total heat load.

CONCLUSIONS

From the results of the study it can be concluded that:

1. Modifications to the door construction of a refrigerator/freezer, with no changes to the inner liner and gasket parts, can allow up to 8.2% energy savings for the model evaluated.

2. The largest improvements in energy efficiency from advanced insulation technologies, such as Gas-Filled Panels, require using new technology throughout the insulated volume of the refrigerator/freezer.

3. Gas-Filled Panel insulation, when used in designs that reduce thermal bridging, is an effective method of reducing refrigerator energy consumption; measurements show a 6.5% energy savings from the use of GFP polymer doors on a 500-liter top-mount refrigerator/freezer. Simulations predict a 25% savings from the use of this technology throughout the cabinet

ACKNOWLEDGMENTS

The research reported here was funded, in part, by the California Institute for Energy Efficiency (CIEE), a research unit of the University of California. Publication of research results does not imply CIEE endorsement of or agreement with these findings, nor that of any CIEE sponsor. This work was also supported by the Assistant Secretary for Energy Efficiency and Renewable Energy, Office of Building Technologies, Building Systems and Materials Division of the U.S. Department of Energy under Contract No. DE-AC03-76SF00098.

The authors wish to thank Van Baxter, Jim Sand, Edward Vineyard, and the staff of the Building Equipment Research Program, and Ron Graves of the Carbon and Insulation Materials Technology Group, all at Oak Ridge National Laboratory for their timely assistance with independent performance measurements. The authors also wish to thank their colleague Chad Goudey for his assistance in preparing prototypes.

REFERENCES

1. Griffith, B. T., and D. Arasteh. "Advanced Insulations for Refrigerator/Freezers: The Potential for New Shell Designs Incorporating Polymer Barrier Construction." Lawrence Berkeley Laboratory-33376. Berkeley, CA. November 1992.

2. Griffith, B. T., D. Arasteh, and S. Selkowitz. "Gas-Filled Panel High-Performance Thermal Insulation." *Insulation Materials: Testing and Applications, 2nd Volume; ASTM STP 1116*. American Society For Testing And Materials. Philadelphia, PA. 1991. Also Lawrence Berkeley Laboratory-30160. Berkeley, CA.

3. Griffith, B., D. Türler, and D. Arasteh. "Optimizing the Effective Conductivity and Cost of Gas-Filled Panel Thermal Insulations." *Proceedings of the Twenty-Second International Conference on Thermal Conductivity*. Technomic Publishing Company, Inc. Lancaster, PA. 1994. Also Lawrence Berkeley Laboratory-36134. Berkeley, CA.

4. Graves, R. Personal Communications, Carbon and Insulation Materials Technology Group. Oak Ridge National Laboratory. Oak Ridge. TN. letter dated October 24, 1994.

5. Sand, J. Personal Communications. Building Equipment Research Program. Oak Ridge National Laboratory. Oak Ridge, TN. letter dated January 11, 1995.

6. EPA Refrigerator Analysis (ERA) Program: User's Manual, Version 1.0. United States Environmental Protection Agency. EPA-430-R-93-007. June 1993. with Version 1.2 Update, November 1994.