LA-UR- 95-2612-Vol.1

Vol 1 of 3

Document No: GTA/FSAR/08593-P2

PHASE 2

Final Safety Analysis Report for the Ground Test Accelerator (GTA)

October 1994

Prepared by Los Alamos National Laboratory
Accelerator Technology (AT) Division
Los Alamos, NM 87545

Vol 1 of 3

Document No: GTA/FSAR/08593-P2

Copy 10 of 10

PHASE 2

Final Safety Analysis Report for the Ground Test Accelerator (GTA)

October 1994

DISCLAIMER

This report was prepared as an account of work sponsored by an agency of the United States Government. Neither the United States Government nor any agency thereof, nor any of their employees, makes any warranty, express or implied, or assumes any legal liability or responsibility for the accuracy, completeness, or usefulness of any information, apparatus, product, or process disclosed, or represents that its use would not infringe privately owned rights. Reference herein to any specific commercial product, process, or service by trade name, trademark, manufacturer, or otherwise does not necessarily constitute or imply its endorsement, recommendation, or favoring by the United States Government or any agency thereof. The views and opinions of authors expressed herein do not necessarily state or reflect those of the United States Government or any agency thereof.

Prepared by Los Alamos National Laboratory
Accelerator Technology (AT) Division
Los Alamos, NM 87545

MASTER

DISTRIBUTION OF THIS DOCUMENT IS UNLIMITED

DISCLAIMER

Portions of this document may be illegible in electronic image products. Images are produced from the best available original document.

VOLUME 1

1.0 INTRODUCTION....1-1
1.1 Program Description....1-1
1.2 Objectives....1-1
1.3 Classification....1-2
1.4 GTA Organization....1-2
1.5 GTA Facility....1-2
1.5.1 GTA Site and Building MPF-365....1-2
Fig. 1-1. GTA program integrated within the Laboratory....1-3
Fig. 1-2. GTA organization divided into the six sectors of the experimental system....1-4
1.5.2 Experimental System....1-5
Table I-1 GTA Experimental Configurations and their Relationship to the FSAR....1-5
Fig. 1-3. Location of GTA and other TA-53 Site structures at AT Division....1-6
1.5.3 Cryogenic-cooling Systems....1-7
1.6 Experiments and FSAR Phasing....1-7
1.7 Hazardous Materials and Waste Products....1-8
1.7.1 Cryogens....1-8
1.7.2 Laboratory Chemicals and Solvents....1-8
1.7.3 Activated Air....1-9
1.7.4 Potentially Activated Water....1-9
1.7.5 Activated Equipment....1-9

Figures and Tables

Fig. 1-1. GTA program integrated within the Laboratory....1-3
Fig. 1-2. GTA organization divided into the sectors of the experimental system....1-4
Fig. 1-3. Location of GTA and other TA-53 Site structures at AT Division....1-6

Table I-1 GTA Experimental Configurations and their Relationship to the FSAR....1-5

2.0 SUMMARY/CONCLUSION....2-1
2.1 Risks Associated with the CCS....2-1
Table II-1 Matrix of Accident Probability and Hazard Severity Evaluation....2-3
2.2 Risks from Natural Phenomena....2-4
2.3 Risks from Normal Operations....2-4
2.4 Risks from Accidents or Malfunctions....2-5
2.5 Siting....2-7
2.6 Impact on, or from, Nearby Facilities....2-8
2.7 Training....2-9
2.8 Conclusions....2-10

Figures and Tables

Fig. 2-1. TA-53 exhaust stack locations....2-11

Table II-1 Matrix of Accident Probability and Hazard Severity Evaluation....2-3

3.0 SITE DESCRIPTION AND ASSESSMENT....3-1
3.1 Geographic Setting and Land Use....3-1
3.1.1 GTA Site....3-4
3.1.1.1 Cryogenic-cooling System (CCS) Site....3-4
3.2 Geology and Seismology....3-9
3.2.1 Site-specific Geology and Seismology....3-9
3.3 Hydrology....3-12
3.3.1 Site-specific Hydrology....3-13
3.4 Climatology and Meteorology....3-13

3.4.1 Site-specific Climatology and Meteorology 3-14
3.5 Population Distribution 3-17
3.5.1 Site-specific Population 3-17
3.6 Ecological Features 3-18
3.6.1 Site-specific Ecology 3-18

Figures and Tables

Fig. 3-1. Location of Los Alamos National Laboratory. 3-2
Fig. 3-2. Location of the GTA in Los Alamos County 3-3
Fig. 3-3. Location of GTA at AT Division. 3-5
Fig. 3-4. CCS site. 3-6
Fig. 3-5. Geology of the Los Alamos, NM area. 3-10
Fig. 3-6. Earthquake hazard at Los Alamos, NM. 3-11
Fig. 3-7. Wind rose for the Mesatop Technical Area (TA-50). 3-15
Fig. 3-8. Wind hazard at Los Alamos National Laboratory. 3-16

Table III-1 1990 Population Within 80 km of Los Alamos 3-17

4.0 DESCRIPTION OF FACILITY 4-1
4.1 Site and Building MPF-365 4-1
4.1.1 Design Criteria 4-1
4.1.2 Location 4-4
4.1.3 Building MPF-365 Layout 4-4
4.1.3.1 Office/Laboratory Support Complex 4-4
4.1.3.2 High Bay Equipment Area 4-14
4.1.3.3 Beam Tunnel 4-14
4.1.3.3.1 Plug Doors 4-15
4.1.3.3.2 Hinge-hung Shield Doors 4-15
4.1.3.3.3 Truck Entrances 4-15
4.1.3.3.4 Vertical Access Chase 4-15
4.1.3.3.5 Laser Basement 4-16
4.1.3.3.6 Waveguide Basement 4-16
4.1.3.4 North Mechanical Room 4-16
4.1.3.5 40-kW Cryogenic Equipment Room 4-16
4.1.3.6 750-W Cryogenic Pump Room 4-16
4.1.4 Heating, Ventilating, and Air Conditioning (HVAC) 4-17
4.1.4.1 HVAC Control 4-17
4.1.4.2 HVAC Standards 4-17
4.1.4.3 Air Intakes 4-19
4.1.4.4 Air Exhaust 4-19
4.1.5 Fire-protection System 4-19
4.1.6 Lightning Protection 4-23
4.1.7 Building Utilities 4-23
4.1.7.1 Electrical Power Distribution 4-23
4.1.7.2 Electrical Substation Oil Containment 4-29
4.1.7.3 Grounding 4-29
4.1.7.4 Telephones 4-30
4.1.7.5 Natural Gas 4-30
4.1.7.6 Sewage 4-30
4.1.7.7 Building Services 4-30
4.1.8 Shielding 4-31
4.1.9 Environmental, Safety, and Health (ES&H) Protection Systems 4-33
4.2 Experimental Equipment 4-34
4.2.1 Ground Test Accelerator 4-34
4.2.1.1 Injector 4-34
4.2.1.2 425-MHz Radio-frequency Quadrupole 4-44
4.2.1.3 425-MHz Intertank Matching Section 4-45

4.2.1.4 850-MHz Drift-tube Linac 4-45
4.2.2 Output Optics 4-50
4.2.2.1 HEBT 4-50
4.2.2.2 Bend 4-53
4.2.2.3 Telescope 4-55
4.2.2.4 Fast Steerer 4-59
4.2.2.5 Beam Stops 4-59
4.2.2.5.1 Intermediate Beam Stop 4-59
4.2.2.5.2 Final Beam Stop 4-62
4.2.3 Neutral Beam System 4-63
4.2.3.1 WAFFOG Experimental Assembly 4-63
4.2.3.2 Pinhole Plate Station 4-63
4.2.3.3 Sweep Magnet 4-68
4.2.3.4 Detector Station 4-68
4.2.3.5 Vacuum-enclosure Vessels 4-72
4.2.3.6 Stand Alone Water-cooling System 4-72
4.2.4 Diagnostics 4-72
4.2.4.1 Experiments 1C and 2A 4-73
4.2.4.2 Experiment 2D 4-73
4.2.4.2.1 Offset Beam Line Diagnostics 4-73
4.2.4.2.2 Straight-ahead Beam Line 4-75
4.2.4.2.3 DTL Devices 4-75
4.2.4.2.4 Laser-beam Diagnostic Systems 4-75
4.2.4.3 Safety Issues 4-76
4.3 Accelerator Support Systems 4-77
4.3.1 Accelerator Controls 4-77
4.3.1.1 Control System Architecture 4-78
4.3.1.2 Computer Software 4-82
4.3.1.3 Experimental Operations 4-82
4.3.2 RF-power 4-83
4.3.2.1 Tetrode System 4-89
4.3.2.2 850-MHz RF Klystron System 4-91
4.3.3 The Accelerator/RFQ Vacuum System 4-95
4.3.4 Water-cooling Systems 4-96
4.3.4.1 Potentially Contaminated Water-cooling System 4-99
4.3.5 40-kW Cryogenic-cooling System 4-99
4.3.5.1 Project Requirements 4-107
4.3.5.2 System Performance 4-107
4.3.5.3 Design Considerations 4-108
4.3.5.4 Component Description 4-109
4.3.5.4.1 Cryogenic Piping 4-109
4.3.5.4.2 Cryogenic Valves 4-110
4.3.5.4.3 LH2 Storage Dewar 4-111
4.3.5.4.4 LH2 Run Dewar and Heat Exchangers 4-113
4.3.5.4.5 Hydrogen Vents 4-118
4.3.5.4.6 LN2 Storage Dewar 4-119
4.3.5.4.7 LN2 Run Dewar and Heat Exchanger 4-119
4.3.5.4.8 Circulation Compressor 4-123
4.3.5.4.9 Warm-up Heater 4-125
4.3.5.4.10 Helium-recovery System 4-125
4.3.5.4.11 Helium Purifier 4-128
4.3.5.4.12 Vacuum Pump 4-128
4.3.5.4.13 GTA Simulator 4-130
4.3.5.5 Cryogenic-cooling Distribution Manifold Subsystem 4-130
4.3.5.6 Instrumentation and Controls 4-130
4.3.5.7 Codes and Standards 4-133
4.4 Support Operations 4-137
4.4.1 High Power Cryogenic Test Bed (HPCTB) 4-137

4.4.2 750-W Cryogenic Refrigerator 4-139

Figures and Tables

Fig. 4-1. GTA construction and preliminary operations schedule. 4-2
Fig. 4-2. GTA at AT Division 4-5
Fig. 4-3. GTA facility 4-6
Fig. 4-4. GTA facility — first-floor plan. 4-7
Fig. 4-5. GTA facility — second-floor plan 4-8
Fig. 4-6. GTA facility — third-floor plan. 4-9
Fig. 4-7. GTA facility — fourth-floor plan. 4-10
Fig. 4-8. GTA facility — cross section. 4-11
Fig. 4-9. Cross section of the GTA facility through the vertical access chase 4-12
Fig. 4-10. Air-handling system for the beam tunnel. 4-13
Fig. 4-11. Air-intake sources. 4-20
Fig. 4-12. GTA electrical distribution diagram. 4-24
Fig. 4-13. Six sectors of the experimental system. 4-35
Fig. 4-14. GTA work breakdown structure. 4-36
Fig. 4-15. Configuration for 24 MeV 4-38
Fig. 4-16. GTA injector block diagram 4-40
Fig. 4-17. HV dome and injector. 4-41
Fig. 4-18. Plan view of the injector. 4-42
Fig. 4-19. Injector grounding plan. 4-43
Fig. 4-20. Typical RFQ accelerator section. 4-46
Fig. 4-21. Radio frequency quadrupole. 4-47
Fig. 4-22. IMS configuration. 4-48
Fig. 4-23. The 24-MeV RFQ, IMS, and DTL systems with vacuum envelopes 4-49
Fig. 4-24. DTL linac and vacuum system with diagnostic spool 4-51
Fig. 4-25. HEBT configuration. 4-52
Fig. 4-26. Bend 4-54
Fig. 4-27. Telescope. 4-57
Fig. 4-28. Collimator. 4-58
Fig. 4-29. Intermediate beam stop. 4-61
Fig. 4-30. Neutral beam. 4-64
Fig. 4-31. Characterization beam stop. 4-66
Fig. 4-32. Pinhole plates. 4-67
Fig. 4-33. Detector station. 4-69
Fig. 4-34. Neutral Beam LN2 cooling system 4-71
Fig. 4-35. Layout of diagnostic plate. 4-74
Fig. 4-36. Control room 4-79
Fig. 4-37. GTA control system interfaces. 4-80
Fig. 4-38. Approximately 40 input-output controllers distribute the I&C functions throughout the 4-81
Fig. 4-39. Ground plan of RF system components. 4-84
Fig. 4-40. Schematic of RF component requirements. 4-85
Fig. 4-41. Block diagram of the RF power. 4-88
Fig. 4-42. Block diagram of klystron system. 4-93
Fig. 4-43. Water-cooling system operational schematic. 4-97
Fig. 4-44. Intentionally Blank 4-98
Fig. 4-45. Intentionally Blank 4-100
Fig. 4-46. Stand alone portable water chiller units. 4-101
Fig. 4-47. Cooling concept selected for the GTA 4-102
Fig. 4-48. Site plan for CCS 4-104
Fig. 4-49. Piping and instrumentation diagram of the helium flow loop. 4-105
Fig. 4-50. Piping and instrumentation diagram of the CCS storage and supply. 4-106
Fig. 4-51. General arrangement of the LH2 storage dewar 4-114
Fig. 4-52. Details of the LH2 run dewar. 4-115
Fig. 4-53. General arrangement of the LH2 run dewar 4-116

Fig. 4-54. General arrangement for the LN2 run dewar....4-120
Fig. 4-55. Details of the LN2 heat exchanger....4-122
Fig. 4-56. General arrangement of the circulating compressor....4-124
Fig. 4-57. General arrangement of the helium-recovery tank....4-126
Fig. 4-58. General arrangement of the GHe recovery compressor....4-127
Fig. 4-59. Helium purifier....4-129
Fig. 4-60. Piping and instrumentation diagram of the cryogenic-cooling distribution manifold subsystem....4-131
Fig. 4-61. One-line power diagram....4-134
Fig. 4-62. Example of a pictorial computer....4-135
Fig. 4-63. Example of an operational mode on the computer....4-136
Fig. 4-64. HPCTB....4-138
Fig. 4-65. 750-W refrigerator layout....4-140
Fig. 4-66. 750-W refrigerator schematic....4-141

Table IV-1 GTA HVAC Data....4-18
Table IV-2 GTA Estimated Electrical Loads....4-26
Table IV-3 Radiation and Shielding for Experiments 2D through 3C....4-31
Table IV-4 Design Requirements for Beam Stops....4-60
Table IV-5 RF Power System Specifications....4-86
Table IV-6 RF Component Requirements....4-87
Table IV-7 Water System Parameters....4-99
Table IV-8 Process Parameters for the LH2 Run Dewar....4-113
Table IV-9 Process Parameters for the LN2 Run Dewar....4-121
Table IV-10 Circulation Compressor Specifications....4-123
Table IV-11 Summary of CCS Instrumentation....4-132

5.0 DESCRIPTION OF OPERATIONS....5-1
5.1 Organization....5-1
5.2 Sequence of Experimental Operations....5-3
5.2.1 Experiments
Phase 0 Operations....5-5
5.2.1.1 GTA Experiments 1A, 1B, and 1C....5-5
5.2.1.2 GTA Experiment 2A....5-5
5.2.2 Experiments
Phase 2 Operations....5-8
5.2.2.1 GTA Experiment 2D....5-8
5.2.2.2 Description of GTA Experiments 3A, 3B, and 3C....5-8
5.2.2.3 Phase 2 Startup....5-12
5.2.2.4 Operations Staffing for Experiments 2D, 3A, 3B, and 3C....5-12
5.3 Experimental Equipment....5-14
5.3.1 Accelerator Hazards....5-14
5.3.1.1 Injector Hazards....5-14
5.3.1.2 RFQ/IMS Hazards....5-16
5.3.1.3 DTL Hazards....5-17
5.3.1.4 Activated Air....5-18
5.3.1.5 Tunnel Radiation....5-18
5.3.2 Output Optics....5-19
5.3.2.1 HEBT....5-19
5.3.2.1.1 Experiment 3A Commissioning....5-19
5.3.2.1.2 HEBT Operation....5-21
5.3.2.2 Bend....5-22
5.3.2.2.1 Bend Commissioning....5-22
5.3.2.2.2 Bend Operation....5-24
5.3.2.3 Telescope....5-25
5.3.2.3.1 Telescope Commissioning....5-25

5.3.2.3.2 Telescope Operation 5-27
5.3.2.4 Fast Steerer 5-27
5.3.2.4.1 Fast Steerer Commissioning 5-27
5.3.2.4.2 Fast Steerer Operation 5-28
5.3.3 Neutral Beam Hazards 5-29
5.3.3.1 Beam Heating 5-29
5.3.3.2 Direct and Indirect Ionizing Radiation Consideration 5-29
5.3.3.3 Nitrogen Release into the Vacuum 5-30
5.3.4 Experimental Diagnostics Hazards 5-33
5.4.1 Accelerator Controls 5-35
5.4.2 RF Power (Hazards) 5-36
5.4.2.1 Electric Shock 5-36
5.4.2.1.1 Klystron System 5-36
5.4.2.1.2 Tetrode System 5-38
5.4.2.2 Oil Spill 5-38
5.4.2.3 High Bay RF Amplifier Radiation 5-40
5.4.3 Accelerator Vacuum Hazard 5-41
5.4.4 Potentially Contaminated Water-cooling System 5-41
5.4.5 CCS 5-41
5.4.5.1 40-kW CCS Operation 5-41
5.4.5.1.1 Pressurization with GHe 5-42
5.4.5.1.2 Purification 5-43
5.4.5.1.3 Cool Down and Standby at 80 K 5-43
5.4.5.1.4 Cool Down and Standby at 22 K 5-44
5.4.5.1.5 Run 5-44
5.4.5.1.6 Warm-up 5-45
5.4.5.1.7 Depressurization 5-45
5.4.5.1.8 Purge and Fill of the LH2 System 5-45
5.4.5.1.9 CCS Readiness Tests 5-46
5.4.5.2 Chemical and Mechanical Processes for the CCS 5-48
5.4.5.3 CCS Control and Monitoring System 5-49
5.4.5.4 Hazardous Materials Handling 5-51
5.4.5.5 Control Operations Method 5-51
5.4.5.6 Safety-Related Monitoring and Control Systems 5-53
5.4.5.7 Operational Reliability and Maintenance 5-55
5.4.5.8 Operations or Shut Down Under Accidental or Abnormal Conditions 5-55
5.5 Types and Quantities of Hazardous Materials Used 5-57
5.5.1 Hazardous Materials used for the 40-kW CCS 5-57
5.5.2 Liquid Nitrogen 5-59
5.5.3 Gaseous and Liquid Hydrogen 5-59
5.5.4 Solvents 5-61
5.5.5 Compressed Gases 5-61
5.5.6 Chemicals in Laboratories and Shops 5-61
5.5.7 Cesium Chromate 5-62
5.5.8 Lead Shielding 5-62
5.5.9 Oils 5-62
5.5.10 Water Treatment Chemicals 5-63
5.6 Receiving, Storing, Handling, and Transferring Hazardous Materials 5-63
5.6.1 Liquid Nitrogen 5-63
5.6.2 Hydrogen 5-63
5.6.3 Compressed Gases
Helium, Argon, Sulfur Hexafluoride, and Nitrogen 5-64
5.6.4 Solvents 5-64
5.6.5 Chemicals 5-64
5.6.6 Cesium Chromate 5-65
5.6.7 Lead Shielding 5-65
5.7 Component Activation 5-65
5.8 Control Room and Associated Monitoring and Control Systems 5-65

5.8.1 All Accelerator Subsystems—Status and Control 5-67
5.8.2 High-voltage Interlocks 5-71
5.8.3 Radiation Protection Safety System 5-71
5.8.4 Run Permit 5-71
5.8.5 Fast Protect 5-73
5.8.6 Cryogenic Cooling System (CCS) 5-76
5.8.7 Control-room Operations 5-77
5.8.8 CCS Fire Alarm 5-77
5.8.9 Stack Vent Status 5-77
5.8.10 Surveillance TV Monitors 5-78
5.8.11 Hydrogen Monitors 5-78
5.8.12 Oxygen Monitors 5-78
5.8.13 Voice Paging 5-78
5.8.14 CCS Deluge Pull Boxes 5-78
5.9 Support Operations 5-78
5.9.1 High-power RF Testing and/or Conditioning of GTA Structures in the HPCTB 5-79
5.10 Operational Reliability and Maintenance 5-79
5.11 Safety-related Operations and Control Systems 5-81
5.11.1 RPSS 5-81
5.11.2 Electrical Interlocks 5-81
5.11.3 Laser Interlocks 5-82
5.11.4 CCS Operations 5-82
5.11.5 Fast Protect 5-82
5.11.6 Run Permit 5-82
5.11.7 Oxygen Monitors 5-82
5.11.8 Hydrogen Monitors 5-82
5.11.9 TV Surveillance 5-83
5.11.10 Tunnel Ventilation Monitors 5-83
5.11.11 Vacuum Interlocks 5-83
5.11.12 Gas Sampling 5-83
5.12 Safe Shut-down under Accident or Abnormal Operations 5-83

Figures and Tables

Fig. 5-1. Organization for GTA operations 5-2
Fig. 5-2. GTA experiments 1A, 1B, and 1C. 5-6
Fig. 5-3. GTA Experiment 2A 5-7
Fig. 5-4. GTA Experiment 2D 5-9
Fig. 5-5. Experiment 3A. 5-11
Fig. 5-6. Experiment 3C. 5-13
Fig. 5-7. Experiment 3B 5-23
Fig. 5-8. Experiment 3B installation 5-26
Fig. 5-9. Radiation dose vs. cooling time. 5-31
Fig. 5-10. Neutral Beam LN2 cooling system 5-32
5.4 Accelerator Support Systems 5-35
Fig. 5-11. Block diagram of klystron modulator safety interlock system. 5-37
Fig. 5-12. Block diagram of tetrode safety interlock system. 5-39
Fig. 5-13. Hazardous material storage 5-60
Fig. 5-14. Control room-second floor 5-66
Fig. 5-15. Console group one 5-68
Fig. 5-16. Console group two. 5-69
Fig. 5-17. Console group three. 5-70
Fig. 5-18. Run permit logic. 5-72
Fig. 5-19. Run permit switch and status panel. 5-74
Fig. 5-20. Fast protect implementation. 5-75
Fig. 5-21. HPCTB. 5-80

Table V-1 Experimental Objectives 5-3

Table V-2 Experimental Components....5-4
Table V-3 Hazardous Materials Used in MPF-365....5-58
Table V-4 Hazardous Materials Used in the Operation of the CCS....5-59
Table V-5 Summary of Operations and Systems to Maintain Safe Control of GTA....5-81

VOLUME 2

6.0 FAILURE MODES AND EFFECTS ANALYSIS....6-1
6.1 Experimental Equipment....6-1
6.1.1 Ground Test Accelerator....6-1
6.1.1.1 Injector....6-1
6.1.1.2 RFQ, DTL, and IMS....6-2
6.1.2 Optics....6-2
6.1.3 Primary Beam Stops....6-2
6.1.4 Neutral Beam....6-9
6.1.5 Diagnostics....6-9
6.2 Accelerator Support Systems....6-9
6.2.1 RF Power Systems....6-9
6.2.2 Accelerator Vacuum System....6-16
6.2.3 Water-cooling System....6-16
6.2.4 Cryogenic-cooling System....6-21
6.2.5 Cryogenic Cooling Distribution Manifold Subsystem....6-63
6.3 Support Operations/Off-line Test Equipment....6-71
6.3.1 HPCTB....6-71
6.3.2 750-W Refrigerator....6-71
6.4 GTA Safety Systems and Other Systems....6-72
6.4.1 Shielding....6-72
6.4.2 Radiation Personnel Safety System....6-73
6.4.3 Run-permit System....6-80
6.4.4 Fast-Protect System....6-80
6.4.5 Computer Control Network....6-80
6.4.6 Input-Output Controllers....6-80
6.4.7 Operator Interface Consoles....6-84
6.4.8 Fire Protection Systems....6-84
6.4.9 Beam-tunnel Ventilation System....6-84
6.4.10 Electrical Power to Component Systems....6-84
6.4.11 Telephone/Paging System....6-90
6.4.12 Cranes/Forklifts....6-90
6.4.13 Oxygen Monitors....6-90
6.4.14 Hydrogen Monitoring System....6-90

Figures and Tables

Fig. 6-1. Optics....6-8
Fig. 6-2. 24-MeV intermediate beam-stop instrumentation drawing....6-10
Fig. 6-3. Schematic of final beam stop....6-13
Fig. 6-4. RPSS....6-79
Fig. 6-4. RPSS....6-79
Fig. 6-5. Oxygen monitor....6-99

Table VI-1 First Descriptor for the Effects Category of the FMEAs....6-1
Table VI-2 Second Descriptor for the Effects Category of the FMEAs....6-1
Table VI-3 FMEAs for the Injector....6-3
Table VI-4 FMEAs for RFQ/IMS....6-5
Table VI-5 FMEAs for DTL....6-6
Table VI-6 FMEAs for Output Optics....6-7
Table VI-7 FMEAs for Intermediate Beam Stops....6-11

Table VI-8 FMEAs for Final Beam Stops 6-12
Table VI-9 FMEA for Neutral Beam 6-14
Table VI-10 FMEAs for Electromagnets Requiring Cooling 6-14
Table VI-11 FMEAs for LINDA Laser 6-15
Table VI-12 FMEAs for the High-voltage Power Supply 6-17
Table VI-13 FMEAs for the RF High-voltage Power System Capacitor Bank 6-18
Table VI-14 FMEAs for RF System 850-MHz Tetrode 6-19
Table VI-15 FMEAs for 850-MHz Klystron Modulator 6-19
Table VI-16 FMEAs for RF System 425 MHz Tetrode 6-20
Table VI-17 FMEAs for RF System Radiation Monitoring 6-20
Table VI-18 FMEAs for GTA Water-cooling System 6-22
Table VI-19 FMEAs for LH2 Subsystem of the CCS 6-25
Table VI-20 FMEAs for LN2 Subsystem of the CCS 6-35
Table VI-21 FMEAs for the He Subsystem of the CCS 6-42
Table VI-22 FMEAs for the He Distribution Manifold Subsystems of the CCS 6-64
Table VI-23 FMEAs for Tunnel Shielding Envelope 6-74
Table VI-24 FMEAs for Radiation Personnel Safety System 6-75
Table VI-25 FMEA for RPSS-Injector Interface 6-77
Table VI-26 FMEA for RPSS-RF Power Interface 6-77
Table VI-27 FMEAs for RPSS Electrical 6-77
Table VI-28 Intentionally Blank 6-78
Table VI-29 FMEAs for the Run-permit System 6-81
Table VI-30 FMEAs for Fast Protect System 6-83
Table VI-31 FMEAs for Computer Control Network 6-83
Table VI-32 FMEAs for Beam Line Input-output Controllers 6-85
Table VI-33 FMEAs for Operator Interface Console 6-85
Table VI-34 FMEAs for Fire Protection 6-86
Table VI-35 FMEAs for Water Deluge System for LH2 Run and Storage Dewars 6-88
Table VI-36 FMEAs for Beam Tunnel Ventilation System 6-89
Table VI-37 FMEAs for Electrical Power to Component Systems 6-91
Table VI-38 FMEAs for Telephone/Paging System 6-97
Table VI-39 FMEAs for Crane and Forklifts 6-98
Table VI-40 FMEAs for Oxygen Monitors 6-100
Table VI-41 FMEAs for Hydrogen Detectors 6-102

7.0 ACCIDENT ANALYSIS 7-1
7.1 Potential Hazards and Their Mitigation 7-1
7.2 Accident Analysis for the Experimental Equipment 7-1
7.2.1 Ground Test Accelerator 7-1
7.2.1.1 Injector Accidents 7-1
7.2.1.1.1 Capacitor Bank Accident 7-1
7.2.1.1.2 Hydrogen Fire 7-6
7.2.1.1.3 Cesium Exposure 7-16
7.2.1.2 RFQ/IMS/DTL Accidents 7-176
7.2.1.2.1 RF Power Leakage 7-16
7.2.1.2.2 X-ray Radiation 7-17
7.2.1.2.3 GHe Leakage 7-17
7.2.3 Output Optics Accidents 7-17
7.2.3.1 RF Power Leakage and X Radiation 7-17
7.2.3.2 Electrical Accidents 7-18
7.2.3.3 Radiation Accidents 7-19
7.2.3.4 Vacuum Loss 7-19
7.2.4 Neutral Beam Accidents 7-20
7.2.4.1 Water-cooling Systems Accidents 7-20
7.2.4.1.1 Mechanical Failure of Equipment 7-20
7.2.4.1.2 Electrical Failure of Equipment 7-20

7.2.4.1.3 Major Water Spill or Leak 7-20
7.2.4.2 Ionizing Radiation Accidents 7-21
7.2.4.3 Cryogens 7-21
7.2.5 Diagnostics 7-21
7.2.5.1 Chemical and Laser Hazards 7-21
7.2.5.2 Offset Beam Line Electromagnet Interlock Failure 7-21
7.2.5.3 Offset Beam Line Electromagnet Warning Light Failure 7-22
7.2.5.4 Electrical Shock 7-22
7.2.5.5 High Magnetic Fields 7-22
7.3 Accident Analysis for Accelerator Support Systems 7-23
7.3.1 Accelerator Control Accidents 7-23
7.3.2 RF Accidents 7-23
7.3.2.1 High-voltage Accident 7-23
7.3.2.2 X-ray and RF Radiation Accident 7-24
7.3.2.3 Oil Leak Accident 7-25
7.3.3 Vacuum 7-25
7.3.4 Water Cooling System Accidents 7-26
7.3.4.1 Mechanical Failure of Equipment 7-26
7.3.4.2 Electrical Failure of Equipment 7-26
7.3.4.3 Major Water Spill or Leak 7-27
7.3.5 Postulated Accidents for the CCS 7-27
7.3.5.1 Hydrogen Fire or Internal Combustion 7-29
7.3.5.1.1 LH2 Transfer Line Break 7-30
7.3.5.1.2 LH2 Fill Line Break 7-31
7.3.5.1.3 Massive Rupture of the LH2 Storage or Run Dewar 7-32
7.3.5.1.4 Rupture of the LH2 Storage or Run Dewar by a Small Projectile 7-32
7.3.5.1.5 Projectile Penetrates Vacuum Vessel but not Liquid Vessel 7-33
7.3.5.1.6 Projectile Penetrates the Vacuum and Liquid Vessels 7-34
7.3.5.1.7 Combustion Inside the LH2 Storage or Run Dewar 7-35
7.3.5.2 Hydrogen Release to the Atmosphere 7-35
7.3.5.2.1 Overflow of LH2 During Transfer to Run Dewar 7-36
7.3.5.2.2 Break in the GHe Circulation Line at the GHe/LH2 Heat Exchanger 7-36
7.3.5.2.3 Disconnection of Fill Line During LH2 Fill Process 7-37
7.3.5.3 Asphyxiation and Frostbite 7-38
7.3.5.3.1 GHe Circulation Line Break in the Beam Tunnel 7-39
7.3.5.3.2 GHe Circulation Line or LN2 Supply Line Break in the Equipment Room 7-40
7.3.5.3.3 GHe Circulation Line Break 7-40
7.3.5.3.4 LN2 Supply Line Break 7-41
7.3.5.4 Stored-energy Release 7-41
7.3.5.5 Conclusions from Analyses of CCS 7-42
7.4 Accident Analysis for Accelerator Support Operations 7-43
7.4.1 Personnel Exposed to Radiation from High Power DTL Testing in HPCTB Tank 7-43
7.4.2 750-W Helium Refrigerator Accidents 7-43
7.4.2.1 Electrical Accident 7-44
7.4.2.2 Mechanical Accident 7-44
7.4.2.3 Pneumatic Accident 7-44
7.4.2.4 Thermal Accident 7-44
7.4.3 High-pressure Gases 7-45
7.4.4 Cryogens in MPF-365 7-45
7.4.5 Asphyxiation 7-45
7.5 Accidents from Safety System Malfunctioning 7-46
7.5.1 RPSS Accidents 7-46
7.5.1.1 Person Left Inside Exclusion Area 7-47
7.5.1.2 Person Enters Exclusion Area While Accelerator is Operating 7-47
7.5.2 Accelerator Protection Systems Accidents 7-47

7.5.2.1 Run-permit System Malfunction 7-48
7.5.2.2 Fast-protect System Malfunction 7-48
7.6 Electrical Power 7-48
7.7 Industrial Accidents 7-50
7.7.1 Crane or Forklift Operation Accidents 7-50
7.7.2 Occupational Injury Accidents 7-50
7.8 Fire Accidents 7-51
7.9 Chemical Spill 7-51
7.10 Accidents Associated with Natural Phenomena 7-51
7.10.1 Flood 7-51
7.10.2 Earthquake 7-52
7.10.3 High Winds 7-52
7.10.4 Lightning 7-52

Tables

Table VII-1 Potential Hazards and Their Mitigation 7-2
Table VII-2 Qualitative Accident Hazard Severity 7-5
Table VII-3 Qualitative Accident Probabilities 7-6
Table VII-4 Summary of Accidents 7-7
Table VII-5 Summary of Risk Resulting from Postlated Accidents 7-12

8.0 OPERATIONAL SAFETY REQUIREMENTS 8-1
8.1 Introduction 8-1
8.1.1 Facility 8-2
8.1.2 Experimental System 8-2
8.1.3 Cryogenic-cooling System 8-2
8.2 Safety Limits 8-3
8.2.1 Radioactive Emissions 8-4
8.2.2 CCS Hazardous Materials 8-4
8.3 Limiting Conditions for Operation 8-4
8.3.1 Radiation Personnel Safety System (RPSS) 8-4
8.3.2 Tunnel Ventilation System 8-5
8.3.3 High Efficiency Particulate Air (HEPA) Filters 8-5
8.3.4 Moveable Shielding 8-6
8.3.5 Oxygen Monitors 8-6
8.3.6 Hydrogen Detectors 8-7
8.3.7 LH2 Run Dewar Vent Stack Flare 8-8
8.4 Design Features 8-8
8.5 Administrative Controls 8-9
8.5.1 Procedures 8-9
8.5.2 Training 8-9

Tables

Table VIII-1 GTA Experimental Configurations and Their Relationship to the FSAR 8-3

9.0 QUALITY ASSURANCE PROGRAM 9-1
9.1 Site and Building MPF-365 9-1
9.1.1 Organization 9-1
9.1.2 Summary of QA Program Plan 9-1
9.1.3 QA Records 9-3
9.1.4 Engineering QA Audits 9-3
9.1.5 Administrative Procedures 9-3
9.2 GTA 9-3
9.2.1 Organization 9-3

9.2.2 QA Summary 9-5
9.2.3 QA Records 9-6
9.2.4 QA Audits 9-6
9.2.5 Preoperational Testing and Retesting 9-7
9.2.6 Administrative Procedures 9-7
9.2.7 Configuration Management 9-7
9.3 CCS 9-7
9.3.1 QA Organization 9-8
9.3.2 Summary of QA Program Plan 9-8
9.3.3 QA Records 9-8
9.3.4 QA Audits 9-8
9.3.5 Preoperational Testing 9-19
9.3.6 Administrative Procedures 9-19

Figures

Fig. 9-1. GTA organization showing QA office. 9-5
Fig. 9-2. Table of contents for the CVI QA manual. 9-10
Fig. 9-3. Responsibilities of the QA manager 9-11
Fig. 9-4. QA records. 9-15
Fig. 9-5. QA audits. 9-18

10.0 ES&H MANAGEMENT PROGRAM 10-1
10.1 Organizational Structure 10-1
10.2 GTA Safety Plan 10-1
10.3 As Low as Reasonably Achievable Program 10-1
10.4 Safety Analysis Program 10-1
10.5 Operational Readiness Reviews 10-2
10.6 Administration and Records 10-2
10.7 ES&H Programs 10-2
10.8 GTA Responsibilities 10-4
10.8.1 Division Leader 10-4
10.8.2 Program Manager 10-4
10.8.3 Division Safety Officer 10-4
10.8.4 Supervisors 10-4
10.8.5 Employees 10-5
10.9 Plant Security 10-5
10.9.1 Hazards and Security 10-7

Figures

Fig. 10-1. GTA organization showing safety office 10-3
Fig. 10-2. Fenced perimeter of the secure GTA area at AT Division 10-6

11.0 ENVIRONMENTAL, SAFETY, AND HEALTH SYSTEMS CRITICAL TO SAFETY 11-1
11.1 Radiation Personnel Safety System 11-1
11.2 Shielding 11-4
11.3 Interlock Systems 11-4
11.3.1 Injector and RF Power-system Interlock Chain 11-5
11.4 Fire Detection and Suppression Systems 11-8
11.5 Oxygen Monitors 11-8
11.6 Radiation Monitoring 11-8
11.6.1 Neutron Monitoring 11-8
11.6.2 Air Activation Monitoring 11-9
11.7 Hydrogen Monitors 11-10

11.8 Heating, Ventilation, and Air Conditioning 11-11
11.9 Cryogenic-cooling System (CCS) 11-11
11.9.1 Hydrogen System 11-11
11.9.2 Helium System 11-14

Figures and Tables

Fig. 11-1. Tetrode. 11-6
Fig. 11-2. Klystron modulator 11-7
Table XI-2 CCS Pressure Summary 11-12
11.9.2 Helium System 11-14

12.0 SUMMARY OF WASTE-MANAGEMENT PROGRAM 12-1
12.1 Low-level Radioactive Waste 12-1
12.2 Radioactive-liquid Waste 12-2
12.3 Hazardous-chemical Waste 12-3
12.4 Nonhazardous Wastes 12-3

13.0 ENVIRONMENTAL MONITORING PROGRAM 13-1
13.1 Objectives and Criteria 13-1
13.2 Guards Against Accumulating Radioactive and Hazardous Materials 13-1
13.3 Potential Exposure Pathways 13-2
13.4 Air Monitoring 13-2
13.4.1 TA-53 Network 13-2
13.4.2 Analyses 13-4
13.4.3 Radioactive Airborne Emissions 13-4
13.4.4 Nonradioactive Airborne Chemicals 13-7
13.4.4.1 Acid Precipitation 13-7
13.4.4.2 Ambient Air Monitoring 13-7
13.4.4.3 Toxic Air Pollutant Sampling Program 13-7
13.5 Meteorological Modeling, Dispersion, and Annual Wind Rose 13-7
13.5.1 TA-53 Network 13-8
13.6 Water Monitoring 13-8
13.6.1 TA-53 13-8
13.6.2 Analyses 13-8
13.7 Soil and Sediment Sampling 13-11
13.7.1 Analyses 13-11
13.8 Foodstuffs Monitoring 13-14
13.8.1 Analyses 13-14
13.9 Monitoring External Penetrating Radiation 13-14
13.9.1 TA-53 Network 13-17
13.9.2 Analyses 13-17
13.10 Off-site Dose Assessment Methodology 13-17

Figures and Tables

Fig. 13-1. Air-sampling locations on or near the Laboratory site 13-3
Fig. 13-2. Summary of tritium releases. 13-5
Fig. 13-3. Summary of plutonium releases. 13-5
Fig. 13-4. Airborne activation product emissions. 13-6
Fig. 13-5. Regional surface-water, sediment, and soil sampling locations 13-9
Fig. 13-6. Surface and ground-water sampling locations on, and near, the Laboratory site 13-10
Fig. 13-7. Soil sampling on, and near, the Laboratory site 13-12
Fig. 13-8. Sediment sampling locations on, and near, the Laboratory site. 13-13
Fig. 13-9. Fish and produce sampling locations. 13-15
Fig. 13-10. Locations of beehives. 13-16
Fig. 13-11. TLD locations on, and near, the Laboratory site 13-18

Table XIII-1 Dose Conversion Factors (DCF) for Calculating Internal Doses....13-20
Table XIII-2 Dose Conversion Factors (DCF) for Calculating External Doses....13-22

14.0 FACILITY EXPANSION, DECONTAMINATION, AND DECOMMISSIONING....14-1
14.1 Facility Expansion....14-1
14.2 Decontamination....14-1
14.3 Maintenance and Operations....14-1
14.4 Dismantling and Decommissioning....14-2

15.0 SUMMARY OF EMERGENCY RESPONSE PLAN....15-1
15.1 Emergency-response Organization....15-1
15.2 Evacuation....15-2
15.3 Training....15-2
15.4 Exercises....15-2
15.5 CCS Emergency Preparedness Plan....15-2

Figures

Fig. 15-1. Evacuation routes for the CCS Site....15-4

16.0 SUMMARY PLAN FOR EMPLOYEE TRAINING....16-1
16.1 Training Needs....16-1
16.2 Documentation....16-1
16.3 CCS....16-2

17.0 SUMMARY PLAN FOR OPERATING PROCEDURES....17-1
17.1 Preparing the Procedures....17-1
17.2 Review and Approval of Procedures....17-1
17.3 Modifying the Procedures....17-2
17.4 Management Audit of Compliance with Procedures....17-2

18.0 GLOSSARY....18-1

Appendix A Environmental Assessment of the GTA Site....A-1

Appendix B Design Criteria Comparison....B-1

VOLUME 3

Appendix C "Conceptual Design Report, Neutral Beam Ground Test Accelerator - Two," Los Alamos National Laboratory Report (March 1986)....C-1

Appendix D Radiation Hazard During GTA Phase 0....D-1

Appendix E Shielding Documents....E-1

Appendix F 24-MeV Shielding....F-1

Appendix G GTA-100, Shielding Summary, November 18, 1988....G-1

Appendix H Waveguide Streaming with 24-MeV Accelerator Shielding....H-1

Appendix I Commercial Safety Features of Lasers....I-1

Appendix J ANSI Applicable Tables from Microwave/RF Standard....J-1

Appendix K QA Plan K-1
Appendix L GTA Health and Safety Policy Statement and GTA Safety Plan L-1
Appendix M AT Division ALARA Program Plan M-1
Appendix N Waste Management SOP N-1
Appendix O Emergency Preparedness Plans O-1
Appendix P CVI Specification for Piping Fabrication P-1
Appendix Q Refurbishment and Recertification Program for the LH2 Storage Dewar Q-1
Appendix R Analysis of the Hydrogen Vent Rates and Thermal Radiation R-1
Appendix S Keith Boyer Committee Report S-1
Appendix T Radiation Personnel Safety System T-1
Appendix U Phase 2 Shielding Calculations U-1

VOLUME 1

1.0 INTRODUCTION....1-1
1.1 Program Description....1-1
1.2 Objectives....1-1
1.3 Classification....1-2
1.4 GTA Organization....1-2
1.5 GTA Facility....1-2
1.5.1 GTA Site and Building MPF-365....1-2
Fig. 1-1. GTA program integrated within the Laboratory....1-3
Fig. 1-2. GTA organization divided into the six sectors of the experimental system....1-4
1.5.2 Experimental System....1-5
Table I-1 GTA Experimental Configurations and their Relationship to the FSAR....1-5
Fig. 1-3. Location of GTA and other TA-53 Site structures at AT Division....1-6
1.5.3 Cryogenic-cooling Systems....1-7
1.6 Experiments and FSAR Phasing....1-7
1.7 Hazardous Materials and Waste Products....1-8
1.7.1 Cryogens....1-8
1.7.2 Laboratory Chemicals and Solvents....1-8
1.7.3 Activated Air....1-9
1.7.4 Potentially Activated Water....1-9
1.7.5 Activated Equipment....1-9

Figures and Tables

Fig. 1-1. GTA program integrated within the Laboratory....1-3
Fig. 1-2. GTA organization divided into the sectors of the experimental system....1-4
Fig. 1-3. Location of GTA and other TA-53 Site structures at AT Division....1-6

Table I-1 GTA Experimental Configurations and their Relationship to the FSAR....1-5

2.0 SUMMARY/CONCLUSION....2-1
2.1 Risks Associated with the CCS....2-1
Table II-1 Matrix of Accident Probability and Hazard Severity Evaluation....2-3
2.2 Risks from Natural Phenomena....2-4
2.3 Risks from Normal Operations....2-4
2.4 Risks from Accidents or Malfunctions....2-5
2.5 Siting....2-7
2.6 Impact on, or from, Nearby Facilities....2-8
2.7 Training....2-9
2.8 Conclusions....2-10

Figures and Tables

Fig. 2-1. TA-53 exhaust stack locations....2-11

Table II-1 Matrix of Accident Probability and Hazard Severity Evaluation....2-3

3.0 SITE DESCRIPTION AND ASSESSMENT....3-1
3.1 Geographic Setting and Land Use....3-1
3.1.1 GTA Site....3-4
3.1.1.1 Cryogenic-cooling System (CCS) Site....3-4
3.2 Geology and Seismology....3-9
3.2.1 Site-specific Geology and Seismology....3-9
3.3 Hydrology....3-12
3.3.1 Site-specific Hydrology....3-13
3.4 Climatology and Meteorology....3-13

3.4.1 Site-specific Climatology and Meteorology 3-14
3.5 Population Distribution 3-17
3.5.1 Site-specific Population 3-17
3.6 Ecological Features 3-18
3.6.1 Site-specific Ecology 3-18

Figures and Tables

Fig. 3-1. Location of Los Alamos National Laboratory. 3-2
Fig. 3-2. Location of the GTA in Los Alamos County 3-3
Fig. 3-3. Location of GTA at AT Division. 3-5
Fig. 3-4. CCS site. 3-6
Fig. 3-5. Geology of the Los Alamos, NM area. 3-10
Fig. 3-6. Earthquake hazard at Los Alamos, NM. 3-11
Fig. 3-7. Wind rose for the Mesatop Technical Area (TA-50). 3-15
Fig. 3-8. Wind hazard at Los Alamos National Laboratory. 3-16

Table III-1 1990 Population Within 80 km of Los Alamos 3-17

4.0 DESCRIPTION OF FACILITY 4-1
4.1 Site and Building MPF-365 4-1
4.1.1 Design Criteria 4-1
4.1.2 Location 4-4
4.1.3 Building MPF-365 Layout 4-4
4.1.3.1 Office/Laboratory Support Complex 4-4
4.1.3.2 High Bay Equipment Area 4-14
4.1.3.3 Beam Tunnel 4-14
4.1.3.3.1 Plug Doors 4-15
4.1.3.3.2 Hinge-hung Shield Doors 4-15
4.1.3.3.3 Truck Entrances 4-15
4.1.3.3.4 Vertical Access Chase 4-15
4.1.3.3.5 Laser Basement 4-16
4.1.3.3.6 Waveguide Basement 4-16
4.1.3.4 North Mechanical Room 4-16
4.1.3.5 40-kW Cryogenic Equipment Room 4-16
4.1.3.6 750-W Cryogenic Pump Room 4-16
4.1.4 Heating, Ventilating, and Air Conditioning (HVAC) 4-17
4.1.4.1 HVAC Control 4-17
4.1.4.2 HVAC Standards 4-17
4.1.4.3 Air Intakes 4-19
4.1.4.4 Air Exhaust 4-19
4.1.5 Fire-protection System 4-19
4.1.6 Lightning Protection 4-23
4.1.7 Building Utilities 4-23
4.1.7.1 Electrical Power Distribution 4-23
4.1.7.2 Electrical Substation Oil Containment 4-29
4.1.7.3 Grounding 4-29
4.1.7.4 Telephones 4-30
4.1.7.5 Natural Gas 4-30
4.1.7.6 Sewage 4-30
4.1.7.7 Building Services 4-30
4.1.8 Shielding 4-31
4.1.9 Environmental, Safety, and Health (ES&H) Protection Systems 4-33
4.2 Experimental Equipment 4-34
4.2.1 Ground Test Accelerator 4-34
4.2.1.1 Injector 4-34
4.2.1.2 425-MHz Radio-frequency Quadrupole 4-44
4.2.1.3 425-MHz Intertank Matching Section 4-45

4.2.1.4 850-MHz Drift-tube Linac 4-45
4.2.2 Output Optics 4-50
4.2.2.1 HEBT 4-50
4.2.2.2 Bend 4-53
4.2.2.3 Telescope 4-55
4.2.2.4 Fast Steerer 4-59
4.2.2.5 Beam Stops 4-59
4.2.2.5.1 Intermediate Beam Stop 4-59
4.2.2.5.2 Final Beam Stop 4-62
4.2.3 Neutral Beam System 4-63
4.2.3.1 WAFFOG Experimental Assembly 4-63
4.2.3.2 Pinhole Plate Station 4-63
4.2.3.3 Sweep Magnet 4-68
4.2.3.4 Detector Station 4-68
4.2.3.5 Vacuum-enclosure Vessels 4-72
4.2.3.6 Stand Alone Water-cooling System 4-72
4.2.4 Diagnostics 4-72
4.2.4.1 Experiments 1C and 2A 4-73
4.2.4.2 Experiment 2D 4-73
4.2.4.2.1 Offset Beam Line Diagnostics 4-73
4.2.4.2.2 Straight-ahead Beam Line 4-75
4.2.4.2.3 DTL Devices 4-75
4.2.4.2.4 Laser-beam Diagnostic Systems 4-75
4.2.4.3 Safety Issues 4-76
4.3 Accelerator Support Systems 4-77
4.3.1 Accelerator Controls 4-77
4.3.1.1 Control System Architecture 4-78
4.3.1.2 Computer Software 4-82
4.3.1.3 Experimental Operations 4-82
4.3.2 RF-power 4-83
4.3.2.1 Tetrode System 4-89
4.3.2.2 850-MHz RF Klystron System 4-91
4.3.3 The Accelerator/RFQ Vacuum System 4-95
4.3.4 Water-cooling Systems 4-96
4.3.4.1 Potentially Contaminated Water-cooling System 4-99
4.3.5 40-kW Cryogenic-cooling System 4-99
4.3.5.1 Project Requirements 4-107
4.3.5.2 System Performance 4-107
4.3.5.3 Design Considerations 4-108
4.3.5.4 Component Description 4-109
4.3.5.4.1 Cryogenic Piping 4-109
4.3.5.4.2 Cryogenic Valves 4-110
4.3.5.4.3 LH2 Storage Dewar 4-111
4.3.5.4.4 LH2 Run Dewar and Heat Exchangers 4-113
4.3.5.4.5 Hydrogen Vents 4-118
4.3.5.4.6 LN2 Storage Dewar 4-119
4.3.5.4.7 LN2 Run Dewar and Heat Exchanger 4-119
4.3.5.4.8 Circulation Compressor 4-123
4.3.5.4.9 Warm-up Heater 4-125
4.3.5.4.10 Helium-recovery System 4-125
4.3.5.4.11 Helium Purifier 4-128
4.3.5.4.12 Vacuum Pump 4-128
4.3.5.4.13 GTA Simulator 4-130
4.3.5.5 Cryogenic-cooling Distribution Manifold Subsystem 4-130
4.3.5.6 Instrumentation and Controls 4-130
4.3.5.7 Codes and Standards 4-133
4.4 Support Operations 4-137
4.4.1 High Power Cryogenic Test Bed (HPCTB) 4-137

4.4.2 750-W Cryogenic Refrigerator 4-139

Figures and Tables

Fig. 4-1. GTA construction and preliminary operations schedule. 4-2
Fig. 4-2. GTA at AT Division 4-5
Fig. 4-3. GTA facility 4-6
Fig. 4-4. GTA facility — first-floor plan. 4-7
Fig. 4-5. GTA facility — second-floor plan 4-8
Fig. 4-6. GTA facility — third-floor plan. 4-9
Fig. 4-7. GTA facility — fourth-floor plan. 4-10
Fig. 4-8. GTA facility — cross section. 4-11
Fig. 4-9. Cross section of the GTA facility through the vertical access chase. 4-12
Fig. 4-10. Air-handling system for the beam tunnel. 4-13
Fig. 4-11. Air-intake sources. 4-20
Fig. 4-12. GTA electrical distribution diagram. 4-24
Fig. 4-13. Six sectors of the experimental system. 4-35
Fig. 4-14. GTA work breakdown structure. 4-36
Fig. 4-15. Configuration for 24 MeV 4-38
Fig. 4-16. GTA injector block diagram 4-40
Fig. 4-17. HV dome and injector. 4-41
Fig. 4-18. Plan view of the injector. 4-42
Fig. 4-19. Injector grounding plan. 4-43
Fig. 4-20. Typical RFQ accelerator section. 4-46
Fig. 4-21. Radio frequency quadrupole. 4-47
Fig. 4-22. IMS configuration. 4-48
Fig. 4-23. The 24-MeV RFQ, IMS, and DTL systems with vacuum envelopes 4-49
Fig. 4-24. DTL linac and vacuum system with diagnostic spool 4-51
Fig. 4-25. HEBT configuration. 4-52
Fig. 4-26. Bend 4-54
Fig. 4-27. Telescope. 4-57
Fig. 4-28. Collimator. 4-58
Fig. 4-29. Intermediate beam stop. 4-61
Fig. 4-30. Neutral beam. 4-64
Fig. 4-31. Characterization beam stop. 4-66
Fig. 4-32. Pinhole plates. 4-67
Fig. 4-33. Detector station. 4-69
Fig. 4-34. Neutral Beam LN2 cooling system 4-71
Fig. 4-35. Layout of diagnostic plate. 4-74
Fig. 4-36. Control room 4-79
Fig. 4-37. GTA control system interfaces. 4-80
Fig. 4-38. Approximately 40 input-output controllers distribute the I&C functions throughout the 4-81
Fig. 4-39. Ground plan of RF system components. 4-84
Fig. 4-40. Schematic of RF component requirements. 4-85
Fig. 4-41. Block diagram of the RF power. 4-88
Fig. 4-42. Block diagram of klystron system. 4-93
Fig. 4-43. Water-cooling system operational schematic. 4-97
Fig. 4-44. Intentionally Blank 4-98
Fig. 4-45. Intentionally Blank 4-100
Fig. 4-46. Stand alone portable water chiller units. 4-101
Fig. 4-47. Cooling concept selected for the GTA 4-102
Fig. 4-48. Site plan for CCS 4-104
Fig. 4-49. Piping and instrumentation diagram of the helium flow loop. 4-105
Fig. 4-50. Piping and instrumentation diagram of the CCS storage and supply. 4-106
Fig. 4-51. General arrangement of the LH2 storage dewar 4-114
Fig. 4-52. Details of the LH2 run dewar. 4-115
Fig. 4-53. General arrangement of the LH2 run dewar 4-116

Fig. 4-54. General arrangement for the LN2 run dewar....4-120
Fig. 4-55. Details of the LN2 heat exchanger....4-122
Fig. 4-56. General arrangement of the circulating compressor....4-124
Fig. 4-57. General arrangement of the helium-recovery tank....4-126
Fig. 4-58. General arrangement of the GHe recovery compressor....4-127
Fig. 4-59. Helium purifier....4-129
Fig. 4-60. Piping and instrumentation diagram of the cryogenic-cooling distribution manifold subsystem....4-131
Fig. 4-61. One-line power diagram....4-134
Fig. 4-62. Example of a pictorial computer....4-135
Fig. 4-63. Example of an operational mode on the computer....4-136
Fig. 4-64. HPCTB....4-138
Fig. 4-65. 750-W refrigerator layout....4-140
Fig. 4-66. 750-W refrigerator schematic....4-141

Table IV-1 GTA HVAC Data....4-18
Table IV-2 GTA Estimated Electrical Loads....4-26
Table IV-3 Radiation and Shielding for Experiments 2D through 3C....4-31
Table IV-4 Design Requirements for Beam Stops....4-60
Table IV-5 RF Power System Specifications....4-86
Table IV-6 RF Component Requirements....4-87
Table IV-7 Water System Parameters....4-99
Table IV-8 Process Parameters for the LH2 Run Dewar....4-113
Table IV-9 Process Parameters for the LN2 Run Dewar....4-121
Table IV-10 Circulation Compressor Specifications....4-123
Table IV-11 Summary of CCS Instrumentation....4-132

5.0 DESCRIPTION OF OPERATIONS....5-1
5.1 Organization....5-1
5.2 Sequence of Experimental Operations....5-3
5.2.1 Experiments
Phase 0 Operations....5-5
5.2.1.1 GTA Experiments 1A, 1B, and 1C....5-5
5.2.1.2 GTA Experiment 2A....5-5
5.2.2 Experiments
Phase 2 Operations....5-8
5.2.2.1 GTA Experiment 2D....5-8
5.2.2.2 Description of GTA Experiments 3A, 3B, and 3C....5-8
5.2.2.3 Phase 2 Startup....5-12
5.2.2.4 Operations Staffing for Experiments 2D, 3A, 3B, and 3C....5-12
5.3 Experimental Equipment....5-14
5.3.1 Accelerator Hazards....5-14
5.3.1.1 Injector Hazards....5-14
5.3.1.2 RFQ/IMS Hazards....5-16
5.3.1.3 DTL Hazards....5-17
5.3.1.4 Activated Air....5-18
5.3.1.5 Tunnel Radiation....5-18
5.3.2 Output Optics....5-19
5.3.2.1 HEBT....5-19
5.3.2.1.1 Experiment 3A Commissioning....5-19
5.3.2.1.2 HEBT Operation....5-21
5.3.2.2 Bend....5-22
5.3.2.2.1 Bend Commissioning....5-22
5.3.2.2.2 Bend Operation....5-24
5.3.2.3 Telescope....5-25
5.3.2.3.1 Telescope Commissioning....5-25

5.3.2.3.2 Telescope Operation 5-27
5.3.2.4 Fast Steerer 5-27
5.3.2.4.1 Fast Steerer Commissioning 5-27
5.3.2.4.2 Fast Steerer Operation 5-28
5.3.3 Neutral Beam Hazards 5-29
5.3.3.1 Beam Heating 5-29
5.3.3.2 Direct and Indirect Ionizing Radiation Consideration 5-29
5.3.3.3 Nitrogen Release into the Vacuum 5-30
5.3.4 Experimental Diagnostics Hazards 5-33
5.4.1 Accelerator Controls 5-35
5.4.2 RF Power (Hazards) 5-36
5.4.2.1 Electric Shock 5-36
5.4.2.1.1 Klystron System 5-36
5.4.2.1.2 Tetrode System 5-38
5.4.2.2 Oil Spill 5-38
5.4.2.3 High Bay RF Amplifier Radiation 5-40
5.4.3 Accelerator Vacuum Hazard 5-41
5.4.4 Potentially Contaminated Water-cooling System 5-41
5.4.5 CCS 5-41
5.4.5.1 40-kW CCS Operation 5-41
5.4.5.1.1 Pressurization with GHe 5-42
5.4.5.1.2 Purification 5-43
5.4.5.1.3 Cool Down and Standby at 80 K 5-43
5.4.5.1.4 Cool Down and Standby at 22 K 5-44
5.4.5.1.5 Run 5-44
5.4.5.1.6 Warm-up 5-45
5.4.5.1.7 Depressurization 5-45
5.4.5.1.8 Purge and Fill of the LH2 System 5-45
5.4.5.1.9 CCS Readiness Tests 5-46
5.4.5.2 Chemical and Mechanical Processes for the CCS 5-48
5.4.5.3 CCS Control and Monitoring System 5-49
5.4.5.4 Hazardous Materials Handling 5-51
5.4.5.5 Control Operations Method 5-51
5.4.5.6 Safety-Related Monitoring and Control Systems 5-53
5.4.5.7 Operational Reliability and Maintenance 5-55
5.4.5.8 Operations or Shut Down Under Accidental or Abnormal Conditions 5-55
5.5 Types and Quantities of Hazardous Materials Used 5-57
5.5.1 Hazardous Materials used for the 40-kW CCS 5-57
5.5.2 Liquid Nitrogen 5-59
5.5.3 Gaseous and Liquid Hydrogen 5-59
5.5.4 Solvents 5-61
5.5.5 Compressed Gases 5-61
5.5.6 Chemicals in Laboratories and Shops 5-61
5.5.7 Cesium Chromate 5-62
5.5.8 Lead Shielding 5-62
5.5.9 Oils 5-62
5.5.10 Water Treatment Chemicals 5-63
5.6 Receiving, Storing, Handling, and Transferring Hazardous Materials 5-63
5.6.1 Liquid Nitrogen 5-63
5.6.2 Hydrogen 5-63
5.6.3 Compressed Gases
Helium, Argon, Sulfur Hexafluoride, and Nitrogen 5-64
5.6.4 Solvents 5-64
5.6.5 Chemicals 5-64
5.6.6 Cesium Chromate 5-65
5.6.7 Lead Shielding 5-65
5.7 Component Activation 5-65
5.8 Control Room and Associated Monitoring and Control Systems 5-65

5.8.1 All Accelerator Subsystems—Status and Control 5-67
5.8.2 High-voltage Interlocks 5-71
5.8.3 Radiation Protection Safety System 5-71
5.8.4 Run Permit 5-71
5.8.5 Fast Protect 5-73
5.8.6 Cryogenic Cooling System (CCS) 5-76
5.8.7 Control-room Operations 5-77
5.8.8 CCS Fire Alarm 5-77
5.8.9 Stack Vent Status 5-77
5.8.10 Surveillance TV Monitors 5-78
5.8.11 Hydrogen Monitors 5-78
5.8.12 Oxygen Monitors 5-78
5.8.13 Voice Paging 5-78
5.8.14 CCS Deluge Pull Boxes 5-78
5.9 Support Operations 5-78
5.9.1 High-power RF Testing and/or Conditioning of GTA Structures in the HPCTB 5-79
5.10 Operational Reliability and Maintenance 5-79
5.11 Safety-related Operations and Control Systems 5-81
5.11.1 RPSS 5-81
5.11.2 Electrical Interlocks 5-81
5.11.3 Laser Interlocks 5-82
5.11.4 CCS Operations 5-82
5.11.5 Fast Protect 5-82
5.11.6 Run Permit 5-82
5.11.7 Oxygen Monitors 5-82
5.11.8 Hydrogen Monitors 5-82
5.11.9 TV Surveillance 5-83
5.11.10 Tunnel Ventilation Monitors 5-83
5.11.11 Vacuum Interlocks 5-83
5.11.12 Gas Sampling 5-83
5.12 Safe Shut-down under Accident or Abnormal Operations 5-83

Figures and Tables

Fig. 5-1. Organization for GTA operations 5-2
Fig. 5-2. GTA experiments 1A, 1B, and 1C. 5-6
Fig. 5-3. GTA Experiment 2A 5-7
Fig. 5-4. GTA Experiment 2D 5-9
Fig. 5-5. Experiment 3A. 5-11
Fig. 5-6. Experiment 3C. 5-13
Fig. 5-7. Experiment 3B 5-23
Fig. 5-8. Experiment 3B installation 5-26
Fig. 5-9. Radiation dose vs. cooling time. 5-31
Fig. 5-10. Neutral Beam LN2 cooling system 5-32
5.4 Accelerator Support Systems 5-35
Fig. 5-11. Block diagram of klystron modulator safety interlock system. 5-37
Fig. 5-12. Block diagram of tetrode safety interlock system. 5-39
Fig. 5-13. Hazardous material storage 5-60
Fig. 5-14. Control room-second floor 5-66
Fig. 5-15. Console group one 5-68
Fig. 5-16. Console group two. 5-69
Fig. 5-17. Console group three. 5-70
Fig. 5-18. Run permit logic. 5-72
Fig. 5-19. Run permit switch and status panel. 5-74
Fig. 5-20. Fast protect implementation. 5-75
Fig. 5-21. HPCTB. 5-80

Table V-1 Experimental Objectives 5-3

Table V-2 Experimental Components....5-4
Table V-3 Hazardous Materials Used in MPF-365....5-58
Table V-4 Hazardous Materials Used in the Operation of the CCS....5-59
Table V-5 Summary of Operations and Systems to Maintain Safe Control of GTA....5-81

VOLUME 2

6.0 FAILURE MODES AND EFFECTS ANALYSIS....6-1
6.1 Experimental Equipment....6-1
6.1.1 Ground Test Accelerator....6-1
6.1.1.1 Injector....6-1
6.1.1.2 RFQ, DTL, and IMS....6-2
6.1.2 Optics....6-2
6.1.3 Primary Beam Stops....6-2
6.1.4 Neutral Beam....6-9
6.1.5 Diagnostics....6-9
6.2 Accelerator Support Systems....6-9
6.2.1 RF Power Systems....6-9
6.2.2 Accelerator Vacuum System....6-16
6.2.3 Water-cooling System....6-16
6.2.4 Cryogenic-cooling System....6-21
6.2.5 Cryogenic Cooling Distribution Manifold Subsystem....6-63
6.3 Support Operations/Off-line Test Equipment....6-71
6.3.1 HPCTB....6-71
6.3.2 750-W Refrigerator....6-71
6.4 GTA Safety Systems and Other Systems....6-72
6.4.1 Shielding....6-72
6.4.2 Radiation Personnel Safety System....6-73
6.4.3 Run-permit System....6-80
6.4.4 Fast-Protect System....6-80
6.4.5 Computer Control Network....6-80
6.4.6 Input-Output Controllers....6-80
6.4.7 Operator Interface Consoles....6-84
6.4.8 Fire Protection Systems....6-84
6.4.9 Beam-tunnel Ventilation System....6-84
6.4.10 Electrical Power to Component Systems....6-84
6.4.11 Telephone/Paging System....6-90
6.4.12 Cranes/Forklifts....6-90
6.4.13 Oxygen Monitors....6-90
6.4.14 Hydrogen Monitoring System....6-90

Figures and Tables

Fig. 6-1. Optics....6-8
Fig. 6-2. 24-MeV intermediate beam-stop instrumentation drawing....6-10
Fig. 6-3. Schematic of final beam stop....6-13
Fig. 6-4. RPSS....6-79
Fig. 6-4. RPSS....6-79
Fig. 6-5. Oxygen monitor....6-99

Table VI-1 First Descriptor for the Effects Category of the FMEAs....6-1
Table VI-2 Second Descriptor for the Effects Category of the FMEAs....6-1
Table VI-3 FMEAs for the Injector....6-3
Table VI-4 FMEAs for RFQ/IMS....6-5
Table VI-5 FMEAs for DTL....6-6
Table VI-6 FMEAs for Output Optics....6-7
Table VI-7 FMEAs for Intermediate Beam Stops....6-11

Table VI-8 FMEAs for Final Beam Stops 6-12
Table VI-9 FMEA for Neutral Beam 6-14
Table VI-10 FMEAs for Electromagnets Requiring Cooling 6-14
Table VI-11 FMEAs for LINDA Laser 6-15
Table VI-12 FMEAs for the High-voltage Power Supply 6-17
Table VI-13 FMEAs for the RF High-voltage Power System Capacitor Bank 6-18
Table VI-14 FMEAs for RF System 850-MHz Tetrode 6-19
Table VI-15 FMEAs for 850-MHz Klystron Modulator 6-19
Table VI-16 FMEAs for RF System 425 MHz Tetrode 6-20
Table VI-17 FMEAs for RF System Radiation Monitoring 6-20
Table VI-18 FMEAs for GTA Water-cooling System 6-22
Table VI-19 FMEAs for LH2 Subsystem of the CCS 6-25
Table VI-20 FMEAs for LN2 Subsystem of the CCS 6-35
Table VI-21 FMEAs for the He Subsystem of the CCS 6-42
Table VI-22 FMEAs for the He Distribution Manifold Subsystems of the CCS 6-64
Table VI-23 FMEAs for Tunnel Shielding Envelope 6-74
Table VI-24 FMEAs for Radiation Personnel Safety System 6-75
Table VI-25 FMEA for RPSS-Injector Interface 6-77
Table VI-26 FMEA for RPSS-RF Power Interface 6-77
Table VI-27 FMEAs for RPSS Electrical 6-77
Table VI-28 Intentionally Blank 6-78
Table VI-29 FMEAs for the Run-permit System 6-81
Table VI-30 FMEAs for Fast Protect System 6-83
Table VI-31 FMEAs for Computer Control Network 6-83
Table VI-32 FMEAs for Beam Line Input-output Controllers 6-85
Table VI-33 FMEAs for Operator Interface Console 6-85
Table VI-34 FMEAs for Fire Protection 6-86
Table VI-35 FMEAs for Water Deluge System for LH2 Run and Storage Dewars 6-88
Table VI-36 FMEAs for Beam Tunnel Ventilation System 6-89
Table VI-37 FMEAs for Electrical Power to Component Systems 6-91
Table VI-38 FMEAs for Telephone/Paging System 6-97
Table VI-39 FMEAs for Crane and Forklifts 6-98
Table VI-40 FMEAs for Oxygen Monitors 6-100
Table VI-41 FMEAs for Hydrogen Detectors 6-102

7.0 ACCIDENT ANALYSIS 7-1
7.1 Potential Hazards and Their Mitigation 7-1
7.2 Accident Analysis for the Experimental Equipment 7-1
7.2.1 Ground Test Accelerator 7-1
7.2.1.1 Injector Accidents 7-1
7.2.1.1.1 Capacitor Bank Accident 7-1
7.2.1.1.2 Hydrogen Fire 7-6
7.2.1.1.3 Cesium Exposure 7-16
7.2.1.2 RFQ/IMS/DTL Accidents 7-176
7.2.1.2.1 RF Power Leakage 7-16
7.2.1.2.2 X-ray Radiation 7-17
7.2.1.2.3 GHe Leakage 7-17
7.2.3 Output Optics Accidents 7-17
7.2.3.1 RF Power Leakage and X Radiation 7-17
7.2.3.2 Electrical Accidents 7-18
7.2.3.3 Radiation Accidents 7-19
7.2.3.4 Vacuum Loss 7-19
7.2.4 Neutral Beam Accidents 7-20
7.2.4.1 Water-cooling Systems Accidents 7-20
7.2.4.1.1 Mechanical Failure of Equipment 7-20
7.2.4.1.2 Electrical Failure of Equipment 7-20

7.2.4.1.3 Major Water Spill or Leak 7-20
7.2.4.2 Ionizing Radiation Accidents 7-21
7.2.4.3 Cryogens 7-21
7.2.5 Diagnostics 7-21
7.2.5.1 Chemical and Laser Hazards 7-21
7.2.5.2 Offset Beam Line Electromagnet Interlock Failure 7-21
7.2.5.3 Offset Beam Line Electromagnet Warning Light Failure 7-22
7.2.5.4 Electrical Shock 7-22
7.2.5.5 High Magnetic Fields 7-22
7.3 Accident Analysis for Accelerator Support Systems 7-23
7.3.1 Accelerator Control Accidents 7-23
7.3.2 RF Accidents 7-23
7.3.2.1 High-voltage Accident 7-23
7.3.2.2 X-ray and RF Radiation Accident 7-24
7.3.2.3 Oil Leak Accident 7-25
7.3.3 Vacuum 7-25
7.3.4 Water Cooling System Accidents 7-26
7.3.4.1 Mechanical Failure of Equipment 7-26
7.3.4.2 Electrical Failure of Equipment 7-26
7.3.4.3 Major Water Spill or Leak 7-27
7.3.5 Postulated Accidents for the CCS 7-27
7.3.5.1 Hydrogen Fire or Internal Combustion 7-29
7.3.5.1.1 LH2 Transfer Line Break 7-30
7.3.5.1.2 LH2 Fill Line Break 7-31
7.3.5.1.3 Massive Rupture of the LH2 Storage or Run Dewar 7-32
7.3.5.1.4 Rupture of the LH2 Storage or Run Dewar by a Small Projectile 7-32
7.3.5.1.5 Projectile Penetrates Vacuum Vessel but not Liquid Vessel 7-33
7.3.5.1.6 Projectile Penetrates the Vacuum and Liquid Vessels 7-34
7.3.5.1.7 Combustion Inside the LH2 Storage or Run Dewar 7-35
7.3.5.2 Hydrogen Release to the Atmosphere 7-35
7.3.5.2.1 Overflow of LH2 During Transfer to Run Dewar 7-36
7.3.5.2.2 Break in the GHe Circulation Line at the GHe/LH2 Heat Exchanger 7-36
7.3.5.2.3 Disconnection of Fill Line During LH2 Fill Process 7-37
7.3.5.3 Asphyxiation and Frostbite 7-38
7.3.5.3.1 GHe Circulation Line Break in the Beam Tunnel 7-39
7.3.5.3.2 GHe Circulation Line or LN2 Supply Line Break in the Equipment Room 7-40
7.3.5.3.3 GHe Circulation Line Break 7-40
7.3.5.3.4 LN2 Supply Line Break 7-41
7.3.5.4 Stored-energy Release 7-41
7.3.5.5 Conclusions from Analyses of CCS 7-42
7.4 Accident Analysis for Accelerator Support Operations 7-43
7.4.1 Personnel Exposed to Radiation from High Power DTL Testing in HPCTB Tank 7-43
7.4.2 750-W Helium Refrigerator Accidents 7-43
7.4.2.1 Electrical Accident 7-44
7.4.2.2 Mechanical Accident 7-44
7.4.2.3 Pneumatic Accident 7-44
7.4.2.4 Thermal Accident 7-44
7.4.3 High-pressure Gases 7-45
7.4.4 Cryogens in MPF-365 7-45
7.4.5 Asphyxiation 7-45
7.5 Accidents from Safety System Malfunctioning 7-46
7.5.1 RPSS Accidents 7-46
7.5.1.1 Person Left Inside Exclusion Area 7-47
7.5.1.2 Person Enters Exclusion Area While Accelerator is Operating 7-47
7.5.2 Accelerator Protection Systems Accidents 7-47

7.5.2.1 Run-permit System Malfunction 7-48
7.5.2.2 Fast-protect System Malfunction 7-48
7.6 Electrical Power 7-48
7.7 Industrial Accidents 7-50
7.7.1 Crane or Forklift Operation Accidents 7-50
7.7.2 Occupational Injury Accidents 7-50
7.8 Fire Accidents 7-51
7.9 Chemical Spill 7-51
7.10 Accidents Associated with Natural Phenomena 7-51
7.10.1 Flood 7-51
7.10.2 Earthquake 7-52
7.10.3 High Winds 7-52
7.10.4 Lightning 7-52

Tables

Table VII-1 Potential Hazards and Their Mitigation 7-2
Table VII-2 Qualitative Accident Hazard Severity 7-5
Table VII-3 Qualitative Accident Probabilities 7-6
Table VII-4 Summary of Accidents 7-7
Table VII-5 Summary of Risk Resulting from Postlated Accidents 7-12

8.0 OPERATIONAL SAFETY REQUIREMENTS 8-1
8.1 Introduction 8-1
8.1.1 Facility 8-2
8.1.2 Experimental System 8-2
8.1.3 Cryogenic-cooling System 8-2
8.2 Safety Limits 8-3
8.2.1 Radioactive Emissions 8-4
8.2.2 CCS Hazardous Materials 8-4
8.3 Limiting Conditions for Operation 8-4
8.3.1 Radiation Personnel Safety System (RPSS) 8-4
8.3.2 Tunnel Ventilation System 8-5
8.3.3 High Efficiency Particulate Air (HEPA) Filters 8-5
8.3.4 Moveable Shielding 8-6
8.3.5 Oxygen Monitors 8-6
8.3.6 Hydrogen Detectors 8-7
8.3.7 LH2 Run Dewar Vent Stack Flare 8-8
8.4 Design Features 8-8
8.5 Administrative Controls 8-9
8.5.1 Procedures 8-9
8.5.2 Training 8-9

Tables

Table VIII-1 GTA Experimental Configurations and Their Relationship to the FSAR 8-3

9.0 QUALITY ASSURANCE PROGRAM 9-1
9.1 Site and Building MPF-365 9-1
9.1.1 Organization 9-1
9.1.2 Summary of QA Program Plan 9-1
9.1.3 QA Records 9-3
9.1.4 Engineering QA Audits 9-3
9.1.5 Administrative Procedures 9-3
9.2 GTA 9-3
9.2.1 Organization 9-3

9.2.2 QA Summary 9-5
9.2.3 QA Records 9-6
9.2.4 QA Audits 9-6
9.2.5 Preoperational Testing and Retesting 9-7
9.2.6 Administrative Procedures 9-7
9.2.7 Configuration Management 9-7
9.3 CCS 9-7
9.3.1 QA Organization 9-8
9.3.2 Summary of QA Program Plan 9-8
9.3.3 QA Records 9-8
9.3.4 QA Audits 9-8
9.3.5 Preoperational Testing 9-19
9.3.6 Administrative Procedures 9-19

Figures

Fig. 9-1. GTA organization showing QA office. 9-5
Fig. 9-2. Table of contents for the CVI QA manual. 9-10
Fig. 9-3. Responsibilities of the QA manager 9-11
Fig. 9-4. QA records. 9-15
Fig. 9-5. QA audits. 9-18

10.0 ES&H MANAGEMENT PROGRAM 10-1
10.1 Organizational Structure 10-1
10.2 GTA Safety Plan 10-1
10.3 As Low as Reasonably Achievable Program 10-1
10.4 Safety Analysis Program 10-1
10.5 Operational Readiness Reviews 10-2
10.6 Administration and Records 10-2
10.7 ES&H Programs 10-2
10.8 GTA Responsibilities 10-4
10.8.1 Division Leader 10-4
10.8.2 Program Manager 10-4
10.8.3 Division Safety Officer 10-4
10.8.4 Supervisors 10-4
10.8.5 Employees 10-5
10.9 Plant Security 10-5
10.9.1 Hazards and Security 10-7

Figures

Fig. 10-1. GTA organization showing safety office 10-3
Fig. 10-2. Fenced perimeter of the secure GTA area at AT Division 10-6

11.0 ENVIRONMENTAL, SAFETY, AND HEALTH SYSTEMS CRITICAL TO SAFETY 11-1
11.1 Radiation Personnel Safety System 11-1
11.2 Shielding 11-4
11.3 Interlock Systems 11-4
11.3.1 Injector and RF Power-system Interlock Chain 11-5
11.4 Fire Detection and Suppression Systems 11-8
11.5 Oxygen Monitors 11-8
11.6 Radiation Monitoring 11-8
11.6.1 Neutron Monitoring 11-8
11.6.2 Air Activation Monitoring 11-9
11.7 Hydrogen Monitors 11-10

11.8 Heating, Ventilation, and Air Conditioning 11-11
11.9 Cryogenic-cooling System (CCS) 11-11
11.9.1 Hydrogen System 11-11
11.9.2 Helium System 11-14

Figures and Tables

Fig. 11-1. Tetrode. 11-6
Fig. 11-2. Klystron modulator. 11-7
Table XI-2 CCS Pressure Summary 11-12
11.9.2 Helium System 11-14

12.0 SUMMARY OF WASTE-MANAGEMENT PROGRAM 12-1
12.1 Low-level Radioactive Waste 12-1
12.2 Radioactive-liquid Waste 12-2
12.3 Hazardous-chemical Waste 12-3
12.4 Nonhazardous Wastes 12-3

13.0 ENVIRONMENTAL MONITORING PROGRAM 13-1
13.1 Objectives and Criteria 13-1
13.2 Guards Against Accumulating Radioactive and Hazardous Materials 13-1
13.3 Potential Exposure Pathways 13-2
13.4 Air Monitoring 13-2
13.4.1 TA-53 Network 13-2
13.4.2 Analyses 13-4
13.4.3 Radioactive Airborne Emissions 13-4
13.4.4 Nonradioactive Airborne Chemicals 13-7
13.4.4.1 Acid Precipitation 13-7
13.4.4.2 Ambient Air Monitoring 13-7
13.4.4.3 Toxic Air Pollutant Sampling Program 13-7
13.5 Meteorological Modeling, Dispersion, and Annual Wind Rose 13-7
13.5.1 TA-53 Network 13-8
13.6 Water Monitoring 13-8
13.6.1 TA-53 13-8
13.6.2 Analyses 13-8
13.7 Soil and Sediment Sampling 13-11
13.7.1 Analyses 13-11
13.8 Foodstuffs Monitoring 13-14
13.8.1 Analyses 13-14
13.9 Monitoring External Penetrating Radiation 13-14
13.9.1 TA-53 Network 13-17
13.9.2 Analyses 13-17
13.10 Off-site Dose Assessment Methodology 13-17

Figures and Tables

Fig. 13-1. Air-sampling locations on or near the Laboratory site. 13-3
Fig. 13-2. Summary of tritium releases. 13-5
Fig. 13-3. Summary of plutonium releases. 13-5
Fig. 13-4. Airborne activation product emissions. 13-6
Fig. 13-5. Regional surface-water, sediment, and soil sampling locations 13-9
Fig. 13-6. Surface and ground-water sampling locations on, and near, the Laboratory site 13-10
Fig. 13-7. Soil sampling on, and near, the Laboratory site. 13-12
Fig. 13-8. Sediment sampling locations on, and near, the Laboratory site. 13-13
Fig. 13-9. Fish and produce sampling locations. 13-15
Fig. 13-10. Locations of beehives. 13-16
Fig. 13-11. TLD locations on, and near, the Laboratory site. 13-18

Table XIII-1 Dose Conversion Factors (DCF) for Calculating Internal Doses 13-20
Table XIII-2 Dose Conversion Factors (DCF) for Calculating External Doses 13-22

14.0 FACILITY EXPANSION, DECONTAMINATION, AND DECOMMISSIONING 14-1
14.1 Facility Expansion 14-1
14.2 Decontamination 14-1
14.3 Maintenance and Operations 14-1
14.4 Dismantling and Decommissioning 14-2

15.0 SUMMARY OF EMERGENCY RESPONSE PLAN 15-1
15.1 Emergency-response Organization 15-1
15.2 Evacuation 15-2
15.3 Training 15-2
15.4 Exercises 15-2
15.5 CCS Emergency Preparedness Plan 15-2

Figures

Fig. 15-1. Evacuation routes for the CCS Site 15-4

16.0 SUMMARY PLAN FOR EMPLOYEE TRAINING 16-1
16.1 Training Needs 16-1
16.2 Documentation 16-1
16.3 CCS 16-2

17.0 SUMMARY PLAN FOR OPERATING PROCEDURES 17-1
17.1 Preparing the Procedures 17-1
17.2 Review and Approval of Procedures 17-1
17.3 Modifying the Procedures 17-2
17.4 Management Audit of Compliance with Procedures 17-2

18.0 GLOSSARY 18-1

Appendix A Environmental Assessment of the GTA Site A-1

Appendix B Design Criteria Comparison B-1

VOLUME 3

Appendix C "Conceptual Design Report, Neutral Beam Ground Test Accelerator - Two," Los Alamos National Laboratory Report (March 1986) C-1

Appendix D Radiation Hazard During GTA Phase 0 ..... D-1

Appendix E Shielding Documents E-1

Appendix F 24-MeV Shielding F-1

Appendix G GTA-100, Shielding Summary, November 18, 1988 ..... G-1

Appendix H Waveguide Streaming with 24-MeV Accelerator Shielding H-1

Appendix I Commercial Safety Features of Lasers I-1

Appendix J ANSI Applicable Tables from Microwave/RF Standard J-1

Appendix K QA Plan.....K-1
Appendix L GTA Health and Safety Policy Statement and GTA Safety Plan.....L-1
Appendix M AT Division ALARA Program Plan.....M-1
Appendix N Waste Management SOP.....N-1
Appendix O Emergency Preparedness Plans.....O-1
Appendix P CVI Specification for Piping Fabrication.....P-1
Appendix Q Refurbishment and Recertification Program for the LH2 Storage Dewar.....Q-1
Appendix R Analysis of the Hydrogen Vent Rates and Thermal Radiation.....R-1
Appendix S Keith Boyer Committee Report.....S-1
Appendix T Radiation Personnel Safety System.....T-1
Appendix U Phase 2 Shielding Calculations.....U-1

1.0 INTRODUCTION....1
1.1 Program Description....1
1.2 Objectives....1
1.3 Classification....2
1.4 GTA Organization....2
1.5 GTA Facility....2
1.5.1 GTA Site and Building MPF-365....2
Fig. 1-1. GTA program integrated within the Laboratory....3
Fig. 1-2. GTA organization divided into the six sectors of the experimental system....4
1.5.2 Experimental System....5
Table I-1 GTA Experimental Configurations and their Relationship to the FSAR....5
Fig. 1-3. Location of GTA and other TA-53 Site structures at AT Division....6
1.5.3 Cryogenic-cooling Systems....7
1.6 Experiments and FSAR Phasing....7
1.7 Hazardous Materials and Waste Products....8
1.7.1 Cryogens....8
1.7.2 Laboratory Chemicals and Solvents....8
1.7.3 Activated Air....9
1.7.4 Potentially Activated Water....9
1.7.5 Activated Equipment....9

Figures and Tables

Fig. 1-1. GTA program integrated within the Laboratory....1-3
Fig. 1-2. GTA organization divided into the sectors of the experimental system....1-4
Fig. 1-3. Location of GTA and other TA-53 Site structures at AT Division....1-6

Table I-1 GTA Experimental Configurations and their Relationship to the FSAR....1-5

1.0 INTRODUCTION

This chapter describes the Ground Test Accelerator (GTA) program and its objectives, the security classification, the technical phasing of the program, and the phasing of the final safety analysis report (FSAR). Chapter 1 also describes briefly the GTA facility and the hazardous materials used and waste products generated at the facility. The following chapters describe these subjects in more detail.

1.1 Program Description

The GTA program at the Los Alamos National Laboratory (LANL) is the major element of the national Neutral Particle Beam (NPB) program, which is supported by the Strategic Defense Initiative Office (SDIO). A principal goal of the national NPB program is to assess the feasibility of using hydrogen and deuterium (H^0, D^0) neutral particle beams outside the Earth's atmosphere. The main effort of the NPB program at Los Alamos concentrates on developing the GTA.

The GTA NPB is a hydrogen ion beam (H^-) that has been accelerated to a high energy and has had its excess electrons stripped by a thin foil neutralizer. The beam must first have an electrical charge to be accelerated by electrical fields; then the charged beam is neutralized to travel long distances without being affected by the Earth's magnetic field. To avoid being ionized by the Earth's atmosphere, the NPB must be operated in a vacuum or in outer space (i.e., above 150 kM). A NPB's purpose is to distinguish among incoming missiles to determine which ones contain high-mass warheads and which are low-mass decoys. At higher energies and currents, the NPB can penetrate the warhead to disrupt electronics and, possibly, detonate high explosives. The NPB can be effective over thousands of kilometers and can operate at a velocity that is a large fraction of the speed of light.

The primary function of the GTA program is to evaluate precise methods for generating, sensing, and controlling a NPB. The GTA is designed as a versatile test facility for evaluating compact, negative-ion accelerators; large bore, precision optics, and elements for beam steering; and NPB focus direction and sensing. The GTA program consists of a series of initial experimental configurations that lead to demonstrations of critical NPB technologies with output energies up to 24 MeV.

1.2 Objectives

GTA program objectives are to:

- support the national Strategic Defense Initiative (SDI) program by providing a facility that demonstrates high-performance output parameters for an integrated NPB system;
- provide an early validation of the selected beam-optics design;

- demonstrate a beam brightness orders of magnitude greater than those in existing accelerator or NPB facilities;
- demonstrate the technologies of cryogenic cooling, rapid startup and restart, small-size and low-mass subsystem design, compact accelerating structures, and precisely controlled radio frequency (RF) power systems; and
- serve as a test bed for demonstrations of advanced NPB technology.

1.3 Classification

Beam energies and currents are not classified for the 24-MeV GTA experiments. However, certain performance parameters and other information are classified as defined by the SDIO as directed energy (TND) SDIO/TND Neutral Particle Beam Security Classification Guide, April 1991. (SDIO 1991)

1.4 GTA Organization

The GTA program is integrated within the Accelerator Technology (AT) Division of the Laboratory and the GTA program manager reports to the AT Division leader. AT Division is under the Physics and Life Sciences Directorate (PLS) within LANL. Figure 1-1 depicts this organizational structure. The GTA organization parallels the hardware and operational components of an NPB system including controls and automation, RF power, optics and diagnostics, neutral beam, accelerator, and installation, commissioning, and operations experimental support. The GTA program designates these component areas as sectors in the organization as shown in Fig. 1-2.

1.5 GTA Facility

The GTA facility is at Technical Area 53 (TA-53) at LANL. The construction of the facility is divided into three parts

- the site and building MPF-365, housing the accelerator and peripheral equipment (Section 3.1.1 describes the GTA site in detail);
- the experimental system, including the NPB device and related equipment (Section 4.2 describes the experimental system); and
- the cryogenic-cooling system (CCS) as described in Section 4.3.5.

The GTA is classified as a low-hazard facility, except for the CCS, which is classified as a moderate-hazard facility

1.5.1 GTA Site and Building MPF-365

The general contractor for the accelerator site and building was G.E. Johnson Construction Co., Colorado Springs, Colorado. The architectural engineering firm of Holmes & Narver, Albuquerque, New Mexico, completed the initial design of the site and building. Building MPF-365 consists of two major parts: a shielded, underground beam tunnel of approximately 16,200 ft^2; and a conventional four-story, steel-framed building of approximately 53,800 ft^2. (Section 4.1.8

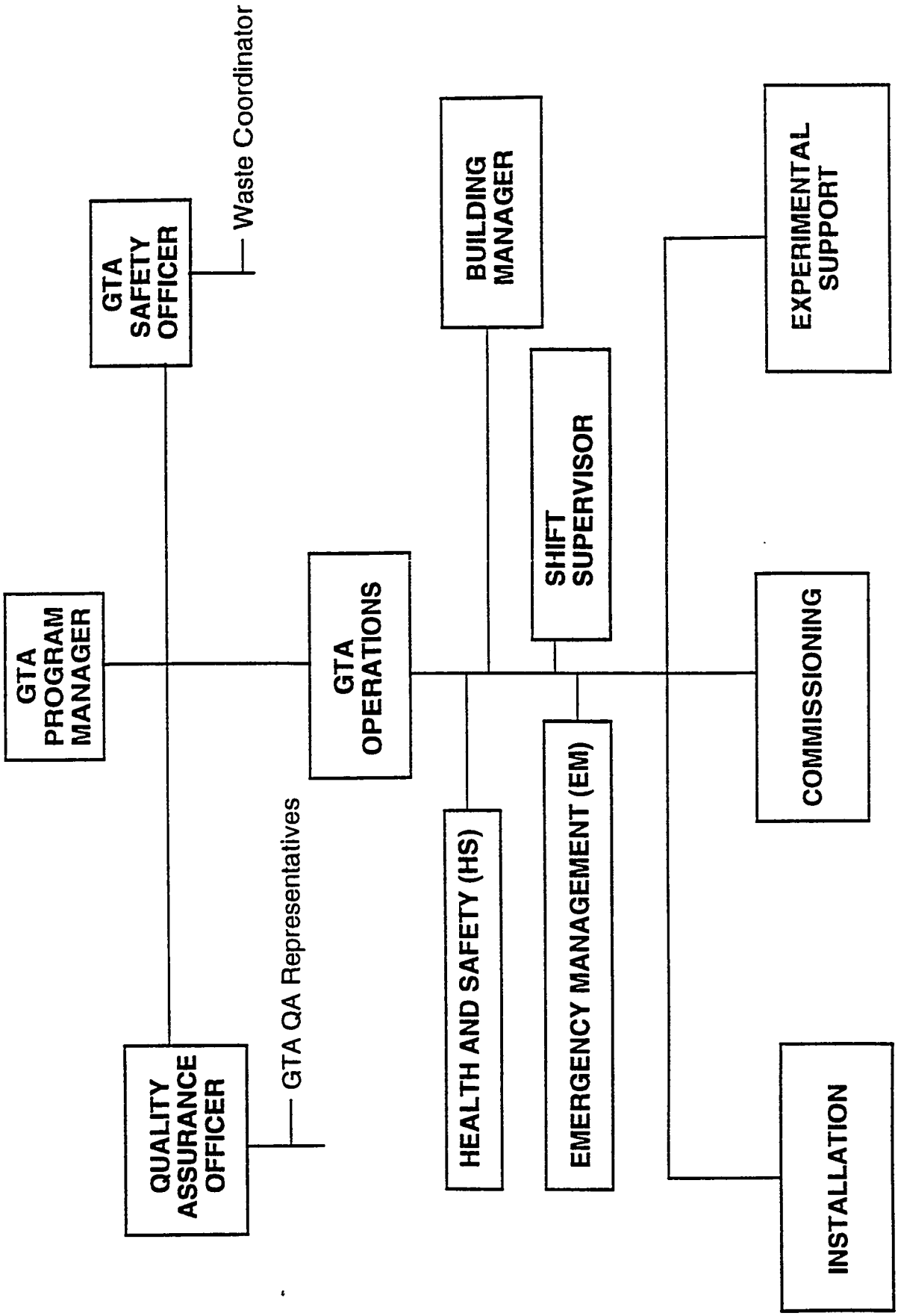

Fig. 1-1. GTA program integrated within the Laboratory.

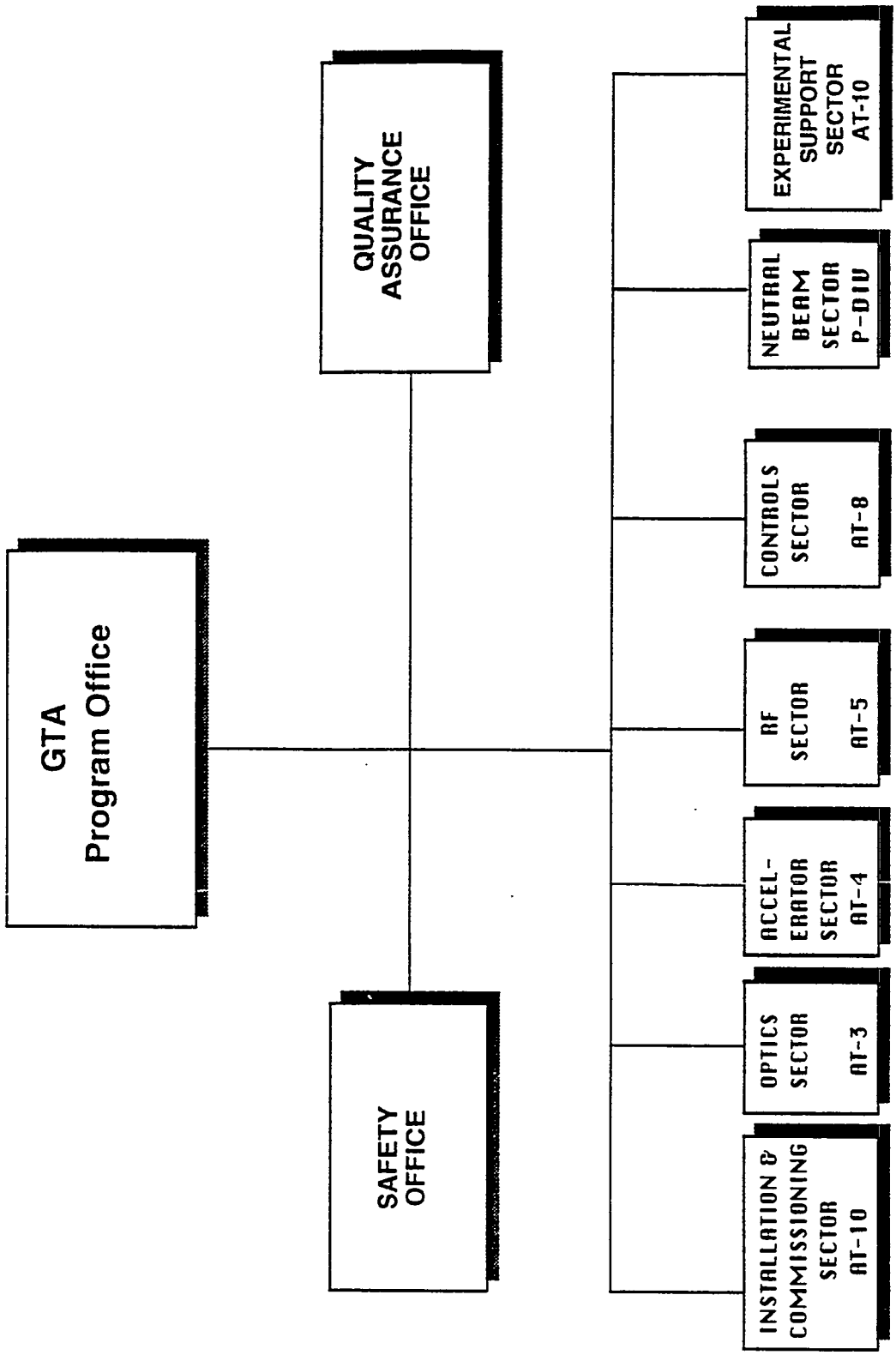

Fig. 1-2. GTA organization divided into the sectors of the experimental system.

discusses the shielding of the tunnel and the layout of the building.) Figure 1-3 shows the location of this building and other TA-53 site structures.

1.5.2 Experimental System

The experimental system consists of a series of hardware configurations that lead to successively higher energies until the 100-MeV high-brightness beam is achieved. Table I-1 shows the GTA experimental configurations, through 24 MeV their sequence, and the planned phasing of the FSAR revisions. Technical personnel in the six sectors shown in Fig. 1-2 are responsible for designing, procuring, and installing the system.

Table I-1 GTA Experimental Configurations and their Relationship to the FSAR[a]

Experiment	Experimental Configuration	Beam Energy Output (MeV)	Beam Current	Schedule	FSAR Phase
1A	Injector and low-energy beam transport	0.035	50 mA	1/90-9/90 (complete)	0
1B	(+)[b] RFQ	2.5	50 mA	10/90-6/91 (complete)	0
1C	(+) IMS	2.5	55 mA	10/91-4/92 (complete)	0
2A	(+) 2βλ DTL (first tank)	3.18	50 mA	7/92-9/92	0
	40-kW cryogenic-cooling system installation and operation	0	N/A	6/91-5/92	1
2D	(+) Complete 2βλ and 1βλ DTL tanks (10 tanks)	24.3	50 mA	7/93-11/93	2
3A[c]	(+)H HEBT and 180° bend	24.3	50 mA	2/94-6/94	2
3B	(+) 24-MeV telescope and steerer	24.3	50 mA	10/94-3/95	2
3C	Beam sensing (WAFFOG)	24.3	50 mA	4/95-8/95	2

[a]Experiments 2B and 2C have been deleted from the experimental plan. The numbering sequence has not changed because of other substantial documentation employing specific experimental numbering.

[b]The (+) indicates the subsystem that is added to the previous configuration.

[c]Experiments 3A through 3C are revised to reflect program changes.

The experimental sequence is described in detail in Section 5.2, and the following is a summary of that section.

The first series of experiments—1A, 1B, 1C, and 2A—test accelerator components up to 3.2 MeV. These components include the injector, radio frequency quadrupole (RFQ), intertank

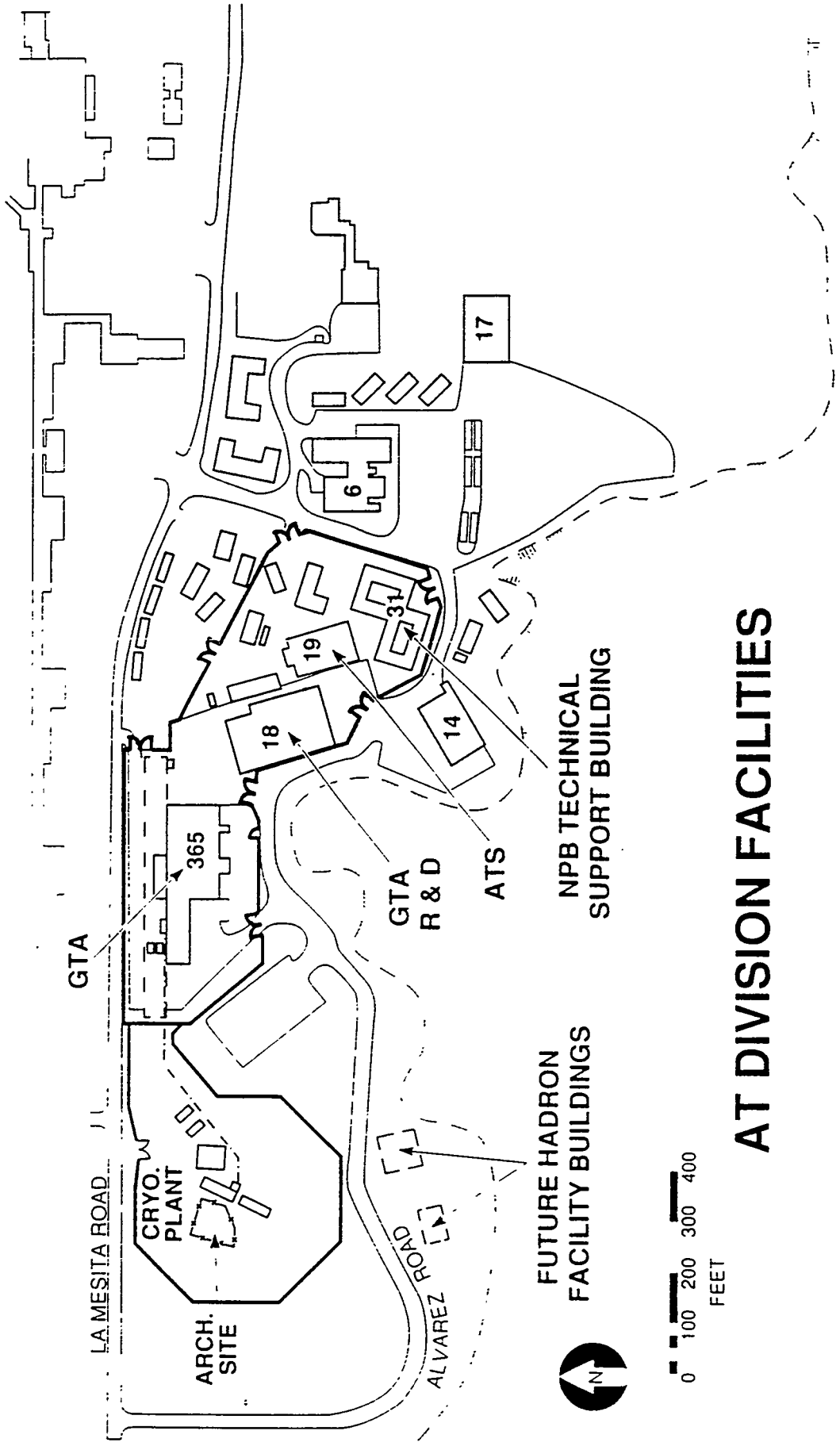

Fig. 1-3. Location of GTA and other TA-53 Site structures at AT Division.

matching section (IMS), and the first drift-tube linac (DTL) module. The accelerator for these experiments is located along the north side of the accelerator tunnel.

The next series, experiments 2D, 3A, 3B, and 3C, test the accelerator performance at 24 MeV. For Experiment 2D, the system is moved to the south side of the beam tunnel, and nine more DTL modules are added to the first DTL module of Experiment 2A to increase the energy to 24 MeV. Next the high-energy beam transport (HEBT) and 180° bend are added, and the beam is characterized during Experiment 3B. The telescope and steerer are then installed along with the output beam tube, beam-characterization system, and 24-MeV beam stop. The optics are characterized in Experiment 3B. Finally, the wire and flourescent fiber offset grid (WAFFOG) beam sensing is installed and tested in Experiment 3C. This completes the 24-MeV experiment sequence.

1.5.3 Cryogenic-cooling Systems

GTA uses two different cryogenic-cooling systems (CCS) for the experiments: a gaseous helium (GHe) refrigerator and a 40-kW LH_2/GHe/LN_2 cryogenic cooling system. Experiments 1 and 2A used a 750-W GHe refrigerator manufactured by Koch Process Systems, Inc., to provide the cryogenic cooling.

Experiments 2D and beyond require a greater cryogenic-cooling capacity, which is provided by a 40-kW LH_2/GHe/LN_2 CCS. Liquid hydrogen will be used to cool gaseous helium by a heat exchanger and the helium will, in turn, cool portions of the GTA experiment. Liquid nitrogen will be used during the preliminary cool-down phase and for initial checkout. The engineering firm, CVI Inc., of Columbus, Ohio, designed, fabricated, installed, and tested the 40-kW CCS according to specifications established by LANL. The CCS employs a LH_2 storage dewar from the U. S. Department of Energy (DOE) Nevada Test Site. It was certified at Los Alamos before its use at the GTA facility. An expansion of the CCS will be required for the 100-MeV experiments. This will involve installing a helium circulator with a larger flow capacity and, therefore, does not affect siting criteria or accident analysis assumptions for the LH_2 system.

1.6 Experiments and FSAR Phasing

The FSAR addresses, in phases, the safety requirements for elements of the experimental program. The GTA program consists of the elements as stated in Table I-1. Safety analysis requirements differ for each element; e.g., Phase 0 did not require the 40-kW CCS, whereas Phase 1 addressed only the 40-kW CCS. To ensure an orderly flow of experiment results and maintain appropriate schedule and program efficiency,

the Laboratory proposed a phased approach to the SAR and the DOE Albuquerque Field Office (AL) and Los Alamos Area Office (LAAO) agreed to this proposal. The Phase 0 SAR was the original document and SAR requirements for the additional experiments are added as revisions.

Phase 0 addressed the first several experiments at low energy (3.2-MeV), which did not require the 40-kW cryogenics plant. The FSAR phasing is related to the experimental program as follows.

- *FSAR Phase 0* - includes operating the injector alone, the injector with the RFQ, the injector with the RFQ and IMS, and the injector with the RFQ, IMS and one module of the DTL. These elements are tested during experiments 1A, 1B, 1C, and 2A, and the maximum energy is less than 3.2 MeV;

- *FSAR Phase 1 Revision* - adds the 40-kW LH_2 CCS, beginning with the initial loading of LH_2 into the storage dewar; and

- *FSAR Phase 2 Revision* - adds nine DTL modules, a high energy beam transport, a 180° bend, a 24-MeV telescope, and a steerer; during experiments 2D and 3 with beam energies up to 24 MeV.

Table I-1 shows how the FSAR phases relate to the experimental configurations.

1.7 Hazardous Materials and Waste Products

Hazardous materials used include cryogens, laboratory chemicals, and solvents. GTA has the potential to generate activated air, water, and equipment as waste products in the high-energy experiments.

1.7.1 Cryogens

Cooling the accelerator for experiments 1 through 2A required two cryogens: liquid nitrogen (LN_2) and GHe. For experiments beyond 2A, LN_2 and LH_2 are used to cool GHe, which, in turn, cools the accelerating sections to cryogenic operating temperature.

1.7.2 Laboratory Chemicals and Solvents

Employees may be exposed to laboratory chemicals by contact, ingestion, or inhalation of aerosols, vapors, and gases during routine laboratory and shop activities, such as welding, soldering, gluing, cleaning, cutting, painting, and analysis. To provide safety and protection to employees, GTA controls hazards through standard operating procedures (SOP), special work permits (SWP), training, protective clothing, eye protection and washes, safety labels, ventilation, respiratory protection, and proper storage areas for both stock and waste chemicals. Employees who work in

the area are given appropriate training and familiarization courses related to material safety data sheets (MSDS) and hazard communication (HazCom). The appropriate Health and Safety (HS) group within the Laboratory provides basic and supervisory training courses. Supervisors will provide job-specific training.

1.7.3 Activated Air

During accelerator operations in Phase 2, the air in the beam tunnel will be activated to a very low level by neutrons generated by proton-in, neutron-out reactions occurring in the beam-accelerator structures or in the beam stop. Activated air will be pulled into the tunnel ventilation system, pass through a pre-filter and a high efficiency particulate air (HEPA) filter, and then be exhausted through the GTA stack. Air emissions from the stack to the atmosphere are governed by Laboratory and DOE regulations. Calculations have shown the maximum expected Potential Effective Equivalent Dose (PEDE) at the sight boundary is far below the EPA threshold that requires periodic confirming measurement. Air activation in the accelerator tunnel will be monitored by the HS Division Group responsible for such activities. The activation measurements will be used to confirm the source term used in the PEDE calculations.

1.7.4 Potentially Activated Water

There are two classes of heat loads in the GTA process-water cooling system: potentially contaminated and uncontaminated. The only source of activation, which could affect the water-cooling system, is the accelerator in the beam tunnel. Potentially contaminated water is defined as any water that directly accesses (cools) beam line optics components or beam stops. Small portable self-contained water chillers will be used in the beam tunnel to cool the beam line optics components and beam stop equipment. The portable self contained water chillers will contain approximately 5 gal of potentially contaminated water. The potentially activated water from these chillers will be monitored, analyzed, and subsequently disposed of properly.

1.7.5 Activated Equipment

During experiments 2D and 3, equipment near the beam line will become radioactive. When discarded, such material is classified as low-level, nontransuranic solid waste. Special handling and separate containers segregate this waste from nonradioactive wastes. The primary source of activation is expected to be the final beam stop which is constructed of graphite and trace impurities and weighs approximately 30 lb. Potentially activated equipment will be monitored for radiation by HS-1 before removal from the beam tunnel. If found to be activated, it will be stored at a designated location within the MPF-365 controlled-area boundary. It will be labeled and packaged in accordance with LANL Administrative Requirement (AR) 10-2, "Low-level Radioactive Solid Waste." The waste coordinator will arrange for transport to TA-54, the Laboratory's radioactive-waste disposal site. Transport vehicles will be of an appropriate type

(e.g., no vans or passenger vehicles) and placarded as specified in the LANL Hazardous Material Transportation Manual which is referenced in AR 10.2.

Appropriate HS or EM groups advise and assist on all aspects of disposing of these waste products.

2.0 SUMMARY/CONCLUSION....1
2.1 Risks Associated with the CCS....1
Table II-1 Matrix of Accident Probability and Hazard Severity Evaluation....3
2.2 Risks from Natural Phenomena....4
2.3 Risks from Normal Operations....4
2.4 Risks from Accidents or Malfunctions....5
2.5 Siting....7
2.6 Impact on, or from, Nearby Facilities....8
2.7 Training....9
2.8 Conclusions....10

Figures and Tables

Fig. 2-1. TA-53 exhaust stack locations....11

Table II-1 Matrix of Accident Probability and Hazard Severity Evaluation....3

2.0 SUMMARY/CONCLUSION

This chapter presents a summary of the possible risks to the employees, plant, public, and environment from natural phenomena, normal operations, and accidents or malfunctions; it also describes the impacts on, and from, nearby facilities. Chapter 7 provides further details of the risks presented here by describing the possible accident scenarios. The GTA is classified as a low-hazard facility, except for the CCS, which is classified as a moderate-hazard facility.

The following sections cover the risks and impacts of the Phase 2 experiments, which include operating the injector, radio frequency quadrupole (RFQ), drift-tube linac (DTL), intertank matching section (IMS), radio-frequency (RF) power, output optics, neutral beam, 40-kW cryogenic-cooling system (CCS), 750-W helium refrigerator, and water-cooling system. The risks and impacts presented here are from natural phenomena, normal operations, and accidents or malfunctions.

2.1 Risks Associated with the CCS

The CCS has been classified as a moderate-hazard facility based on a hazards analysis using a modified Lucas method. This section summarizes the risks and impacts on the public and operating personnel, which are associated with the CCS. The CCS poses negligible risk, or impact, on the environment, because no radioactive or significantly toxic materials are used during its operation, only non-toxic gases/cryogens and a variety of commercial and generic chemicals, lubricants, and solvents are involved. The latter are needed in limited quantities for normal operations and maintenance.

A series of worst-case accidents for the CCS were postulated and analyzed (see Chapter 7). The major hazards of the CCS that were considered in this analysis include: fire and uncontrolled hydrogen release into the atmosphere for the LH_2 subsystem; and asphyxiation, frostbite, and stored energy release for the LN_2 and GHe subsystems. In choosing the worst case accidents to be analyzed, both postulated single-point failures, derived using a systematic failure mode effects analysis (FMEA), and postulated component failures, resulting from human errors or events leading to the defeat of engineered safety systems, were considered.

Postulated accidents that could result in a hydrogen fire or internal combustion include:

- a complete offset break in the LH_2 transfer line during an LH_2 transfer from the LH_2 storage dewar to the run dewar;
- a complete offset break in the LH_2 fill line during the filling of the LH_2 storage dewar;
- a massive rupture of the LH_2 storage dewar or the run dewar;
- a penetration of the LH_2 storage or run dewars by a small projectile; and
- hydrogen/air combustion inside the LH_2 storage dewar or the LH_2 run dewar.

Postulated accidents that could result in a release of unburned hydrogen into the atmosphere include:

- an overflow of LH_2 during a transfer of LH_2 from the LH_2 storage dewar to the run dewar;
- a complete offset break in the GHe circulation line at the GHe/LH_2 heat exchanger, which is inside the LH_2 run dewar; and
- a partial disconnect of the LH_2 fill line during the filling of the LH_2 storage dewar.

Postulated accidents that could result in asphyxiation or frostbite include:

- a break in the GHe circulation line in the beam tunnel; and
- a break in the GHe circulation line or the LN_2 supply line in the equipment room.

A postulated accident that could result in a release of stored energy is a massive rupture of the GHe recovery vessel.

The following conclusions were made from the analysis of these postulated accidents:

- The probability of these accidents occurring range from unlikely to incredible.
- The severity of the hazards involved in these accidents range from negligible to critical; however, the postulated accidents for which the hazard involved is critical are also considered to be incredible or extremely unlikely to occur.
- Burns from a hydrogen fire to the public and operating personnel outside the fenced boundary of the CCS would be less than first degree.
- No flammable cloud from a hydrogen release to the atmosphere would exist beyond the fenced boundary.
- For certain postulated accidents, the possibility of asphyxiation and frostbite hazards exist for a short period of time, but the probability of such accidents occurring is considered extremely unlikely.
- An accidental release of stored energy would result in no direct personal injury to the public or operating personnel outside the fence, but fragments could be a possible source of injury or property damage within the fenced perimeter. The probability of such accidents occurring, however, is extremely unlikely.
- Extra measures have been taken in the design of the CCS and the GTA facility to reduce the probability of any of these accidents occurring and to reduce the hazard if one does occur.
- None of the postulated accidents would result in a release to the environment or exposure of the public or operating personnel to radioactive or toxic materials.

The probability and severity of these accidents is summarized in Table II-1.

Table II-1 Matrix of Accident Probability and Hazard Severity Evaluation

Probability	Severity Category			
	Catastrophic (I)	Critical (II)	Marginal (III)	Negligible (IV)
Likely (A)	None	None	None	None
Unlikely (B)	None	None	None	• Storage Dewar Vacuum Jacket Penetration • Run Dewar Vacuum Jacket Penetration • Combustion Inside Storage Dewar • Combustion Inside Run Dewar
Extremely Unlikely (C)	None	• Fill Line Break	• Transfer Line Break • Massive Rupture of GHe Recovery Vessel	• Run Dewar Overflow • GHe Line Break at He/H_2 Heat Exchanger • GHe Line Break in Beam Tunnel • GHe Line Break in Equipment Room • LN_2 Supply Line Break in Equipment Room
Incredible (D)	None	• Storage Dewar Rupture • Run Dewar Rupture	• Storage Dewar Penetration • Run Dewar Penetration	Not applicable

(See Tables VII-2 and VII-3 for definitions of severity categories and probability ranges)

Many of the postulated accidents analyzed involve human factors. Every effort will be made in the training of operators and in the development of and adherence to standard operating procedures (SOP) to prevent actions that could lead to the defeat of engineered safety systems, and might result in one of the postulated accidents. In addition, where appropriate, redundant safety systems have been provided to avoid potential accidents related to specific possible human errors.

2.2 Risks from Natural Phenomena

The interaction of natural phenomena (such as lightning, wind, snow, and earthquakes) with the Ground Test Accelerator (GTA) facility presents no risks to the public or the environment. Employees within the GTA buildings are protected from lightning because the facility has code-specified lightning protection. However, an employee outside the GTA facility during a lightning storm is at possible risk of being struck, because Los Alamos has a high rate of lightning strikes. The buildings are also protected from other natural phenomena, such as wind, snow, and earthquakes. Code-specified design values that are provided for wind speed, snow load, and earthquake accelerations are not exceeded; hence, there will be no risk to the facility from natural phenomena.

The risks to the public from the interaction of natural phenomena (such as floods, tornadoes, or earthquakes) with the CCS are negligible, because the probability of such events is unlikely. Although the probability of lightning interacting with the CCS is likely, the risks to the public from this interaction is extremely unlikely, because the design of the CCS includes grounding features.

The risks to operating personnel from the interaction of natural phenomena with the CCS are minor injuries; however, operating personnel could be more at risk from the natural phenomena itself than from the interaction of the natural phenomena with the CCS.

2.3 Risks from Normal Operations

One risk to employees from normal GTA operations is exposure to radiation. For example, workers doing maintenance or shop operations on equipment, which may be slightly activated, may become exposed. In addition, employees working in the beam tunnel may be exposed to small amounts of ionizing radiation. There will be some activation of the air in the beam tunnel. A suitable waiting period will be required before entry into the tunnel, so that activation products can be exhausted through the stack. Requirements from the Accelerator Health Protection section of HS-1 and the appropriate SOPs keep doses as low as reasonably achievable (ALARA). Local shielding, access control into exposure areas, and radiation monitoring during operations minimize the risk. HS-1 personnel will be called to check radiation and contamination levels prior to maintenance activities on the accelerator and its components. Appropriate levels of anti-C clothing and respiratory protection will be prescribed by HS-1 personnel at the time.

Electrons driven by the RF fields in the klystrons and accelerator produce x rays. Shielding for klystrons and accelerator components will be designed and placed as necessary to deal with changes in configuration of klystrons, activation of beam line components, and other situations where x rays occur around RF vessels. This shielding is adequate for operations, accidents, or malfunctions (see Appendix U).

Another risk to employees is electrical shock. Testing and maintaining high-voltage equipment could result in severe shock or electrocution. SOPs, training, and engineered safeguards, however, minimize that risk.

Normal operations for Phase 2 do not cause damage to, or deterioration of, the plant or pose a threat to the environment. The probability of a radiation accident or electrocution occurring is extremely unlikely.

The risks to the public from the normal operation of the CCS are negligible, because the CCS is in an enclosed area that excludes the public from direct contact with CCS components, and the normal operation of the CCS does not result in any radioactive or toxic emissions. Risks to operating personnel from the normal operation of the CCS are negligible because the operation of the CCS does not use, generate, or emit any radioactive or toxic materials. Operating personnel will be exposed only to risks that are usually associated with the operation of electrical equipment, rotating machinery, and pressurized systems.

The noise level in the cryo equipment room when the CCS is operating will be assessed against the Los Alamos National Laboratory (LANL) threshold of 80 dBA, which is more restrictive than the Occupational Safety and Hazard Act (OSHA) threshold of 90 dBA. The noise level is not expected to exceed 80 dBA, based on information obtained from CVI, Inc., the company that designed and built the CCS. Hearing protection is required when working in the cryogenic equipment room with the compressors running. A noise survey recorded a level of 81 dBA which meets OSHA standards but exceeds the Los Alamos National Laboratory standard of 80 dBA.

2.4 Risks from Accidents or Malfunctions

No accidents or malfunctions of GTA, which may occur during Phase 2 operations, present a risk to the public. Employees, however, may be at some risk.

One risk is personnel exposure to radiation. A combination of human error (for example, ignoring a warning horn, a public-address system announcement, illuminated signs, flashing red lights, and a second warning horn) and failure of the two-person sweep team to find the employee during the personnel clearance sweep could result in a person's exposure to high-radiation levels. The radiation would consist of prompt neutron and gamma radiation from beam impingement on accelerator structures and x-rays induced by RF

fields in the cavities. Radiation personnel safety system (RPSS) design and testing will ensure that the probability of this accident occurring is extremely low. Barriers controlled by the RPSS prevent inadvertent entry to the exclusion area during RF or beam operation. Neutron detectors positioned outside the exclusion area will trip the RPSS and shut off the beam if neutron dose rates exceed preset levels.

The hydrogen cylinder (20 ft^3 STP) used with the injector could create a fire-and-burn hazard if opened accidentally but access is restricted, and it is handled only by experienced technicians. Given the tunnel volume and ventilation rate, it does not present a credible fire or explosion hazard.

Another risk to employees concerns the direct current (dc) high-voltage power for the RF systems. A failure of the RF high-voltage safety system and an employee's disregard of warning lights could result in the employee's injury or death from electrocution. The hazard of personnel injury is mitigated by access interlocks, automatic shorting of capacitors, and administrative requirements listed in the Tetrode and Klystron/Klystrode SOPs. In addition, the protective systems will be tested periodically; and operators receive training in the proper handling and operation of the high-voltage systems.

There is a possible risk to employees from exposure to microwave radiation from the RF systems if the transmission lines or waveguides are left open or improperly sealed. The use of pressurized transmission lines reduces this hazard. SOPs also entail checking for microwave leakage after maintenance work; waveguides and coaxial lines are required to be blanked off if they are not in their normal configuration. Monitoring for microwave leakage is routinely done at the start of experimental runs by HS personnel.

Two other risks deal with nitrogen and helium: A massive leak in the facility's nitrogen system could temporarily reduce the local oxygen concentration in the beam tunnel enough so that a person could be asphyxiated; and the cryogenic cooling refrigerator, which uses helium and nitrogen at cryogenic temperatures, could possibly leak LN_2, causing local oxygen depletion. A GHe leak from CCS lines could also cause an oxygen depletion. Fixed oxygen monitors are installed in the beam tunnel and in the CCS equipment room to warn of impending oxygen depletion. Cryogens could also cause severe, but local, skin burns to employees. This hazard is mitigated, however, by double-walled (vacuum-jacket insulation) lines, careful choice of materials for cryogenic use, and provisions for thermal expansion and contraction. Employee training further lessens these hazards.

Installed and mobile cranes can also pose a risk to employees. The cranes are used to handle heavy components and shield blocks. Careless crane operation or malfunction could seriously injure an employee. To prevent this from occurring, crane operators are trained and certified. In addition, crane and lifting equipment

is load-rated and annually inspected. Personnel in the immediate lift area are limited to those involved in the lift and assembly operation.

Another risk to employees deals with exposure to chemicals such as solvents, oils, fumes, vapors, gases, and dusts during routine and nonroutine lab and shop activities. An up-to-date inventory of hazardous materials is kept as well as a material safety data sheet (MSDS) for each chemical listed. Supervisors provide job-specific training for those employees handling or using these chemicals.

The possibility of a flood from the process water-cooling system is addressed in Chapter 7. The system contains a limited amount of water, so a flood from this source is not expected to cause equipment damage or significant downtime. Flooding from a water main break should not occur, because the terrain outside the building would drain water away from the building.

The infrequency of local airplane flights, especially by anything other than single-engine light planes, would make an aircraft crash at GTA extremely unlikely. The probability of an airplane crashing onto the CCS LH_2 storage or run dewars has been analyzed and determined to be so small ($<10^{-6}$ per year) that such an event is not considered to be credible.

The conclusion resulting from the analysis of these postulated accidents is that, at most, the public is at risk of receiving minor injuries from these accidents. Risks to operating personnel from the postulated accidents vary from none to serious injury or death of a worker.

It is extremely unlikely that serious injury or death would result from an accident or malfunction involving the GTA experiment or facility.

2.5 Siting

A major GTA siting consideration was the location of the CCS 28,000-gal LH_2 storage dewar. Its location was chosen to be as far as possible from La Mesita and Alvarez roads, which were then open to the public, and from the LAMPF and GTA buildings. Consequently, the dewar is at least 200 ft from La Mesita Rd., and the distance from the dewar to the LAMPF and GTA buildings is considerably greater. The site plan for the CCS is shown in Fig. 3-4. This distance of 200 ft is sufficient to protect people outside the CCS boundary fence from injury that could result from the postulated accidents. The 200-ft distance to La Mesita Rd. is also greater than the public exclusion distance of 75 ft required by National Fire Protection Association (NFPA) 50B, which covers siting of LH_2 storage tanks.

A recent Laboratory-management decision has been implemented to control site access beyond the guard station on La Mesita Rd. at the entrance to TA-53 (LAMPF, GTA, etc.). With this access control now operating, La Mesita and Alvarez roads are open only to site-related traffic and the nearest public exposure to the CCS is on East Jemez Rd., which is approximately 800 ft from the LH_2 storage dewar at its nearest point, and approximately 200 ft lower in elevation. The nearest site-related personnel exposure outside the CCS boundary fence remains on La Mesita Rd.

Both industrial and government siting practices for LH_2 storage tanks were considered when the site for the LH_2 dewar was chosen. The final location of the LH_2 storage dewar was based on the use conditions of LH_2 and the CCS, which are comparable to those of industrial use and storage. The use conditions for LH_2 during GTA operations include storage, transfer from one tank to another (at near atmospheric pressure), evaporation by heat leak and/or heat transfer from the circulating GHe, and venting and/or flaring. The use conditions do not involve high pressures, high-flow rates, or combustion with an oxidizer, which are typical use conditions at the National Aeronautics and Space Administration (NASA) facilities. Because of the nature of the NASA facilities and use conditions of LH_2, larger separation distances than those chosen for the CCS are needed.

The 4,050-gal LH_2 run dewar was also sited according to NFPA 50B. It is located 50 ft from La Mesita Rd. and 5 ft from the GTA building and CCS equipment room, because of the need to have the run dewar as close as possible to the GHe circulation subsystem. As a result of this smaller distance, the LH_2 volume in the run dewar will be minimized. LH_2 will be transferred to the run dewar only when the accelerator is being tested; otherwise the dewar and transfer line will be empty of LH_2.

2.6 Impact on, or from, Nearby Facilities

Facilities at TA-53 that may have an impact on, or from, GTA are

- the AT Division facilities;
- the Clinton P. Anderson Meson Physics Facility (LAMPF);
- the Manuel Lujan, Jr. Neutron Scattering Center (LANSCE);
- the Weapons Neutron Research (WNR) facility; and
- the Proton Storage Ring (PSR).

The most likely impact of one TA-53 facility on another is an electrical fault at one location, which would cause a loss of electrical power to all, or part, of the technical area. A loss of power might interrupt operations. During Phase 2, GTA will produce activated air but will pose no credible hazards to other facilities at TA-53.

Operations at LAMPF may have an impact on GTA. LAMPF is an 800-MeV accelerator built primarily for producing mesons. It operates four months each year during the summer. Radioactive air in the target area exhausts from a stack about 1,200 ft east from GTA. Certain wind conditions could cause the GTA site to be irradiated by the LAMPF stack exhaust. During summer, installations downwind, to the north and east, of the stack receive potential occupational exposure of some 15 mrem per month from stack release. The 15 mrem is accumulated during 1 month assuming operation is for 24 hr each day over 30 days. Figure 2-1 shows the LAMPF and GTA exhaust stacks at TA-53. LAMPF stack emissions at TA-53 have decreased due to a modification to a target area at LAMPF. However, there has been no recorded exposure to GTA personnel from LAMPF stack emissions. It is not expected that any exposures will occur that will violate DOE 5480.11 criteria (DOE, 1988).

Other than LAMPF stack emissions, LAMPF, LANSCE, and WNR operations pose no foreseeable hazards to GTA. Experiments conducted at LAMPF, LANSCE, and WNR change and are not known more than a year in advance, so the hazards of future experiments cannot be evaluated. Before an experiment in any of the three facilities begins, however, a hazards analysis must be prepared, reviewed, and approved by safety personnel and facility management.

LAMPF is the major contributor to air doses during GTA operations. For 1993 and beyond, the air doses will be less than 10 mrem/yr. Air emissions from GTA are calculated to be well under 0.001 mrem/yr at the site boundary.

The facilities that are closest to the CCS are building MPF-365 and LAMPF. These facilities are not expected to have an impact on the CCS other than the possible interruption of utilities and the possible exposure to low-level radioactive emissions, which have already been discussed.

The primary impact of the CCS on nearby facilities is a release of hydrogen that could migrate off-site and then ignite. The design of the CCS addresses this situation by including a vent stack that flares the release of hydrogen from the run dewar. This flaring prevents a flammable cloud that might migrate beyond the fence around the CCS. The distance of the storage dewar from the fence, combined with the release rates of vented hydrogen from the dewar for all phases of operation, does not allow for a combustible cloud to travel beyond the fence.

2.7 Training

Many of the GTA operations require employee training for proper and/or safe operation. Chapter 16 covers the training program for GTA.

2.8 Conclusions

This report is an assessment of the safety of GTA Phase 2 experiments. The analysis indicates that operations can be conducted with acceptably low risks to the public, employees, plant, and environment.

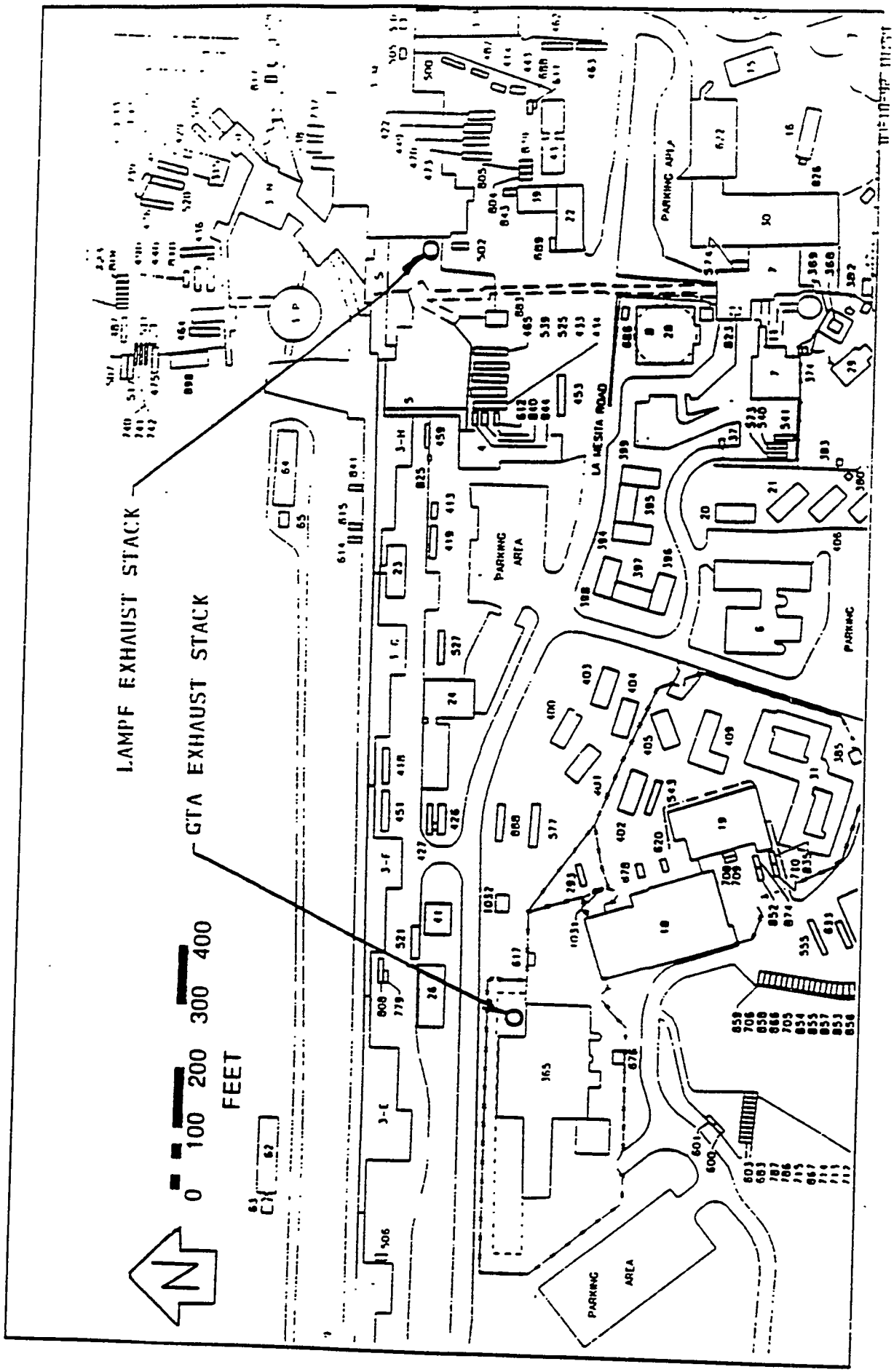

Fig. 2-1. TA-53 exhaust stack locations.

3.0 SITE DESCRIPTION AND ASSESSMENT 1
3.1 Geographic Setting and Land Use 1
3.1.1 GTA Site 4
3.1.1.1 Cryogenic-cooling System (CCS) Site 4
3.2 Geology and Seismology 9
3.2.1 Site-specific Geology and Seismology 9
3.3 Hydrology 12
3.3.1 Site-specific Hydrology 13
3.4 Climatology and Meteorology 13
3.4.1 Site-specific Climatology and Meteorology 14
3.5 Population Distribution 17
3.5.1 Site-specific Population 17
3.6 Ecological Features 18
3.6.1 Site-specific Ecology 18

Figures and Tables

Fig. 3-1. Location of Los Alamos National Laboratory. 2
Fig. 3-2. Location of the GTA in Los Alamos County 3
Fig. 3-3. Location of GTA at AT Division. 5
Fig. 3-4. CCS site. 6
Fig. 3-5. Geology of the Los Alamos, NM area. 10
Fig. 3-6. Earthquake hazard at Los Alamos, NM. 11
Fig. 3-7. Wind rose for the Mesatop Technical Area (TA-50) 15
Fig. 3-8. Wind hazard at Los Alamos National Laboratory. 16

Table III-1 1990 Population Within 80 km of Los Alamos 17

3.0 SITE DESCRIPTION AND ASSESSMENT

This chapter includes a brief summary of the environmental setting of Los Alamos National Laboratory (LANL) and additional details of the immediate vicinity of the Ground Test Accelerator (GTA) site. The purpose of this chapter is to emphasize the aspects relevant to performing and understanding the safety analysis of this facility. Additional environmental information is available in the Environmental Impact Statement for Los Alamos; annual reports on environmental surveillance (the most recent is LA-11271-MS); and the numerous references cited in those documents.

3.1 Geographic Setting and Land Use

LANL and the residential areas of Los Alamos and White Rock are in Los Alamos County, which is in north-central New Mexico. Los Alamos is ~60 mi north-northeast of Albuquerque, 25 mi northwest of Santa Fe, and 20 mi southwest of Espanola. Figure 3-1 shows the location of the Laboratory within New Mexico. The 43-mi^2 Laboratory site and adjacent communities are situated on the Pajarito Plateau. The plateau consists of a series of fingerlike mesas separated by deep east/west-oriented canyons that are cut by intermittent streams. Mesa tops range in elevation from ~7,800 ft on the flank of the Jemez Mountains to ~6,200 ft at the eastern end above the Rio Grande Valley.

Most Laboratory and community developments are confined to mesa tops. The surrounding land is largely undeveloped. Large tracts north, west, and south of LANL are held by the Santa Fe National Forest, the U.S. Bureau of Land Management, Bandelier National Monument, General Services Administration, and Los Alamos County. San Ildefonso Pueblo borders the Laboratory to the east.

Laboratory land is used for building sites, test areas, waste-disposal areas, roads and parking, and utility rights-of-way. These uses, however, account for only a small fraction of the total land area. Present land use is ~1,400 acres of the total 24,000 acres. The developed area is divided into 30 active technical areas (TA) within Los Alamos County. Figure 3-2 shows the location of the TA for the GTA within the county. Most land provides isolation for security and safety and is a reserve for the future locations of structures.

Laboratory lands contain ~900 known archaeological and historical sites. Numerous laws and regulations mandate the protection of cultural resources. Before any building begins, Laboratory archaeologists survey construction sites to determine the presence of cultural resources. Because of the federal regulations implementing Section 106 of the National Historic Preservation Act of 1966 (as amended), consulting with the New Mexico State Historical Preservation Office is necessary to determine clearance for construction and for

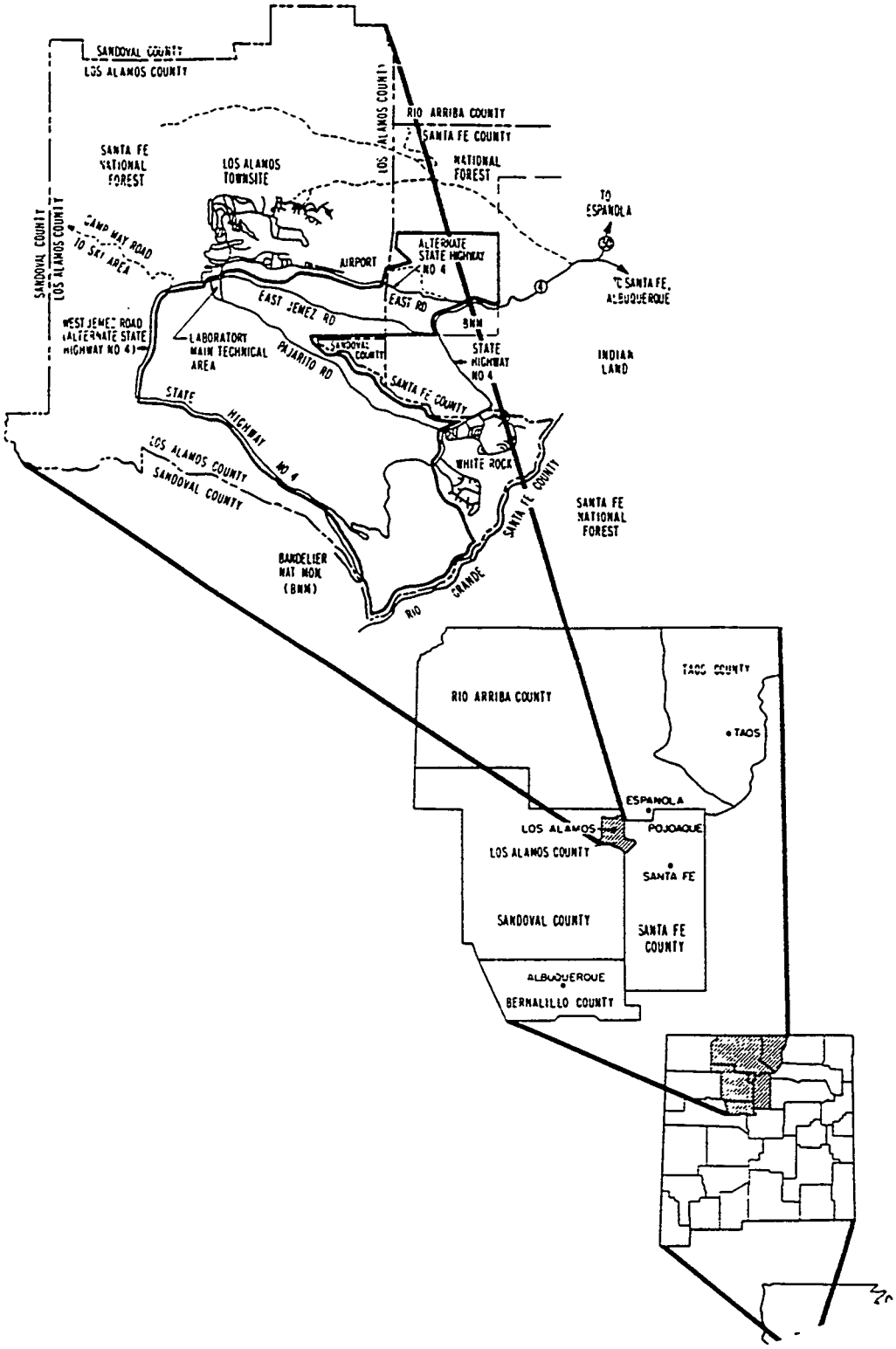

Fig..3-1. Location of Los Alamos National Laboratory.

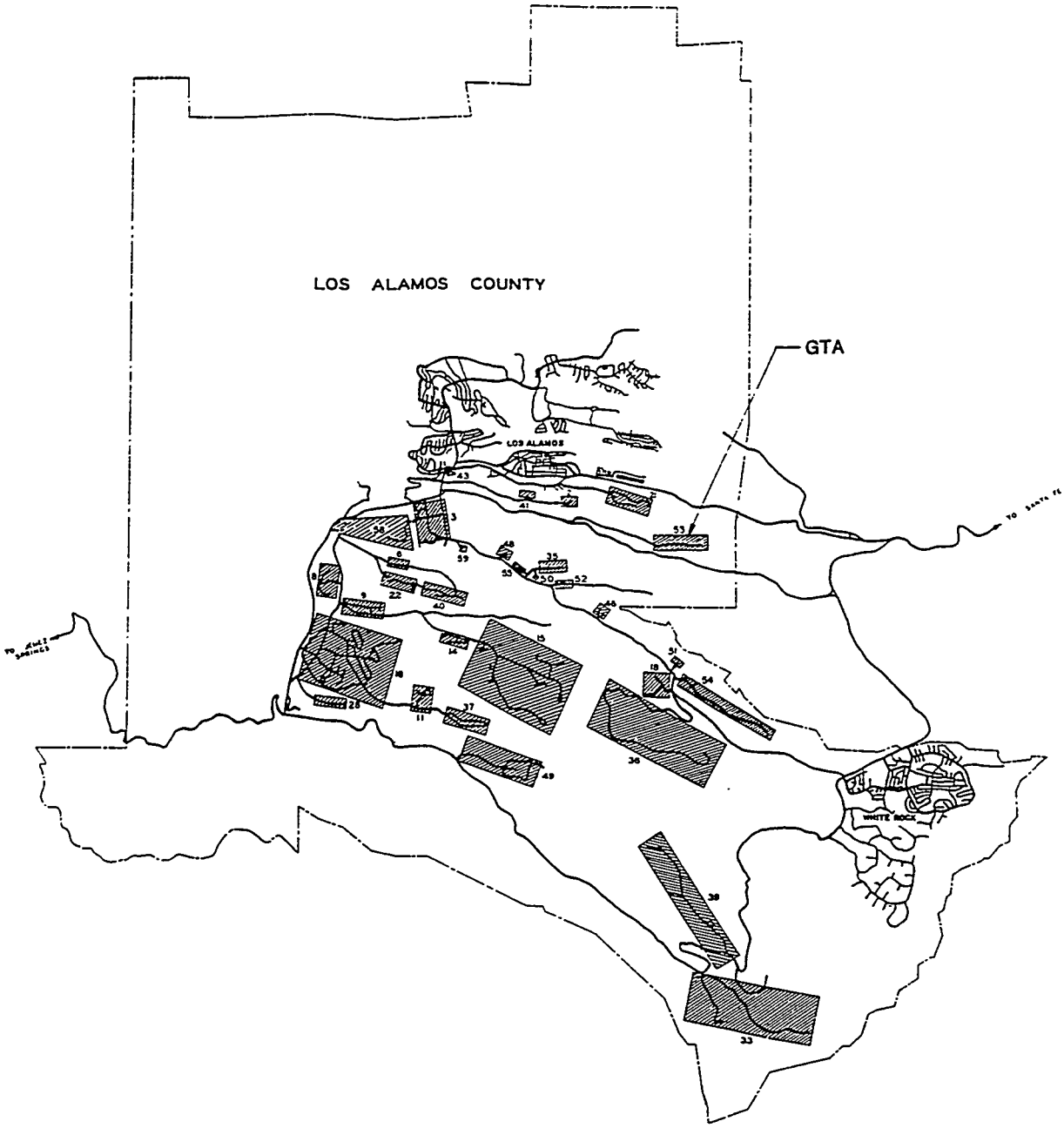

Fig. 3-2. Location of the GTA in Los Alamos County.

mitigating unavoidable impact on cultural resources. If adverse-impact mitigation is required, consultation with the National Advisory Council for Historic Preservation is necessary.

The U.S. Department of Energy (DOE) controls the area within the Laboratory boundary and, if necessary, has the option to completely restrict access. Public access is limited in certain areas of the Laboratory, but some roads within the Laboratory boundary are open to the public. An area north of Ancho Canyon between the Rio Grande and State Rd. 4 is open to hikers, rafters, and hunters; vehicles and woodcutting, however, are prohibited. Portions of Mortandad, Water, and Pueblo canyons are also open to the public.

3.1.1 GTA Site

The GTA site is within TA-53 at the Accelerator Technology (AT) Division. Figure 3-3 shows the location of GTA at AT Division. East Jemez Rd. provides access to the site; DOE can close the road if necessary. The single entrance to TA-53 has a manned gate that is open 24 hr/day. The GTA site is a fenced security area and entry is controlled. A prehistoric ruin west of the site has been fenced to protect it from the GTA construction. Before construction began, the Laboratory's Health, Safety, and Environment (HSE) Division examined the site. The division found no evidence of prior use or of site contamination, which would have an impact on GTA's use of the site. The site mainly contained juniper and pinon trees. Appendix A contains a copy of the site's environmental assessment.

The nearest Laboratory boundary is 1,000 m to the north of the AT Division facilities. The separation and protection provided for neighboring facilities makes them unlikely to be affected by a fire at GTA or vice versa. In later GTA experiments (see Table I-1), hydrogen (H_2) and the dispersion of radioactive air could interact with other facilities.

3.1.1.1 Cryogenic-cooling System (CCS) Site - Figure 3-4 shows the site plan for the CCS. The major features shown, which are described in Chapter 4, are the:

- LH_2 storage dewar and unloading area;
- gaseous helium (GHe) and gaseous nitrogen (GN_2) high-pressure tube trailers;
- LH_2 transfer line between the LH_2 storage and run dewars;
- LN_2 storage dewar;
- helium storage and recovery tank;
- LH_2 run dewar and flare stack;

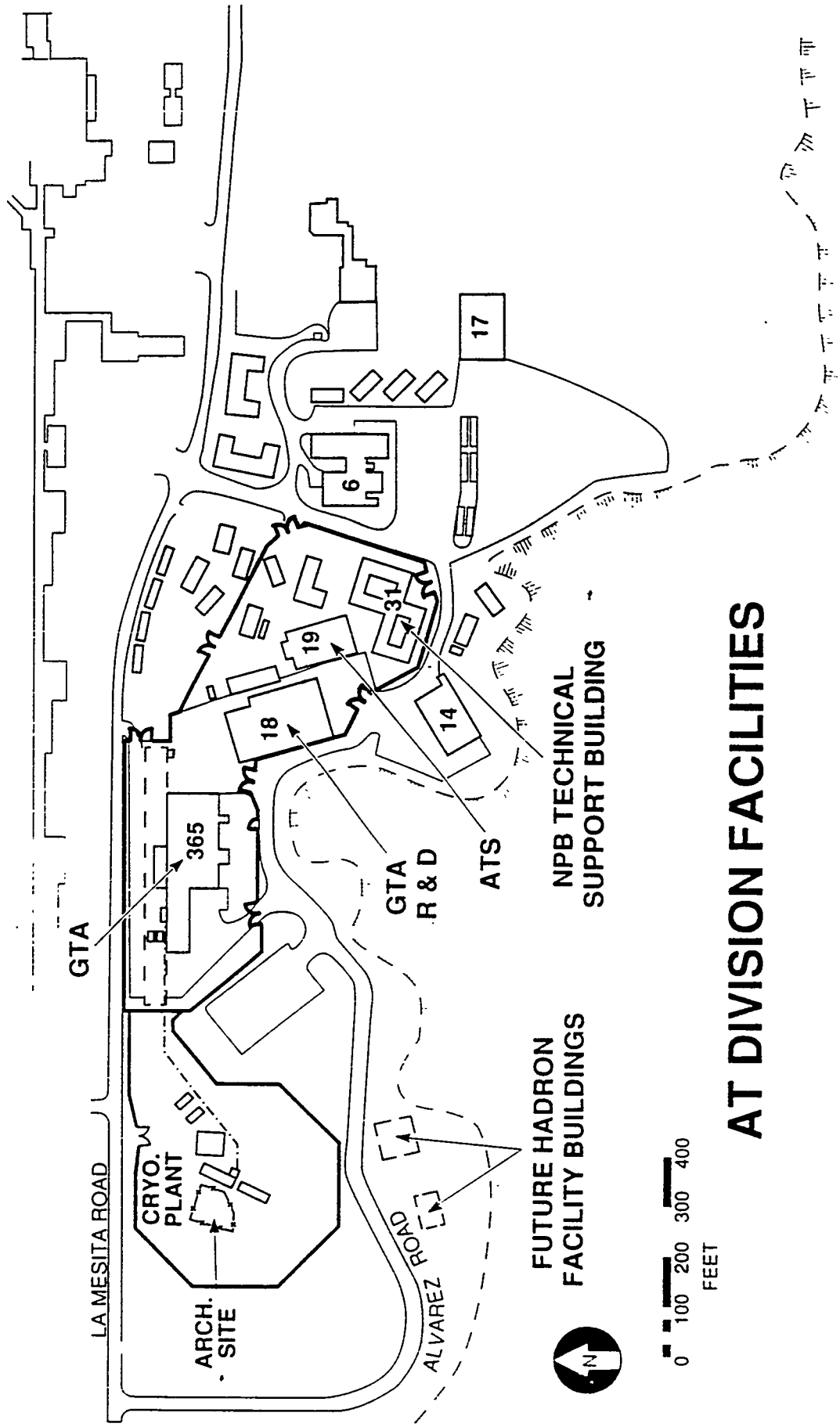

Fig. 3-3. Location of GTA at AT Division.

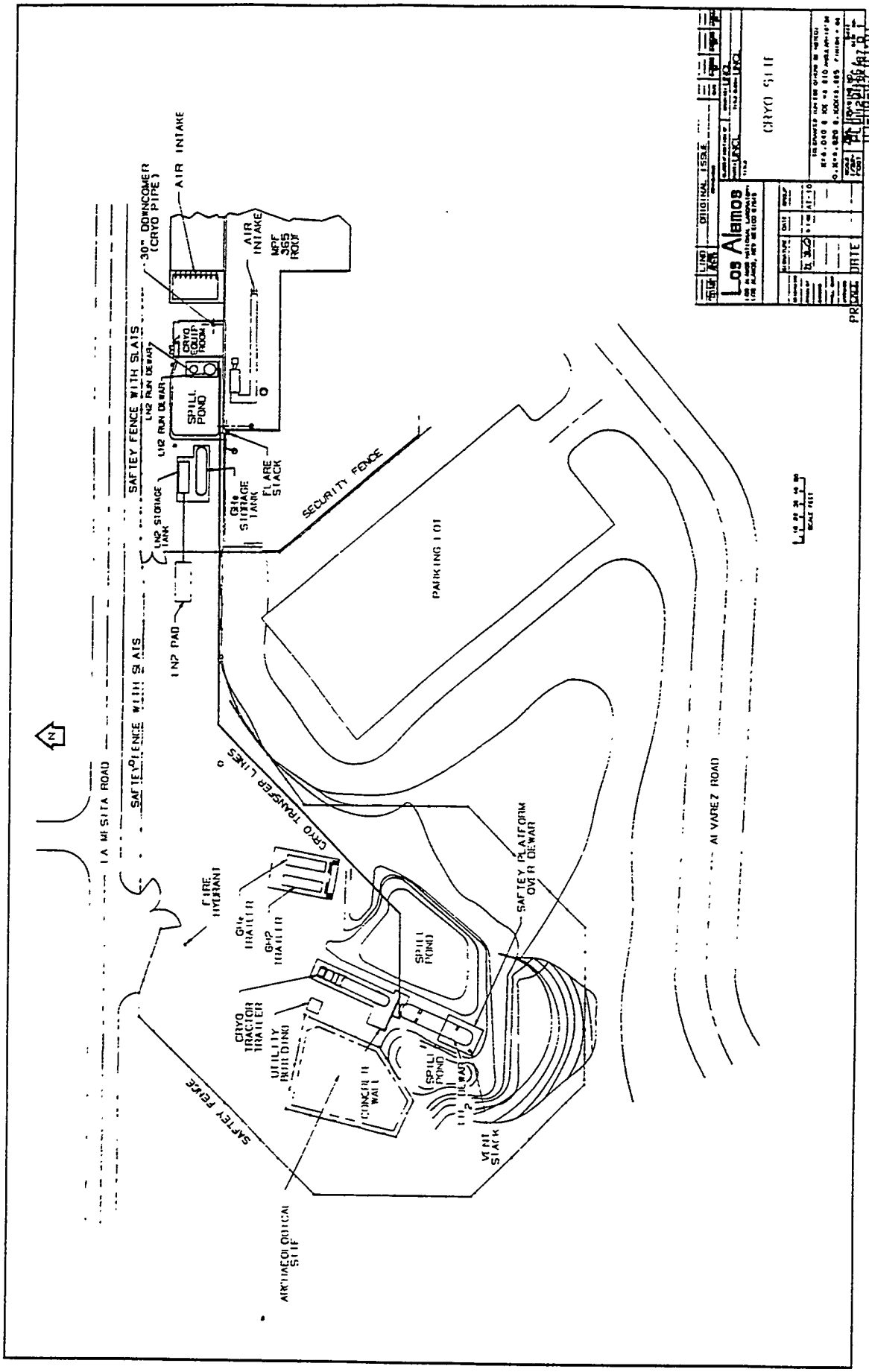

Fig. 3-4. CCS site.

- LN_2 run dewar; and
- equipment room.

One of the principal technical criteria established by the Strategic Defense Initiative Office for GTA is to cool the accelerator to LH_2 temperature (~20 K) in order to benefit from the large reduction in electrical resistivity and radio-frequency (RF) power loss attained from operating at this temperature, as required for space-based neutral particle beam applications. The CCS makes use of LH_2 at near ambient pressure conditions, (~3 psig), as the primary refrigerant. The LH_2 is stored in a 28,000-gal dewar and transferred, for GTA test operations, to a 4,050-gal LH_2 run dewar containing an LH_2/He heat exchanger, which cools a circulating flow of GHe that runs through and cools the GTA. There is limited space available near the GTA building, so the siting of the LH_2 storage vessels has been given careful consideration and study in the safety analysis and review process of the CCS design.

The locations of the LH_2 vessels are as far as possible from La Mesita Rd. and from the Clinton P. Anderson Meson Physics Facility (LAMPF) as allowed by the geography of the GTA site and by the technical specifications of the CCS, which require the LH_2 run dewar to be as close as possible to the helium-coolant subsystem. The chosen locations meet, or exceed, the exclusion distances of the National Fire Protection Association (NFPA) 50B standards, which are required by the Laboratory. The minimum exclusion distance from La Mesita Rd. and building MPF-365 for the 28,000-gal LH_2 storage dewar is 200 ft, which is 125 ft greater than the NFPA 50B requirement of 75 ft. The minimum exclusion distance from La Mesita Rd. for the 4,050-gal LH_2 run dewar is 50 ft, and it is 5 ft from building MPF-365; both distances meet the NFPA 50B requirement.

DOE Order 6430.1A does not have criteria for siting LH_2 storage vessels, so both industrial and government siting practices for LH_2 installations have been reviewed for their applicability to the CCS. The use conditions for the CCS are comparable to those of industry and are typical of installations provided by companies such as Air Products. Air Products uses the NFPA 50B standards when siting its storage vessels. Air Products is the largest producer of LH_2 in the country and has the most experience in handling and storing the cryogen under conditions similar to those planned for the CCS.

The National Aeronautic and Space Administration (NASA) and the Air Force, however, have different criteria for siting LH_2 storage vessels at test sites when LH_2 is used as a rocket propellant. These criteria were evaluated to see whether they apply to the CCS use conditions. The exclusion distances in these criteria are greater than those of NFPA 50B and cover a broader spectrum of potential hazards and use conditions than those planned for the CCS. The use conditions for NASA and the Air Force include the storage and pumping of LH_2 at elevated pressures and the proximity of the storage vessels to test stands, where liquid oxygen and other oxidizers are also handled and where the possibility of explosive tank rupture and flying fragments may exist. The probability of such an accident occurring is not considered in the NASA and Air Force criteria. None of the worst case accidents postulated for the CCS that are analyzed in Chapter 7 would result in explosive rupture of the LH_2 storage vessels. Further, because of the system design and safety devices, the conditions required for a boiling liquid expanding vapor explosion (BLEVE) were not found to exist from any of the failure modes analyzed, and a BLEVE is not considered to be a credible event for the CCS. NASA and Air Force siting criteria were, therefore, considered unnecessary for the CCS.

The safety aspects of the CCS site were reviewed by an independent group of experts in the field of cryogenic engineering and technology under the leadership of Dr. Keith Boyer. (See Appendix S.) As a result of the group's recommendations, a number of additional safety features related to the CCS's siting were incorporated into the original design developed by CVI, the CCS contractor. These features include:

- physical barriers along La Mesita Rd. and along the LH_2 transfer line to protect the LH_2 system from accidental vehicular damage;
- a thermal radiation barrier at the CCS site boundary along La Mesita Rd. to protect personnel from possible skin burns caused by an accidental release of hydrogen and subsequent fire;
- a flare on the run dewar vent stack to prevent dispersion of hydrogen beyond the site boundary;
- a remote shut-off valve in the LH_2 fill line;
- TV surveillance of the CCS site and major components; and
- a procedural control that limits the amount of LH_2 in the run dewar to 1,500 gal rather than its maximum capacity of 4,050 gal.

These and other CCS safety features are described in more detail in Chapter 4.

In summary, the safety analysis of the CCS, including the postulated worst-case accidents, has shown that the hazards to the public, to site-related personnel, and to LAMPF are negligible and the siting selected presents an acceptable risk.

3.2 Geology and Seismology

Figure 3-5 shows the geology of the Los Alamos area. Most of the fingerlike mesas in the Laboratory area are found in Bandelier tuff. Ashfall, ashfall pumice, and rhyolitic tuff form the surface of Pajarito Plateau. The tuff, ranging from nonwelded to welded, is more than 1,000 ft thick in the western part of Pajarito Plateau and thins to ~260 ft toward the eastern end above the Rio Grande. The tuff was deposited after a major volcanic eruption in the western Jemez Mountains 1.1 to 1.4 million yr ago.

The tuffs overlap onto older volcanic deposits of the Tschicoma Formation, which forms the Jemez Mountains along the western edge of the plateau. They are underlain by the conglomerate of the Puye Formation in the central region and eastern edge along the Rio Grande. Chino Mesa basalts interfinger with the conglomerate along the river. These formations overlie the sediments of the Tesuque Formation, which extends across the Rio Grande Valley and is more than 3,300 ft thick.

The Laboratory is on the western edge of the Rio Grande Rift. Seismic activity within 70 mi of Los Alamos is low. Only one earthquake of magnitude 5.5 on the Richter scale is known to have occurred in the vicinity of Los Alamos within the past 150 yr. Figure 3-6 shows the magnitude of an earthquake at Los Alamos for a given return period.

To withstand earthquake damage, structural design at Los Alamos may be based on one of two approaches, depending on the importance of the facility: the Uniform Building Code (UBC) or the local design specifications. "Local design specifications" refers to LANL ENG standards that are imposed on a contract A-E firm to ensure commonality throughout the complex. The Laboratory has developed standards to minimize maintenance, and the likelihood of failure, and to increase the safety for configuration and systems. Laboratory standards meet or exceed the applicable industrial or governmental codes. Los Alamos lies at the boundary between zones 1 and 2 of the UBC; ordinary design is based on the more restrictive Zone 2 criteria.

3.2.1 Site-specific Geology and Seismology

The GTA site is on a shelf on the south side of the TA-53 mesa. The ground floor is ~50 ft below the mesa top and 100 ft above the canyon floor. Concrete foundations were poured on undisturbed welded volcanic tuff. There are no known faults near the site. The terrain allowed for a relatively simple drainage design.

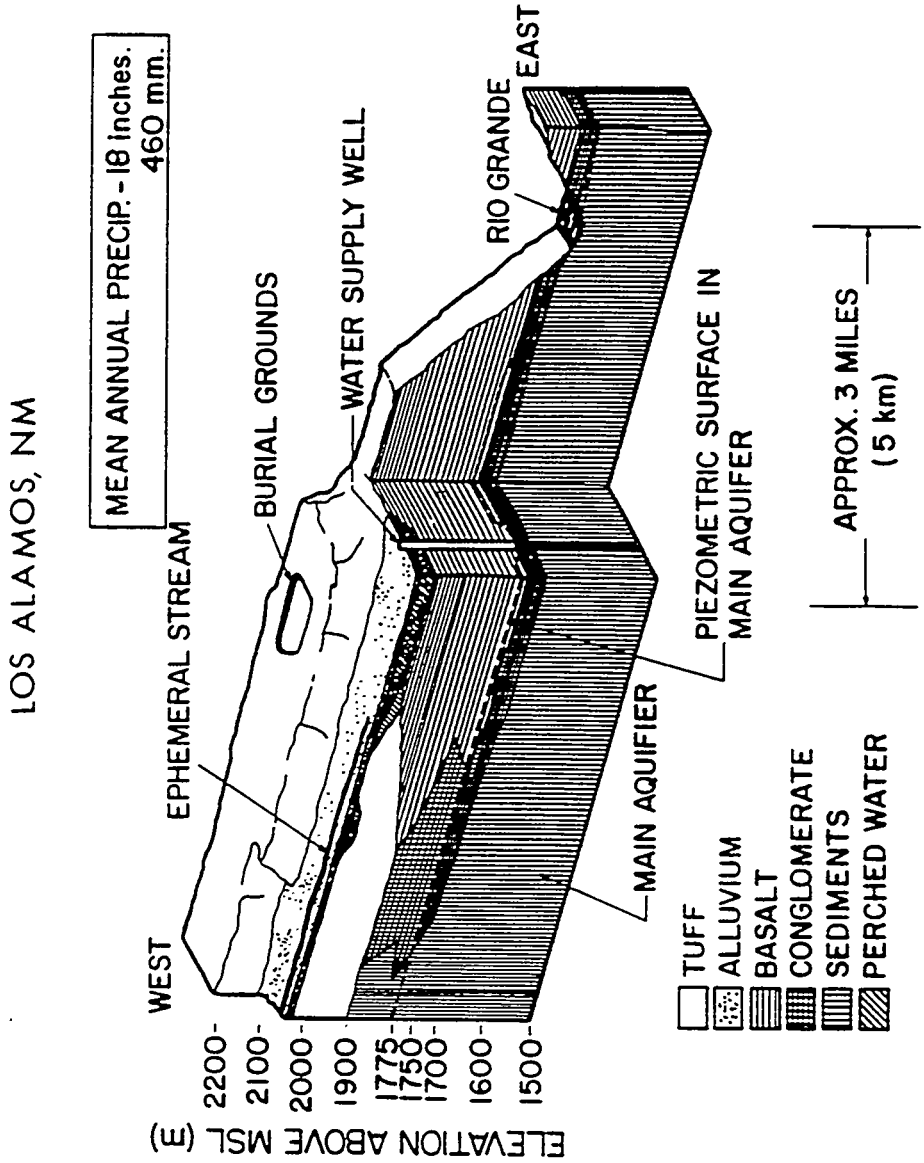

Fig. 3-5. Geology of the Los Alamos, NM area.

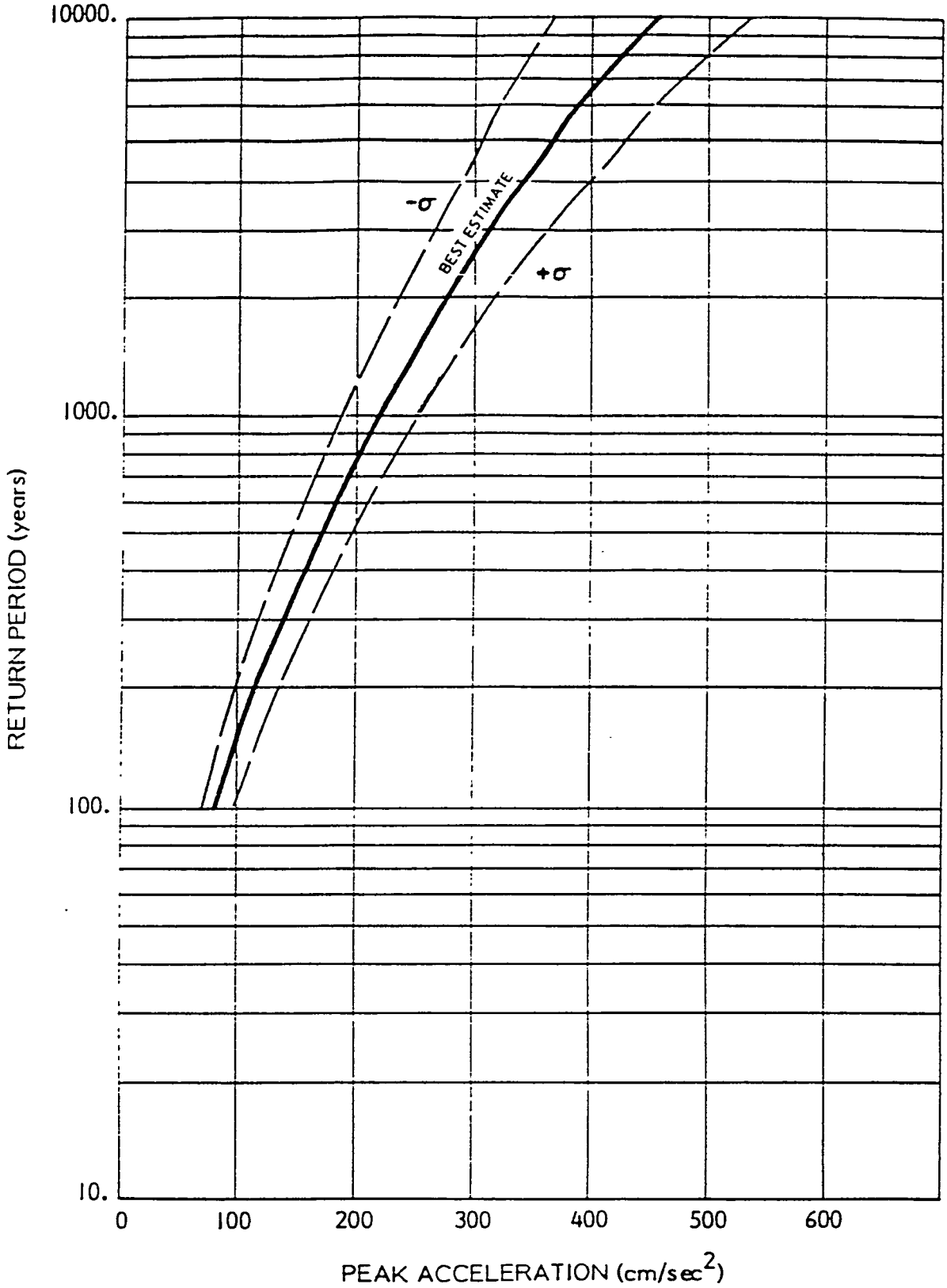

Fig. 3-6. Earthquake hazard at Los Alamos, NM.

The seismic loading for buildings and structures conforms to Section 2312 of the UBC (UBC, 1985) and DOE Order 6430.1. Holmes & Narver, the architecture-engineer for the building, compared the seismic loading requirements of DOE Order 6430.1, which were applied to building MPF-365, with those of DOE Order 6430.1A. Appendix B and Section 4.1.1 contain further discussion of the comparison. The structures for the CCS, a moderate-hazard facility, were designed according to DOE Order 6430.1 and to University of California Research Laboratory (UCRL) 15910 for maximum horizontal ground-surface accelerations of 0.22 g. The return period for earthquakes for moderate hazard facilities is 1,000 yr, which is in accordance with UCRL specifications for lateral force.

3.3 Hydrology

Surface water of the Los Alamos area generally occurs as intermittent streams. Springs on the flanks of the Jemez Mountains supply base flow into the upper reaches of some canyons; the amount, however, is insufficient to maintain surface flows across the Laboratory site before being depleted by evaporation, transpiration, and infiltration. Run-off from heavy thunderstorms or heavy-snow melt reaches the Rio Grande several times a year. Sufficient effluents from sanitary sewage, industrial-waste treatment plants, and cooling tower blowdown are released to some canyons at rates that maintain surface flows for about 1 mi.

In the Los Alamos area, groundwater occurs in two principal modes: water in shallow alluvium in canyons and the main aquifer of the Los Alamos area, which is shown in Fig. 3-5.

Most canyons on the plateau have alluvial deposits that range from less than 3 ft to as much as 100 ft in thickness. In contrast to the underlying volcanic tuff and sediments, the alluvium is quite permeable. Intermittent run-off in canyons infiltrates the alluvium until its downward movement is impeded by the less permeable tuff and volcanic sediment, resulting in a body of shallow alluvial groundwater that moves down gradient in the alluvium. As water in the alluvium moves down gradient, it is depleted by evapotranspiration and movement into underlying volcanics.

The main aquifer of Los Alamos is the only aquifer in the area that can serve as a municipal water supply. The DOE operates three wellfields that supply the Laboratory and county with water from this aquifer. The surface of the aquifer rises westward from the Rio Grande within the Tesuque Formation and falls into the lower part of the Puye Formation beneath the central and western portions of the plateau. The depth of the aquifer decreases from 1,200 ft along the western margin of the plateau to ~600 ft at the eastern edge. The main aquifer is isolated from alluvial and perched waters by 350 to 620 ft of dry tuff and volcanic sediments.

Therefore, little hydrologic connection or potential for recharge to the main aquifer from alluvial or perched water exists.

3.3.1 Site-specific Hydrology

Surface drainage is southward into a small side canyon of Sandia Canyon. No liquid effluents, except water from the landscape-irrigation system and cooling tower blowdown, will be released routinely to the surface drainage. The only potentially radioactive liquid at the site is cooling water used in the beam tunnel. GTA has the capability to contain potentially radioactive liquid, pump it to a tank for monitoring and analysis, and subsequently dispose of it properly.

Flooding of the site is virtually impossible, because the drainage area for the site is small and no impounded water exists above the site. The depth to the main aquifer is ~900 ft.

3.4 Climatology and Meteorology

Los Alamos has a semiarid, temperate mountain climate. Average annual precipitation is nearly 18 in. Forty percent of the annual precipitation occurs as thundershowers during July and August. The rest of the precipitation occurs when winter storms move through New Mexico. Winter precipitation falls primarily as snow, with an annual total of about 51 in.

Summers are generally sunny with moderately warm days and cool nights. Maximum temperatures are usually below 90° F. Brief afternoon and evening thundershowers are common, especially in July and August. High altitude, light winds, clear skies, and a dry atmosphere cause night temperatures to drop below 59° F even after the warmest day. Winter temperatures range from about 15 to 25° F during the night and from 30 to 50° F during the day. Many winter days are clear with light winds, so strong sunshine can make conditions quite comfortable even when air temperatures are cold. Snowstorms with accumulations exceeding 4 in. are common in Los Alamos.

Due to complex terrain, surface winds in Los Alamos often vary dramatically with the time of day and location. Because of light, large-scaled winds and clear skies, a distinct, daily wind cycle often exists: a light southeastern to southern upslope wind during the day; and a light western to northwestern drainage wind at night. In contrast, several miles to the east toward the edge of Pajarito Plateau, near the Rio Grande Valley, a different daily wind cycle is common: a moderate southwestern up-valley wind during the day, and either a light northwestern to northern drainage wind or a moderate southwestern wind at the night. The predominant winds are south to northwest over western Los Alamos County and southwest and northeast toward the Rio Grande Valley.

Figure 3-7 shows a wind rose that represents typical conditions at Los Alamos. The wind rose shows winds 10 m above the ground at TA-50 from 1985 to 1987. Light up-slope winds from the east and south and stronger winds from the south and southwest are characteristic of the morning and afternoon. During the day, light winds from the northeast are drainage winds flowing down the Rio Grande Valley; they are caused by air cooling during the previous night. Nighttime winds are dominated by the drainage flow from the Jemez Mountains.

The evaluation of risk from high winds is based on the "Natural Phenomena Hazards Modeling Project: Extreme Wind/Tornado Hazard Models for Department of Energy Sites." The study determined that the annual likelihood of a tornado was less than one chance in a million. Straight winds dominated the risk for any annual probability greater than one chance in a million. Figure 3-8 shows the likelihood of different wind speeds, indicating the wind hazard at Los Alamos. Strong winds with gusts exceeding 60 mph are common and widespread during the spring. Lightning is very frequent over Pajarito Plateau. An average of 58 days during the year have thunderstorms; most of these storms occur during the summer. Lightning protection, therefore, is an important design factor for most facilities at the Laboratory. Hail damage can also occur. Hailstones with diameters up to 0.25 in. are common; hailstones with a diameter of 0.5 in. are rare.

Atmospheric mixing or dispersion characteristics affect the transport of contaminants released into the air. Good mixing conditions result in greater transport and dilution of released contaminants. Under poorer mixing conditions, the likelihood of higher concentrations of released contaminants increases.

Frequent clear skies and light winds promote good daytime atmospheric dispersion at Los Alamos. Complex terrain and forested vegetation also enhance vertical and horizontal mixing of the atmosphere and contaminants released into the air. At night, light winds and clear skies form a temperature inversion, restricting atmospheric dispersion. Air-flow channeling by terrain features also reduces nighttime dispersion. Poor conditions of atmospheric dispersion occur frequently in canyon bottoms. The frequency of atmospheric stability, an estimate of the dispersion capacity of the atmosphere, is approximately 50% unstable (good mixing), 20% neutral (fair mixing), and 30% stable (poor mixing) on the mesa tops of the Los Alamos area.

3.4.1 Site-specific Climatology and Meteorology

The site buildings are designed to resist the effects of a 100-yr wind of 88 mph, a design criteria from the American National Standards Institute (ANSI) A58.1, for Exposure C sites, open terrain with scattered obstructions. The CCS is designed to withstand a basic wind speed of 93 mph.

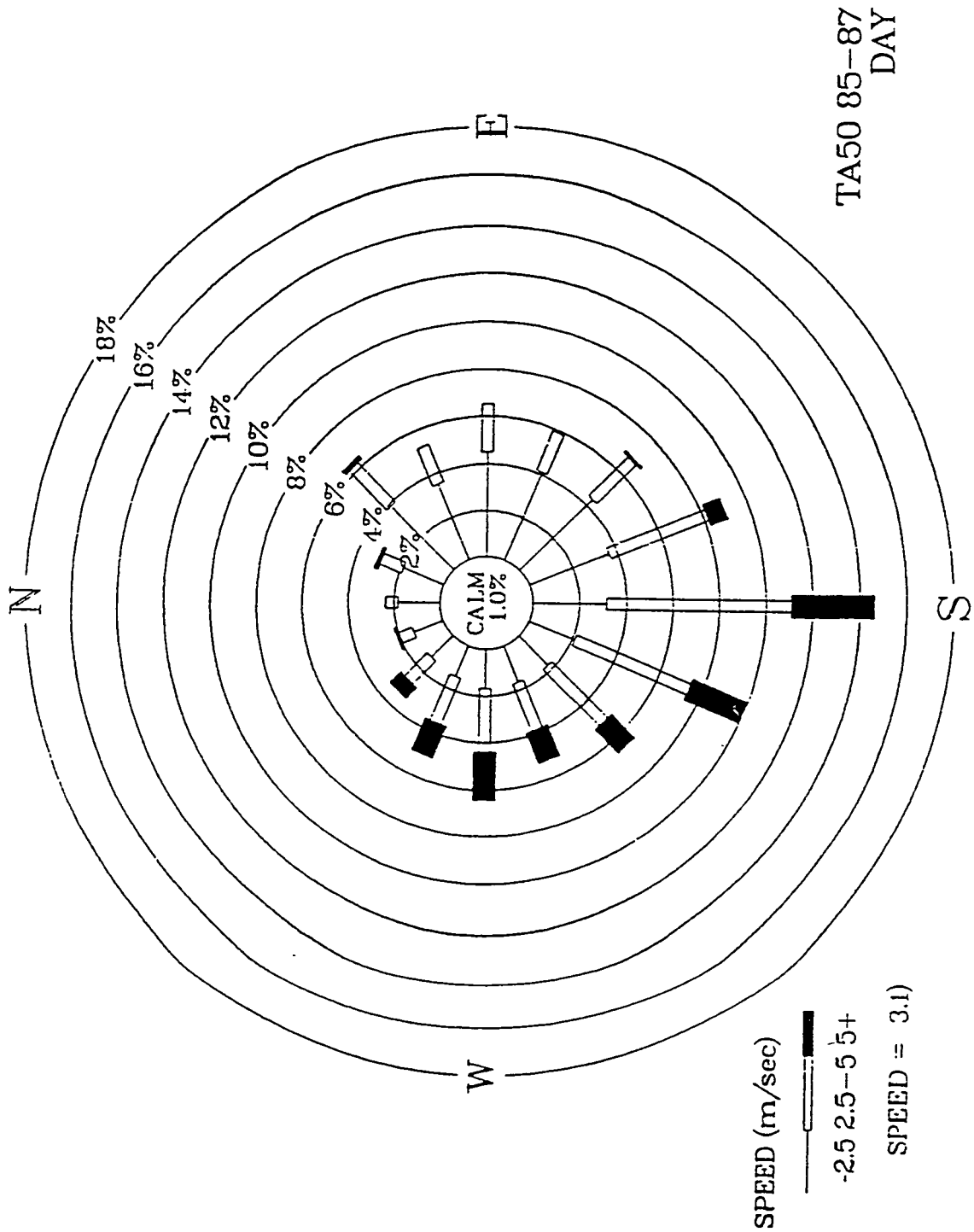

Fig. 3-7. Wind rose for the Mesatop Technical Area (TA-50).

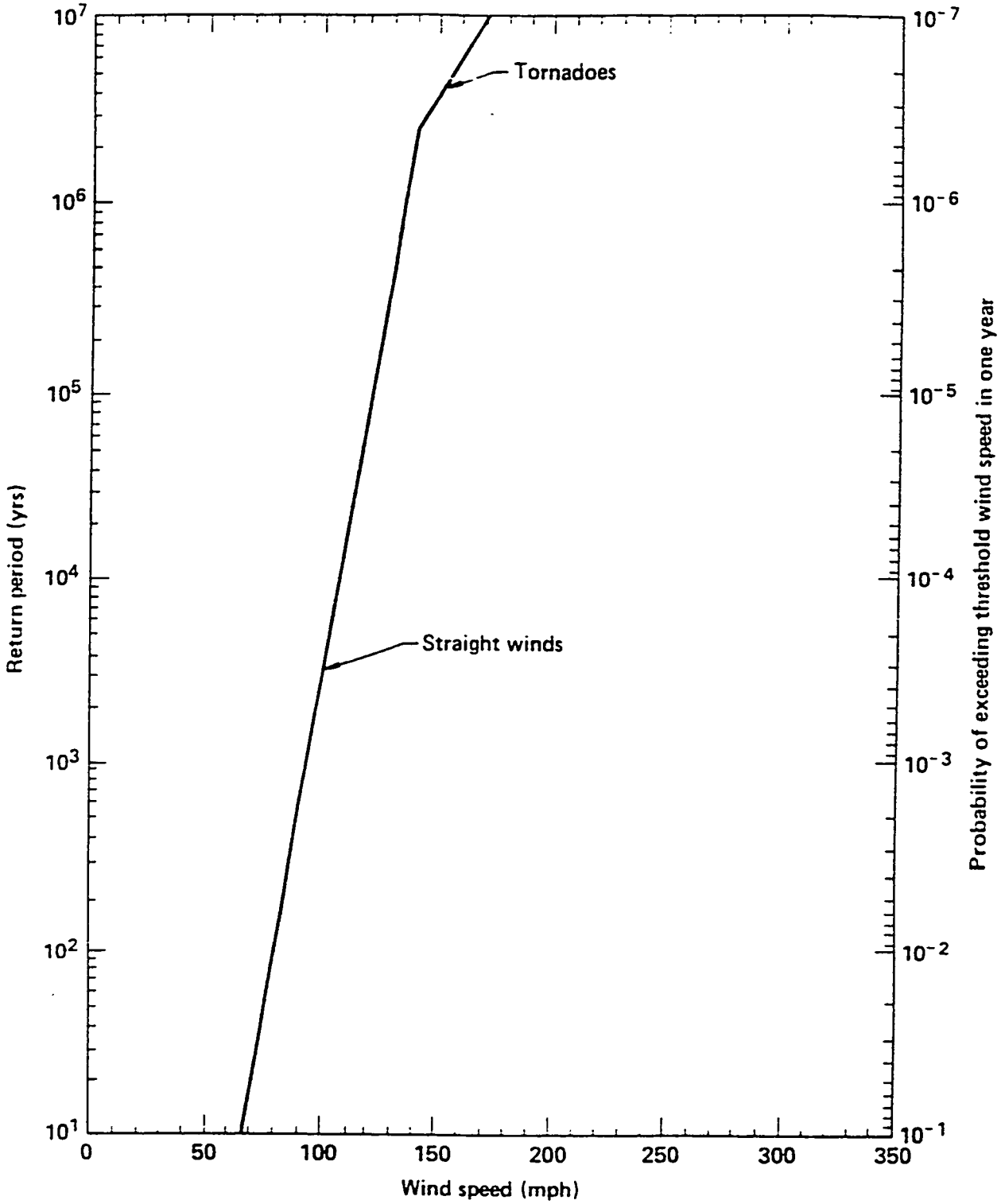

Fig. 3-8. Wind hazard at Los Alamos National Laboratory.

3.5 Population Distribution

Based on the 1990 census, Los Alamos County has a population of ~18,200. The county has two residential and commercial areas: Los Alamos and White Rock. Figure 3-2 shows the location of these two areas. With an estimated population of 11,400, the Los Alamos townsite, the original area of development, now includes the residential neighborhoods of the Eastern and Western areas, North Community, and Barranca and North mesas. White Rock includes the residential areas of White Rock, La Senda, and Pajarito Acres, and it has ~6,800 residents. About one-third of Los Alamos' employees commute from other counties. Population estimates for 1990 indicate that ~213,000 people live within a 80-km (50-mi) radius of Los Alamos. Table III-1 shows population distribution.

Table III-1 1990 Population Within 80 km of Los Alamos[a b]
Kilometers from TA-53

Direction	1-2	2-4	4-8	8-15	15-20	20-30	30-40	40-60	60-80
N	1	0	0	0	0	0	1,136	0	368
NNE	0	0	0	565	0	542	1,730	1,797	221
NE	1	0	0	0	317	15,352	1,009	1,135	3,846
ENE	0	0	0	1,940	1,563	2,716	2,729	1,187	2,214
E	0	0	83	25	556	1,145	696	0	1,402
ESE	0	0	0	0	0	293	23,151	1,067	1,476
SE	0	0	6,757	0	0	0	53,520	2,443	8
SSE	0	0	0	0	0	0	426	4,347	95
S	0	0	0	50	0	318	614	6,775	0
SSW	0	0	0	20	0	817	201	8,238	33,485
SW	0	0	0	0	0	0	315	4,157	0
WSW	0	0	0	0	0	315	313	2,545	207
W	0	0	0	0	0	0	0	164	132
WNW	0	1,435	6,535	0	0	0	0	0	3,081
NW	0	523	1,721	0	0	0	0	1,438	0
NNW	0	578	579	0	0	0	0	64	62

[a]This distribution represents the resident, non-work-force population with respect to the Los Alamos Meson Physics Facility's stack at TA-53. A slightly different distribution for Los Alamos County townsites was used to model releases from the TA-2 stack, which is closer to Los Alamos.

[b]Total population within 80 km of Los Alamos is 213,000.

3.5.1 Site-specific Population

The population at TA-53 is largest during the summer, when LAMPF is operating and site visitors are conducting experiments. A survey by LAMPF personnel estimated the population of TA-53 to be 1,100 during this time. The GTA project has resulted in a population increase of ~200 people at TA-53.

3.6 Ecological Features

Six major vegetative complexes or community types grow in Los Alamos County. Within the confines of the Laboratory, the predominant community types are ponderosa pine (at elevations from 6,900 to 7,500 ft) in the western third, pinon juniper (at elevations from 6,200 to 6,900 ft) in the central third, and juniper grassland (at elevations from 5,600 to 6,200 ft) in the eastern third. Pronounced east-to-west canyon and mesa orientations, with concomitant differences in soils, moisture, and solar radiation, produce an interlocking-finger effect among ecological life zones; therefore, many overlaps of plant and animal communities exist within small areas.

Sheer canyon walls at lower elevations serve as important nesting habitats for birds of prey. Generally, larger mammals and birds are wide ranging and occupy larger habitats. Smaller mammals, reptiles, invertebrates, and vegetation are more sensitive to variations in elevation and, therefore, are confined to smaller ranges.

Past and present uses of the Laboratory environs have caused structural changes in plant communities. Land use will continue to have important consequences for local ecosystems. Before the Laboratory was established, farming on the mesas by Native Americans and by European settlers created disturbed areas that are now in various states of succession. These areas afford suitable feeding locations for herbivores—especially deer and elk—and adjacent timbered slopes provide cover for these species.

One animal on the federal list of endangered species, the peregrine falcon, has an aerie in Los Alamos County north of the Laboratory and is known to hunt on the Laboratory reservation. The presence of 11 state-protected species and one plant species proposed for inclusion on the federal list of endangered species has been reported in Los Alamos County. Only one of these species has been reported on Laboratory property. No critical habitats have been defined on Laboratory lands.

Few activities or facilities have been located in the floodplains of canyons at the Laboratory. Natural wetlands occur in some canyons at LANL, and more extensive wetlands have developed in the vicinity of effluent outfalls.

3.6.1 Site-specific Ecology

The GTA site conforms to 10 Code of Federal Regulations (CFR) 1022, "Compliance with Floodplains/Wetlands Environmental Review Requirements," because it is not in a floodplain or wetland, the site will not imperil any rare or endangered species known to exist on Laboratory lands.

4.0 DESCRIPTION OF FACILITY 4-1
4.1 Site and Building MPF-365 4-1
4.1.1 Design Criteria 4-1
4.1.2 Location 4-4
4.1.3 Building MPF-365 Layout 4-4
4.1.3.1 Office/Laboratory Support Complex 4-4
4.1.3.2 High Bay Equipment Area 4-14
4.1.3.3 Beam Tunnel 4-14
4.1.3.3.1 Plug Doors 4-15
4.1.3.3.2 Hinge-hung Shield Doors 4-15
4.1.3.3.3 Truck Entrances 4-15
4.1.3.3.4 Vertical Access Chase 4-15
4.1.3.3.5 Laser Basement 4-16
4.1.3.3.6 Waveguide Basement 4-16
4.1.3.4 North Mechanical Room 4-16
4.1.3.5 40-kW Cryogenic Equipment Room 4-16
4.1.3.6 750-W Cryogenic Pump Room 4-16
4.1.4 Heating, Ventilating, and Air Conditioning (HVAC) 4-17
4.1.4.1 HVAC Control 4-17
4.1.4.2 HVAC Standards 4-17
4.1.4.3 Air Intakes 4-19
4.1.4.4 Air Exhaust 4-19
4.1.5 Fire-protection System 4-19
4.1.6 Lightning Protection 4-23
4.1.7 Building Utilities 4-23
4.1.7.1 Electrical Power Distribution 4-23
4.1.7.2 Electrical Substation Oil Containment 4-29
4.1.7.3 Grounding 4-29
4.1.7.4 Telephones 4-30
4.1.7.5 Natural Gas 4-30
4.1.7.6 Sewage 4-30
4.1.7.7 Building Services 4-30
4.1.8 Shielding 4-31
4.1.9 Environmental, Safety, and Health (ES&H) Protection Systems 4-33
4.2 Experimental Equipment 4-34
4.2.1 Ground Test Accelerator 4-34
4.2.1.1 Injector 4-34
4.2.1.2 425-MHz Radio-frequency Quadrupole 4-44
4.2.1.3 425-MHz Intertank Matching Section 4-45
4.2.1.4 850-MHz Drift-tube Linac 4-45
4.2.2 Output Optics 4-50
4.2.2.1 HEBT 4-50
4.2.2.2 Bend 4-53
4.2.2.3 Telescope 4-55
4.2.2.4 Fast Steerer 4-59
4.2.2.5 Beam Stops 4-59
4.2.2.5.1 Intermediate Beam Stop 4-59
4.2.2.5.2 Final Beam Stop 4-62
4.2.3 Neutral Beam System 4-63
4.2.3.1 WAFFOG Experimental Assembly 4-63
4.2.3.2 Pinhole Plate Station 4-63
4.2.3.3 Sweep Magnet 4-68
4.2.3.4 Detector Station 4-68
4.2.3.5 Vacuum-enclosure Vessels 4-72
4.2.3.6 Stand Alone Water-cooling System 4-72
4.2.4 Diagnostics 4-72
4.2.4.1 Experiments 1C and 2A 4-73
4.2.4.2 Experiment 2D 4-73

4.2.4.2.1 Offset Beam Line Diagnostics 4-73
4.2.4.2.2 Straight-ahead Beam Line 4-75
4.2.4.2.3 DTL Devices....4-75
4.2.4.2.4 Laser-beam Diagnostic Systems....4-75
4.2.4.3 Safety Issues....4-76
4.3 Accelerator Support Systems....4-77
4.3.1 Accelerator Controls 4-77
4.3.1.1 Control System Architecture....4-78
4.3.1.2 Computer Software....4-82
4.3.1.3 Experimental Operations....4-82
4.3.2 RF-power 4-83
4.3.2.1 Tetrode System 4-89
4.3.2.2 850-MHz RF Klystron System 4-91
4.3.3 The Accelerator/RFQ Vacuum System 4-95
4.3.4 Water-cooling Systems....4-96
4.3.4.1 Potentially Contaminated Water-cooling System 4-99
4.3.5 40-kW Cryogenic-cooling System....4-99
4.3.5.1 Project Requirements....4-107
4.3.5.2 System Performance....4-107
4.3.5.3 Design Considerations....4-108
4.3.5.4 Component Description....4-109
4.3.5.4.1 Cryogenic Piping....4-109
4.3.5.4.2 Cryogenic Valves....4-110
4.3.5.4.3 LH2 Storage Dewar....4-111
4.3.5.4.4 LH2 Run Dewar and Heat Exchangers....4-113
4.3.5.4.5 Hydrogen Vents....4-118
4.3.5.4.6 LN2 Storage Dewar....4-119
4.3.5.4.7 LN2 Run Dewar and Heat Exchanger 4-119
4.3.5.4.8 Circulation Compressor 4-123
4.3.5.4.9 Warm-up Heater....4-125
4.3.5.4.10 Helium-recovery System....4-125
4.3.5.4.11 Helium Purifier....4-128
4.3.5.4.12 Vacuum Pump....4-128
4.3.5.4.13 GTA Simulator....4-130
4.3.5.5 Cryogenic-cooling Distribution Manifold Subsystem 4-130
4.3.5.6 Instrumentation and Controls....4-130
4.3.5.7 Codes and Standards 4-133
4.4 Support Operations 4-137
4.4.1 High Power Cryogenic Test Bed (HPCTB)....4-137
4.4.2 750-W Cryogenic Refrigerator 4-139

Figures and Tables

Fig. 4-1. GTA construction and preliminary operations schedule. 4-2
Fig. 4-2. GTA at AT Division....4-5
Fig. 4-3. GTA facility....4-6
Fig. 4-4. GTA facility — first-floor plan....4-7
Fig. 4-5. GTA facility — second-floor plan....4-8
Fig. 4-6. GTA facility — third-floor plan. 4-9
Fig. 4-7. GTA facility — fourth-floor plan. 4-10
Fig. 4-8. GTA facility — cross section. 4-11
Fig. 4-9. Cross section of the GTA facility through the vertical access chase....4-12
Fig. 4-10. Air-handling system for the beam tunnel....4-13
Fig. 4-11. Air-intake sources....4-20
Fig. 4-12. GTA electrical distribution diagram....4-24
Fig. 4-13. Six sectors of the experimental system. 4-35
Fig. 4-14. GTA work breakdown structure. 4-36
Fig. 4-15. Configuration for 24 MeV....4-38

Fig. 4-16. GTA injector block diagram....4-40
Fig. 4-17. HV dome and injector....4-41
Fig. 4-18. Plan view of the injector....4-42
Fig. 4-19. Injector grounding plan....4-43
Fig. 4-20. Typical RFQ accelerator section....4-46
Fig. 4-21. Radio frequency quadrupole....4-47
Fig. 4-22. IMS configuration....4-48
Fig. 4-23. The 24-MeV RFQ, IMS, and DTL systems with vacuum envelopes....4-49
Fig. 4-24. DTL linac and vacuum system with diagnostic spool....4-51
Fig. 4-25. HEBT configuration....4-52
Fig. 4-26. Bend....4-54
Fig. 4-27. Telescope....4-57
Fig. 4-28. Collimator....4-58
Fig. 4-29. Intermediate beam stop....4-61
Fig. 4-30. Neutral beam....4-64
Fig. 4-31. Characterization beam stop....4-66
Fig. 4-32. Pinhole plates....4-67
Fig. 4-33. Detector station....4-69
Fig. 4-34. Neutral Beam LN2 cooling system....4-71
Fig. 4-35. Layout of diagnostic plate....4-74
Fig. 4-36. Control room....4-79
Fig. 4-37. GTA control system interfaces....4-80
Fig. 4-38.Approximately 40 input-output controllers distribute the I&C functions throughout the....4-81
Fig. 4-39. Ground plan of RF system components....4-84
Fig. 4-40. Schematic of RF component requirements....4-85
Fig. 4-41. Block diagram of the RF power....4-88
Fig. 4-42. Block diagram of klystron system....4-93
Fig. 4-43. Water-cooling system operational schematic....4-97
Fig. 4-44. Intentionally Blank....4-98
Fig. 4-45. Intentionally Blank....4-100
Fig. 4-46. Stand alone portable water chiller units....4-101
Fig. 4-47. Cooling concept selected for the GTA....4-102
Fig. 4-48. Site plan for CCS....4-104
Fig. 4-49. Piping and instrumentation diagram of the helium flow loop....4-105
Fig. 4-50. Piping and instrumentation diagram of the CCS storage and supply....4-106
Fig. 4-51. General arrangement of the LH2 storage dewar....4-114
Fig. 4-52. Details of the LH2 run dewar....4-115
Fig. 4-53. General arrangement of the LH2 run dewar....4-116
Fig. 4-54. General arrangement for the LN2 run dewar....4-120
Fig. 4-55. Details of the LN2 heat exchanger....4-122
Fig. 4-56. General arrangement of the circulating compressor....4-124
Fig. 4-57. General arrangement of the helium-recovery tank....4-126
Fig. 4-58. General arrangement of the GHe recovery compressor....4-127
Fig. 4-59. Helium purifier....4-129
Fig. 4-60. Piping and instrumentation diagram of the cryogenic-cooling distribution manifold subsystem....4-131
Fig. 4-61. One-line power diagram....4-134
Fig. 4-62. Example of a pictorial computer....4-135
Fig. 4-63. Example of an operational mode on the computer....4-136
Fig. 4-64. HPCTB....4-138
Fig. 4-65. 750-W refrigerator layout....4-140
Fig. 4-66. 750-W refrigerator schematic....4-141

Table IV-1 GTA HVAC Data....4-18
Table IV-2 GTA Estimated Electrical Loads....4-26
Table IV-3 Radiation and Shielding for Experiments 2D through 3C....4-31

Table IV-4 Design Requirements for Beam Stops 4-60
Table IV-5 RF Power System Specifications 4-86
Table IV-6 RF Component Requirements 4-87
Table IV-7 Water System Parameters 4-99
Table IV-8 Process Parameters for the LH2 Run Dewar 4-113
Table IV-9 Process Parameters for the LN2 Run Dewar 4-121
Table IV-10 Circulation Compressor Specifications 4-123
Table IV-11 Summary of CCS Instrumentation 4-132

4.0 DESCRIPTION OF FACILITY

Chapter 4 describes the Ground Test Accelerator (GTA) facilities, which consist of:

- the site and building MPF-365, constructed by a general contractor;
- the accelerator and related systems, constructed by Los Alamos National Laboratory (LANL); and
- the cryogenic-cooling system (CCS) designed and constructed by CVI, Inc.

Figure 4-1 is a condensed schedule for the construction and operations of the GTA. The major building construction activities required for Phase 2 operations of the GTA are completed.

4.1 Site and Building MPF-365

The GTA facilities are located at technical area (TA) 53 of LANL in Los Alamos, New Mexico. The GTA facilities share TA-53 with other Accelerator Test (AT) Division activities as well as the Clinton P. Anderson Meson Physics Facility (LAMPF) and its users. Chapter 3 provides additional detail on the site.

The sections below describe the design criteria; location; layout; heating, ventilating, and air conditioning (HVAC); fire protection; utilities; shielding and environmental, safety, and health protection systems for the GTA building.

4.1.1 Design Criteria

The first design criteria generated for the site and building were for an earlier version of the GTA, the Accelerator Test Stand Upgrade (ATSU). ATSU was then redefined into two phases: GTA-1 and GTA-2. The design criteria were incorporated into a new document, "Conceptual Design Report, Neutral Beam Ground Test Accelerator - Two," (Los Alamos National Laboratory, March 1986; Appendix C contains a copy of this document.) Engineering design began on the basis of that report, which addressed basic health, safety, and environmental concerns and required adherence to U.S. Department of Energy (DOE) Order 6430.1 (DOE, 1983).

In spring 1987, GTA-1 was eliminated, and GTA-2 became GTA. Two major changes were also made in the accelerator concept:

- cryogenic cooling replaced water cooling; and
- the single-beam system was changed to a system that funneled multiple beams into a single output beam.

The performance parameters were: 100-MeV particles, 100 mA, and a 5% duty factor. The facility shielding was designed for these parameters. (See Appendix E.)

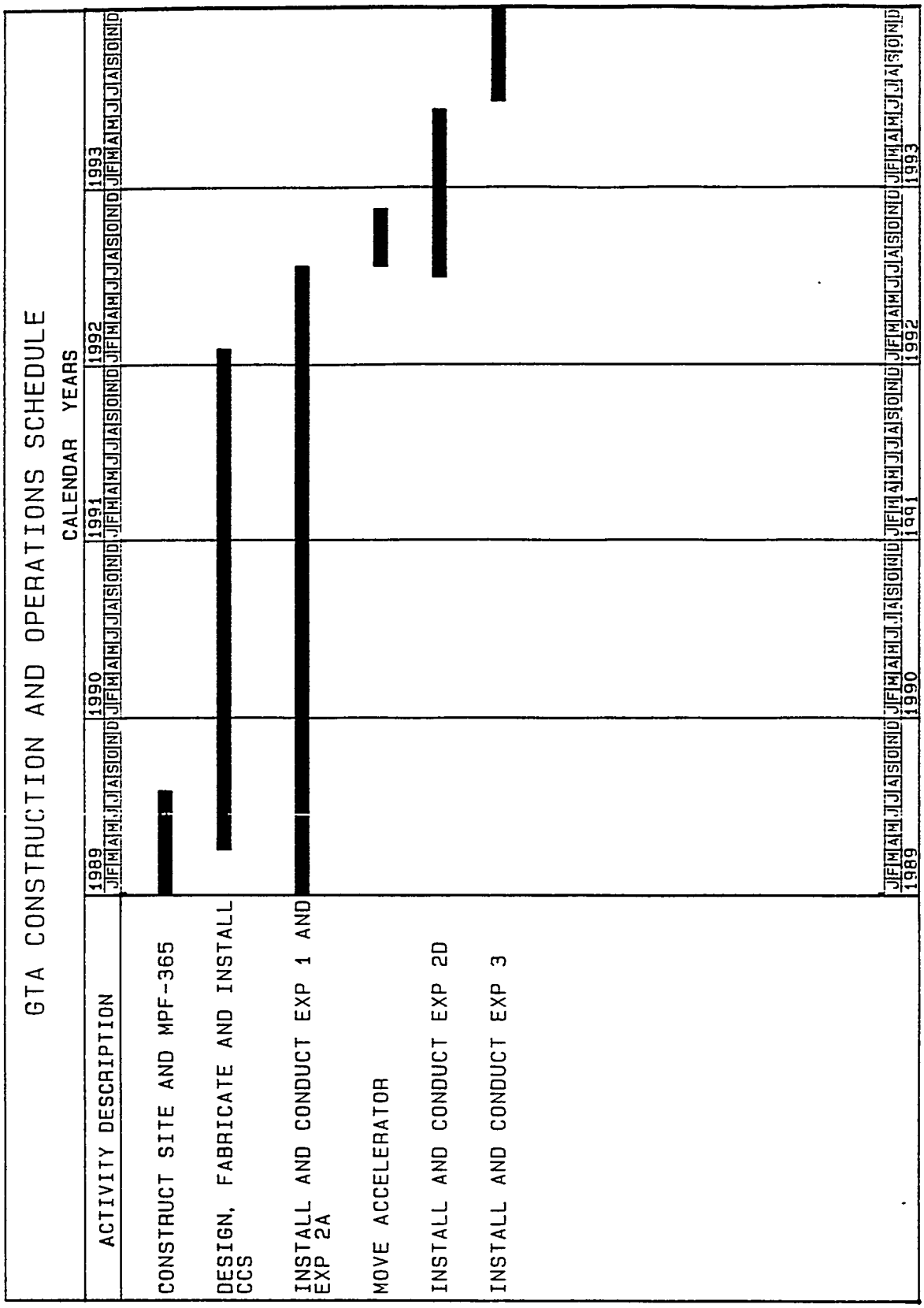

Fig. 4-1. GTA construction and preliminary operations schedule.

Another design criteria change concerns DOE building requirements. The GTA facility was designed and constructed according to DOE Order 6430.1, before it was replaced by DOE Order 6430.1A (DOE, 1989). DOE Order 6430.1 refers to the 1985 UBC, while DOE Order 6430.1A refers to the 1988 UBC and University of California Research Laboratory (UCRL) 15910. A building code analysis by the contractor showed that the design was in compliance with the 1985 Uniform Building Code (International Conference of Building Officials [ICBO]). Holmes & Narver, the architectural engineering firm for building MPF-365, provided a comparison of the building design based on the requirements of DOE Order 6430.1 and DOE Order 6430.1A. The GTA program has implemented relevant recommendations from the Holmes & Narver comparison. Appendix B contains a copy of this comparison.

With respect to seismic design, the loads used in the structural analysis would be greater under the requirements of DOE Order 6430.1A and UCRL 15910 and the analysis methods would also differ. The former requirements did not include the 0.22 g criterion included in UCRL 15910. The peak ground acceleration the MPF-365 facility will withstand without exceeding design stress values is 0.144g.

The only consequence to the public or environment of a breach in the structure due to a seismic event would be a release of activated air during, or shortly after, an accelerator-run period. Release of activated air, however, is not foreseen as a problem, because any amount would easily fall within EPA limits. The applicable earthquake return period is 1,000 yr, the projected run time is 16 hr/day, 4 days/wk for a maximum of 24 wks/yr. Decay time for the activated air is less than 1 hr, so a release of activated air to the environment is unlikely. This event is considered in the accident analysis in Chapter 7.

The site buildings are designed to resist the effects of a 100-yr wind of 88 mph, a design criteria from the American National Standards Institute (ANSI A58.1) for Exposure C sites. A complete comparison of facility versus DOE Order 6430.1A and other selected criteria is contained in Appendix B.

The CCS is designed to meet or exceed the seismic requirements of the UBC Zone 2 earthquake and to withstand a wind load of 93 mph in accordance with UCRL 15910. The CVI seismic analysis has been reviewed by a LANL specialist and a dynamic analysis has been performed which shows that the CCS meets the seismic requirements of UCRL 15910 for a moderate hazard facility.

4.1.2 Location

Section 3.1.1 discusses the site location of GTA. Figure 4-2 shows the site plan. The site plan shows the major GTA structures including MPF-365 and the 40-kW cryogenic plant area. In addition to MPF-365 and the cryogenic plant, the site includes an 82.5 ft high exhaust stack, cooling towers for the HVAC equipment and for the MPF-365 recirculating cooling-water system, two helium and two nitrogen tube trailers, and an electrical substation. The stack, towers, and four trailers are located to the east of MPF-365 at the fourth floor level of the building. A liquid nitrogen trailer is located in the east courtyard. The electrical substation is in the west courtyard of MPF-365.

4.1.3 Building MPF-365 Layout

Building MPF-365 houses the GTA. The building is approximately 70,000 ft^2, ranges from one to four stories high, and has six major interior areas: the office/laboratory support complex, the high-bay equipment area, the beam tunnel, the north mechanical equipment room, the 750-W cryogenic equipment room located in the east courtyard, and the 40-kW cryogenic equipment room on the fourth floor level to the west of the north mechanical room. (The layout of the 40-kW cryogenic plant is discussed in detail in Section 4.3.5.) Figures 4-3 through 4-10 show the configuration of the building.

The building is constructed of structural steel and has concrete floors. The viable exterior walls have a steel-studded external-wall construction with rigid insulation and stucco finish. Internal walls have steel studding that is covered with gypsum boards on both sides of the studding. The roof consists of a steel deck with foam insulation and a single-ply urethane rubber cover above the deck.

4.1.3.1 Office/Laboratory Support Complex - The office/laboratory support area is in a four-story section of a steel-framed building. This area is on the south side of the building and is 32 ft wide by 177 ft long by 58 ft high. The main entrance to MPF-365 is at the first floor lobby in this area. The first floor also houses a conference room, offices, laboratories, a water-equipment room, and a small staff machine shop.

The second floor contains the control room, capacitor bank rooms, and the computer room. On the third floor are offices and laboratories. Offices, laboratories, and a large mechanical equipment room containing building heating, ventilation, and air conditioning (HVAC) equipment are on the fourth floor. One elevator and two stairways provide access between the floors. There are crane-equipment access doors to the fourth floor

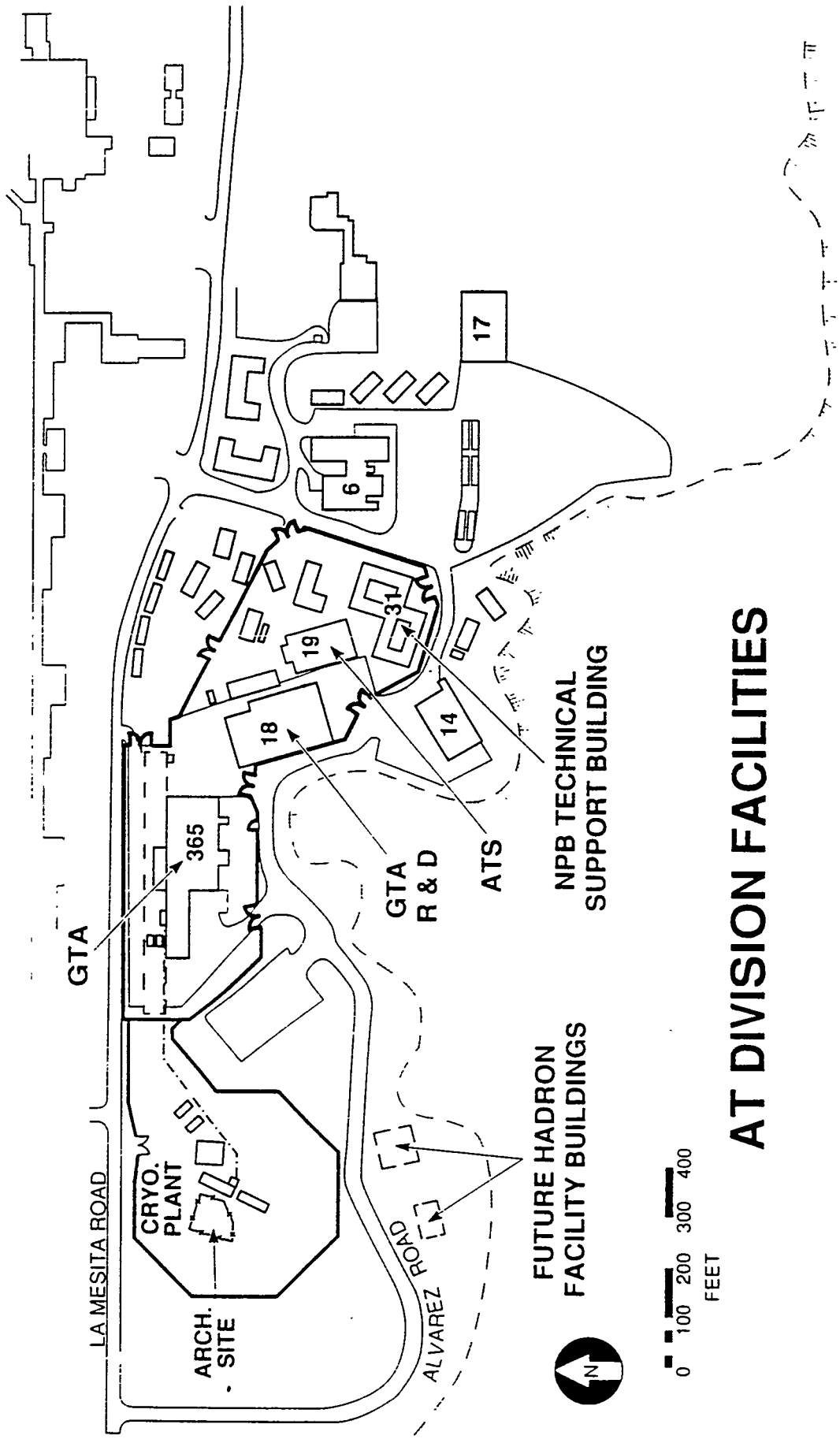

Fig. 4-2. GTA at AT Division.

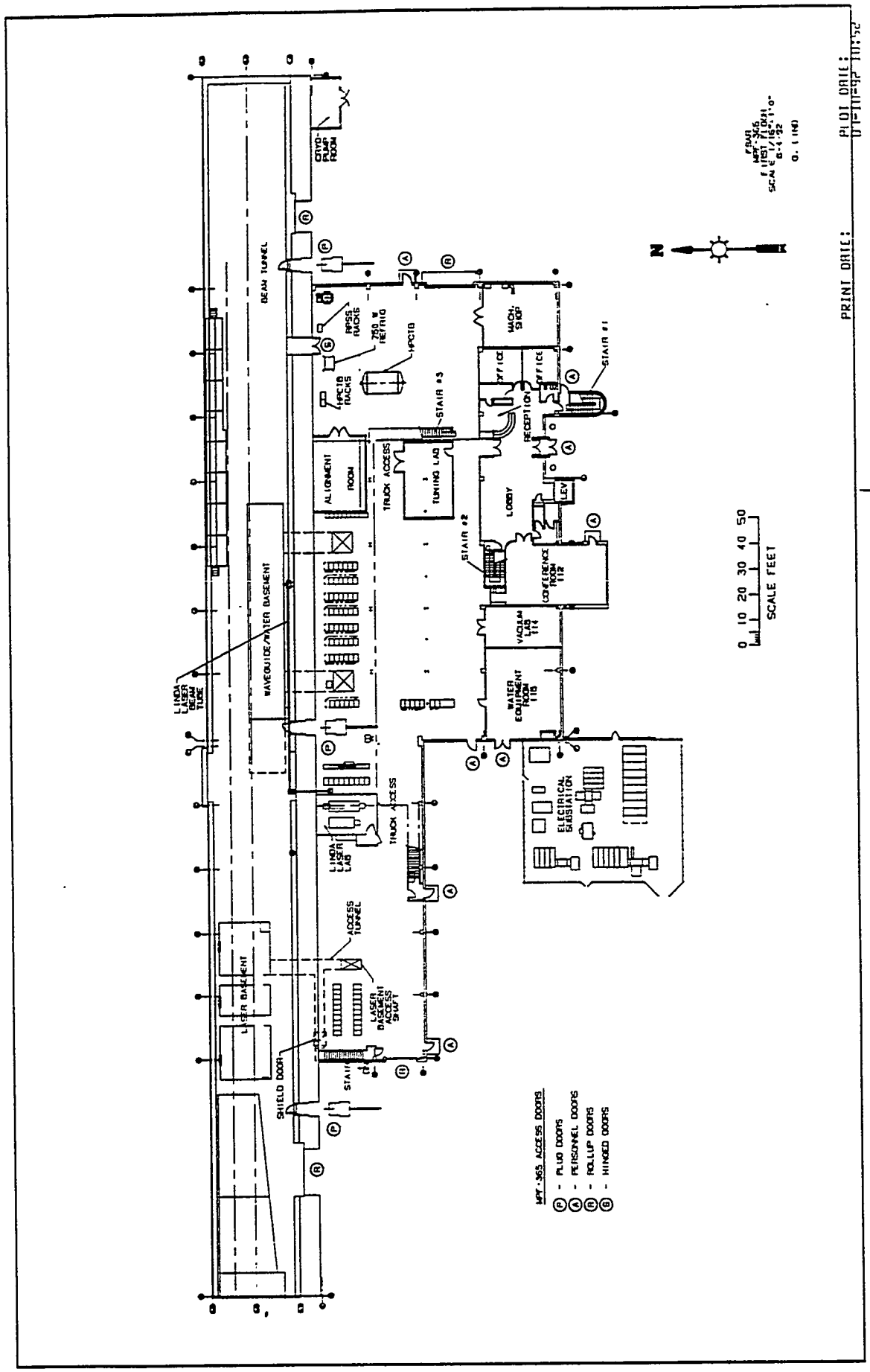

Fig. 4-4. GTA facility — first-floor plan.

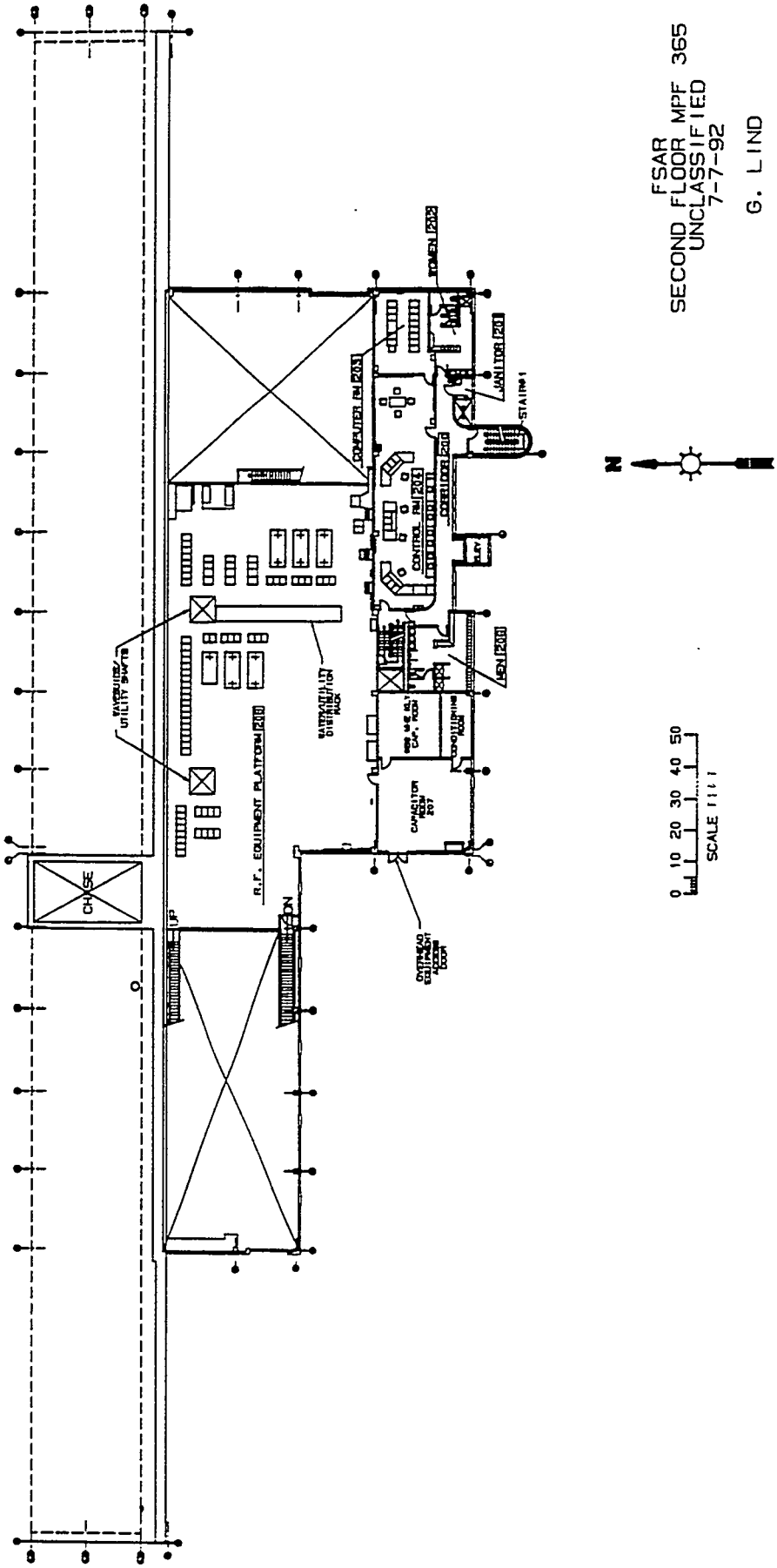

Fig. 4-5. GTA facility — second-floor plan.

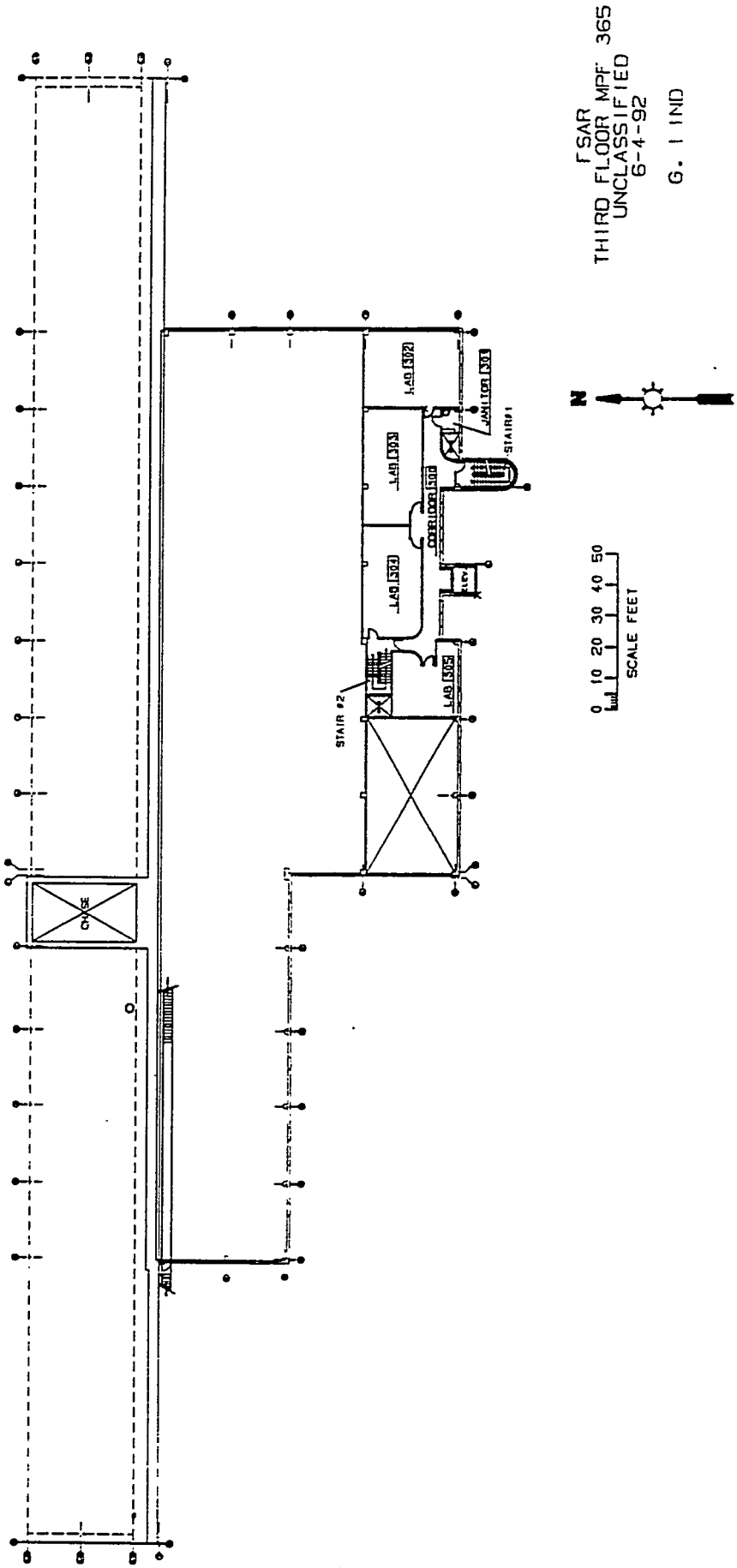

Fig. 4-6. GTA facility — third-floor plan.

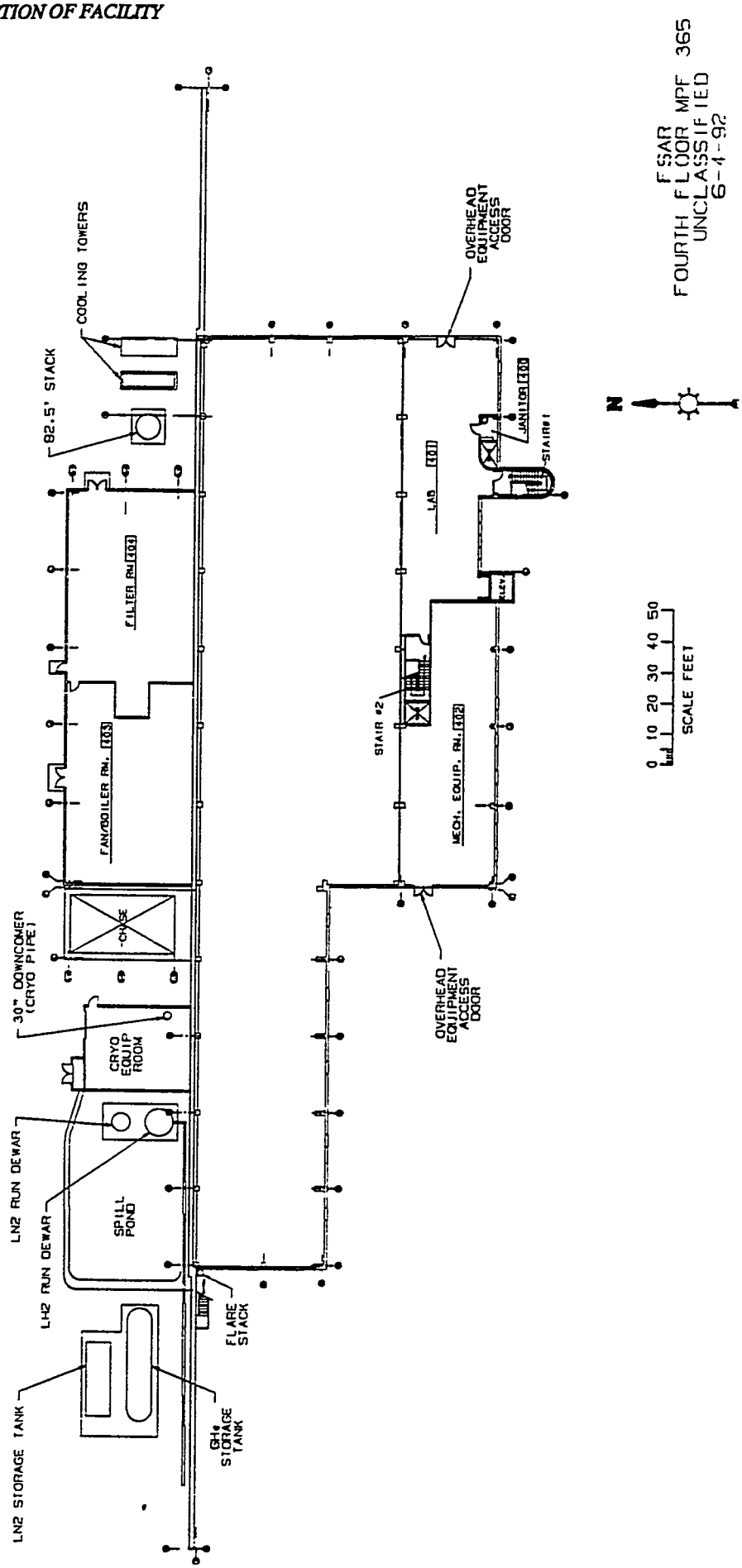

Fig. 4-7. GTA facility — fourth-floor plan.

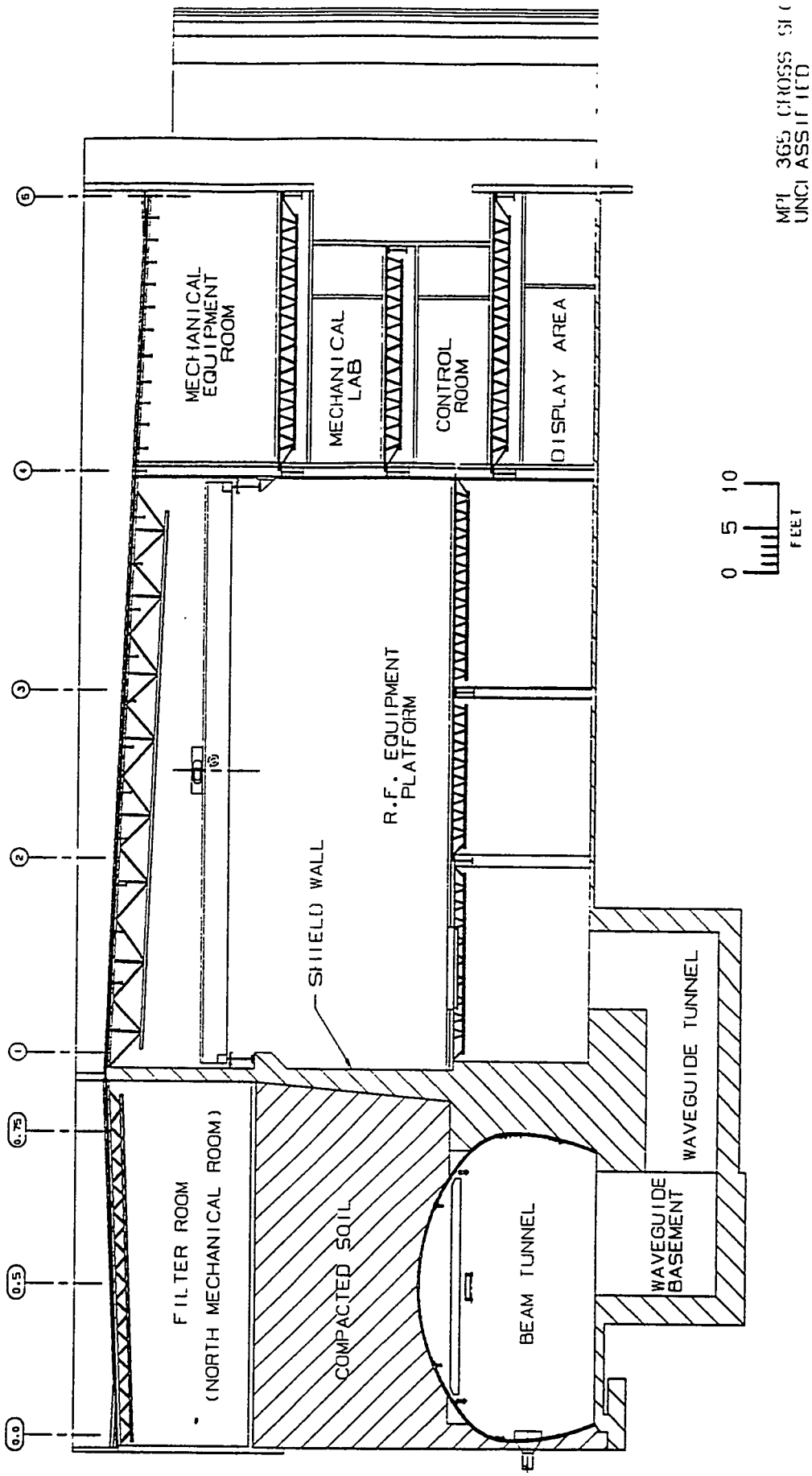

Fig. 4-8. GTA facility — cross section.

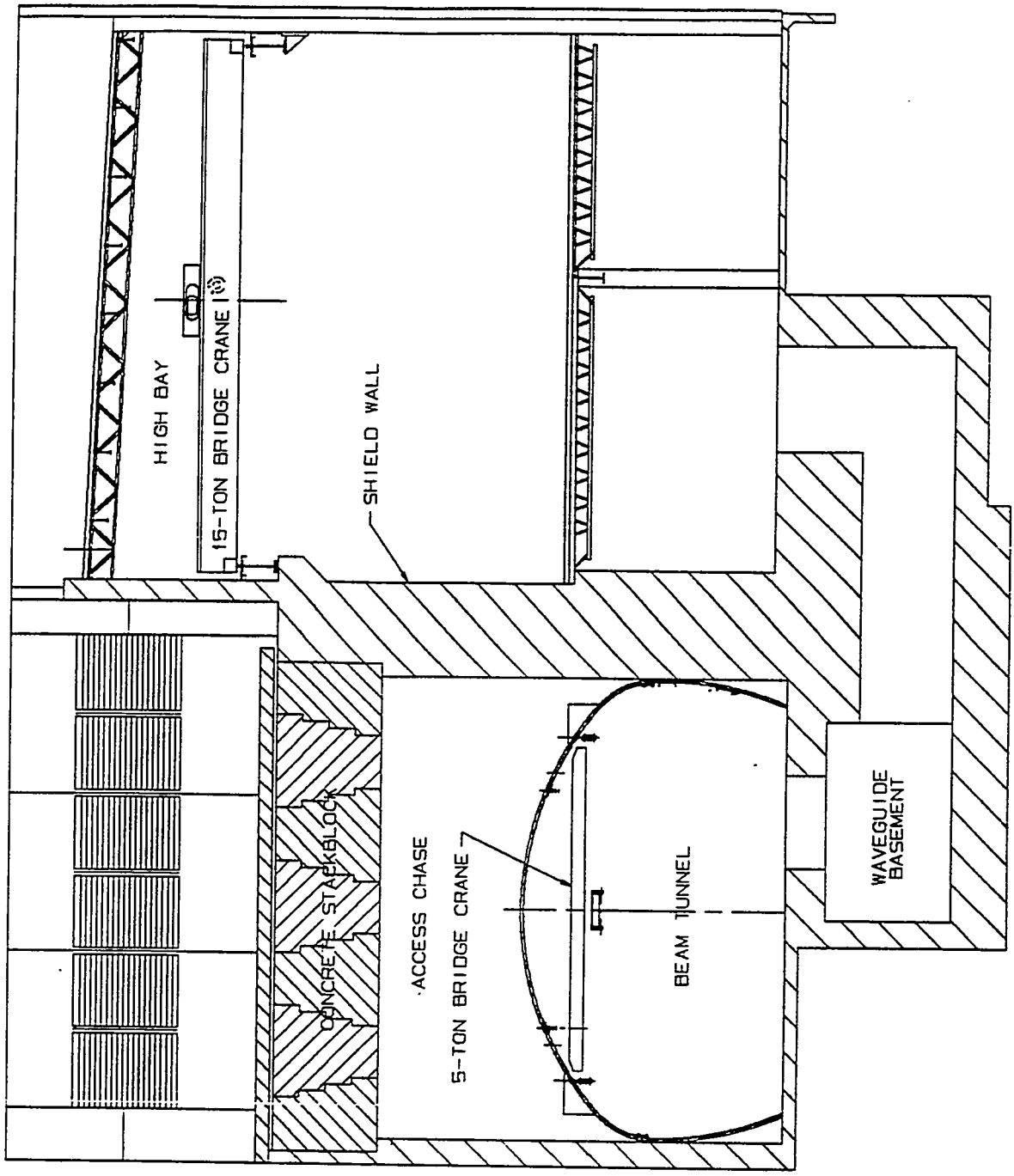

Fig. 4-9. Cross section of the GTA facility through the vertical access chase.

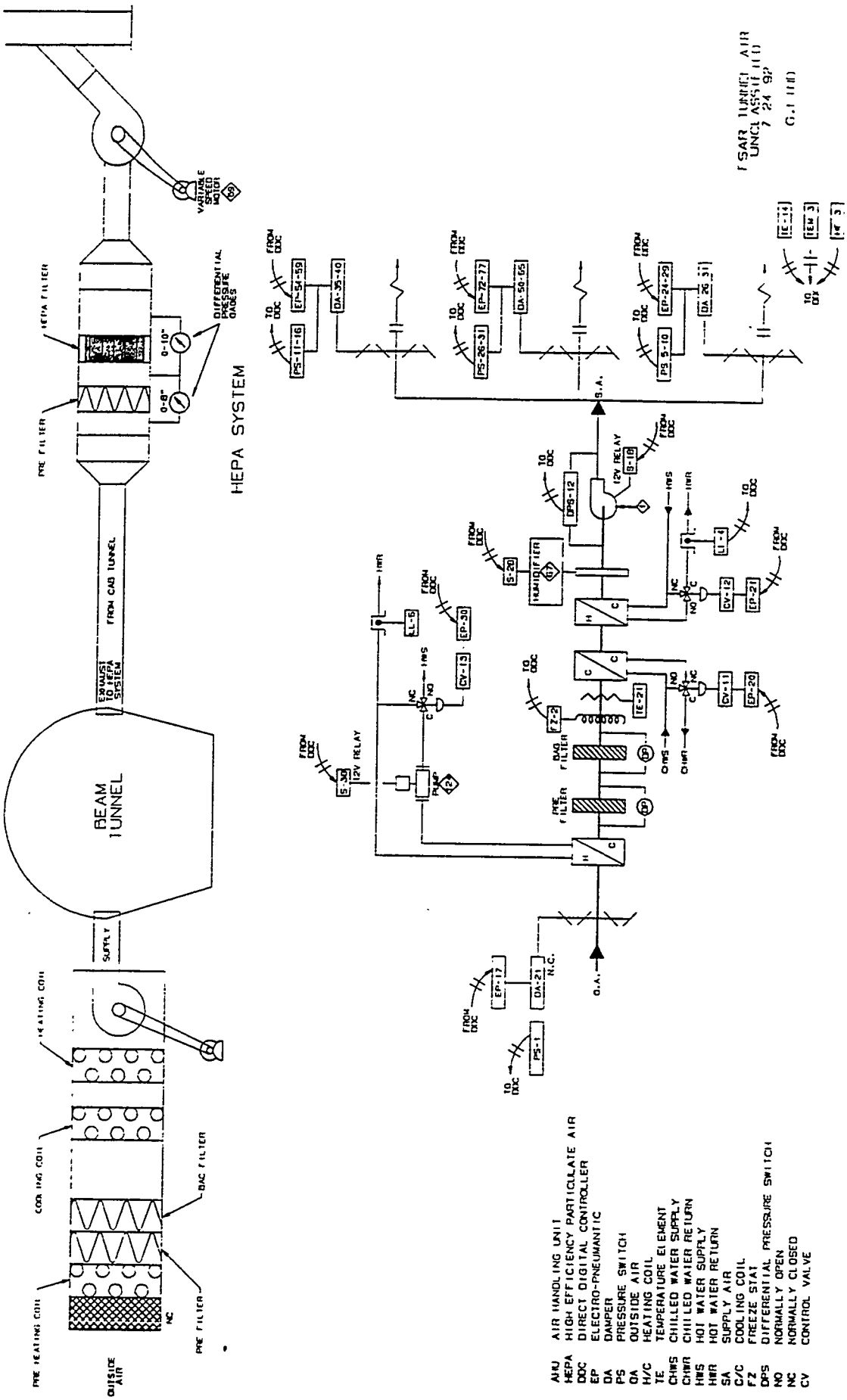

Fig. 4-10. Air-handling system for the beam tunnel.

laboratory and mechanical equipment room and to the second floor capacitor room. The only access to the machine shop is from the high bay area. The water equipment room has an access door to the first floor high-bay area and a double door to the west courtyard.

4.1.3.2 High Bay Equipment Area - The high bay is in the center of MPF-365, north of the office/laboratory support complex, and south of the beam tunnel. The high bay consists of a ground floor and a mezzanine. The east high bay is 100-ft wide by 177-ft long by 58-ft high. This portion of the bay houses the high power cryogenic test bed (HPCTB), a 750-W cryogenic refrigerator, and a mechanical assembly area. The radiation personnel safety system (RPSS) control rack will also be located here.

In the middle of the high bay is the mezzanine. The mezzanine is 16 ft above the high bay floor and consists of two connected areas: the RF power equipment and portions of the process water cooling system are in the 32-ft by 66-ft portion of the mezzanine; and the RF assembly area is in the 24-ft by 42-ft portion of the mezzanine. Access to the mezzanine is provided by three stairways: one each from the east and west high-bay areas and one from the west lobby. The 32-ft by 66-ft portion of the mezzanine and the east high bay are served by a 15-ton bridge crane. The 24-ft by 42-ft portion of the mezzanine and the west high bay are served by a second 15-ton bridge crane.

The space below the mezzanine houses several electronic racks; the alignment, vacuum, and tuning laboratories; computer-control equipment; piping for the water cooling system; an enclosed transport line for the LINDA laser; a display area; and a lunch room.

The west high bay is 123 ft long by 40 ft 6 in. wide by 58 ft high. This space contains the hydraulic equipment to operate the tunnel plug doors, a stairwell to the tunnel laser basement, and the LINDA laser laboratory. Some space is used for temporary equipment storage.

4.1.3.3 Beam Tunnel - The beam tunnel is a 34-ft wide by 473-ft long by 19-ft 10-in. high underground tunnel. The tunnel is constructed of 5/16-in.-thick corrugated, galvanized steel buried by a minimum of 18 ft of compacted tuff; it is supported on the south side by a high-density, 8-ft-thick concrete shielding wall. The compacted tuff provides radiation shielding for the equipment rooms located above the tunnel. Two partial basements—the laser basement and the waveguide basement—are beneath the

tunnel. The following sections describe the various access points to the beam tunnel. Access points to the building and tunnel are shown on Fig. 4-4.

4.1.3.3.1 Plug Doors - The three plug doors are for personnel access and are moved hydraulically. One of the doors is in the first-floor equipment area; the other two lead from the beam tunnel to the outdoors. The doorways are about 4 ft wide and 7 ft high. The plug doors are equipped with both accumulators and a backup compressed-air-operated hydraulic pumps, which allow the doors to be opened with an emergency lever if power fails. Closed plug doors are a part of the tunnel-shielding envelope when operating at 24 MeV. Proper functioning of these doors is required during 24-MeV accelerator operations.

4.1.3.3.2 Hinge-hung Shield Doors - These doors connect the east mechanical assembly area to the beam tunnel. When the radiation level in the doorway exceeds 1.5 mrem/hr, increased shielding is necessary. For 24-MeV experiments increased shielding will be required on these doors. Interlocking shielding blocks of high-density concrete will be stacked between the high bay and the accelerator. Blocks will be stacked so that no direct line of sight exists for radiation streaming into the high bay. The stacked interlocking blocks are part of the tunnel-shielding envelope required during 24-MeV operations.

4.1.3.3.3 Truck Entrances - The east and west ends of the beam tunnel each have a truck entrance. The entrances will be closed with high-density concrete stack blocks whenever shielding from radiation is necessary. When the radiation level in the truck entrances exceeds 1.5 mrem/hr, increased shielding is necessary. The stacked, interlocking arrays will be of a necessary thickness and will be used as needed based on HS-1 measurements.

4.1.3.3.4 Vertical Access Chase - A vertical access chase above the beam tunnel is located approximately in the middle of the beam tunnel. Figure 4-9 shows the vertical access chase. The vertical access chase is used to admit or remove equipment that is not accommodated by a truck entrance or a 5-ton crane. On top of the vertical-access chase is one foot of concrete with a water-tight seal that severely restricts air flow. The concrete shields the access chase. Additional concrete shielding will be added as required based on HS-1 measurements to reduce chase emissions.

4.1.3.3.5 Laser Basement - Covered by an aluminum grate, the laser basement is a 20-ft wide by 62-ft long by 12.5-ft deep partial basement under the west end of the tunnel. The basement is reached by a corridor and stairway from the west end of the high-bay equipment area. Figure 4-4 shows the location of the laser basement. The laser basement received its name because it was intended to house the beam-diagnostic laser. For the 24-MeV accelerator, however, the laser is housed in the LINDA laser laboratory on the north side of the first floor of the high bay of building MPF-365. The laser basement will house support equipment for the accelerator.

4.1.3.3.6 Waveguide Basement - The waveguide basement is a 14-ft-wide by 101-ft-long by 13.5-ft-deep partial basement, which is currently open overhead. The opening in the tunnel floor is delineated by rails. The basement will be covered with a steel structure before the start of Experiment 2D. The structure will support that portion of the accelerator positioned above the basement. The basement is connected to the high-bay mezzanine by two 8 ft wide by 24 ft 6 in. long by 8 ft high utility and waveguide access tunnels. Personnel access is provided by a permanently mounted steel ladder.

4.1.3.4 North Mechanical Room - The north mechanical room is a 42 ft wide by 128 ft long by 20 ft high metal frame structure located on the earth fill above the beam tunnel. The south wall of the room is concrete to provide radiation shielding. This room houses the high bay and tunnel HVAC equipment, HVAC computer-control equipment, tunnel air exhaust fans, and building air compressors.

4.1.3.5 40-kW Cryogenic Equipment Room - The cryogenic equipment room is a 28 ft wide by 35 ft long by 19 ft 2 in. high structure located on the earth fill above the beam tunnel. The south wall of the room is concrete to provide radiation shielding. This room houses support equipment such as heat exchangers and the control panel for the 40-kW CCS. A downcomer pipe from this room transports the cryogenics from the 40-kW CCS distribution system in the tunnel.

4.1.3.6 750-W Cryogenic Pump Room - This room is located in the east courtyard of MPF-365. It houses the compressors and helium recovery tank for the 750-W refrigerator. It is 12 ft wide by 20 ft long by 12 ft high.

4.1.4 Heating, Ventilating, and Air Conditioning (HVAC)

The areas of MPF-365 that have independent HVAC systems are described in Table IV-1. The flow rates are based on seven air changes per hour as defined in the Laboratory's Facility Engineering Mechanical Standards Manual. Pressure sensors in the high bay and tunnel control fan speed so that the tunnel pressure remains negative with respect to the rest of the building. The high-bay and support-area systems are designed to maintain a positive pressure with respect to the outside and to keep out dust and dirt. An on/off light system indicates the operational status of the beam tunnel HVAC. Figure 4-10 shows the air-handling system for the beam tunnel.

Smoke control is accomplished by start-up of the exhaust fan and shut-down of the supply fan for the area where the fire-alarm signal occurs. The only exception is the exhaust fan (EF59) for the beam tunnel. EF59 cannot be restarted in the locked-out position. During normal operations the supply fan would shut down, the supply air damper would close, and EF59 would continue to run.

4.1.4.1 HVAC Control - A direct digital controller (DDC) regulates HVAC systems in the facility. The DDC is composed of a processor with a central and input processing function and interface controllers for input/output (I/O) peripherals. The HVAC system also includes a color cathode-ray tube (CRT) terminal and an 80-character printer. The random-access memory (RAM) for the DDC is provided with a 72-hr battery backup with automatic recharging. Room 402 of the GTA facility houses the DDC computer and a controller; another controller is in Room 403. (See Fig. 4-7.)

The software of the operating system is programmable read-only memory (PROM) resident and operates independently of other computers. The operating system controls the communication between the CRT, the printer, the controllers, and the I/O modules. The system provides alarm monitoring and reporting, control application packages, interfacing with a variety of sensor and actuator types, and built-in diagnostic routines.

4.1.4.2 HVAC Standards - HVAC systems comply with the applicable codes found in the handbooks of the American Society of Heating, Refrigeration, and Air Conditioning Engineers (ASHRAE). Selecting the HVAC equipment and completing HVAC calculations were done according to ASHRAE GRP 158. The system's components comply with the following applicable requirements:

Table IV-1 GTA HVAC Data

Space	System HV No.	Supply Air Capacity (cfm)	Exhaust Air Capacity (cfm)	Cooling Type	Intake Prefilter	Intake Bag Filter	Exhaust HEPA Filter	Filter Air Replaceable
Beam tunnel	HVA 1	30,225	37,740	Refrigeration	X	X	X	
Center high bay	HVA 2	53,520	60,525	Indirect cooling (water cooler)	X	X		X
East high bay	HVA 3	39,600		Indirect cooling (water cooler)	X	X		X
Office/lab support complex	HVA 4	20,460		Indirect cooling (water cooler)	X	X		X
Tuning lab	HVA 5	1,240		Refrigeration	X			X
LINDA clean room	HVA 6	15,000	14,680	Refrigeration				X
Alignment lab	HVA 7	3,058	1,495	Refrigeration (chilled water)	X			X
West high bay	HVA 8	16,950	40,350	Indirect cooling (water cooler)	X	X		X
Capacitor room	HV 5	4,500		None	X			
Water room	HV 6	6,740		None	X			
Control computer room	CAW 1	5,895	4,350	Refrigeration	X			X

Notes: Bag filters have an ASHRAE efficiency of 80%.

East, west, and center high bays are one contiguous volume served by three air-supply systems.

Exhaust of the high bay areas is provided by five roof-mounted fans, which are evenly distributed from east to west. Exhaust and supply capacities for these areas should be added to determine balance.

Humidity is controlled in units HVA 1, 2, 3, 4, 6, and 8, and CAW 1.

Office/laboratory areas and capacitor and water rooms have no exhaust fans; return air is recirculated or exhausted outside, depending on temperature.

- ASHRAE 55 on design;
- ASHRAE 90 on performance;
- National Fire Protection Association (NFPA) 90 and NFPA 91 on control;
- NFPA 45 on lab ventilation;
- American Refrigeration Institute (ARI) 520, ARI 530, and ARI 590 on refrigeration;
- Air Moving and Conditioning Association, Inc. (AMCA) 201 on fans;
- American Conference of Governmental Industrial Hygienists (ACGIH) Vent Manual on industrial ventilation;
- ARI 850 on intake filtration;
- American Society of Mechanical Engineers (ASME) N509;
- Underwriter's Laboratory (UL) 586;
- ASME N510;
- Energy Research and Development Administration (ERDA) 76-21 Nuclear Air Cleaning Handbook;
- Sheet Metal and Air Conditioning Contractor's National Association (SMACNA) on duct standards, varied as required;
- American Air Balancing Council (AABC) A-82 testing; and
- DOE Order 6430.1A 1550-3.2 on balancing.

4.1.4.3 Air Intakes - The air-intake sources for building MPF-365 are on the building's west side. The air-intake source for the tunnel (HVA-1) and HVA-3 are on the west side of the north mechanical equipment room. The air intake for HVA-8 is on the roof of the west high bay. Figure 4-11 shows the tunnel and the east and west high bays' air-intake sources. A hydrogen-gas sensor is installed at the air intake on the roof. The alarm sounds in the control room and is connected to an autodialer when the control room is unmanned.

4.1.4.4 Air Exhaust - The air exhaust for the building consists of two systems. One system exhausts through the main exhaust stack and is used for control of potentially activated tunnel air. The other exhaust system handles the remainder of the building. These systems are interlocked with the HVA units to provide building pressure control.

4.1.5 Fire-protection System

The fire-protection system for the GTA facility conforms to DOE Order 6430.1 criteria, which were the applicable criteria at the time the facility was designed. (The Holmes & Narver study in

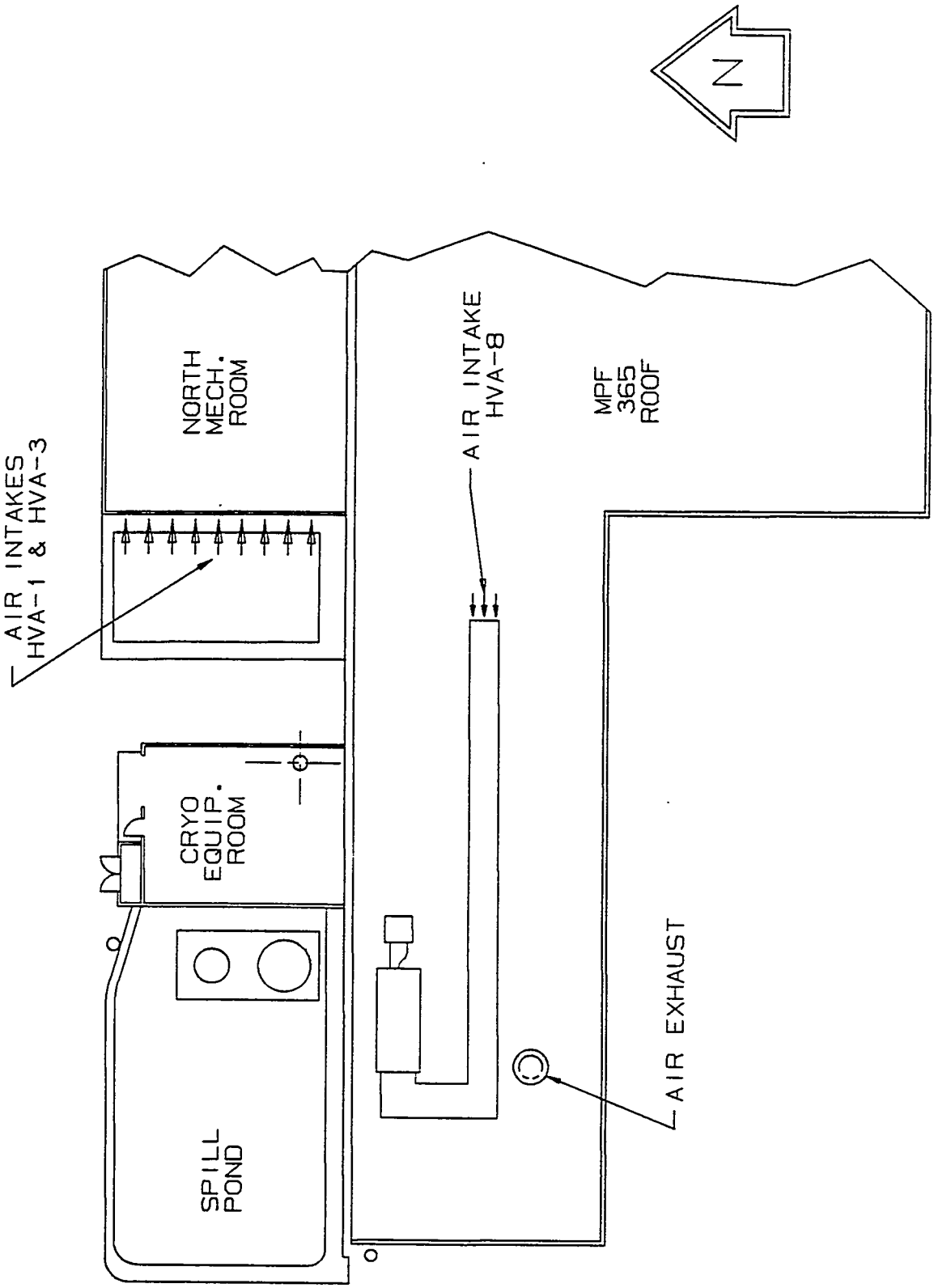

Fig. 4-11. Air-intake sources.

Appendix B explains how the system also conforms to DOE Order 6430.1A.) The fire-protection system consists of a water-sprinkler system, a fire-control panel connected to the Laboratory's central-alarm station (CAS), smoke detectors in the elevator and lobby, manual fire-alarm pull boxes, and fire extinguishers. The GTA facility has two types of water-sprinkler systems: pre-action and wet-pipe. The preaction sprinkler system protects the beam tunnel. The wet-pipe sprinkler system protects the rest of the facility. The systems are hydraulically designed to provide a density of 0.18 gpm per square foot of protected area over the most hydraulically remote 2,000 ft^2 area. An 8-in. loop line from the 1,000,000-gal storage tanks at TA-53 feeds the systems. The automatic sprinkler systems conform to NFPA 13 and to the "Improved Risk" criteria of DOE Order 5480.7, "Fire Protection."

The preaction system was provided to eliminate water-filled piping and prevent activation of the water during accelerator operation. Plastic pipe was also used because of a similar consideration. The primary fire hazards are associated with electrical equipment, so the use of a preaction system also provides considerable added protection against potential loss from accidental leakage of the sprinkler system. Smoke detectors are spaced at 23-ft intervals along the top of the beam tunnel to ensure that the preaction valves open before sprinkler heads fuse. The preaction sprinkler system does not depend on the building's electrical systems. It has its own emergency power source with the fire-alarm system. If the emergency power were to fail, an additional trouble alarm would be transmitted to the CAS. In the event of no power, the supervisory nitrogen would bleed off the system (transmitting a supervisory alarm) and the valve would trip, filling the pipe with water (and transmitting a water flow/fire alarm). No water would be discharged, because a sprinkler head would not fuse on power loss.

Operation of the sprinklers is not dependent on a power supply, so the only possible deficiency in a fire would be the failure to transmit an automatic alarm. Manual alarms and the telephone system, however, provide alternate mechanisms for transmitting an alarm. The failure of the power supplies would also transmit an alarm to the CAS. This applies only to the preaction system in the accelerator tunnel. The remainder of the facility is protected by a wet-pipe sprinkler system, and the operation of such a system is not affected by failures of the alarm or fire-detection system.

Failure of the detection system in the tunnel is extremely unlikely because of the supplemental power and supervisory alarm systems. Supervisory alarms are automatically transmitted to the CAS, so actions do not depend on people at the facility. Dedicated fire alarm system personnel,

through Johnson Controls (JCI), ensure reliability of the system. Because operation of the sprinklers is not dependent on a power supply, the only possible deficiency in the event of a fire would be the failure to transmit an automatic alarm. Therefore, the tunnel alarm systems are set up so that the failure of the power supplies will transmit an alarm to the CAS.

The fire-control panel for the GTA facility provides a maximum of 48 fire zones. Thirty-six zones are currently in use. A fire in any zone triggers the fire-control panel, which then sends a signal to the concentrator. The signal is coded to the panel, zone number, and to where the fire began. The concentrator is connected by a telephone line to the Laboratory's CAS, which is manned 24 hrs a day. When the concentrator receives the fire-alarm signal, a message containing the coded information is sent to the appropriate fire station. The CAS also radios the appropriate fire station that the alarm has been received.

The fire-control panel is at the main entrance to the building and is readily accessible to the fire department; the concentrator panel and the battery-power supply are mounted in a nearby room. When the fire-alarm system is activated, the ventilation system controls adjust the supply fans, in the area of the fire, to a low-volume mode and the exhaust fans to a full-exhaust mode.

Manual fire-alarm pull boxes are near the main entrance and each regularly used exit door. "Slow whoop" fire-alarm horns with flashing strobe lights are located throughout the building for the entire building's evacuation.

The fire trucks and ambulances of the Los Alamos Fire Department require five to six minutes to reach the site in good weather. Traffic and bad road conditions could increase that response time by 5 to 10 min. The fire-protection system is designed to mitigate any losses, however, so the consequences of a delayed response would not be significant to the facility. Emergency planning, evacuation drills, and first-aid training mitigate personnel risks. Two fire companies and the rescue truck unit, with a minimum of 10 firefighters, will respond to a fire alarm. Two fire hydrants for the fire department are provided on the south side of the building; there is also a hydrant on La Mesita Road opposite the north mechanical room and another is at the CCS site.

The design requirements conform to "ordinary hazard, Group 2" of the NFPA 13, which describes ordinary combustible materials piled less than 12 ft high. The design thus conforms to DOE Order 5480.7, which does not specifically spell out sprinkler design requirements, but indicates sprinklers may be required when certain loss potentials may exist without them.

In addition to the MPF-365 fire protection, a sprinkler-deluge system is installed for the LH_2 storage and run dewars to protect against exposure to fire. This system is designed for a flow coverage of 0.50 gal/(min/ft^2), which meets the NFPA 13 requirements. Temperatures are detected by a pilot-head system that will activate the sprinkler system when any of the pilot-head temperatures reach 135° F. The system can also be activated at manual pull stations at the CCS site and in the GTA control room. Sprinkler coverage is also provided in the CCS equipment room.

4.1.6 Lightning Protection

The installed lightning protection system meets NFPA Standard No. 78 and has a Lightning Protection Institute (LPI) label.

NFPA 78, "Lightning Protection Code," covers lightning protection requirements for ordinary buildings, miscellaneous structures and special occupancies, heavy-duty stacks, and structures containing flammable liquids and gases. By NFPA definition of these facilities, only the LH_2 storage and run dewars need lightning protection. According to Chapter 6, paragraph 6.3.1, of NFPA 78, structures used for storing flammable liquids or gases and constructed of sheet steel of 3/16-in. thickness, or greater, are essentially self-protecting against damage from lightning strikes and need no additional protection. The wall thickness of both the LH_2 storage and run dewars is greater than 3/16 in. However, both lightning protection and grounding for these dewars and equipment is provided according to NFPA 78.

4.1.7 Building Utilities

The following sections describe the building's utilities.

4.1.7.1 Electrical Power Distribution - The power-distribution system for the GTA facility and site originates from the LAMPF distribution substation. (See Figs. 4-4 and 4-12.) Two primary 13.2 kV-3 phase feeders from the 15-kV switchgear at the fence-enclosed LAMPF substation route to a sectionalizing switch at the northeast corner of the GTA facility area. This sectionalizing switch distributes the two feeders.

One feeder services the GTA/AT Division complex:

- GTA staging building (MPF-18);
- Accelerator Test Stand laboratory (MPF-19);
- GTA office building (MPF-31);
- AT Division office building (MPF-6); and
- other miscellaneous support buildings within the complex.

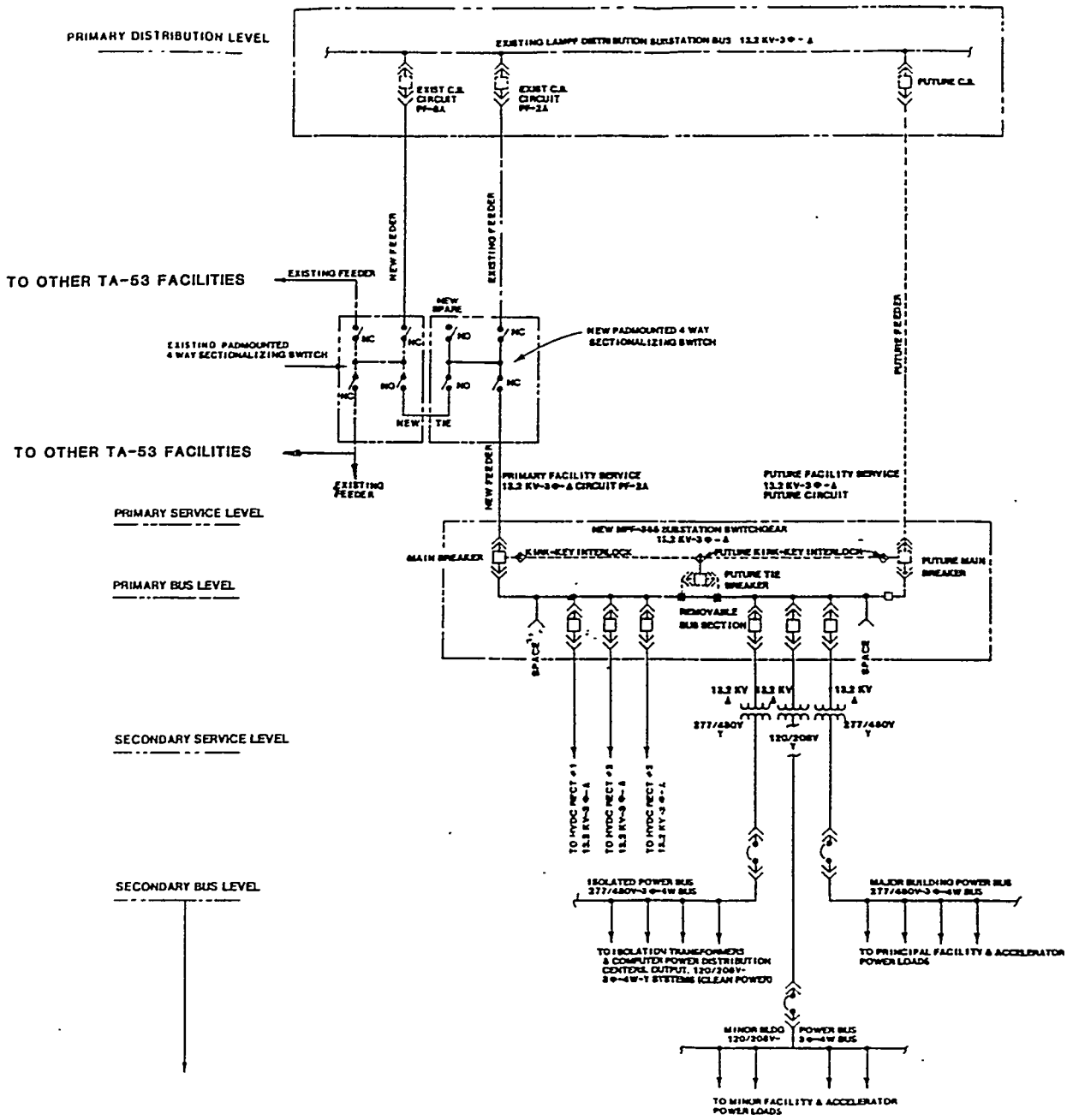

Fig. 4-12. GTA electrical distribution diagram.

One feeder services the GTA facility substation:

- GTA facility (MPF-365); and
- future Accelerator Prototype Laboratory (APL) facility.

If necessary, because of equipment or cable failure and maintenance, the sectionalizing switch can switch either feeder to distribute power service to the GTA facility (reference drawing: #ENG-C-45209; Sheet: #E80.1). This could only be done if significant load shedding and control was accommodated, to prevent overloading the single remaining feeder to the entire GTA and AT Division complexes.

Provisions for a future additional primary 13.2 kV-3 phase feeder have been provided if future loads require this additional service from the LAMPF substation. A second main primary breaker and a tie breaker would need to be installed on the GTA facility primary switchgear to accommodate this feeder addition (reference drawing: 112Y-282242; Sheet: #5).

The primary system to the GTA facility is distributed for service through primary switchgear SWG-M (reference drawing: 112Y-282242; Sheet: #5), in the GTA facility substation. This switchgear separately feeds the following facilities, unit substations and equipment (reference drawing: 112Y-282242; sheets: 1, 2, 3, 4, and 6):

- unit substation/switchgear—SWG-A (major power bus);
- unit substation/switchgear—SWG-C (isolated power bus);
- unit substation/switchgear—SWG-3 (minor power bus);
- padmounted transformer—T/SWG-B/PS-001 (RF power);
- future padmounted transformer—T/SWG-B/PS-002; and
- future APL facility padmounted transformer.

Unit substation/switchgear SWG-A subfeeds to the padmounted HVdc power supply, PS-005 (RF power). See Table IV-2 for the description of the secondary service to the GTA Facility and the estimated facility load tabulation.

The following systems and equipment have battery-backed electrical power and will remain temporarily operational during a power outage:

- emergency lighting system

Table IV-2 GTA Estimated Electrical Loads

Item #	Description of Loads: (Subdivisions by Facility Buses)	Voltage (V)/ Phase	Connected Loads		Future Expansion Loads		Total Loads		Estimated Demand Loads		Notes
			kW	HP	kW	HP	kW	kVA	kW	kVA	
	Major-facility Power Bus: "SWG-A"	277/480 V/ 3 Phase									
1	RF and HVdc system	480 V/ 3 Phase	125.0				125.0	138.9	122.5	136.1	Demand load estimated during GTA run
2	Magnet and solenoid dc power supplies	480 V/ 3 Phase	235.0				235.0	326.4	169.2	235.0	Demand load estimated during GTA run
3	Vacuum system	277/480 V/ 3 Phase	119.0	188.00	7.0	11.00	274.5	322.9	159.2	187.3	Demand load estimated during GTA run
4	40-kW cryogenic-cooling system (CCS)	480 V/ 3 Phase	88.6	43.50	88.6	43.50	153.5	202.0	121.5	159.9	Demand load estimated during GTA warmup
5	750-W refrigerator system	480 V/ 3 Phase	0.0	250.00	0.0	0.00	186.5	245.5	186.5	245.5	Demand load estimated during run
6	Water-cooling system	480 V/ 3 Phase	48.0	487.50	2.0	130.00	510.7	622.8	357.5	435.9	Demand load estimated during GTA run
7	Facility-lighting system	277/480 V/ 3 Phase	170.0		30.0		200.0	206.2	190.0	195.9	
8	Heating, ventilating & air conditioning (HVAC)	480 V/ 3 Phase	183.0	537.00	75.0	50.00	695.9	756.4	487.1	529.5	
9	General receptacles (welding outlets)	480 V/ 3 Phase	150.0	12.25		10.00	166.6	185.1	53.3	59.2	
10	Laser	480 V/ 3 Phase	20.0		40.0		60.0	76.9	52.2	66.9	Demand load estimated during GTA run
11	Miscellaneous	277/480 V/ 3 Phase	50.0	20.00	15.0	5.00	83.7	92.9	82.0	91.1	
	Subtotal:	277/480 V/ 3 Phase	1,188.6	1,538.25	257.6	249.50	2,691.4	3,176.0	1,981.0	2,342.3	
	Minor-facility Power Bus: "SWG-3"	120/208 V/ 3 Phase									
1	RF tetrodes and klystron modulator stations	120/208 V/ 3 Phase	255.0		185.0		440.0	517.6	286.0	336.5	Demand load estimated during GTA run
2	Rack power (primarily ventilation)	120 V/ 1 Phase	93.0	46.50	50.0	25.00	196.3	218.2	192.4	213.8	Demand load estimated during GTA run

Table IV-2 GTA Estimated Electrical Loads (continued)

Item #	Description of Loads: (Subdivisions by Facility Buses)	Voltage (V)/ Phase	Connected Loads		Future Expansion Loads		Total Loads		Estimated Demand Loads		Notes
			kW	HP	kW	HP	kW	kVA	kW	kVA	
3	Vacuum system	120/208 V/ 3 Phase	84.0	10.00	39.0	4.00	133.4	157.0	77.4	91.1	Demand load estimated during GTA run
4	40-kW CCS	120 V/ 1 Phase	1.5	2.00	1.5	2.00	6.0	7.9	4.3	5.7	Demand load estimated during GTA warmup
5	750-W refrigerator system	120 V/ 1 Phase	6.4	2.00	0.0	0.00	7.9	10.4	4.8	6.3	Demand load estimated during run
6	Water-cooling system	120 V/ 1 Phase	8.0	0.67	32.0	2.00	42.0	51.2	29.4	35.8	Demand load estimated during GTA run
7	Facility-lighting system	120 V/ 1 Phase	42.0		10.0		52.0	53.6	49.4	50.9	
8	HVAC	120/208 V/ 3 Phase	20.5	4.50	10.0	1.50	35.0	38.0	24.5	26.6	
9	RF system and dc power supplies	120/208 V/ 1 Phase	140.6		123.6		264.2	310.8	171.7	202.0	
10	Laser	120 V/ 1 Phase	12.0				12.0	15.4	6.0	7.7	Demand load estimated during GTA run
11	General receptacles	120/208 V/ 3 Phase	91.0	5.00	25.0	2.00	121.2	134.7	38.8	43.1	
12	Miscellaneous	120/208 V/ 3 Phase	30.0	10.00	15.0	5.00	56.2	62.4	55.1	61.2	
	Subtotal:	120/208 V/ 3 Phase	784.0	80.7	491.1	41.5	1,366.2	1,577.2	939.8	1,080.7	
	Isolated-facility power bus: "SWG-C"	277/480 V/ 3 Phase									
1	Accelerator injector power	120/208 V/ 3 Phase	150.0				150.0	157.9	150.0	157.9	Demand load estimated during GTA run
2	Data processing (control racks)	120/208 V/ 3 Phase	35.0		24.0		59.0	81.9	41.3	57.4	Demand load estimated during GTA run
3	Low-level RF control	120/208 V/ 3 Phase	9.0		7.0		16.0	22.2	11.2	15.6	Demand load estimated during GTA run
4	Computer room	120/208 V/ 3 Phase	22.0		7.0		29.0	40.3	20.3	28.2	Demand load estimated during GTA run

Table IV-2 GTA Estimated Electrical Loads (concluded)

Item #	Description of Loads: (Subdivisions by Facility Buses)	Voltage (V)/ Phase	Connected Loads		Future Expansion Loads		Total Loads		Estimated Demand Loads		Notes
			kW	HP	kW	HP	kW	kVA	kW	kVA	
5	Control room	120/208 V/ 3 Phase	28.0		8.0		36.0	50.0	25.2	35.0	Demand load estimated during GTA run
6	Miscellaneous	120/208 V/ 3 Phase	20.0	6.00	10.0	2.00	36.0	40.0	35.2	39.2	
	Subtotal:	277/480 V/ 3 Phase	264.0	6.0	56.0	2.0	326.0	392.3	283.2	333.2	
	Main Primary Bus: "SWG-M"	13.2 KV/ 3 Phase									
1	RF/HVdc power supplies	13.2 KV/ 3 Phase	476.0		476.0		952.0	1,120.0	571.2	672.0	Demand load estimated during GTA run
2	Major Power Bus: "SWG-A"	13.2 KV/ 3 Phase	1,188.6	1,538.3	257.6	249.5	2,691.4	3,176.0	1,981.0	2,342.3	Demand load estimated
3	Minor Power Bus: "SWG-3"	13.2 KV/ 3 Phase	784.0	80.7	491.1	41.5	1,366.2	1,577.2	939.8	1,080.7	Demand load estimated
4	Isolated Power Bus: "SWG-C"	13.2 KV/ 3 Phase	264.0	6.0	56.0	2.0	326.0	392.3	283.2	333.3	Demand load estimated during GTA run
5	Future Accelerator Prototype Laboratory	13.2 KV/ 3 Phase			500.0	280.00	708.9	770.5	496.2	539.4	
	Total loads:	13.2 KV/ 3 Phase	2,712.6	1,624.9	1,780.7	573.0	6,044.5	7,036.0	4,271.4	4,967.7	

- RPSS Kirk-key releases;
- security system;
- IMS/RF window heaters;
- oxygen monitors;
- verbatim auto-dialer;
- facility fire-alarm system;
- CCS fire-alarm system;
- CCS fire-deluge system; and
- facility HVAC control system (direct digital controller).

4.1.7.2 Electrical Substation Oil Containment - The GTA facility substation is outside the building on its southwest side. It has an oil-containment trench running the length of the west end of the substation. The substation is also surrounded by a 6-in. high (minimum) curb for spill containment on the pad (Reference Drawing: ENG-C-45209; Sheets: C3, C5, S29, and E6). The 3 unit substation transformers contain up to 1,056 gal of silicon oil. The largest of these transformers holds a total of 550 gal. The padmounted HVdc power supply, PS-005, holds approximately 500 gal of Shell diala oil. Each of the padmount transformers, T/SWB-B/PS-001 and PS-002 for Power Supplies, PS-001 and 002, hold 350 gal of Univolt oil, and the 2 power supply units, PS-001 and PS-002, hold 635 gal of Univolt oil. The total amount of oil storage on the substation pad in the equipment (including future HVdc equipment), is 3,526 gal. The oil containment capacity of the trench is up to 1,526 gal of liquid. The pad with the curb containment is capable of holding approximately 10,112 gal of liquid. These figures don't consider the displacement of the oil by equipment, permanently installed or temporarily placed, on the pad, or rain water and other contaminants displacing the oil in the trench. The total possible containment of liquid on the substation pad is 11,638 gal.

4.1.7.3 Grounding - Grounding in the facility is in accordance with Section 250 of the National Electric Code (NEC, 1987).

For the CCS, the storage and run dewars and all noncurrent-carrying metal parts of electrical equipment are grounded according to NFPA 70 (NEC). This equipment includes the control panel, electrical power cabinet, motors, heaters, and instrumentation. All major

process equipment is grounded. Remote equipment, such as the piping system, flare stack and run tanks, are grounded using suitable ground rods for connecting the grounding conductors. All grounding materials are installed according to NFPA 70 methods.

4.1.7.4 Telephones - Site telephones are part of the Laboratory's telephone system, which includes the 911 emergency-response number. The building's telephone distribution network uses a Dual Eagle System. This system provides private intercom lines and three open common lines between most telephones in the building. Paging throughout the building and the CCS area is available from all building telephones and through a phone line that accesses the paging system from any outside phone.

The north mechanical room and the CCS equipment room are in secure areas. The CCS area is under AT Division administrative control as obtained by a variance from the Operational Security and Safeguards Division (OS). The building MPF-365 phone and page system extends to the CCS area.

4.1.7.5 Natural Gas - The DOE gas system supplies the natural gas for the building. The natural gas piping system was installed according to Code of Federal Regulations (CFR), Natural Gas, Title 49, Part 192.

4.1.7.6 Sewage - Sanitary sewage lines are connected to the TA-53 sewage system through a lift station.

4.1.7.7 Building Services - Building services will include potable water from the Laboratory water system, backflow preventors installed in the incoming water line, process-chilled water for cooling parts of the experimental system, compressed air with -40°F dewpoint at 100 psig for control and general use, a trailer station for two nitrogen trailers, and a distribution system for supplying dry nitrogen (N_2) backfill gas to the experimental system. Compressed air is provided from compressors and air dryers located in the north mechanical room. It's distributed by piping through the facility. Gaseous nitrogen is provided from the two tube trailers east of the north mechanical room and distributed by piping in the beam tunnel and other areas as required. A liquid N_2 trailer located in the east courtyard primarily serves the 750-W cryogenic refrigerator system. Overhead cranes are in the east and west high bay areas and in the beam tunnel. The east and west high-bay areas are each serviced by one 15-ton crane; both of these cranes also

4.1.8 Shielding

The CCS design provides the capability of filling the cryogenic piping downcomer shaft to the accelerator tunnel with polyethylene beads to provide neutron shielding, which would be required for 100 MeV operation. A provision is also made for draining the beads. Detailed calculations of the radiation streaming through the downcomer show that with the downcomer empty (no polyethylene beads), the dose rate for 24 MeV operations is about 0.02 mrem/h, which is far below allowable personnel radiation exposure limits. (See Appendix F) Therefore, for 24 MeV operation it is planned to leave the downcomer empty. Radiation monitoring will be performed to confirm these calculations.

Reaction products, air activation, and component activation, which occur for experiments 2D, 3A, 3B, and 3C, mandate that no personnel are in the tunnel during operations and for a time period after machine operations have stopped. (See Table IV-3.) The plug doors are closed during operations; the hinge, truck, and vertical chase shielding are of a required thickness to reduce streaming of radiation from the tunnel and to achieve exposures well below guidelines. (See Section 4.1.3.)

Access will be determined following ALARA principles, which are based on LANL Rad Con Manual (LM 107-01).

Table IV-3 Radiation and Shielding for Experiments 2D through 3C

Experiment	System	Energy (MeV)	X rays	Neutrons	γ	Shielding
2D[a]	RFQ	2.5	Yes	No	No	Lead[b]
	RFQ and IMS	2.5	Yes	No	No	Lead
	RFQ, IMS, DTL tank	24	Yes	Yes	Yes	Facility and local lead
	Intermediate beamstop	24	Yes	Yes	Yes	Facility and local lead
3A[a]	Same as 2D plus 180° bend	24	Yes	Yes	Yes	Facility and local lead
3B[a]	Same as 3A plus telescope	24	Yes	Yes	Yes	Facility and local lead
3C[a]	Same as 3A and 3B but with aluminum beam stop	24	Yes	Yes	Yes	Facility and local lead

[a] Facility shielding will prevent exposure to the public and employees.
[b] Actual shielding used will be based on HS-1 measurements.

Shielding built into the existing facility is designed for radiation levels much greater than those encountered in experiments 2D and above at 24 MeV. These designs were based on calculations that used a set of experimental parameters derived from 100-MeV estimates. (See Appendix E.)

Local shielding of the beam stops is used during 24-MeV operations. This shield reduces air activation during operations and provides quicker access to the tunnel after an operation stops.

Local shielding around the beam stops also reduces the need for other tunnel shielding. Other local shielding may be added as determined by HS-1 radiation monitoring.

Copies of memos containing shielding calculations for the 24-MeV operations are in Appendix F. The 8-ft-thick, high-density concrete shielding wall between the beam tunnel and the occupied space of building MPF-365 was built as a result of calculations for ATSU, an earlier version of the GTA.

A copy of a memo containing the shielding calculations for the 24-MeV accelerator is also in Appendix F. Shielding calculations based on a 100-MeV operation are described in a letter from R. J. Morford to T. R. Cole, "Subject: GTA-100, Shielding Summary," November 18, 1988. (See Appendix G). Calculations cover shielding for the final beam stop, the point sources, and linac and waveguide streaming. They also include shielding required between the beam tunnel and the occupied building space and between the beam tunnel and the area directly above the earth fill. Figure 4-8 shows the shielding configuration in the beam tunnel.

The laser and waveguide basements are connected to occupied space by tunnels under the 8-ft shield wall. The tunnels provide an offset pathway, which attenuates neutrons by several orders of magnitude from streaming to occupied areas. The laser basement was included in the building design when the diagnostic lasers were to be located in the tunnel. The laser beamline now penetrates the shield wall in a beam transport tube to the east of the LINDA laser lab (see Fig. 4-4). Local shielding may be required for this penetration. RF waveguides, which connect the accelerator to the RF power source, are routed through the two tunnels under the 8-ft shield wall, into the waveguide basement, then up to the accelerator. The shielding required in the waveguide tunnel is discussed in the letter from R. J. Morford to T. R. Cole.

There are about 200 conduit runs that end in the beam tunnel and range from 1 to 4 in. in diameter. Before exiting the concrete shielding or foundation slab, the runs leaving the beam tunnel have a minimum of two 90° bends.

High-efficiency particulate air (HEPA) filters will be installed to collect radioactive particulate matter. These filters will be used in experiments at 24 MeV. The only radioactive particulates expected in the facility are the activation of airborne dust in the beam tunnel. The HEPA filters are not shielded. A health-physics technician from HS-1 measures the filters' radiation levels before they are changed. Disposal of the used filters will be in accordance with requirements set forth in the AT Division SOP for Radioactive Hazardous Waste (Appendix N).

The Klystron system is monitored for x rays periodically as required by the Klystron SOP. Following increases in beam power, HS-1 conducts a radiation survey to verify the adequacy of shielding. Surveys are also conducted following any installation or modification of shielding. Shielding surveys ensure that shielding fulfills design requirements and that personnel are adequately protected.

During accelerator operations, the beam-tunnel air is activated by neutrons from protron, neutron (p,n) reactions. In order to maintain a negative pressure in the tunnel, the activated air will be exhausted up the 82.5-ft stack. (See Fig. 4-3.)

4.1.9 Environmental, Safety, and Health (ES&H) Protection Systems

The ES&H protection systems for 24-MeV operations consist of the following:

- fire protection;
- radiation personnel safety systems (RPSS);
- high-voltage interlocks;
- shielding;
- area radiation monitors;
- laser interlocks;
- ventilation;
- oxygen monitors and alarms;
- hydrogen monitors and alarms;
- a remotely operated shutoff valve in the LH_2 fill line for CCS;
- hydrogen flare stack;
- LH_2 liquid-level sensor and shutoff interlock;
- thermal radiation barrier along La Mesita Road;
- vehicle crash barriers for the CCS site;
- TV-surveillance monitors for the CCS site;
- redundant pressure relief devices for the LH_2 system;
- backup pressure regulator for CCS helium flow loop; and
- overspeed protection and power limit for CCS compressor.

Chapter 11 describes these ES&H protection systems in more detail, with the exception of the facility systems described in Chapter 4.

To ensure the maximum overall safety of the CCS and its planned operations, the Boyer Committee, an independent group of experts in the field of cryogenic engineering and technology,

performed a safety review of the design. (See Appendix S). As a result of this group's recommendations, a number of additional safety features were incorporated into the basic safety design provided by the CCS contractor.

4.2 Experimental Equipment

After the GTA building was constructed, the installation of the components for the experimental system began. A sequence of experiments to check the performance of new types of equipment will be completed in sufficient time so that necessary changes can be made before the final system is incorporated. Safety considerations are more complex for each subsequent phase.

The Laboratory is in the process of implementing the LANL Radiological Controls Manual (LM 107-01, December 1992) which embodies the DOE N 5480.6 Radiological Controls (Rad Con) Manual. In the development of the LANL Access Control Standard (LS 107-01.1), careful consideration was given to compliance with the requirements of ANSI Standard N43.1 The only significant difference is in the case of the N43.1 requirement for continuous monitoring and alarm devices within the machine area and at the control console. In this case, an alternate approach has been chosen by LANL that requires a redundant barrier interlock system along with status lights and/or signs. This redundant safety system is now being implemented for GTA and will be in place prior to 24 MeV experiments.

The experimental system for GTA consists of the accelerator and associated elements, including all components concerned with accelerating or affecting the beam. Cryogenic cooling enables higher accelerating fields and greater mechanical stability. The experimental system has six elements: the injector, the accelerator, the magnetic optics (including diagnostics), the neutral beam, the controls and automation, and RF power. The objectives for these experiments are to demonstrate beam brightness much greater than that in the existing NPB facilities; cryogenic operation of the RFQ, IMS, and DTL module; compact accelerator design; and automatic computer control.

Figure 4-13 shows the elements of the GTA organization that are roughly defined by the elements of the experiment. Figure 4-14 shows the work breakdown structure for the experimental system. Each element of the work breakdown structure is contained within the six organizations shown in Fig. 4-13.

Section 5.1 describes in detail the experimental operations. The following sections describe the subsystems of the experimental system.

4.2.1 Ground Test Accelerator

For the 24-MeV configuration, the GTA consists of an H^- injector, a 425-MHz cryogenically cooled radio frequency quadrupole (RFQ), a cryogenically cooled 425-MHz intertank matching section (IMS), and a cryogenically cooled 850-MHz RF DTL. This configuration is shown schematically in Fig. 4-15. The RFQ, IMS, and DTL are housed in connected vacuum envelopes. The vacuum system provides a simulation of the space environment in which the ultimate NPB accelerator will operate. The vacuum also provides the necessary thermal isolation required for operation in the laboratory at cryogenic temperatures.

4.2.1.1 Injector - The GTA injector generates the required H^- beam, transports it, then matches it to the RFQ accelerator, which is the first RF accelerator module in GTA.

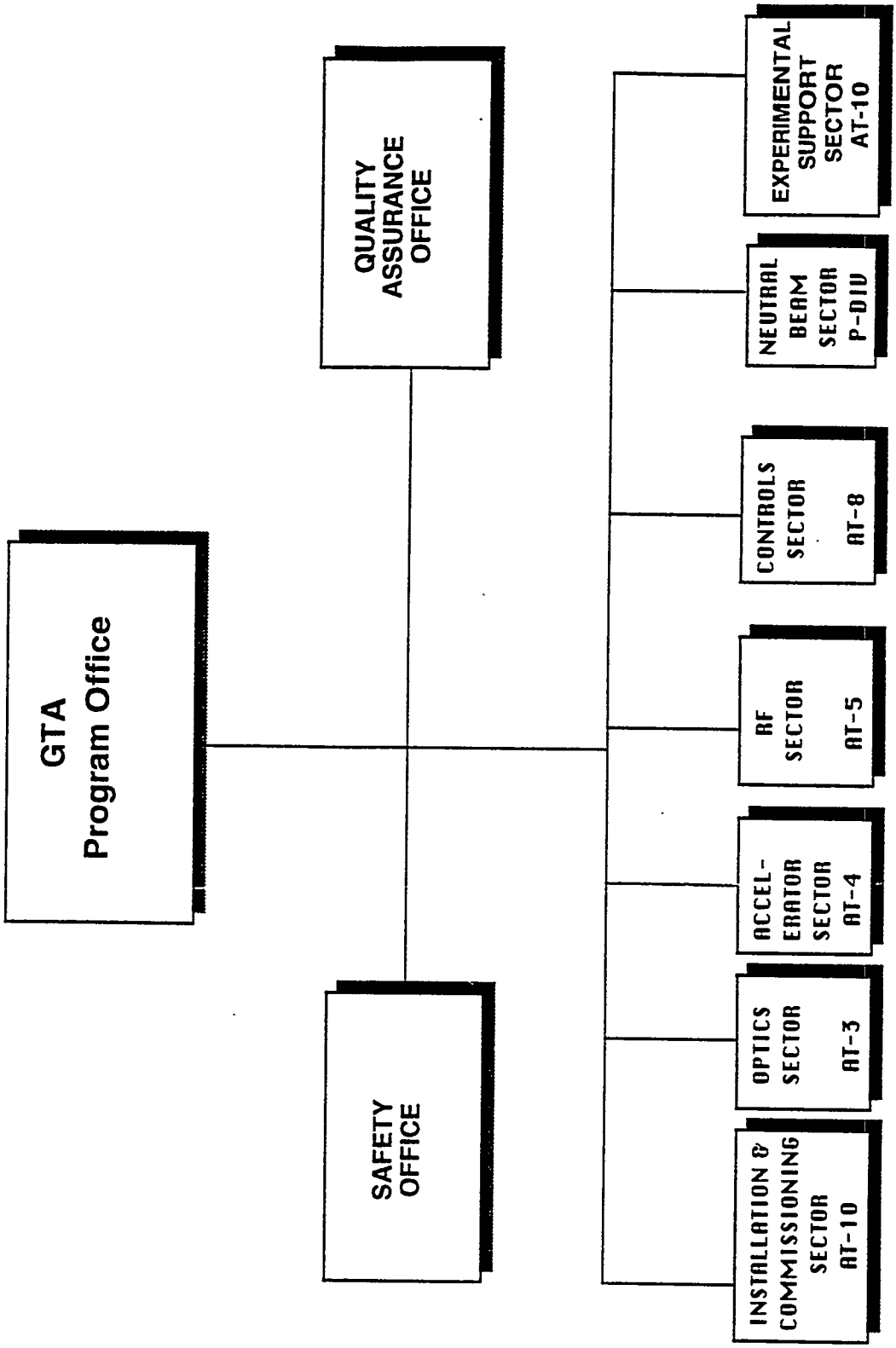

Fig. 4-13. Sectors of the experimental system.

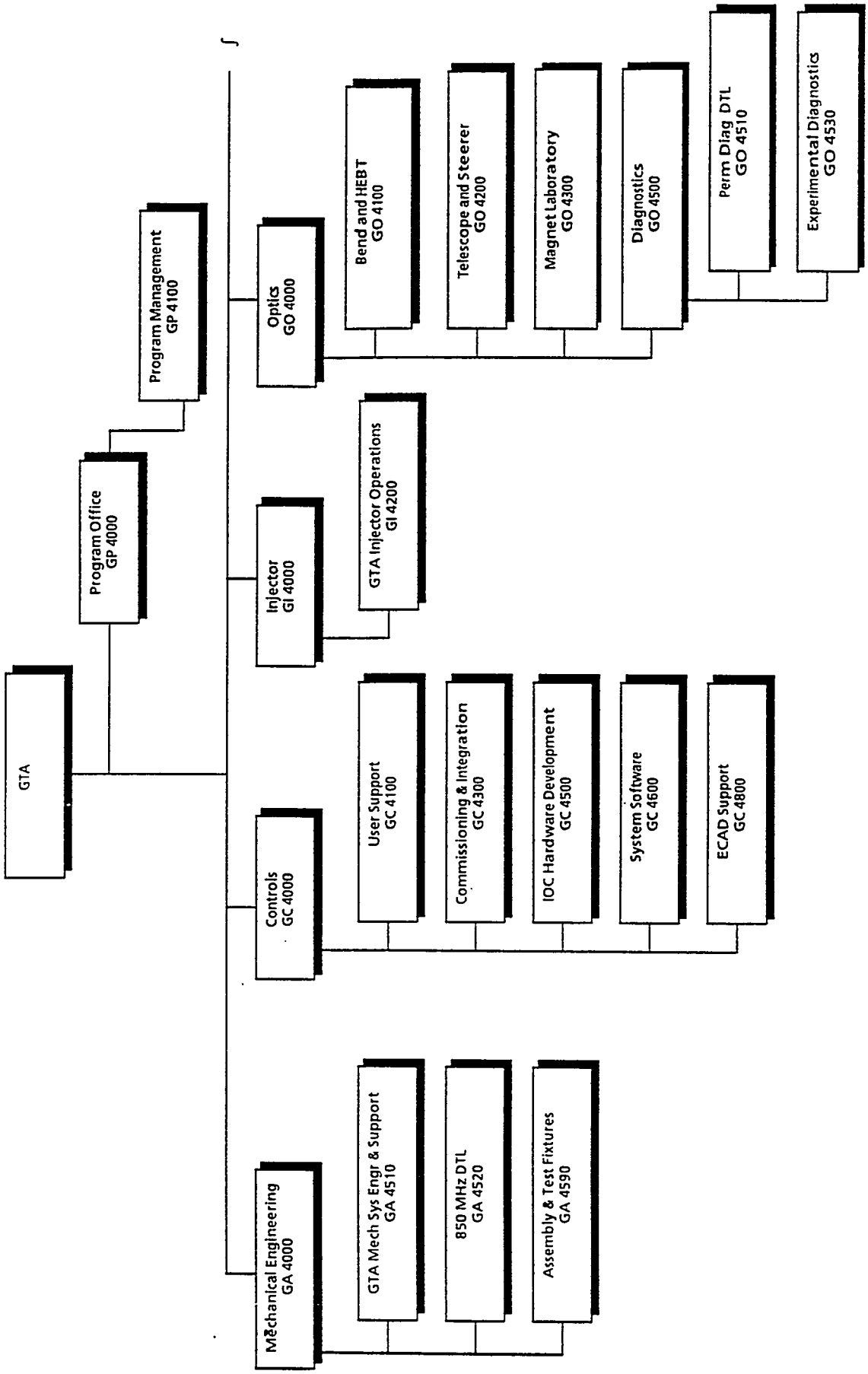

Fig. 4-14. GTA work breakdown structure.

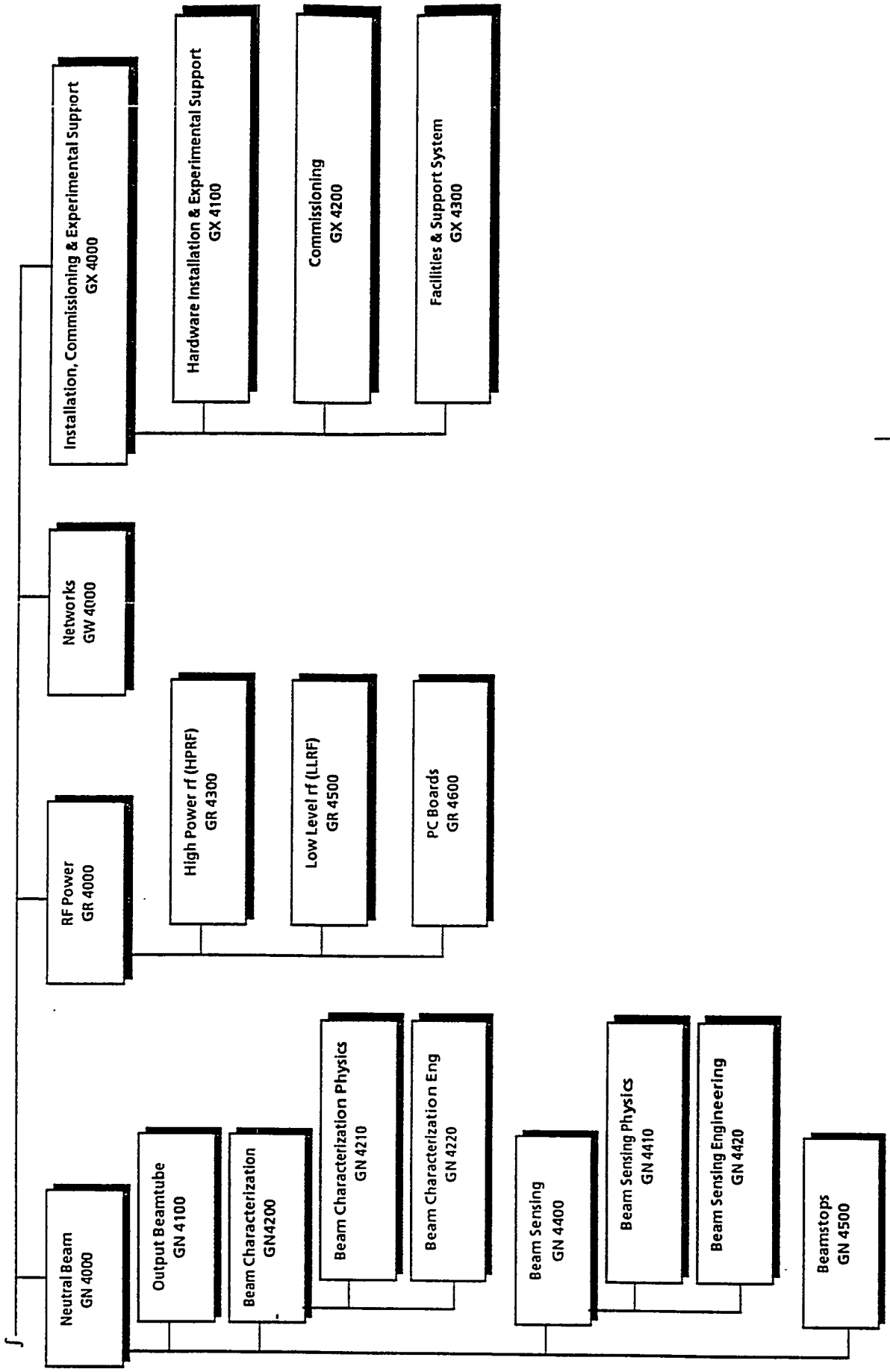

Fig. 4-14. GTA work breakdown structure (concluded).

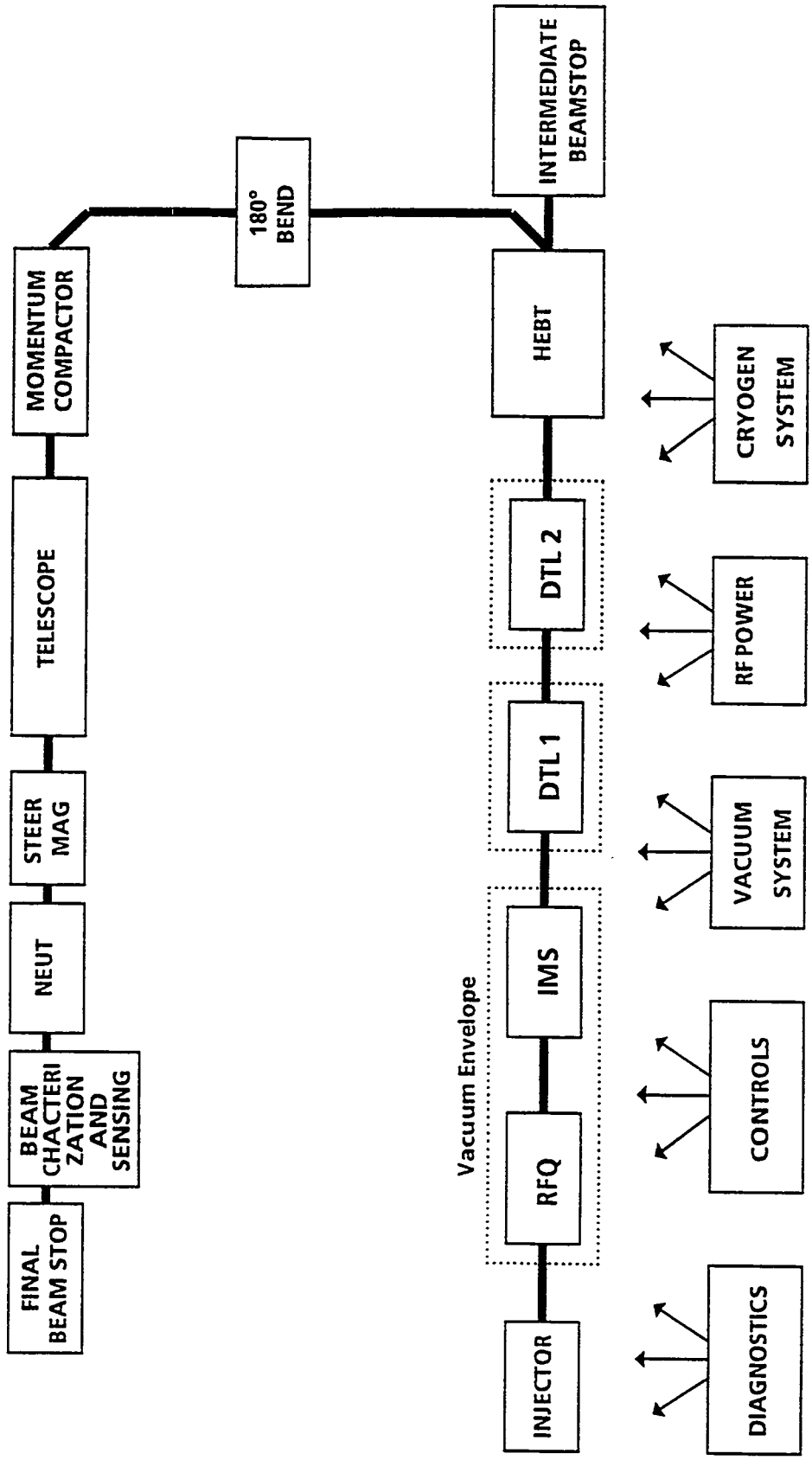

Fig. 4-15. Configuration for 24 MeV.

The injector provides a 60-mA peak H^- beam at an energy of 35 keV and at variable duty factors up to 2%. The injector is operated under computer control. Figure 4-16 shows a block diagram of the major components and interfaces, and Fig. 4-17 is a schematic of the hardware for the high-voltage dome and the injector. Figure 4-18 is a plan view of the injector, and its associated utilities, installed in the accelerator tunnel.

The major subsystems that constitute the injector are the high-voltage equipment dome, the ion source, the low-energy beam transport (LEBT) system, beam diagnostics, the vacuum subsystems, the ground-level electronics, and the control and automation system.

The high-voltage equipment dome is an electrically isolated, caster-mounted safety enclosure, which contains the high-voltage power supplies, the voltage regulators, the equipment racks that house the ion-source power supplies, the isolation transformer, and the control equipment needed to operate these systems. The I&C equipment in the dome is connected to the control room by fiber-optic cable. As shown in Fig. 4-19, the safety enclosure has a single-point ground at the facility building. The ground connection to the injector is a permanently installed, single-point ground between the facility grounding line and the grounding terminal on the safety enclosure. This ground connection is made by a 20-ft length of 2/0 welding cable and will move with the injector when it is moved. The source of the 35-kV high voltage is a 60-kV Glassman power supply that is housed in the high-voltage dome. It powers the 4PR250C regulator tube.

The safety interfaces for the GTA injector refer to the areas where either the injector acts as an agent in the safety systems of other parts of the accelerator or where the injector itself has safety hazards that must be recognized and addressed by other operations. If there is a trip of the radiation personnel safety system (RPSS), a beam plug is inserted in the LEBT and, through interaction with the safety control box, the extractor pulse is inhibited, turning the beam off at the source.

A surface-plasma ion source, which is mounted on a suitable high-voltage insulator, provides the H^- beam. A high-voltage safety shroud is mounted between the safety enclosure and the ion-source mounting plate to protect personnel from both the 35-kV high voltage on the source and from the high-power arc leads that drive the source.

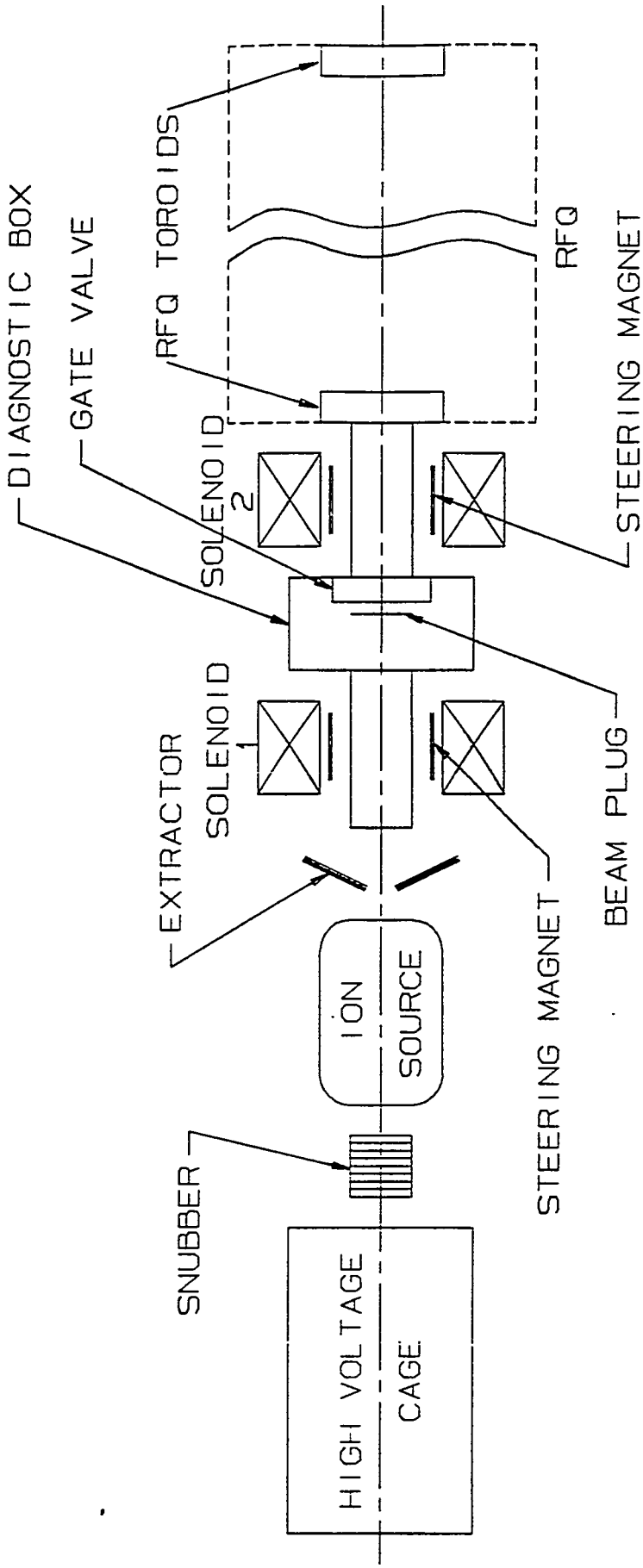

Fig. 4-16. GTA injector block diagram.

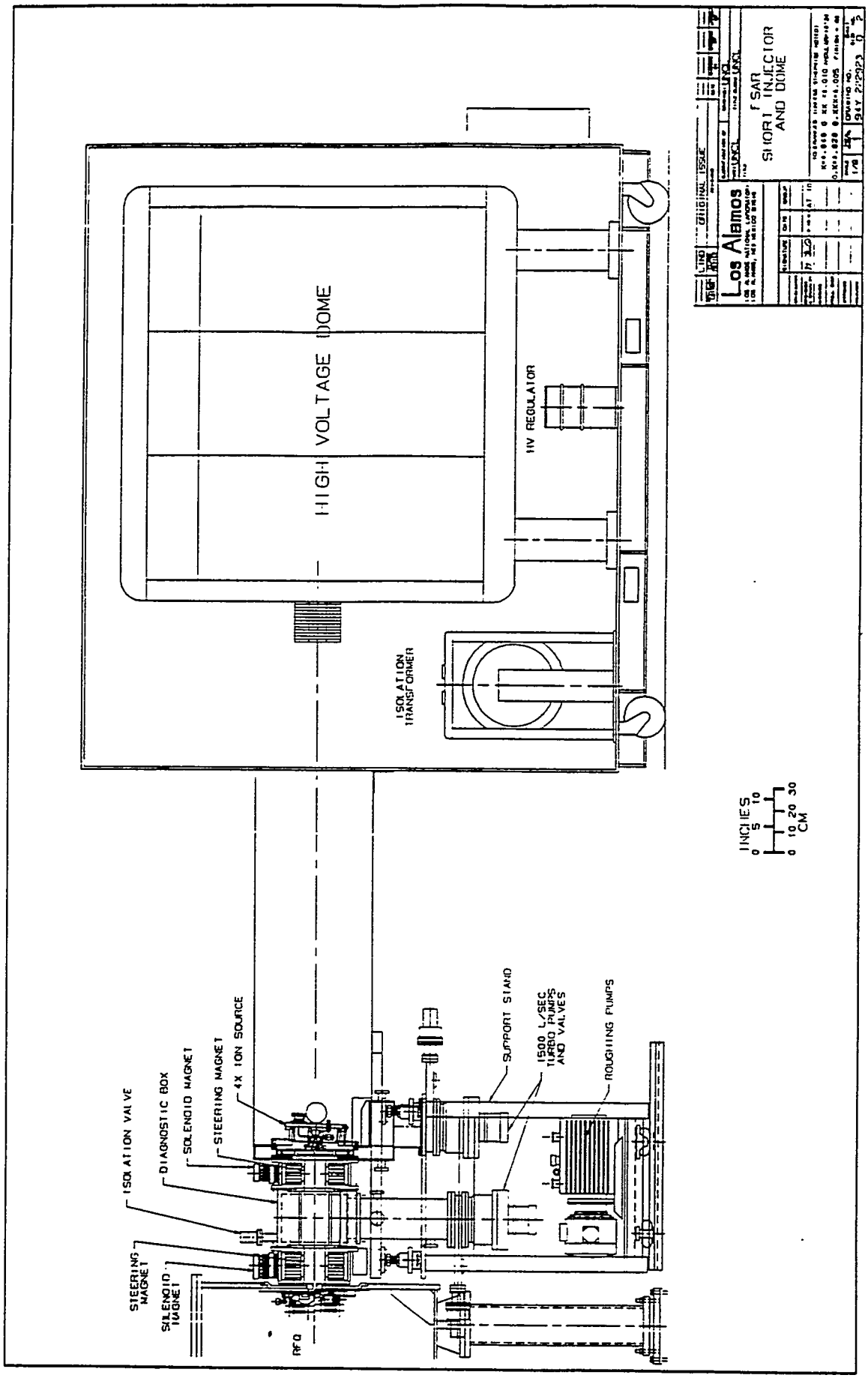

Fig. 4-17. HV dome and injector.

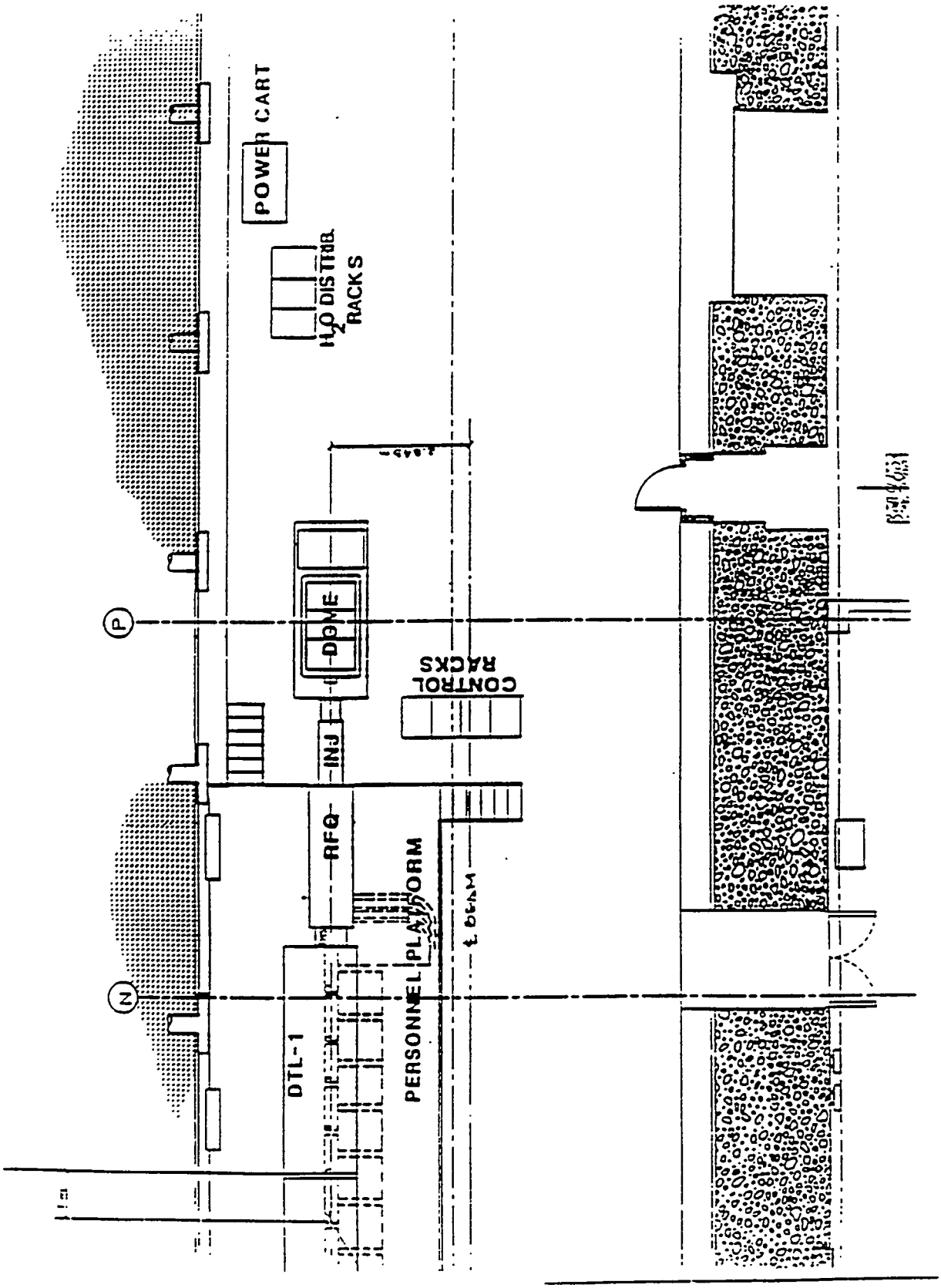

Fig. 4-18. Plan view of the injector.

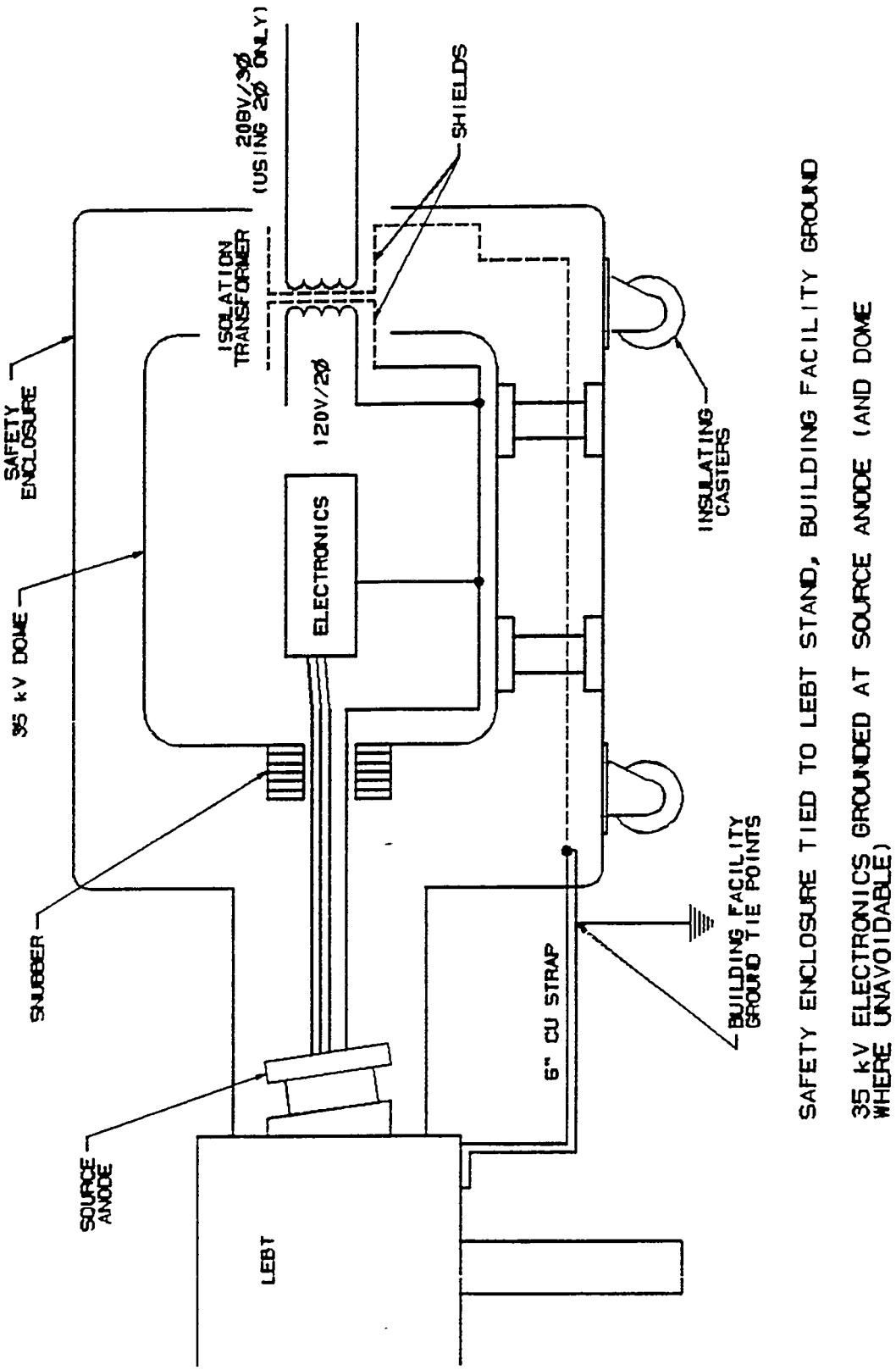

Fig. 4-19. Injector grounding plan.

The LEBT is a conventional, magnetic-focusing beam transport system used to transport and match the H^- ion beam produced in the ion source to the RFQ accelerator. Aside from low voltage (25 V) and high-current magnets (500 A maximum), this system has no significant safety hazards.

The GTA injector is equipped with adequate beam diagnostics to permit measurement of the beam current and beam emittance. The following beam diagnostic systems are present:

- beam current monitor—one insertable Faraday cup at the middle of the injector; and
- one emittance diagnostic station—in the middle of the LEBT.

The vacuum subsystem for the injector is an integral part of the beam-transporter system. It consists of high-throughput turbomolecular pumps with appropriate mechanical pumps backing each turbopump. The subsystem includes valves, gauging, and controls necessary to operate this system. The major effluent is hydrogen gas (a few sccm), which is vented from the mechanical pumps into the gas-venting system of the facility.

Six racks house the ground-level electronics and the computer control systems required for the injector.

The electrical and cooling interface requirements for the injector are provided by electrical and water distribution racks that are mounted near the injector as shown in Fig. 4-18. Compressed air is provided to power air-driven actuators in the LEBT.

The safety features for the off-line operation of the injector include an x-ray monitor, flashing operational-status indicators, access barriers, and radiation shielding. The x-ray monitor will be disabled when the injector is run during on-line operation when there are no personnel in the area.

4.2.1.2 425-MHz Radio-frequency Quadrupole - The RFQ serves three functions: it converts the continuous direct current beam from the injector into well defined ion bunches with a frequency of 425 MHz; it accelerates the 35-keV input beam to a focused output beam of 2.5 MeV; and it maintains transverse focusing of the beam.

Specially contoured quadrupole vanes in the RFQ progressively bunch and accelerate the beam.

Cryogenic cooling lines penetrate the vacuum envelope housing the RFQ and lead to a manifold. Flexible cooling lines lead from the manifold to the individual cooled accelerator components. Cooling lines are attached to the components by means of mechanical and brazed joints.

Figure 4-20 shows a generic RFQ and how the continuous beam from the injector is converted into a well-defined bunched beam at the exit. Figure 4-21 shows the RFQ as it will be placed in the GTA system. The RFQ assembly is mechanically isolated from the vacuum envelope and is fastened directly to the floor of the accelerator hall. Flexible bellows provide the necessary vacuum seals and mechanical isolation. This permits independent adjustment of the RFQ beam line.

RF power lines are also brought in through bellows seals and are mechanically independent from the vacuum envelope.

4.2.1.3 425-MHz Intertank Matching Section - The IMS matches the beam output from the RFQ to the beam-input requirements of the DTL. The IMS consists of two cryogenically cooled, RF-powered, bunching cavities and numerous focusing and steering magnets as shown in Figs. 4-21, 4-22, and 4-23. The magnets provide steering in the transverse x-y plane and transverse focusing of the beam. These adjustments provide the steering and focusing required to match the beam to the proper input for the DTL. There is negligible energy gain in the IMS. Cryogenic-cooling lines penetrate the vacuum envelope and carry cryogenic GHe to cool the RF cavities.

The IMS is fastened directly to the floor and is mechanically isolated from the vacuum envelope. Flexible bellows provide the mechanical isolation and vacuum seal. Such independence permits easy mechanical alignment of the IMS line to the system beam line. RF power lines are brought in through bellow seals and are mechanically independent of the vacuum envelope.

4.2.1.4 850-MHz Drift-tube Linac - The DTL accelerates the bunched ion beams from an input energy of 2.5 MeV to 24.3 MeV. It consists of 10 cryogenic drift tube

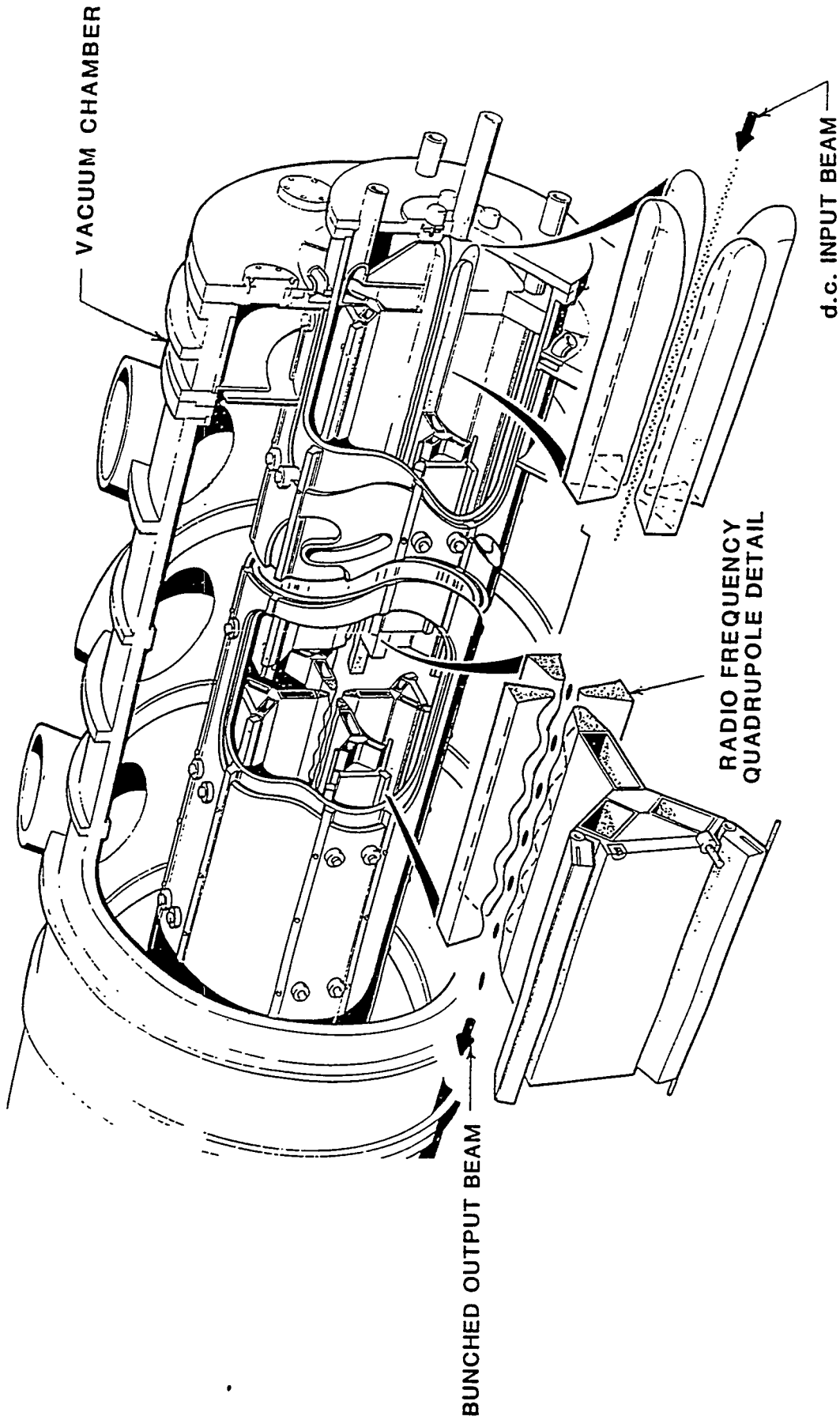

Fig. 4-20. Typical RFQ accelerator section.

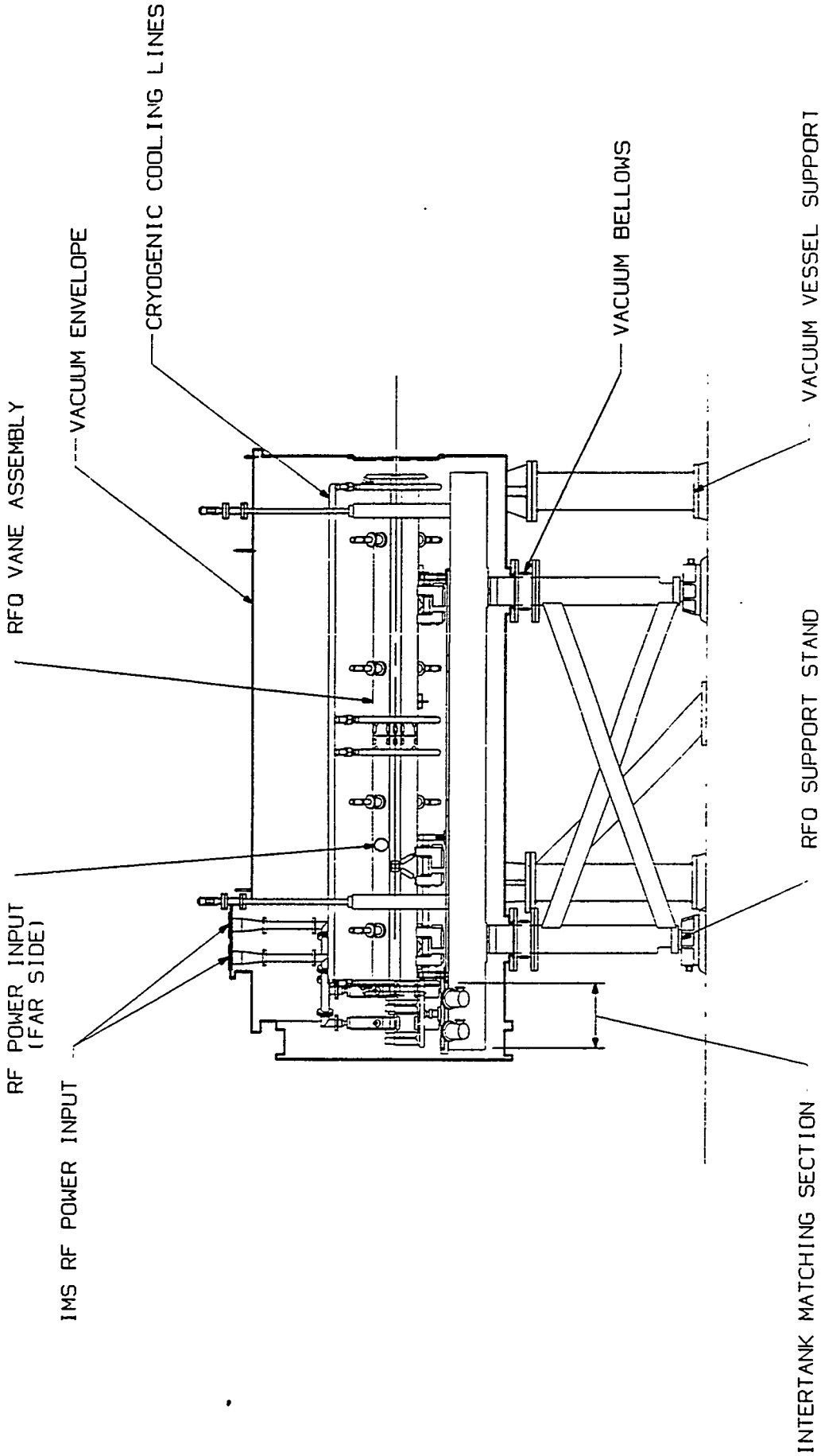

Fig. 4-21. Radio frequency quadrupole.

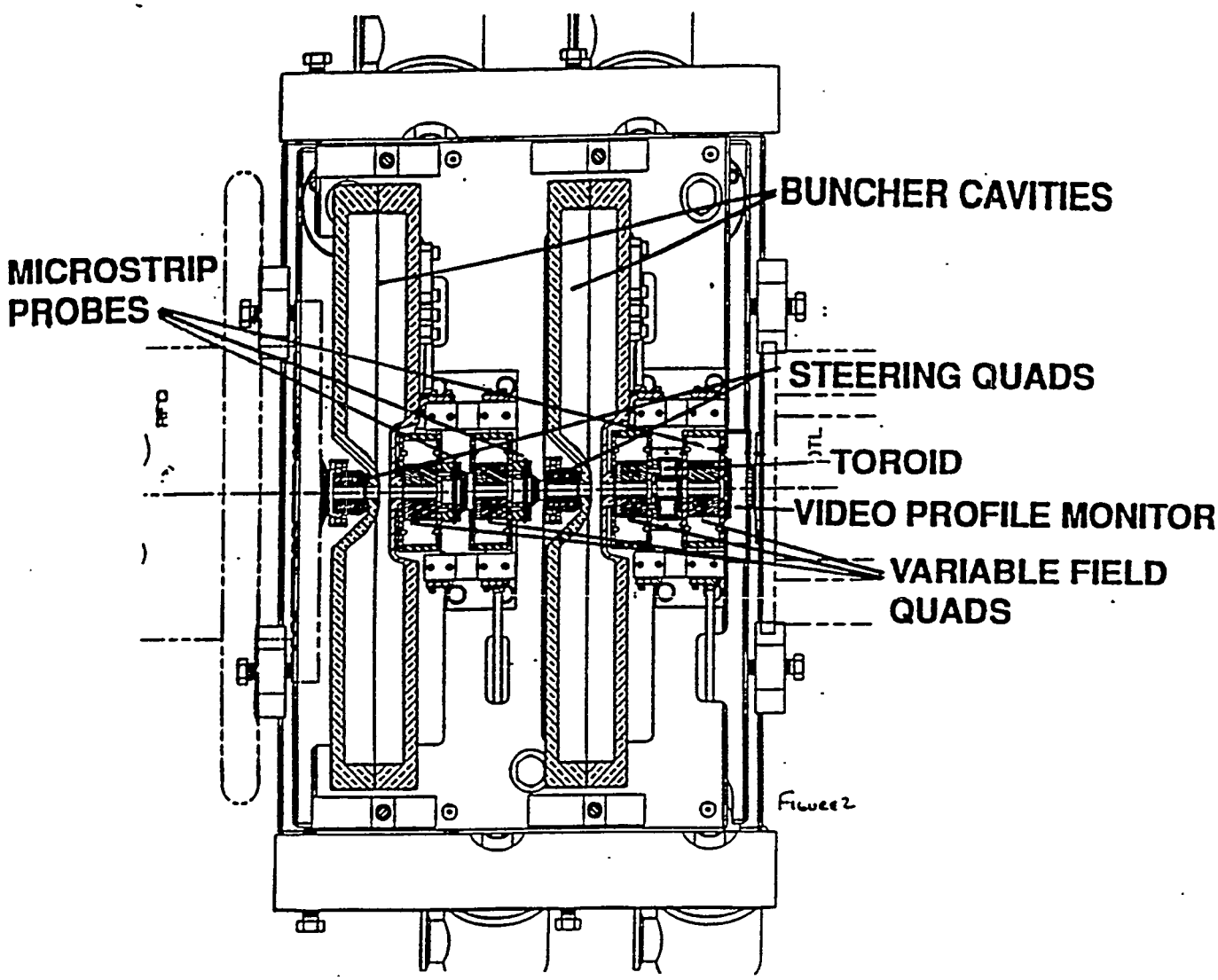

Fig. 4-22. IMS configuration.

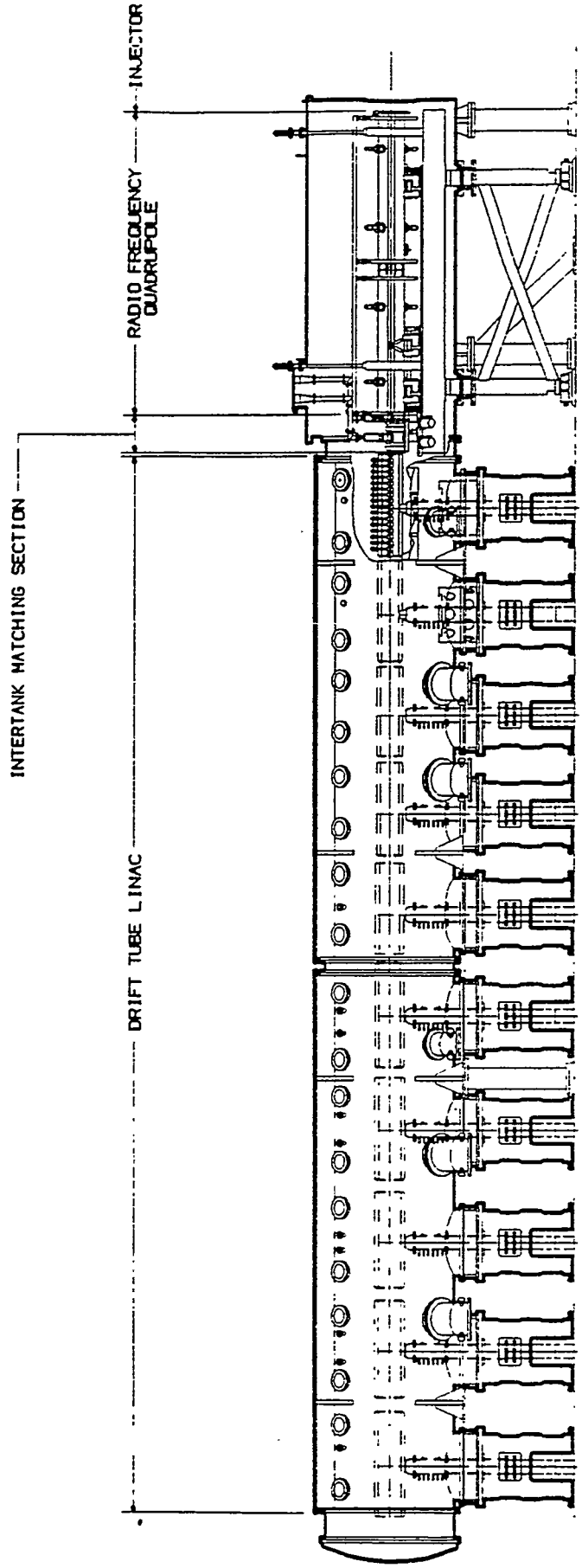

Fig. 4-23. The 24-MeV RFQ, IMS, and DTL systems with vacuum envelopes.

modules housed in two vacuum tanks (Fig. 4-24). The DTL modules contain cryogenically cooled drift tubes. The RF fields between the drift tubes are alternately accelerating and decelerating for the ion bunches. Ion bunches from the RFQ are timed to arrive at the interdrift tube spaces when the fields are accelerating. During the decelerating part of the cycle, the ion bunches drift through the interior of the drift tube and are not decelerated. Permanent magnet quadrupoles keep the beam focused during transport and accelerations.

Cryogenic cooling lines penetrate the vacuum envelope and transport GHe to cool the DTL support structure and the drift tubes. The cooling lines are fastened to the drift-tube module and the drift tubes by mechanical, welded, and brazed seals.

The DTL modules are independently fastened to the concrete floor and are independently aligned to the accelerator axis. Flexible bellows provide the vacuum seal between the vacuum envelope and the support structure. RF transmission lines are brought in through the vacuum envelope with bellows seals and are mechanically independent of the vacuum envelope.

4.2.2 Output Optics

The optics system consists of four subsystems:

- high energy beam transport line (HEBT);
- bend;
- telescope; and
- fast steerer.

Each subsystem uses temporary diagnostic systems during its commissioning, is designed to operate at a beam energy of 24 MeV, and is described below.

4.2.2.1 HEBT - The HEBT matches the beam from the DTL into the bend. The primary components of the HEBT are the spool piece assembly, the permanent magnet quadrupole Q1 and Q2, the 425-MHz dejitter cavity, four variable-field permanent magnet quadrupoles, and the tune-up beam stop. The HEBT is 1.18 m long, is mechanically isolated by a bellows, and is supported on a girder structure by two pedestals. (See Fig. 4-25.)

The spool piece attaches to the linac vacuum vessel, serves as the vacuum enclosure for Q1, and ends with a flange. Q1 is supported by a warm girder and is moveable; Q1

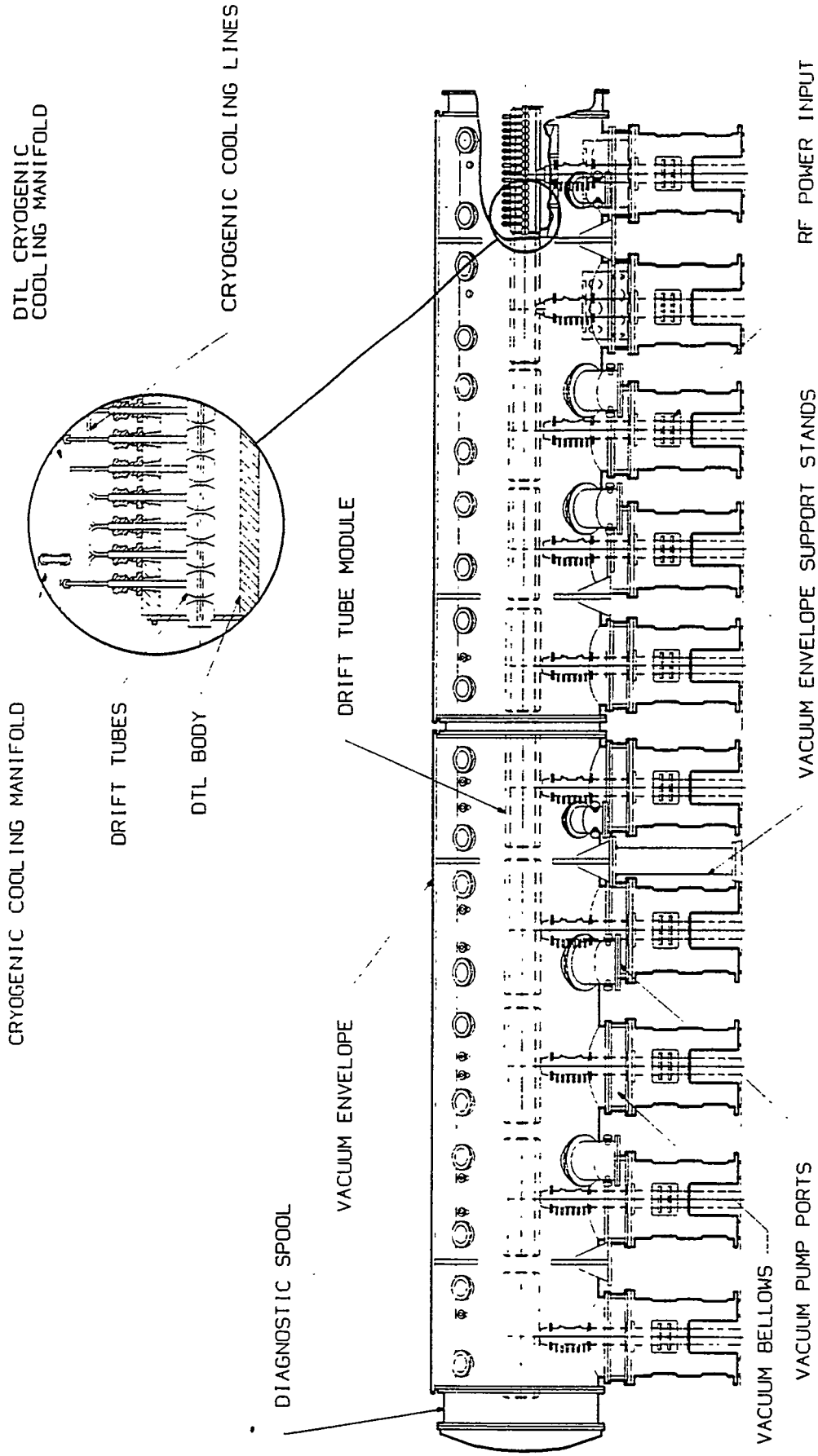

Fig. 4-24. DTL linac and vacuum system with diagnostic spool.

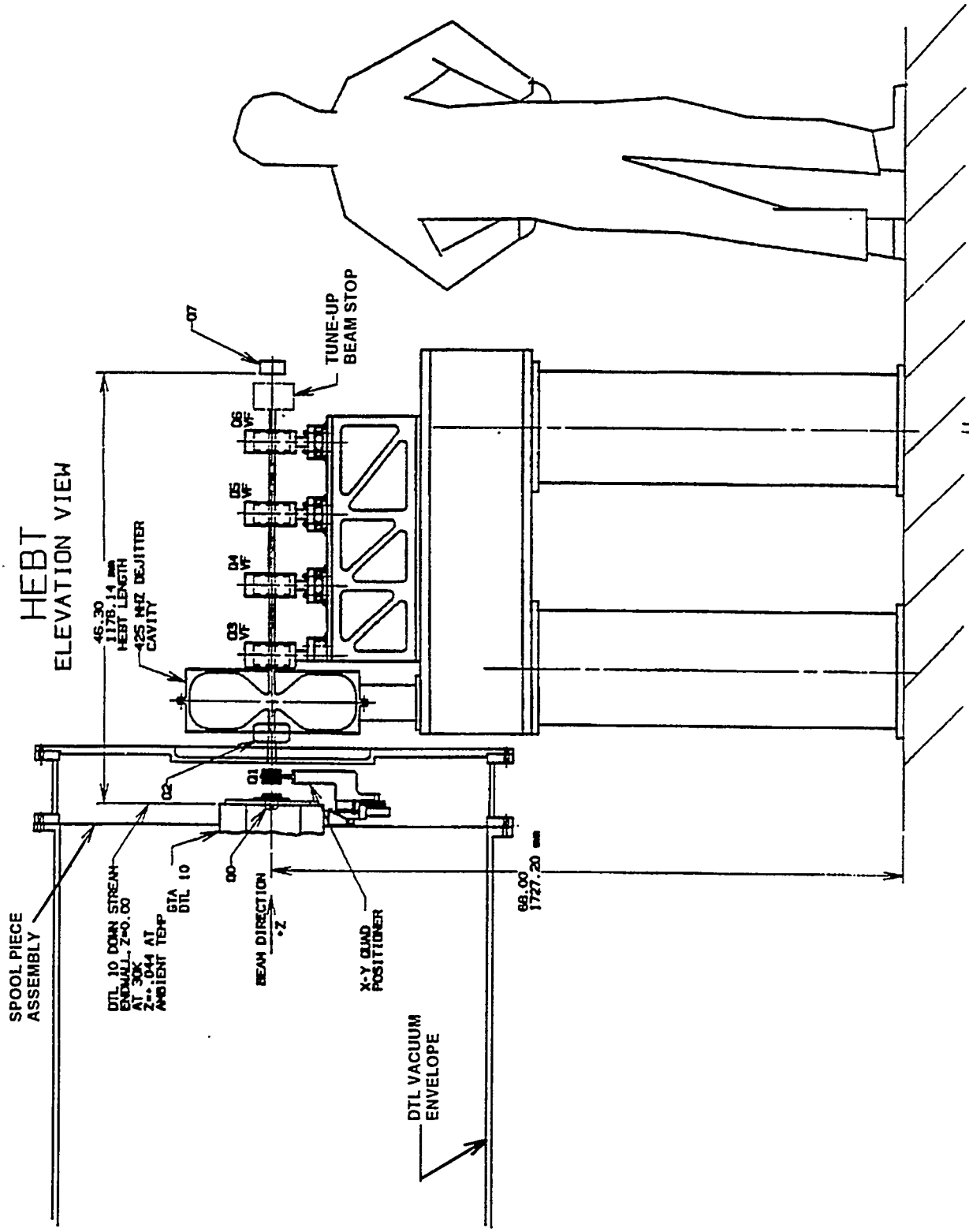

Fig. 4-25. HEBT configuration.

movement is guided by an x-y steerer. The spool piece also contains a toroid and a beam-position monitor as permanent diagnostics. Q2 is outside the vacuum envelope.

A 425-MHz RF dejitter cavity reduces the beam-energy fluctuations expected from the DTL, which would otherwise defocus the telescope-output beam. Stripline pick-ups in the HEBT and bend provide phase and amplitude signals for fast control of this cavity. The RF power supplied to the cavity is provided by a tetrode-driven power supply on the mezzanine and is less than 10 kW.

Four variable-field permanent-magnet quads (Q3-Q6) provide focusing to keep the beam confined laterally as it expands longitudinally. The quads are variable (by mechanical motion through motors that rotate permanent-magnet rings within the magnet structures) to enable an optimized match to the bend. A nominal 5/8 in. diameter stainless-steel tube runs through the quads to provide a vacuum barrier and a conducting path for the beam-image currents.

An insertable graphite beam stop will be installed after Q6. (This device is also known as the tune-up beam stop. See Fig. 4-25.) The beam stop will allow disposal of the beam when tuning the DTL as required. The stop is necessary, because the bend energy acceptance is inadequate to accommodate the beam energy variation during the tune up by the Δt method (in which RF power to successive tanks of the DTL is turned off). The beam stop will provide a source of radiation, but shielding is not required because of the low duty factor (<0.01%) needed during tune-up and the infrequent use of this mode. Cooling is done by radiation and conduction to the beam tube that, in turn, is cooled by convection.

HEBT permanent diagnostics consist of two toroids to measure current, a capacitive-beam probe for position measurement, a phase-spread monitor, and two microstrip probes for phase and position measurement. A beam-loss monitor detects gamma radiation from errant beam. It provides a signal to the fast-protect system within 7 μs, adequate to prevent component damage or melting of the beam tube if the beam is misdirected from the beam channel. Since the fast protect system is for machine (not personnel) protection, the gamma background level in the tunning during accelerator operation is not relevant to personnel safety. The monitor is set to trip fast protect before hardware damage due to a beam spill would occur. For this purpose, the design set point was established at 0.2 rad/s.

4.2.2.2 Bend - A diagram of the bend as a girder-mounted structure is shown in Fig. 4-26. Its purpose is to fold the NPB to decrease total length and increase mechanical

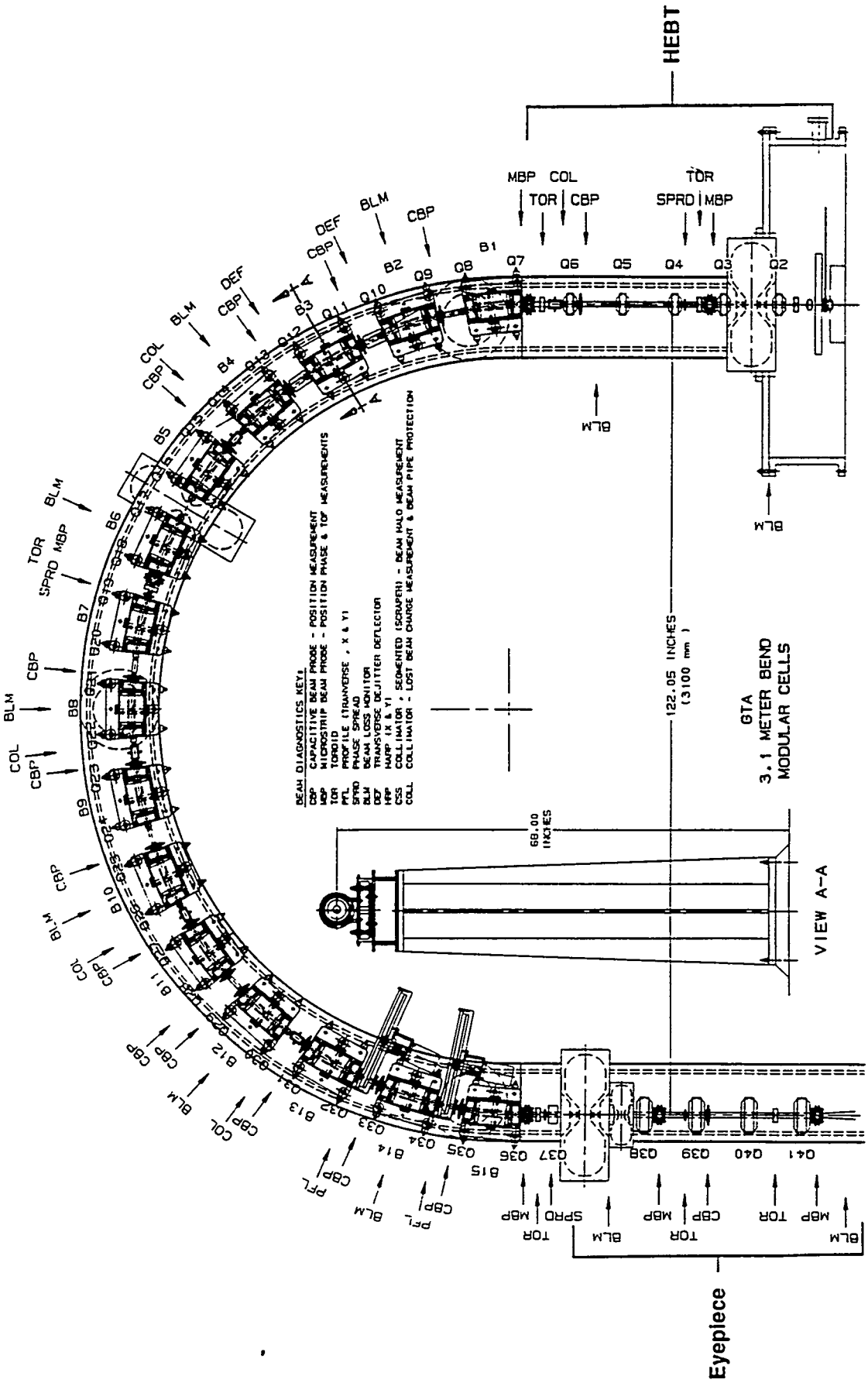
HEBT
Eyepiece
GTA
3.1 METER BEND
MODULAR CELLS
122.05 INCHES
(3100 mm)
68.00
INCHES
VIEW A-A
DEAM DIAGNOSTICS KEYS
CBP CAPACITIVE BEAM PROBE - POSITION MEASUREMENT
MBP MICROSTRIP BEAM PROBE - POSITION PHASE & TOF MEASUREMENTS
TOR TOROID
PFL PROFILE (TRANVERSE , X & Y)
SPRD PHASE SPREAD
BLM BEAM LOSS MONITOR
DEF TRANSVERSE DEJITTER DEFLECTOR
HRP HARP (X & Y)
CSS COLLIMATOR , SEGMENTED (SCRAPER) - BEAM HALO MEASUREMENT
COL COLLIMATOR - LOST BEAM CHARGE MEASUREMENT & BEAM PIPE PROTECTION

Fig. 4-26. Bend.

stability in a space application. The bend length provides a vacuum channel and drift space for longitudinal expansion of the beam pulse. The diameter of the bend is 3.1 m.

The bend deflects the beam through 180° in a roughly circular path by the successive deflections of a series of 15 permanent-magnet dipoles. The bend has a large energy acceptance—±1 MeV—substantially greater than the variation expected in normal operation—±0.05 MeV—because of this achromatic property.

The momentum compactor is comprised of two RF cavities, at the end of the bend. This assembly decreases the beam momentum spread by a factor of ~50 to decrease telescope chromatic aberrations in the output-beam divergence. The main cavity, the first harmonic, is driven at 425 MHz and dissipates ~100 kW of RF power. The small cavity provides second-harmonic linearization of the RF wave form. This cavity resonates at 850 MHz and requires about 5 kW of power. Both cavities are driven by a tetrode supply through coaxial cable. Outputs of two microstrip phase-measurement probes, located in the eyepiece, are used to synchronize the beam and RF phases to guarantee energy stability.

The bend diagnostics are shown in Fig. 4-26. A beam-position monitor is located in each of the 15 periods. Fifteen electromagnetic steerer magnets, in the bore of each dipole, are used to center the beam in the monitors. The steerers are windings etched in a 0.015 in. copper sheet and use up to 5 W of power, running in a pulsed mode, with a correction capability of 2 mrad. The steerers are conduction and convection cooled. If the bend-magnet alignment tolerances of ±0.1 mm in transverse position are achieved, the combination of steerers and position monitors are adequate to maintain beam position to within 1 mm of the bend axis. The bend also contains a transverse-jitter control system, which consists of four fast electrostatic deflectors and four dedicated position monitors. Two phase-spread monitors and two toroids monitor the beam longitudinal spread and current, respectively.

Eight beam-loss monitors provide signals to the fast-protect system. Profile measurements are planned at two positions by means of flying-wire scanners.

4.2.2.3 Telescope - The telescope expands the output beam from the bend to produce the desired decrease to beam divergence. It may be divided into two parts named in analogy to an optical telescope. After the bend, the beam first encounters the "eyepiece,"

which diverges the beam. The beam then enters a drift region followed by the "objective." The objective focuses the beam to a minimum divergence by three large-bore quadrupole lenses. The telescope is ~11 m long and has a clear bore of 50 cm in the objective. Other devices in the telescope include correctors of geometric aberrations, steering focus correction, beam collimation, and diagnostic devices. A sketch of the telescope is shown in Fig. 4-27.

The eyepiece is nominally 1 m long and consists of four variable-field permanent-magnet quadrupoles, which expand the beam. Two Lambertson-type steerer magnets direct beam along the telescope axis. The eyepiece diagnostics are shown in Fig. 4-26. Energy and phase measurements are done by two microstrip-probe pickups and regulate the momentum-compactor phase in a closed-loop feedback system. The eyepiece also contains a toroid, a beam-position monitor. A beam-loss monitor is located near the eyepiece to detect beam spill.

A 5 m expansion region follows the eyepiece. A fast-corrector magnetic lens in this area has a maximum power consumption of only 4 W; therefore, it needs no active cooling. The expansion region also contains the first of four corrector-magnet packages. The corrector packages each contain eight Lambertson-type magnets. The very end of the region contains two harps for beam-profile measurement, and a collimator (or scraper), which limits the beam to a transverse-size consistent with clear passage through the objective. The collimator is shown in Fig. 4-28 and consists of eight fixed graphite tiles contoured to the expected beam profile. The collimator is conductively cooled and will provide a source of radiation.

The objective consists of three distinct magnetic quadrupole lenses. Each lens may be divided into half-meter long cylindrical segments. Each segment contains 24 capsules distributed azimuthally around the lens periphery. The capsules each contain a row of permanent-magnet blocks which are thermally isolated from the capsule walls. A vacuum is established in each capsule by initial pumpout to enhance the thermal isolation. The capsules are anchored to a composite-material beam tube through a longeron and rib structure. Corrector packages are mounted over the first and second objectives and between the second and third objectives. The corrector packages will use ~100 W of power and be water cooled. Radiation from beam loss in the objectives is expected to be

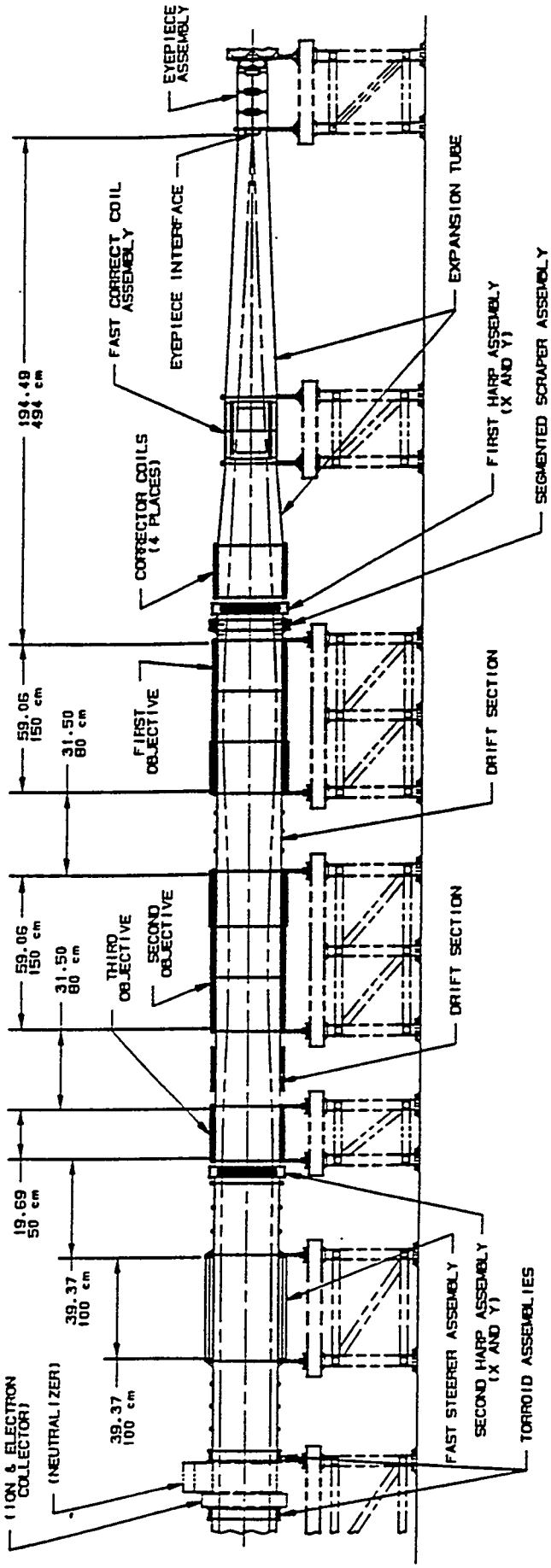

Fig. 4-27. Telescope.

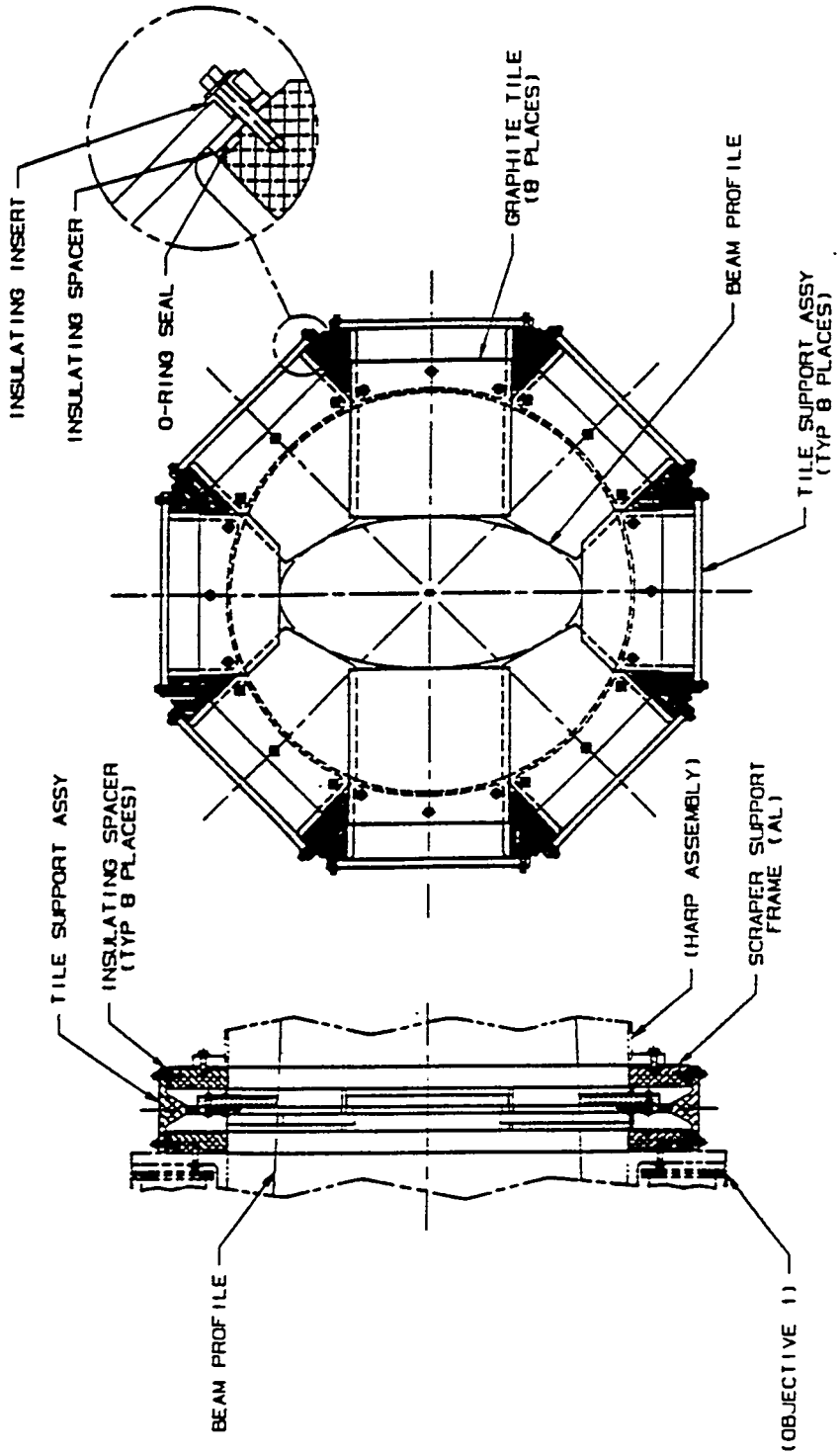

Collimation at 2σ

Fig. 4-28. Collimator.

small because of the collimation before the objectives. Beam diagnostics in the objective consist of a harp assembly at the objective end.

4.2.2.4 Fast Steerer - A dipole magnet capable of rapid slew rates is placed after the telescope. (See Fig. 4-27.) Its purpose in a space application is to precisely direct the beam on a target. It consists of a dielectric cylinder nominally 1 m in length and 70 cm o.d. with grooves milled in its outer surface in a pattern appropriate for production of a very high-quality dipole field. The grooves contain a stainless-steel tube through which water flows for cooling. A braided copper conductor fills the remainder of the grooves. The magnet is driven by a special power supply capable of four-quadrant operation. Peak power consumption is ~10 kW.

To maintain the field precision needed under varying environmental conditions, the steerer requires both quadrupole and sextupole correction. A set of single filament windings are provided on an external shell and are driven by appropriate power supplies to track the dipole field. Two additional quadrupole windings are provided at opposite ends of the magnet to complete the fast-focus correction system. These must be driven as the square of the steering angle. These correctors will consume less than 10 W of power.

Steering is in the horizontal plane with an extent of 1.25° to beam line left and 0.125° to the right. The neutral beam line is configured to be noninterceptive at these angular extremes.

4.2.2.5 Beam Stops - The beam stops for the 24-MeV accelerator beam experiments are the intermediate and final beam stops. The intermediate beam stop is a movable beam stop mounted on a stand and will be used to absorb the beam energy just down stream of the DTLs and again at the exit of the 180° bend during commissioning. The first use of this beam stop is in the 2D experiments. The final beam stop is at the exit of the large beam transport tube, which contains the steering magnet, WAFFOG equipment, and beam-sensing hardware. Both beam stops are cooled by the ambient air surrounding the accelerator system. The design requirements for the beam stops are shown in Table IV-4.

4.2.2.5.1 Intermediate Beam Stop - This beam stop uses a SiC-coated graphite plate to absorb the beam energy. The plate is ~11 in. wide and 20 in.

Table IV-4 Design Requirements for Beam Stops

	Intermediate Beam Stop	Final Beam Stop
Energy	24 MeV	24 MeV
Current	50 mA	50 mA
1 Sigma Radius	2 cm	12.5 cm
Rep-Rate	1 Hz	1 Hz continuous 10 Hz for 30 min
Pulse Width	0.002 sec	0.002 sec
Duty Factor	0.2%	0.2% CW 2% for 30 min.
Beam Footprint	3 Sigma @ Stop	3 Sigma @ Stop
Steering Angle		+1.25, -.125

long and is inclined 30° to the beam axis to spread the beam energy density. The energy absorbed in the plate is thermally radiated to the walls of the vacuum vessel that enclose the plate. The vacuum vessel is an aluminum cylinder about 16 in. in diameter and has cooling channels on the outer surface of the cylinder. Ambient air is sucked through the channels by a blower, which maintains the vacuum vessel at a maximum temperature of 110°F. Discharge air from the blower is routed to the tunnel-venting system.

A drawing of the vacuum vessel with the enclosed beam stop plate is shown in Fig. 4-29.

The beam-stop vacuum vessel is encased in a casket lined with 1 in. of lead to reduce the radiation-dose rate to the surrounding area. Neutronic calculations of this shielding design indicates a dose-equivalent rate at 1.7 m from the source, to be 50 mrem/hr 10 min after shutdown and 1 mrem/hr 4 hr after shutdown.

The instrumentation necessary for monitoring the operation of the beam stop is

- thermocouples to measure temperatures of the graphite plate, the vacuum vessel, and the cooling air;
- a flow meter to measure the cooling air-flow rate;
- pressure sensors to measure the pressure level in the cooling-flow system;
- IR camera to measure the beam footprint size, location, and plate surface temperature; and

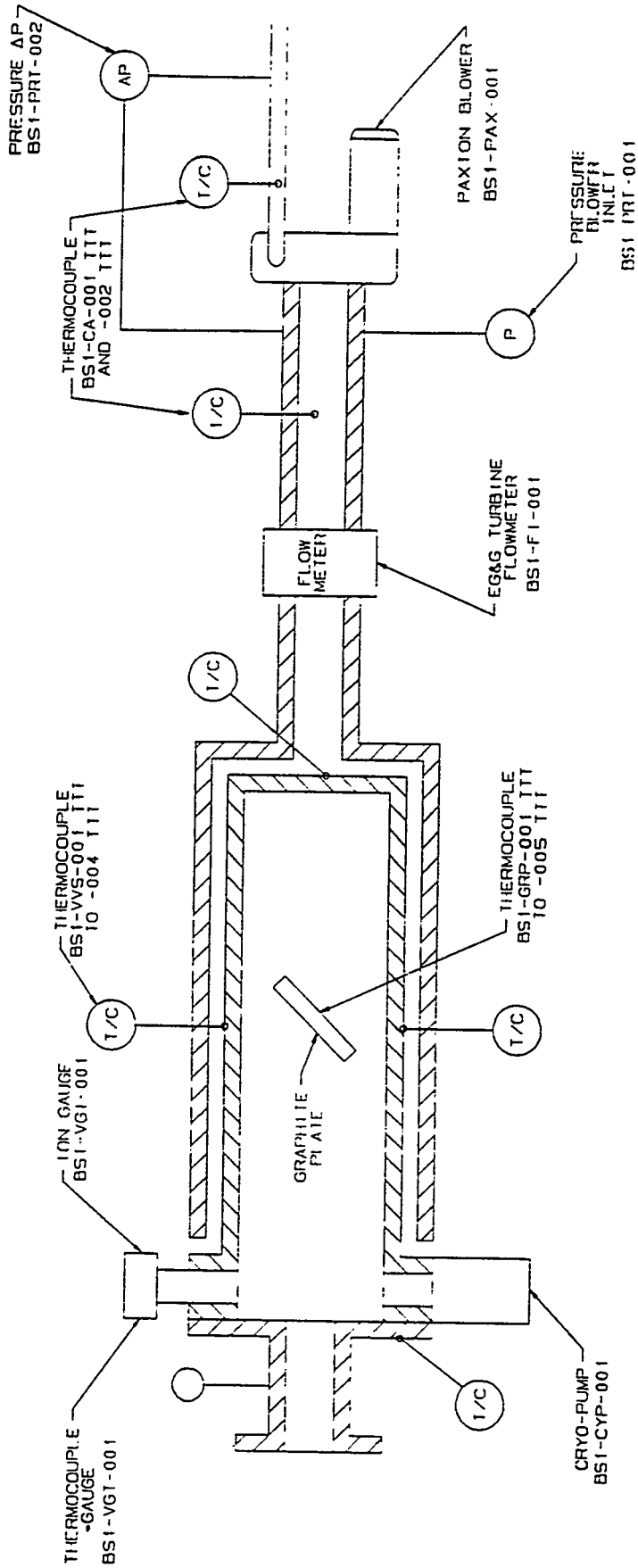

Fig. 4-29. Intermediate beam stop.

- ionization and thermocouple gauges to measure the vacuum level in the vacuum vessel.

Several of the above instruments can be used to protect equipment by preventing operations that would exceed the beam-stop design limits. If, for example, the flow-meter value falls below a specified quantity or a thermocouple exceeds a temperature limit, an alarm or interlock shall be used to shut off the beam.

4.2.2.5.2 Final Beam Stop - In the conceptual design for the final beam stop, a plate of sufficient mass and specific heat to absorb the beam energy and not exceed temperature or thermal radiation limits, is used. The design requirements are for the worse-case scenario of 30-min operation at 10 Hz. The conceptual design uses a 6-in.-thick aluminum plate of sufficient dimension in the x-y plane to accommodate the beam slew. The high thermal conductivity of aluminum allows the beam energy to spread to larger areas of the plate than the footprint, which helps reduce the plate's maximum operating temperature. During the heat-up process, the plate thermally radiates the energy to the beam-tube walls that are cooled by natural convection to the air in the tunnel. After the 30-min run, the beam-stop plate is allowed to cool before the next run. Preliminary calculations indicate that the maximum plate temperature at the center of the footprint is approximately 330° C.

The beam-stop plate is supported on a frame structure in the beam-tube end closure. The plate is electrically insulated so that the beam current can be measured.

Neutronic calculations on the radiation dose-equivalent rate have been made on a final beam stop operating at a lower current level than the GTA beam stop. These data were scaled to the GTA current levels to predict radiation dose-equivalent rates for the GTA beam stop. At a distance of 1.7 m from the source, the dose-equivalent rates predicted were 37 mrem/hr 10 min after shutdown and 12 mrem/hr 12 hrs after shutdown. No shielding was used in these calculations.

Thermocouples will be used to measure the beam-stop plate temperature at several locations. Thermocouple temperatures exceeding specified design limits will be used to shut down the beam to protect the equipment.

4.2.3 Neutral Beam System

The neutral beam system, which starts downstream of the steering magnet, is shown in Fig. 4-30. The main components are:

- wire and fluorescent fiber offset grid (WAFFOG) assembly;
- pinhole plate station;
- sweep magnet;
- detector station; and
- corresponding vacuum enclosure vessels.

All of the components, except WAFFOG, will be commissioned during Experiment 3B. At that time, they will be used to characterize the telescope and the fast steerer. WAFFOG will be commissioned for Experiment 3C. The beam energy for the neutral beam will be 24 MeV; the pulse frequency, however, will be reduced by a factor of 100, from 10 Hz to 0.1 Hz. This represents an average current of 10 μA and corresponds to 240 W average power dissipation in the characterization beam stop. The only other deviation from the normal GTA parameters is that the steering angles used in Experiment 3B will be 1.25° to the left and 0.125° to the right of beam center.

4.2.3.1 WAFFOG Experimental Assembly - WAFFOG is the beam direction sensing method used in GTA. Contained in a large vacuum vessel just after the beam expanding telescope and steering magnet, WAFFOG consists of a set of three .003-in. upstream wires, which scatter beam particles and cast shadows downstream on a set of fluorescent ribbons. The fluorescence is picked up by a set of cameras mounted around the periphery of the WAFFOG framework, but inside the large vacuum vessel.

Materials used in WAFFOG are the graphite-epoxy composite framework, the tungsten wires, and the fluorescent strip coated with praseodymium doped gadolinium oxysulfide (Pr:Gd O_2S). The total mass exposed to the beam is only a few grams (e.g., the wires and the ribbons). Gd O_2S is a ceramic-like material. The temperatures reached by full beam exposure will be ~200°C because of the thin material, and the beam's limited energy loss in penetrating these materials.

4.2.3.2 Pinhole Plate Station - The pinhole plate station is a vacuum vessel, which contains the hardware that the beam first contacts during characterization of the

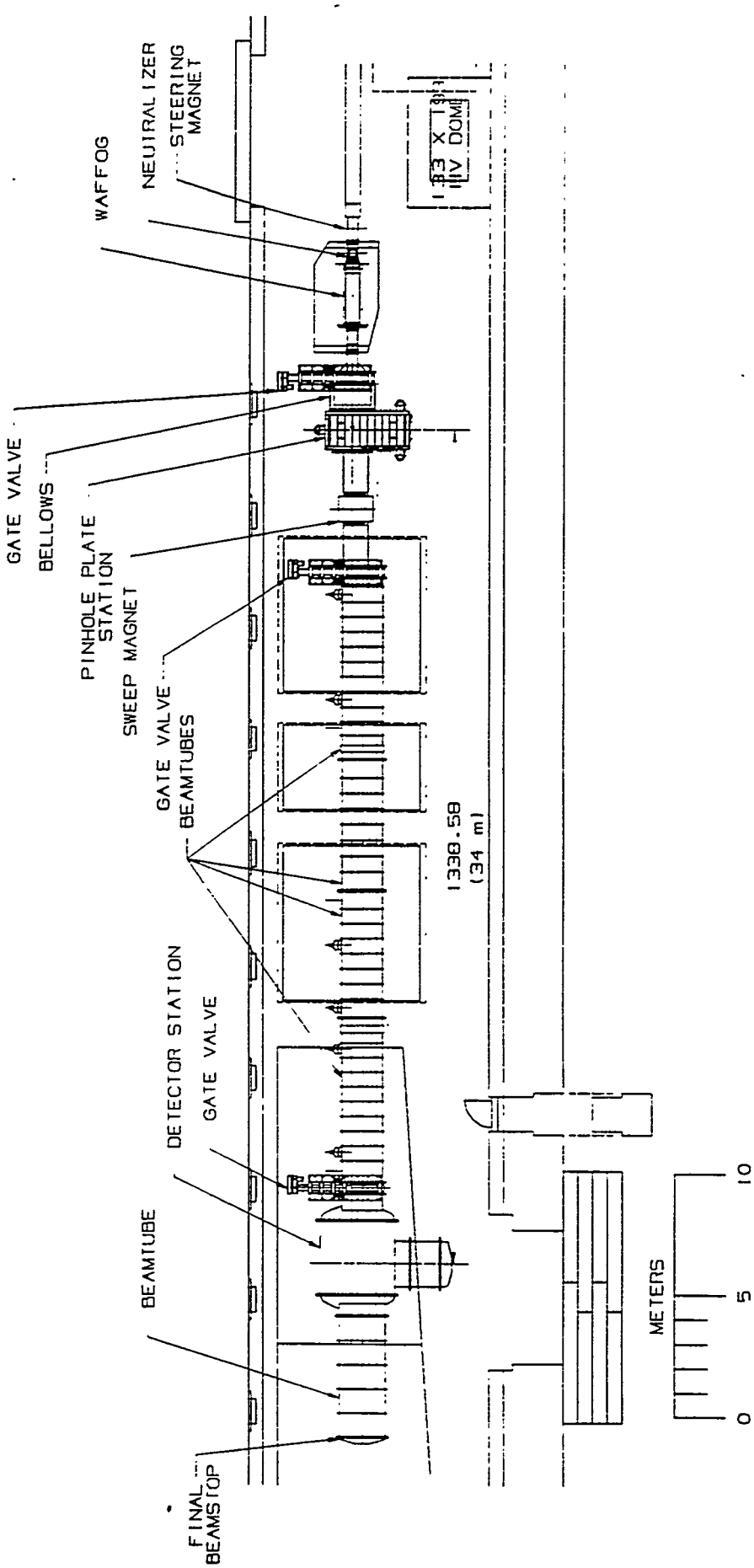

Fig. 4-30. Neutral beam.

telescope and fast steerer. From here the beam continues through the sweep magnet and on to the detector station. (See Fig. 4-30.)

The hardware within the pinhole plate station consists of:

- characterization beam-stop assembly;
- aberration pinhole plate assembly;
- divergence pinhole plate assembly; and
- translation/positioning hardware.

This hardware stops the greater part of the incoming H^- beam and conditions the pinhole beamlets for characterization purposes. The characterization beam stop (see Fig. 4-31) is composed of three parts: the support and cooling plates, and the graphite tiles. It is designed to absorb most of the beam while allowing a minor portion to pass downstream through holes in the assembly. The supporting member is an aluminum plate ~45 in. by ~about 45 in. by 1-in.-thick with a 24-in. diameter hole in the middle. Fastened to the upstream side of the support plate is the circular cooling plate with 685 holes in it that are 0.300-in. diameter. The holes provide clearance for the beamlets, which are created by the graphite tiles. The plate is cooled by water, from a stand alone water-cooling system, that passes through a channel on its downstream side. (See Section 4.2.3.6.) Finally, fastened to the upstream side of this plate are a number of graphite tiles that are 0.375-in. thick. These tiles stop 91% of the beam while allowing 9% to pass through the 0.223-in. diameter holes unobstructed. The heat generated is dissipated chiefly by radiation to the cooling plate and to the walls of the vacuum enclosure.

Both pinhole plates use the beamlets produced by the characterization beam stop to produce accurately sized pinhole beamlets, which are precisely spaced and partially neutralized. The pinhole beamlets are created by small inserts in the support plate, which have neutralizer foils over the upstream side of the insert. One plate, however, is used for characterizing beam aberrations; while the other is used for beam divergence. The major difference between the two is in the patterns and size of the beamlets that go through each plate (Fig. 4-32). Each assembly consists of a support plate similar to that used with the beam stop and a pinhole plate. The pinhole plate houses the pinhole inserts, which differ for each assembly. The divergence pinhole plate uses some graphite tiles, similar to those for the beam stop, which absorb the beamlets not used for these measurements.

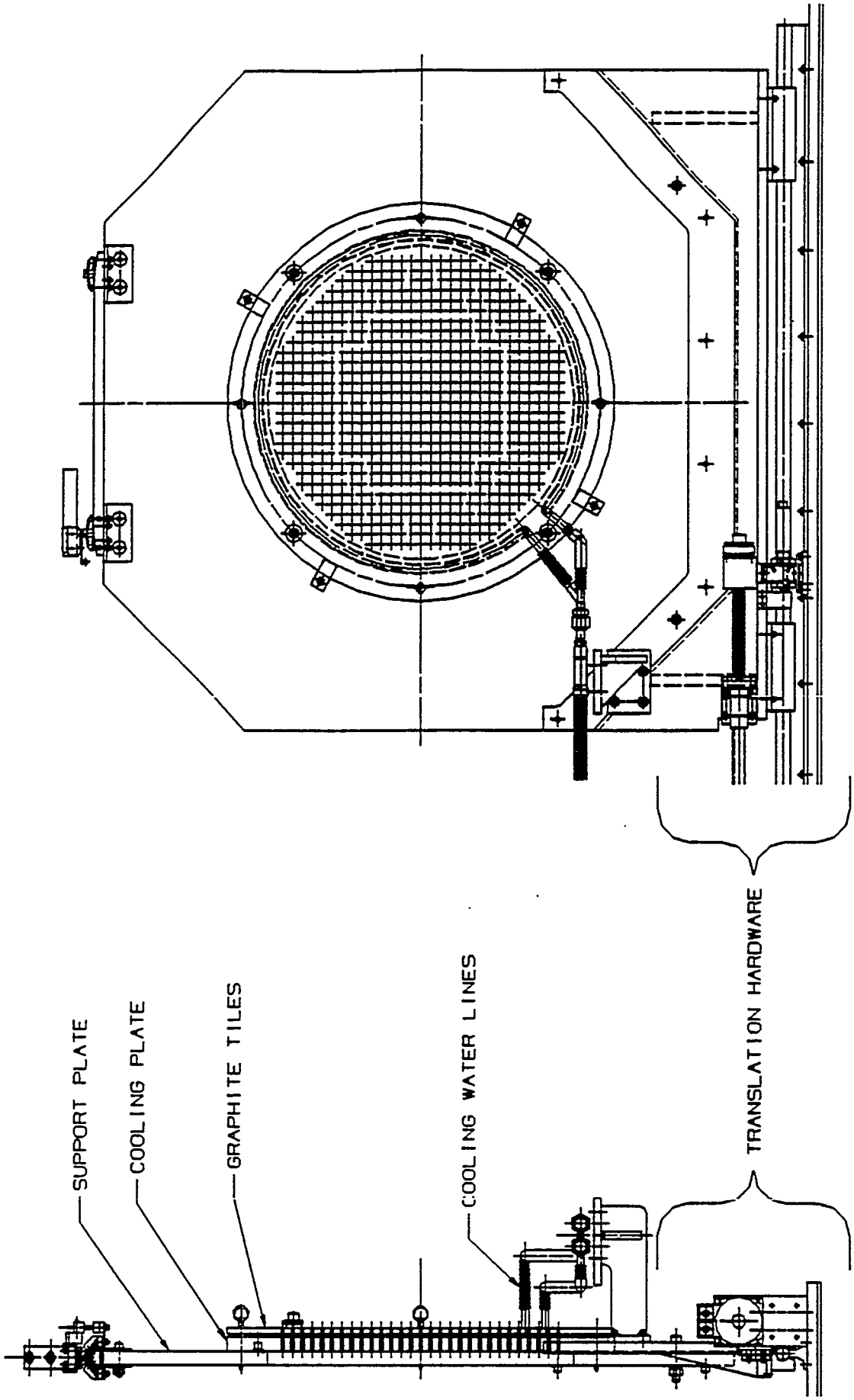

Fig. 4-31. Characterization beam stop.

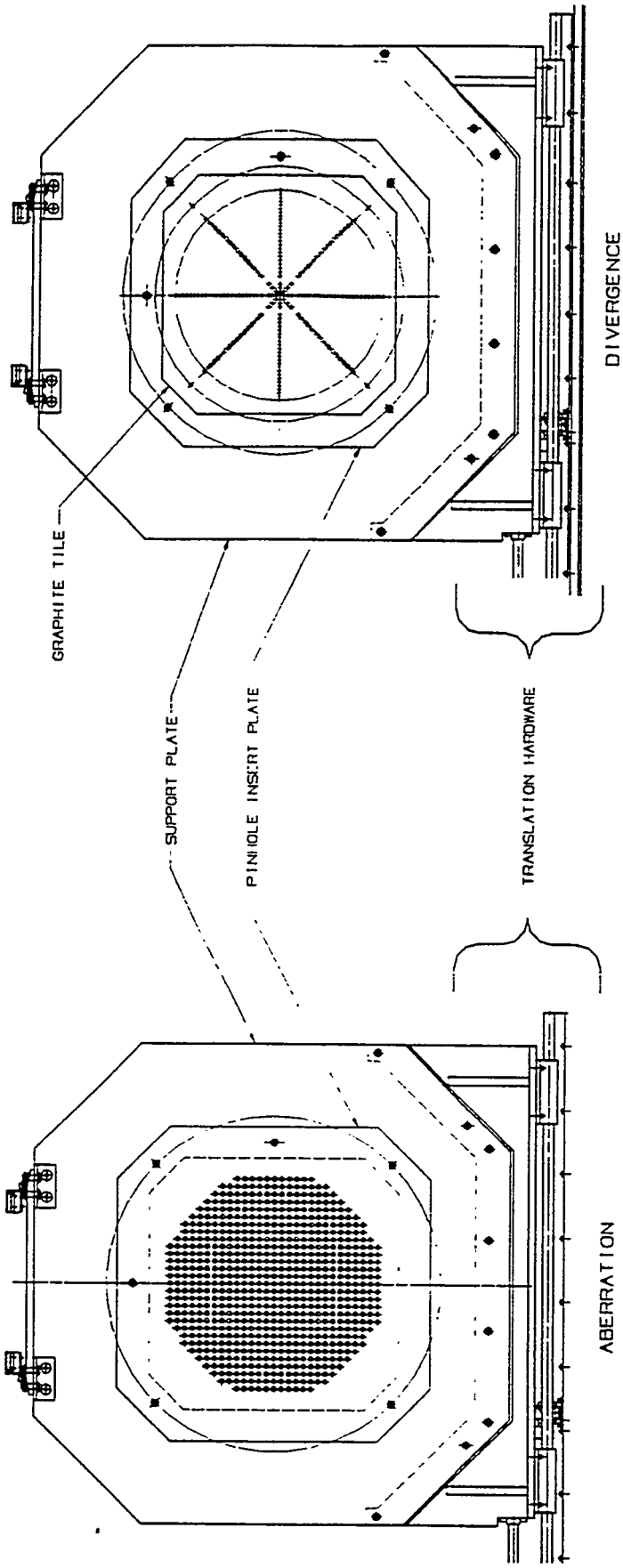

Fig. 4-32. Pinhole plates.

Each of the assemblies will be remotely controlled so that they can be positioned in the beam path, fully withdrawn from the beam path, or can follow the beam during steering. Interlocks will be provided so that there will be no plate assemblies in the beam path when the accelerator is pulsed at the normal frequency of 10 Hz. These features, however, are for equipment protection only and do not involve personnel safety.

There will also be interlocks in run permit that prevent a pinhole plate assembly from being in the beam when the characterization beam stop assembly is not in the beam. The actuation hardware will be computer controlled, and its positioning will be monitored by the closed-loop controller (which is part of the motor) micro-switches, and linear variable differential transformers (LVDT). These features, however, are for equipment protection only and do not involve personnel safety.

4.2.3.3 Sweep Magnet - The sweep is an electro magnet producing a field of 0.5 kG. It is located immediately downstream of the pinhole plate station (see Fig. 4-30). The beamlets produced by the pinhole plates pass through this magnet on their way to the detector station. These beamlets still have a charge associated with some of the particles because of the less-than-perfect performance of the neutralizer foils on the pinhole inserts and the ionizing of some particles from passing through a thin portion of the pinhole insert. The sweep magnet deflects or "sweeps" the remaining charged particles from the path of the beamlets into the beam-line vessel wall. The beamlets, therefore, that contact the detector station's hardware are completely neutral.

4.2.3.4 Detector Station - The detector station is located 34 m downstream of the pinhole plate station (see Fig. 4-30). It contains instrumentation (see Fig. 4-33) that views the patterns of the beamlets for the aberration and divergence characterization experiments. These beamlets are created by the characterization beam stop and the pinhole inserts, which are in the pinhole plate station. The instrumentation here consists of the aberration and divergence camera assemblies. The aberration camera assembly consists of:

- Mark II CCD camera;
- fluor screen;
- calibration plate;
- LN_2 cooling for the camera; and
- translation/positioning hardware.

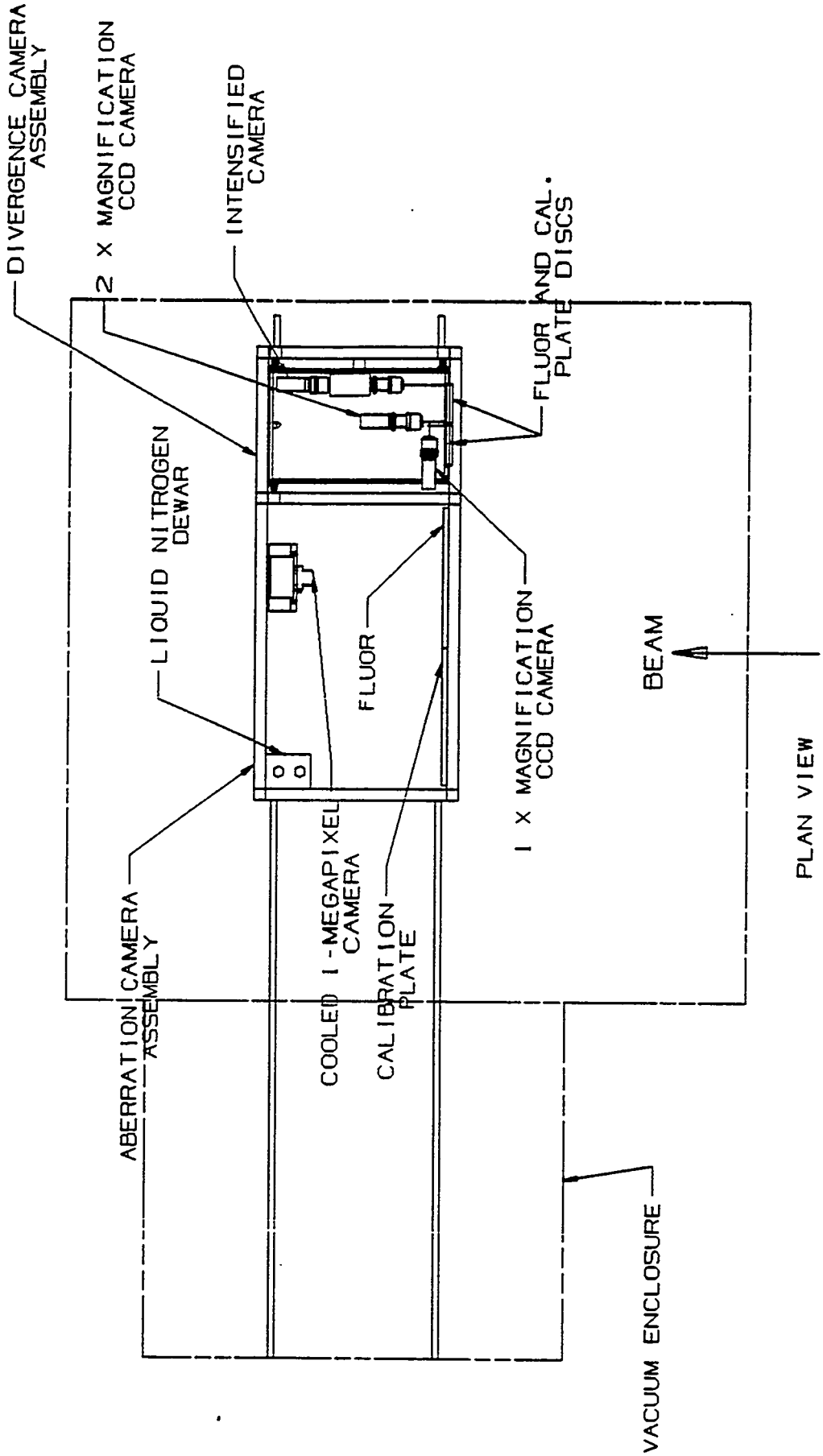

Fig. 4-33. Detector station.

The divergence camera assembly consists of:

- commercial CCD cameras;
- image intensifier;
- fluor and calibration disk;
- LN_2 cooling for the cameras; and
- translation/positioning hardware.

The aberration camera assembly is contained within a space frame that is translated and positioned along precision rails with a motor and ball screw combination. Aberration measurements require that the full beam diameter be used. The fluor-screen area, therefore, is slightly larger than the beam cross section, and the calibration plate in this assembly has the same pinhole pattern used for the aberration pinhole plate. The difference between them is that the calibration plate is backlit to calibrate the Mark II camera. The camera can be positioned behind the calibration plate or the fluor screen with the same translation/positioning hardware used elsewhere. The fluor screen stops the tiny beamlets, which produce a glow in the screen. The patterns of glowing dots on the screen can be recorded with the camera and then analyzed.

The divergence camera assembly is also contained within a space frame, which is translated/positioned in the same manner as the aberration assembly. The divergence assembly can also be translated/positioned vertically. It needs the ability to move vertically because it looks at only a single beamlet at a time. The calibration device and fluor screens, consequently, are much smaller and are mounted on two 7-in. diameter disks. These disks rotate in front of the cameras for calibration and go from one fluor screen to another. The fluors will be damaged by radiation and, therefore, are useless after a few hours of use, so there are multiple fluors on each disk.

Both the aberration and the divergence camera assemblies will have some cooling for their cameras provided by a LN_2 system (see Fig. 4-34). There will be a small ($\leq 10\ \ell$) dewar within the detector station. It will be filled once a day and then allowed to vent outside the vacuum vessel. The evaporation lines will pass through the components or a mounting plate for the components that need cooling.

The diagnostic hardware in the detector station will be controlled in the same manner as the pinhole plate station. Each camera assembly will be controlled remotely so that they may be positioned in the beam path, fully withdrawn from the beam path, or may follow

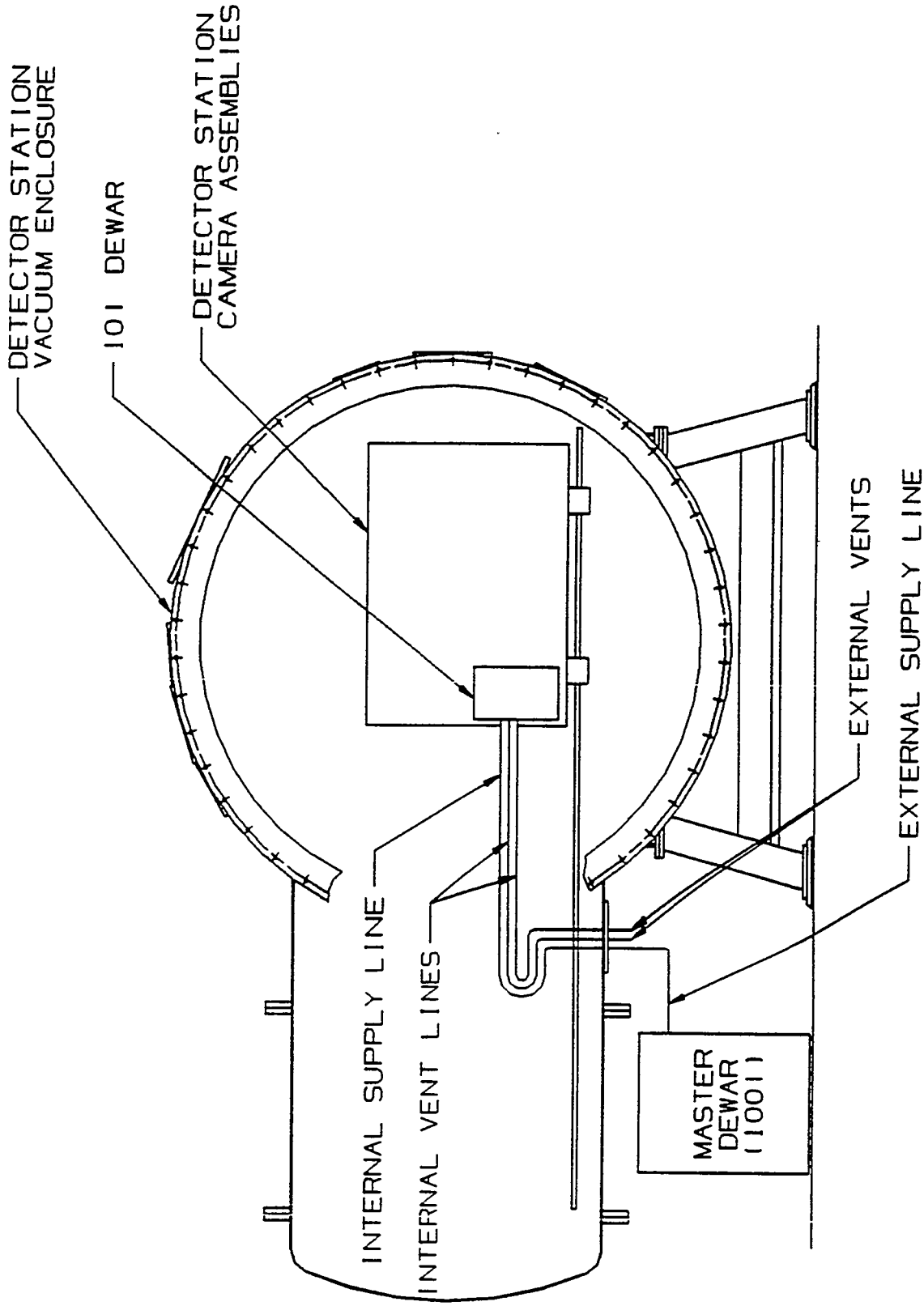

Fig. 4-34. Neutral Beam LN_2 cooling system.

the beam during steering. Interlocks will be provided so that neither of the camera assemblies will be in the beam path when the accelerator is operated at the normal pulse frequency of 10 Hz. There will also be interlocks to prevent a camera assembly from being in the beam path when the characterization beam stop assembly is not in the beam. The actuation hardware will be computer controlled. The positioning of the hardware will be monitored by the closed-loop controller, micro-switches, and LVDTs. These features, however, are for equipment protection only, so they are not LCOs.

4.2.3.5 Vacuum-enclosure Vessels - Each of the major components in the neutral beam requires its own vacuum-enclosure vessel, and large vacuum tubes (see Fig. 4-30) connect these components. These vessels and tubes are an important part of the beam characterization and sensing experiments. They are large because of the beam size, steering angles and experimental requirements. Each vessel has been designed according to ASME Pressure Vessel Code Section VIII guidelines and also approved by the LANL Pressure Vessel Committee.

The stands that support these vessels have been designed according to LANL guidelines to withstand an acceleration of 0.22 g in any direction. This will protect against collapsing during an earthquake.

Because of the vessels' large size, personnel must enter them for certain maintenance operations. The number of openings is limited, and there is a possibility of a limited oxygen supply. Based on the LANL Health and Safety manual, these vessels are classified as Limited Egress/Confined Space areas, which means that anytime the vessels are entered, a SWP is required.

4.2.3.6 Stand Alone Water-cooling System - The stand alone water-cooling system is a commercial water-to-air chiller unit, which connects to the cooling-water feed-throughs on the pinhole plate station. From there, the cooling-water lines are routed through the vacuum enclosure to the characterization beam stop.

4.2.4 Diagnostics

Specialized diagnostics are designed for each experiment. Typical diagnostics are those in experiments 1C through 2A. Experiment 2D's preliminary diagnostics have been determined in

detail. The Experiment 2D accelerator diagnostics are identical to those that will be used for all of Experiment 3.

4.2.4.1 Experiments 1C and 2A - The diagnostics for experiments 1C and 2A consist of a system of beam-sensing and manipulation devices mounted on an aluminum plate. Collectively, the devices are called the diagnostics plate (D-plate), which consists of:

- one beam-current toroid;
- three microstrip beam-position monitors;
- one capacitive phase-spread monitor;
- one beam-deflection electromagnet with a beam-pickup strip made of tantalum;
- two slits;
- two collectors;
- three Faraday cups; and
- four quadrant-tantalum shields for the slit and collector.

Figure 4-35 shows the D-plate layout. The diagnostic system includes the laser-induced neutralization diagnostic apparatus (LINDA) with its Nd:YAG laser.

4.2.4.2 Experiment 2D - The accelerator beam will be split by a dipole magnet, creating an offset beamline for the H^- component of the semineutralized beam and a straight-ahead beam for the H^0 component. (See Fig. 5-4.) There will be a group of diagnostic equipment for each beamline in Experiment 2D, and a few diagnostic devices will be placed in the final DTL cavity or just downstream of it. LINDA will also be utilized. The offset beam line will provide a time-of-flight path to measure changes in beam energy for tuning DTL tanks 9 and 10, provide transport for the DTL output beam to the beam stop during the beam characterization process, and characterize various types of beam jitter (i.e., centroid energy, phase, position, steering angle, and intensity). The offset beam also must be expanded transversely, so the beam does not damage the beam stop. The purpose of the straight-ahead beam line is to measure transverse and longitudinal emittance.

4.2.4.2.1 Offset Beam Line Diagnostics - The offset beam diagnostics consist of a system of beam-sensing and manipulation devices. (See Fig. 4-29.) The devices will be:

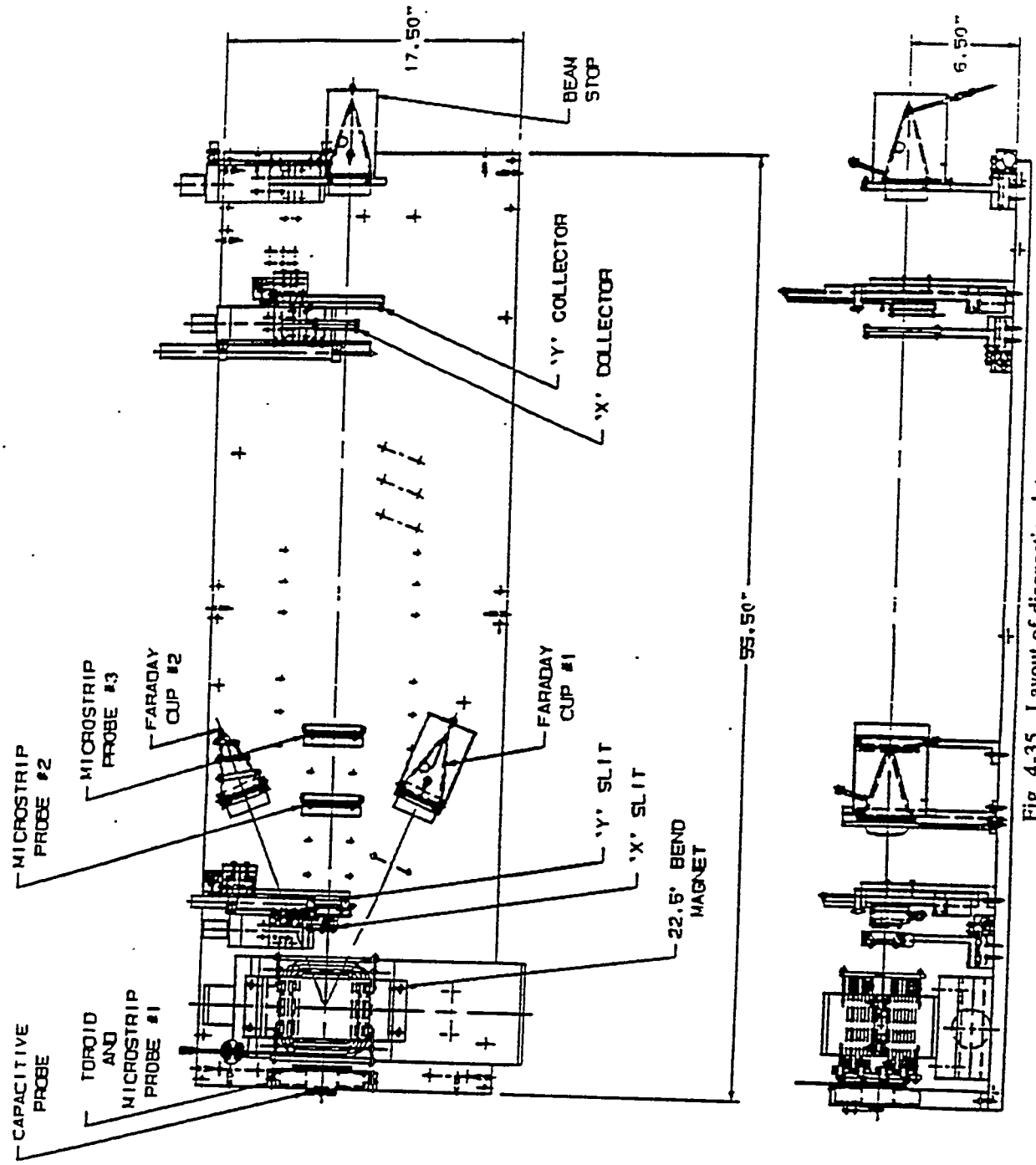

Fig. 4-35. Layout of diagnostic plate.

- two beam position monitors;
- four x-y steering magnets;
- three electromagnet quadrupole magnets;
- one flying-wire scanner;
- one beam current monitor;
- one harp (x and y);
- one halo scraper;
- one beam box;
- one beam shutter;
- one beam stop; and
- four beam-loss monitors.

4.2.4.2.2 Straight-ahead Beam Line - The diagnostics for the unbended or straight-ahead beam line consist of two active devices: one slit assembly (with two slits), and one collector assembly. These will be taken from the D-plate.

4.2.4.2.3 DTL Devices - Several diagnostic devices are used to characterize the beam as it passes through the DTL module. Typical devices are microstrip probes and beam-loss monitors.

4.2.4.2.4 Laser-beam Diagnostic Systems - Two lasers are used in the GTA's LINDA system: one measures transverse emittance; the other measures longitudinal emittance, phase width, and momentum spread. (See Fig. 5-4.) The lasers are commercially procured Class IV lasers. Appendix I contains the manufacturer's safety information. The LINDA SOP governs safe laser operations, including the following practices:

- The lasers are inside an interlocked, environmentally controlled room on the first floor on the west side of the support portions of building MPF-365. The laser beam is transported to the accelerator by a beam-transport tube that passes through the shielding wall between the tunnel and the support area. Special care must be taken with these Class IV lasers to ensure that personnel are not exposed to either direct or diffuse laser radiation. Class IV lasers and their transport lines must be completely enclosed to ensure that no optical radiation escapes. The laser-

beam transport tube contains a series of magnetic interlocks that shuts down the laser beam if the tubing is disturbed.

- Interlocks are provided at the enclosure's entrance, and access is limited to personnel working on, or with, the laser. Anyone working with, or on, the laser must wear appropriate eye protection.

- Initial alignment will be done with the laser beam at low-output energies. Personnel doing the alignment are required to wear appropriate eye protection. Fine-tuning of the alignment will be done from the control room using a remote-control alignment system.

- The laser will be monitored and adjusted remotely. The laser operator completes the initial turn-on in the lab each day. Remote operation of the laser is not allowed unless all interlocks indicate that the laser beam is completely contained in its transport tube, and it poses no hazard to personnel working in the area.

Laser operating parameters for the Nd:YAG pulsed-laser system are as follows.

- Transverse emittance measurements for experiments 1C, 2A, and 2D are:

wavelength	1,064 nm
pulse width	100 ns
energy pulse	2 J
repetition rate	1 to 10 Hz

- Longitudinal emittance measurements for experiments 1C, 2A, and 2D are:

wavelength	532 nm
pulse width	5 ps
energy/pulse	2 mJ
repetition rate	1 to 10 Hz

4.2.4.3 Safety Issues - The beam diagnostic equipment used through Experiment 2D does not require any special personnel safety considerations, with the exception of the

LINDA laser, the electromagnets, and the intermediate beam stop. Safety issues raised by the laser have already been discussed in Section 4.2.4.2.4, safety issues for the electromagnets are discussed in Section 5.3.4; and safety issues for the beam stop are discussed in Section 4.2.2.5.

The halo scraper and harp will need to be treated similarly to the beam stop. They both absorb beams, although a great deal less than the beam stop, and are uncooled. They both will have a low level of activation and may require local shielding as determined by HS-1.

4.3 Accelerator Support Systems

4.3.1 Accelerator Controls

The controls and automation subsystem control the experimental system. The control system's components are distributed throughout the building and are interconnected by a local-area computer network. Run permit, an equipment protection system, is a part of the control system. Fast protect, a second equipment protection system, and RPSS, a personnel safety system, are monitored by the control system.

The primary functions of the controls and automation subsystem are as follows.

(1) Control GTA startup, steady-state running, most effective use, and shutdown by:

- providing complete accelerator data to the system operator;
- adapting easily to reconfiguration;
- supporting the sequential development of start-up from standby condition, operation, shutdown, and fault-recovery;
- developing and integrating software that optimize performance;
- supporting operation of the accelerator in an off-normal state; and
- providing fault-recovery for the set of known faults that do not endanger personnel or equipment.

(2) Support the testing and integration of subsystems during installation by:

- providing concurrent, independent operation of each subsystem during installation and commissioning; and
- supporting parallel checkouts of the subsystems at various levels of operation and integration.

Interconnections between the control system and the accelerator are hard-wired from the accelerator through conduits and junction boxes to electronics racks in the first-floor equipment area. Instruments in these racks are wired to control computers mounted in RF-interference shielded racks. These computers are interconnected by the computer network using optical fibers.

The accelerator is operated from the control room on the second floor (see Fig. 36). Operators interact with the control system by using graphic workstations, which communicate with the control computers over the computer network.

4.3.1.1 Control System Architecture - The control system interfaces are shown in Fig. 4-37; its distribution network is shown in Fig. 4-38. Input-output controllers (IOC) provide the primary data acquisition and control functions on GTA. Most IOCs are located in RF interference-shielded instrumentation racks, either in the first-floor equipment area or in the RF power area on the mezzanine. Instrumentation and control points on the accelerator are hard-wired to the IOCs through electrical conduits and junction boxes. Signal conditioning is usually located in the same or adjacent racks with the IOCs, except for some signal processing for beam diagnostics and RF.

Color-display graphic workstations serve as operator interface (OPI) consoles and are also used for data reduction and graphic presentation. Most OPIs are in the control room, although a few are used in other areas, including the accelerator tunnel, and for equipment checkout, maintenance, and trouble-shooting.

An Ethernet local area network (LAN) interconnects the IOCs and OPIs. Fiber optics is used for the LAN throughout the facility to reduce electromagnetic interference. Control and data acquisition programs are loaded from the network file servers, in the second-floor computer security vault, via the LAN into the IOCs during their automatic start-up operation. The file servers also serve the OPIs and provide an archive for experimental data.

The control system design uses industry standards where possible. IOCs are built on the VME and VXI bus standards and use commercial processors and interfaces. Approximately 80% of IOC hardware and 90% of signal conditioning electronics is purchased off-the-shelf. All network and workstation hardware is commercially purchased.

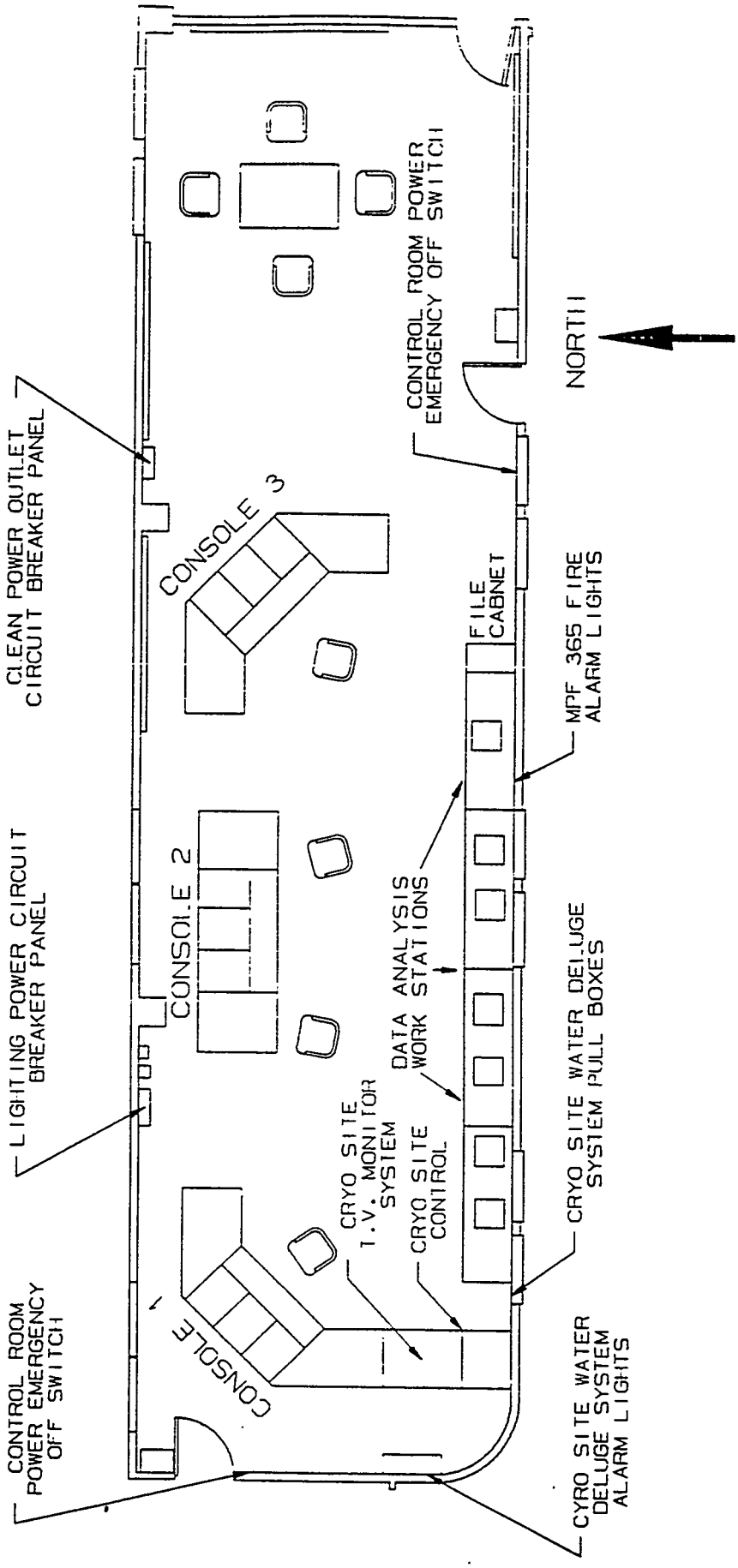

Fig. 4-36. Control room.

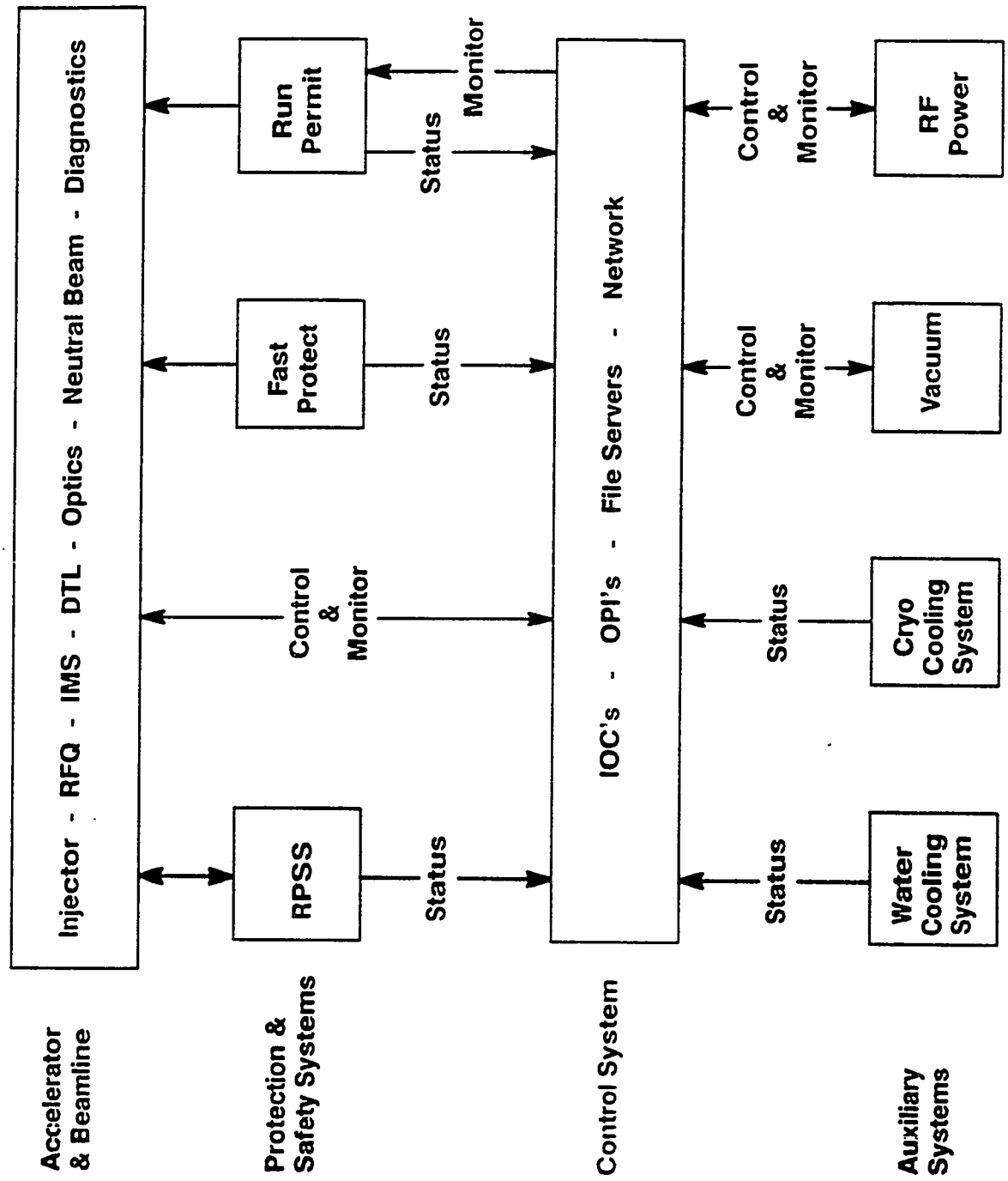

Fig. 4-37. GTA control system interfaces.

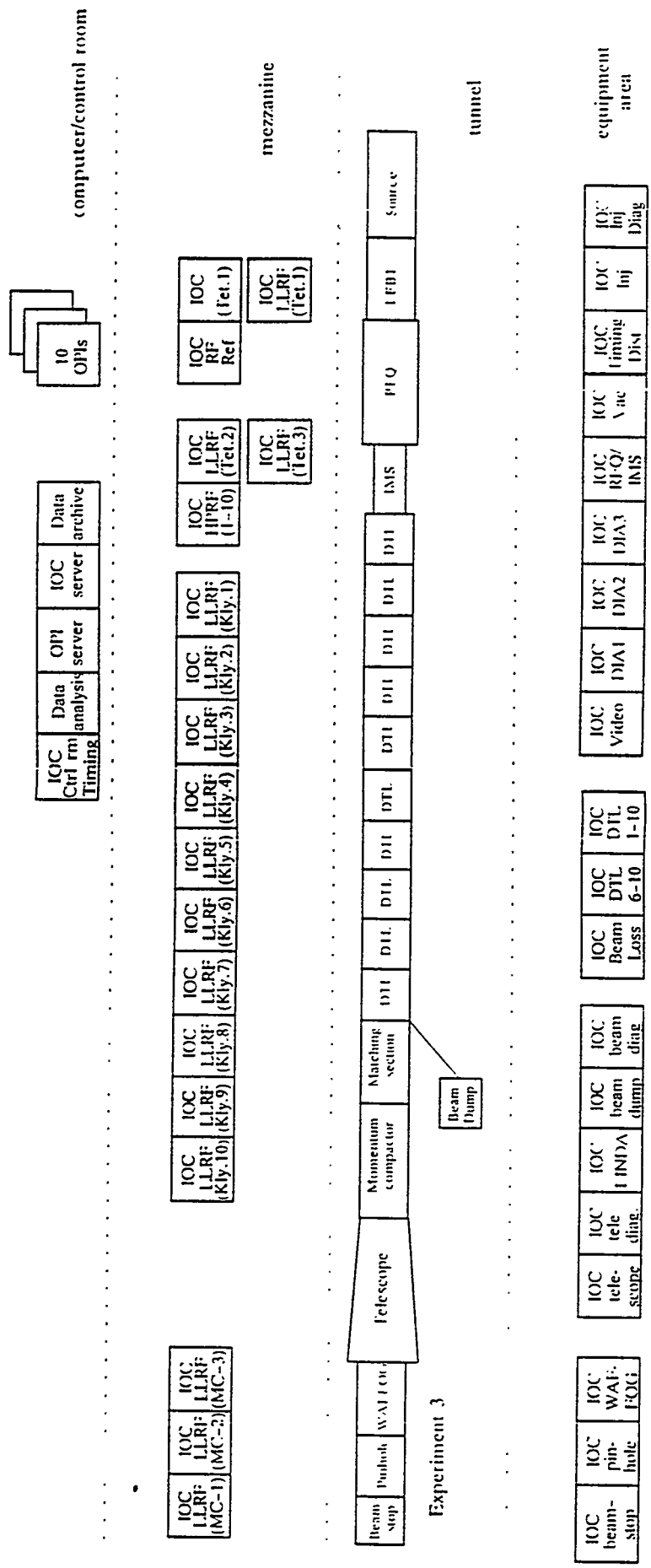

Fig. 4-38. Approximately 40 input-output controllers distribute the I&C functions throughout the GTA facility.

4.3.1.2 Computer Software - The control system software is based on the Experimental Physics and Industrial Control System (EPICS) software tool kit, which was developed by AT-8. EPICS allows the applications engineers and programmers to configure the control system and write complex control algorithms using high-level graphical tools. Use of these tools greatly simplifies the implementation and maintenance of applications software, reduces the likelihood of writing defective software, and simplifies the phased implementation of the GTA accelerator and beam line.

Approximately 15% of the software used in the IOCs is purchased. Of the software written in-house, however, more than 80% is re-used between IOCs. Industry standard networking software (TCP/IP) and the X-windows graphics standard are used.

4.3.1.3 Experimental Operations - All GTA's experimental operations are performed through the GTA control system. The control system directly operates the injector, RFQ, IMS, DTL, output optics, neutral-beam components, WAFFOG, and beam characterization, stops, and diagnostics. The control system also generates and distributes timing and gating pulses, sequences the various vacuum systems, controls the cryogenic cooling of the accelerator structures, and acquires large amounts of experimental and operational data. The GTA control system receives status information from the independent CCS and water cooling systems.

During installation, check-out, and commissioning of the accelerator subsystems operators manually set up various parameters, such as voltage, current, position, flow rate, valve position, and pump power, through the GTA control system via OPI consoles. Diagrams on the OPI displays mimic the layout and state of the accelerator devices and help the operator select proper control elements and actions. Immediate feedback and verification of all actions are built into all such displays. During an operation, the control system collects and stores large amounts of experimental data, such as voltages, beam currents, vacuum levels, and valve positions. This information can be presented immediately on OPI displays; it is also archived on mass storage devices, along with a time tag, for later analysis.

As subsystems or devices are characterized, the need for manual operation decreases, and automatic-control sequences are invoked. In general, the algorithms and parameters for automatic operation are derived during manual operation. Automatic operation frees

operators to commissioning new subsystems. Automatic operation also helps demonstrate that an accelerator can be automated for unattended, remote operation.

During both manual and automatic operation the control system continually checks the control commands and device performance for proper operation and fault conditions. The operators are warned of faults or impending faults through the OPI displays. Special displays help the operator track or isolate the source of a fault. In some cases automatic sequences put the devices into a safe state. The control system also implements the run-permit system which enforces proper operation of the accelerator through a complex, adaptable interlock scheme.

The control system does not have a backup power source. If there is a general power failure, critical accelerator equipment is designed to hold the current state or go into a safe state. When power is returned the IOCs will automatically initialize and put the equipment into a known or predictable state.

As subsequent GTA subsystems are commissioned, the control system will expand to include additional functions. For example, Experiment 1A required two IOCs and two workstations; Experiment 1C required 14 IOCs and 7 workstations; Experiment 2D will require approximately 28 IOCs and 9 workstations; and Experiment 3 is expected to use at least 40 IOCs.

4.3.2 RF-power

The RF-power equipment supplies RF-microwave power to all GTA accelerating cavities. These cavities consist of the RFQ, 2 IMS cavities, 10 DTL tanks, and 3 cavities in the momentum compactor optic section. The RFQ and IMS cavities require 425-MHz, the DTLs require 850-MHz, and the optics require a mixture of 425- and 850-MHz power. Figure 4-39 shows a floor plan layout of the RF system for GTA. The RF system is housed on the mezzanine of building MPF-365. The low-level RF racks that drive the microwave transmitters are on the mezzanine's north wall. (The safety hazards associated with these systems are from standard house power, so they will not be addressed in this FSAR.)

Figure 4-40 shows the relation of the RF system to a high-power amplifier, low-level RF controls, and cavity. The low-level RF system monitors the accelerator's cavity field and drives the RF amplifier so that the cavities RF phase and amplitude are maintained at constant levels. This system operates continuously to keep RF fields at a level that permits proper acceleration of the

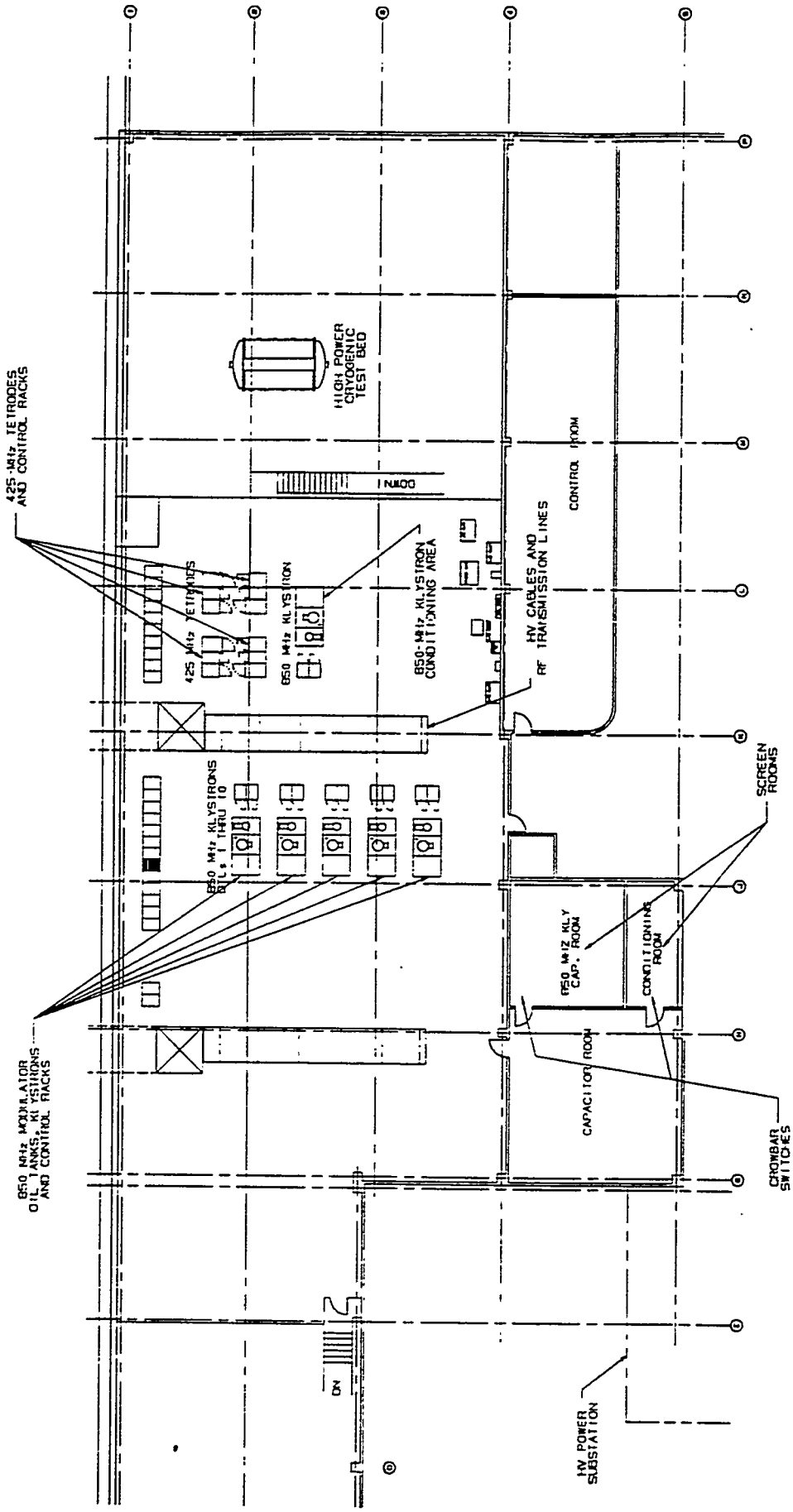

Fig. 4-39. Ground plan of RF system components.

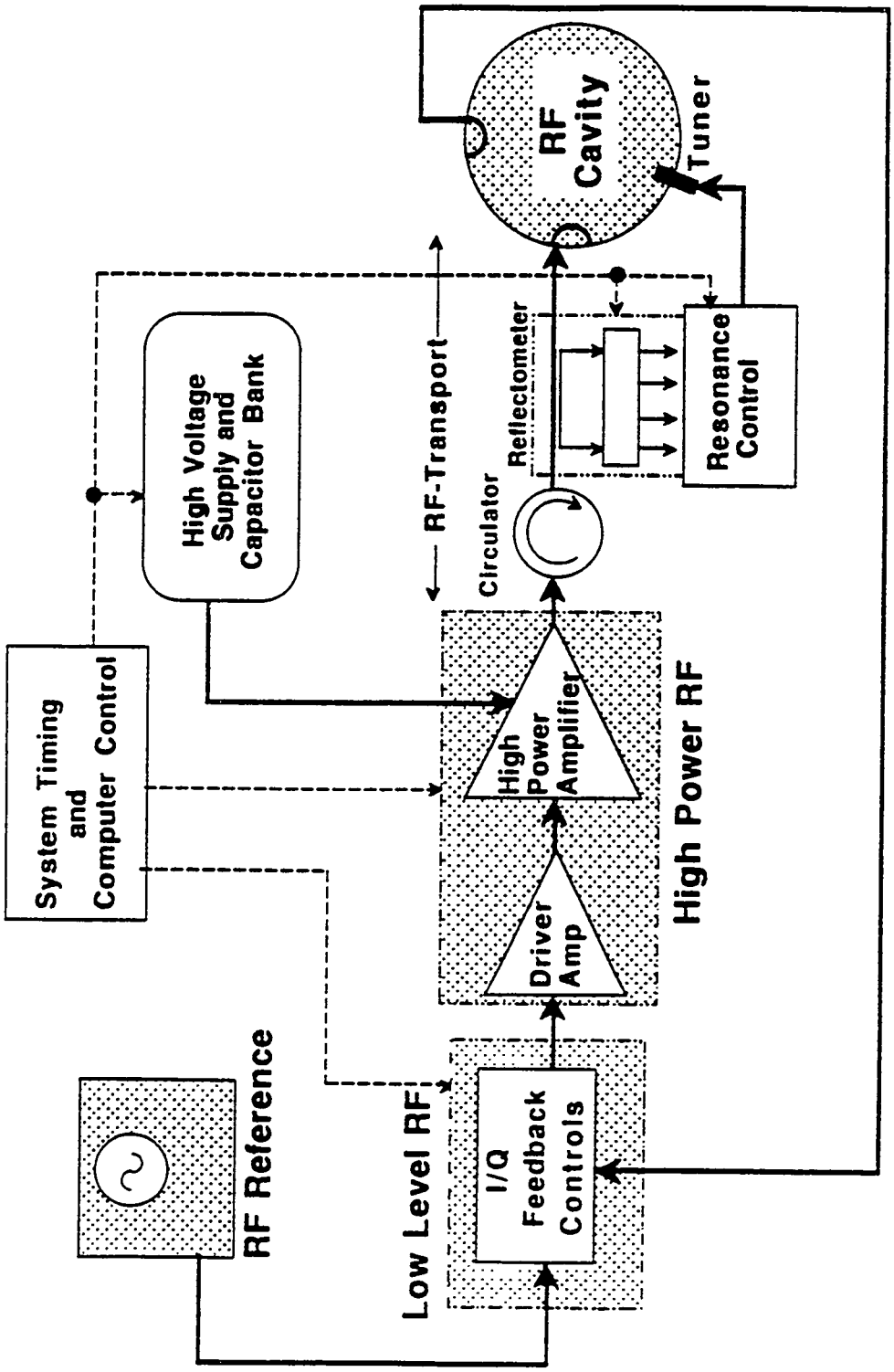

Fig. 4-40. Schematic of RF component requirements.

beam. If the high-power amplifier is not self-contained, it may need to be supplied with power from a high-voltage supply and capacitor bank. (This is typical of a Klystron system used on DTL cavities.) The components of the tetrode system are contained in one amplifier package. Also shown in Fig. 4-40, is a six-port reflectometer, which monitors and maintains the cavity resonance at the proper frequency for the system to work correctly.

The RF system has two types of microwave transmitter modules: tetrodes and klystrons. The tetrodes are capable of producing 300 kW at 425-MHz; the klystrons are capable of producing 1.2 MW of power at 850 MHz. A third system, capable of producing 20 or 100 kW at 850 MHz is available in a tetrode package. (All these are peak powers.) Table IV-5 is an outline of the specifications of each one of these systems.

Table IV-5 RF Power System Specifications

	RF Power Peak	RF Power Average	Band Width	Pulse Width	Rep Rate	Stored Energy	HV (max)	Current (max)
425 MHz Tetrodes	300 kW	6 kW	±2 MHz	2 ms	10 Hz			
850 MHz Tetrodes	100 kW	2 kW	±2 MHz	2 ms	10 Hz			
850 MHz Klystrons	1.2 MW	24 kW	±2 MHz	2 ms	10 Hz			
Small Capacitor Bank						55.5 kJ		
Large Capacitor Bank						160 kJ		
UVC HVPS							100 kV	1A
NWL HVPS							92 kV	5A

Associated with the 850-MHz klystron systems are two ~100-kVdc high-voltage power supply (HVPS) systems that each consist of an external HVPS and a capacitor bank. (These are required because of the energy levels needed to power the accelerator.) The HVPS are outside MPF-365. The two capacitor banks are in steel-shielded screen rooms adjacent to the mezzanine in MPF-365. Each capacitor bank has a crowbar switch that allows the total energy of the bank to be dumped in less than three seconds, with the energy being dissipated in resistors. The capacitor rooms are locked with a Kirk key during operations. Table IV-5 describes the specifications for these high-voltage subsystems. Two HVPS are currently employed by GTA: one manufactured by Universal Voltronics; the other by NWL. The first, which is used primarily for cavity, load and klystron conditioning in the HPCTB and backup, charges the small capacitor bank; the second, which is used to drive the DTL for experiments 2A and 2D, charges the large capacitor bank.

Power for the tetrodes comes from four power supplies within each tetrode unit. Each tetrode amplifier consists of three adjacent equipment racks. These power sources are:

- one 5 kVdc HVPS at 150 mA;
- one 20 kVdc HVPS at 540 mA;
- one 3 kVdc HVPS at 15 mA; and
- one 450 Vdc IVPS at 0.5 A.

Table IV-6 outlines the number of units available and needed for each GTA experiment.

Table IV-6 RF Component Requirements

Experiment	1A	1B	1C	HPCTB Cond	2A	2D	3	Total
425-MHz Tetrodes		1	2				2	5
850-MHz Tetrodes							1	1
850-MHz Klystrons				1	1	9		11

In addition to the 10 klystrons needed to power the DTL cavities, another klystron supplies power to the DTL tank in the HPCTB vessel. This klystron is powered by the small capacitor bank and the UVC power supply. This klystron unit will also be used to drive the first DTL cavity, which is a goal of Experiment 2A. In the center of the mezzanine are five modulators that will power 10 klystrons for the final phase of Experiment 2. These are powered by the large capacitor bank and a 5-A power supply outside the building. Three additional tetrodes are used for Experiment 3: two of these operate at 425 MHz, and one operates at 850 MHz.

Figure 4-41 schematically shows the amplifiers needed to power various associated cavities on the accelerator. Shown in the figure is the available power from each amplifier and enclosed in each cavity is the power actually needed for the experiment. Notice that these are different numbers, and that system safety and issues related to this area are specified for the maximum power that the source can provide.

The RF transport system (waveguide and rigid coax) is interlocked with air pressure switches to ensure that the high-power RF cannot be turned on if the integrity of the transport system is violated.

The DTL is not shown, but waveguide and coaxial RF transport lines are sent through the waveguide tunnel to the accelerator. The RF transport for these systems is passive but is interlocked for

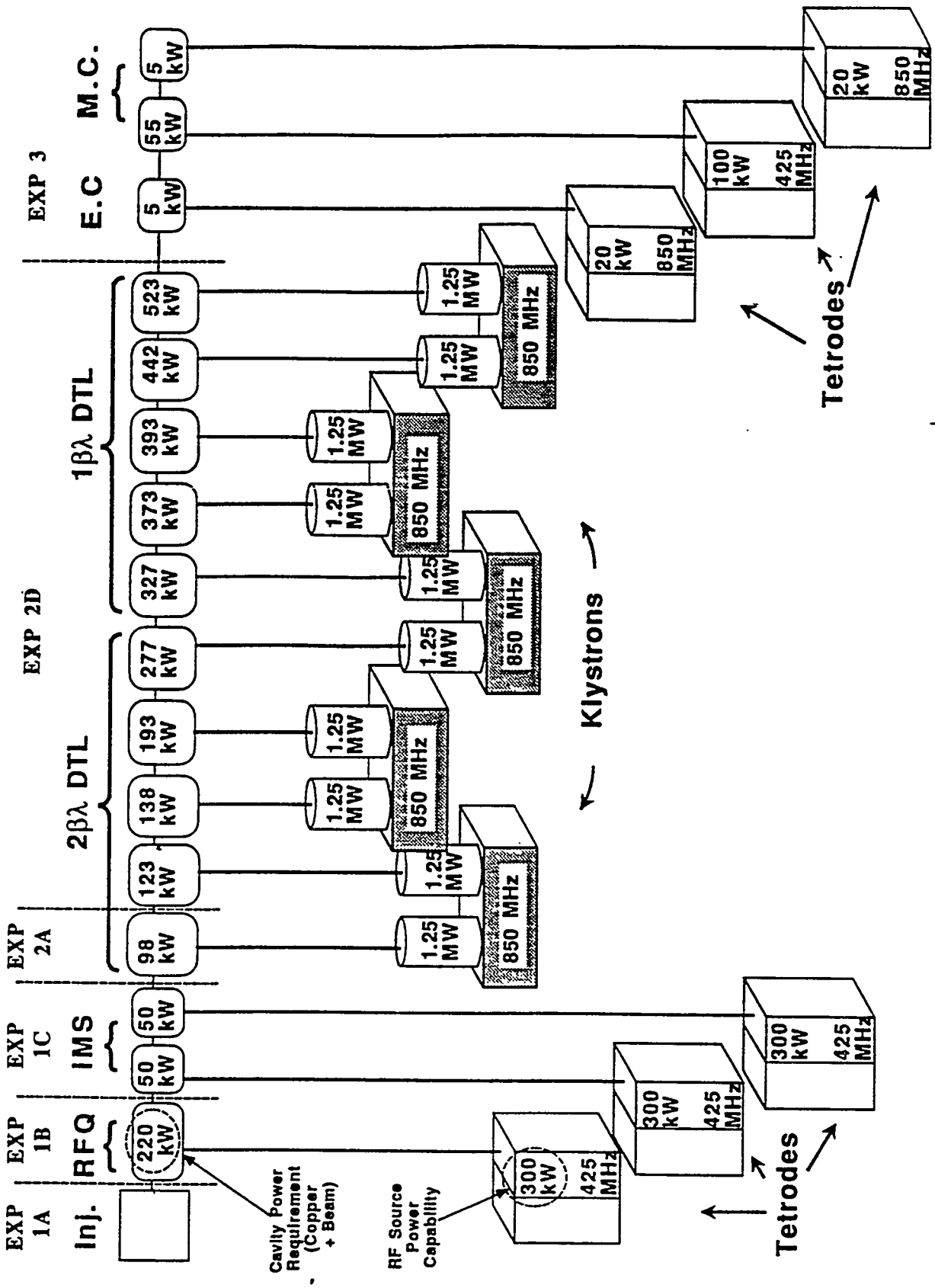

Fig. 4-41. Block diagram of the RF power.

RF leakage. RF power is transported from the RF stations to the RF loads by rectangular or coaxial transmission lines. Waveguides will be pressurized with dry air. A pressure transducer will be used as an interlock to ensure that all the waveguide is connected. A missing waveguide interlock will interrupt the RF power.

4.3.2.1 Tetrode System - The tetrodes provide RF power to the RFQ, IMS, momentum compactor, and bunch rotator. One 300-kW tetrode is required to drive the RFQ, and 2 more are needed to drive the 2 IMS cavities. A 20-kW tetrode is required to drive the energy dejitter cavity, the two cavities of the momentum compactor are driven by a 100-kW, 425-MHz tetrode and a 20-kW, 850-MHz tetrode, respectively. The major components of the 300-kW 425-MHz system include:

- air-cooled triode amplifier (EIMAC 8938);
- water-cooled tetrode amplifier (Burle 4616);
- solid-state driver (MACOM Model No. PCA 425-82/10075A);
- high-voltage triode plate supply (Glassman 5 kVdc, Model No. PS/PG005P150XC4);
- high-voltage tetrode plate supply (Hipotronics 20 kVdc);
- high-voltage tetrode screen supply (Glassman 3 kVdc, Model No. PS/ER03R100-XC4);
- intermediate-voltage grid supply (Acopian 450 Vdc, Model No. U360Y10); and
- system controller (Allen-Bradley, Model No. PLC-5).

All high-voltage connections to the triode amplifier are internal to the cavity and are inaccessible under normal operation. The filament voltage is 5 Vac, stepped down from 120 Vac by means of a filament transformer. All ac connections on the high side of the filament are shielded. At the bottom of the triode cavity, an exposed terminal block carries a 30-Vdc pulsed signal. A high-power resistance board provides the high voltage to the triode and tetrode cavities. The resistor board is shielded and labeled "Danger High Voltage."

High-voltage and intermediate voltage connections to the tetrode amplifier are internal to the cavity and are inaccessible during normal operation. A high-voltage connection to the tube vacuum pump is to the right side of the cavity. The high-voltage connections are internal to the pump, which is labeled "Danger High Voltage." The filament voltage for

the tetrode is 0.95 Vac at ~500 A. The connections to the filament are not shielded, because they are an integral part of the tube structure. There is a warning sign however, and maintenance precautions are addressed by the 425-MHz Tetrode Amplifier Conduct of Operations. The connections are on the two exposed cooling water inlets at the midpoint of the cavity. The third cooling water inlet is at the same point where the screen potential (~1800 V) enters the cavity. This inlet is covered with a grounded copper box to shield the high voltage. The plate cavity (lower cavity) is under a pressure of 45 psi. A bleed valve is installed in the cavity to audibly indicate the presence of pressure in the cavity. The cavity was designed in accordance to the Laboratory standard for pressurized vessels in an occupied workplace (meets ASME code) and has been hydrostatically tested to 100 psi. A pressure-relief valve is in place and is set to discharge at 40 psi. Removing the pressurized air source from the cavity results in immediate discharge of pressure. An interlock system pressure transducer will shut down all HVPSs if the cavity loses pressure.

There are three high-voltage energy storage capacitor systems associated with the 425-MHz tetrode: one for the 20-kVdc Hipotronics power supply, one for the 5-kVdc Glassman power supply, and one for the 3-kVdc Glassman power supply. Whenever an interlock fault is sensed by the Allen-Bradley controller, the 20-kVdc power supply is shut down and a shorting rod is placed across the terminals of its output capacitors. At the same time, power is drawn from the two smaller power supplies and any stored energy in their 60-μF capacitors is discharged to ground via high-voltage relays. The intermediate-voltage tetrode grid supply delivers approximately 300 Vdc. The supply feeds a 2-μF capacitor with a bleed resistor in shunt with the capacitor. All terminals are shielded from contact. The bleed resistor is the only discharge mechanism for the capacitor and will discharge within 30 sec after removing the power. Access to the capacitor is through the disassembly of the total supply.

The system controller consists of an Allen-Bradley controller and a control box to interface the Allen-Bradley to the tetrode subsystem. The control box contains 120 Vac and 300 Vdc signals on exposed terminals. The terminals on the exterior of the box are shielded during operation. Any maintenance on the control box requires removing the power.

RF power from the tetrode amplifiers is transported to the RF loads by rigid coaxial transmission line.

All descriptions, procedures, and features that apply to the 425-MHz tetrode amplifier also apply to the 850-MHz tetrode amplifier. They are essentially the same unit tuned to different frequencies.

Capacitor banks receive high voltage from the high-voltage tetrode-screen supply and the triode-plate supply over shielded cables. When an interlock fault is sensed, a high-voltage relay controlled by Allen Bradley equipment will discharge these capacitor banks. If a relay fails, a bleed resistor will shunt the capacitor banks. In addition, a grounding stick is included in the cabinet. High voltage is supplied to the tetrode plate from an external cabinet. The intermediate-voltage tetrode-grid supply outputs a voltage of ~300 V dc. The supply feeds a 2-μF capacitor with a bleed resistor in shunt with the capacitor. All terminals are shielded from contact. The bleed resistor is the only discharge mechanism for the capacitor and will discharge within 30 sec after removing the power. Access to this capacitor is through the disassembly of the total supply.

4.3.2.2 850-MHz RF Klystron System - The RF klystron system has multiple configurations and operational parameters. For GTA operations, the system has been designed exclusively to drive the 10 tanks of the DTL, as shown in Fig. 4-41. One klystron is required for each DTL tank. Two klystron tubes have been installed as output devices for each modulator. The 10 tanks, therefore, can be driven by five modulators. In addition, an extra modulator with two klystrons has been installed in the mezzanine to power the HPCTB and serve as backup for the DTL system. Experiment 2A will use these klystrons for the first DTL cavity until the full DTL klystron system is installed. The descriptions for the GTA klystron system and the HPCTB high-power RF conditioning system are essentially the same.

The modulator/klystron subsystem is known as an RF station. It consists of the following major elements:

- two klystron tubes (Thomson CSF Model No. TH-2138 or TF-20450);
- modulator oil tank;
- oil-circulating pump;
- pulse deck;
- two filament transformers;
- plumbing for circulating coolant (water);
- two vacuum-ion pumps; and

- Allen-Bradley PLC-5 controller.

In addition to the modulator/klystron itself, the klystron hardware system consists of a set of interconnected blocks. The following list describes those blocks:

- *Power conditioning block*—consists of a regulated, SCR-controlled high-voltage dc power supply (Universal Voltronics model 1-A or NLW's model 5-A) and a capacitor bank (either the small bank, which is capable of storing a maximum of 55.5 kJ; or the large bank, which is capable of storing 160 kJ). The power-conditioning block takes available ac prime power and converts it into a regulated source of dc voltage at 92 kV.

- *OPI block*—provides keyboard, video, and associated computing hardware to provide the operator access through the computer control network, Ethernet, to the other blocks of the system.

- *Low-level RF and control block*—consists of two racks of equipment for each modulator. These racks allow for fast feedback control of RF input to the high-power amplifiers and associated computing and interfacing equipment to connect a station to the computer control network. There are 12 low-level RF control blocks. One is needed for each RF load block.

- *RF reference rack block*—provides a stable RF reference source and coherent distribution of the source signal.

The equipment represented in the last three blocks poses only house ac voltage as safety hazards, so they will not be discussed in this SAR. A block diagram of the klystron system can be seen in Fig. 4-42.

Two HVPS, each charging a capacitor bank, provide the necessary voltage for operating the high-power RF stations. Current from the power supplies to the capacitor rooms enters MPF-365 via triaxial cable in conduit runs. The center conductor is the "hot," the inner outer conductor is the "return," and the outer conductor is grounded. The large capacitor bank, consisting of 50 5.6-μF capacitors in series/parallel, can store up to 160 kJ of energy. The small capacitor bank, consisting of six 5.6-μF capacitors, can store up to

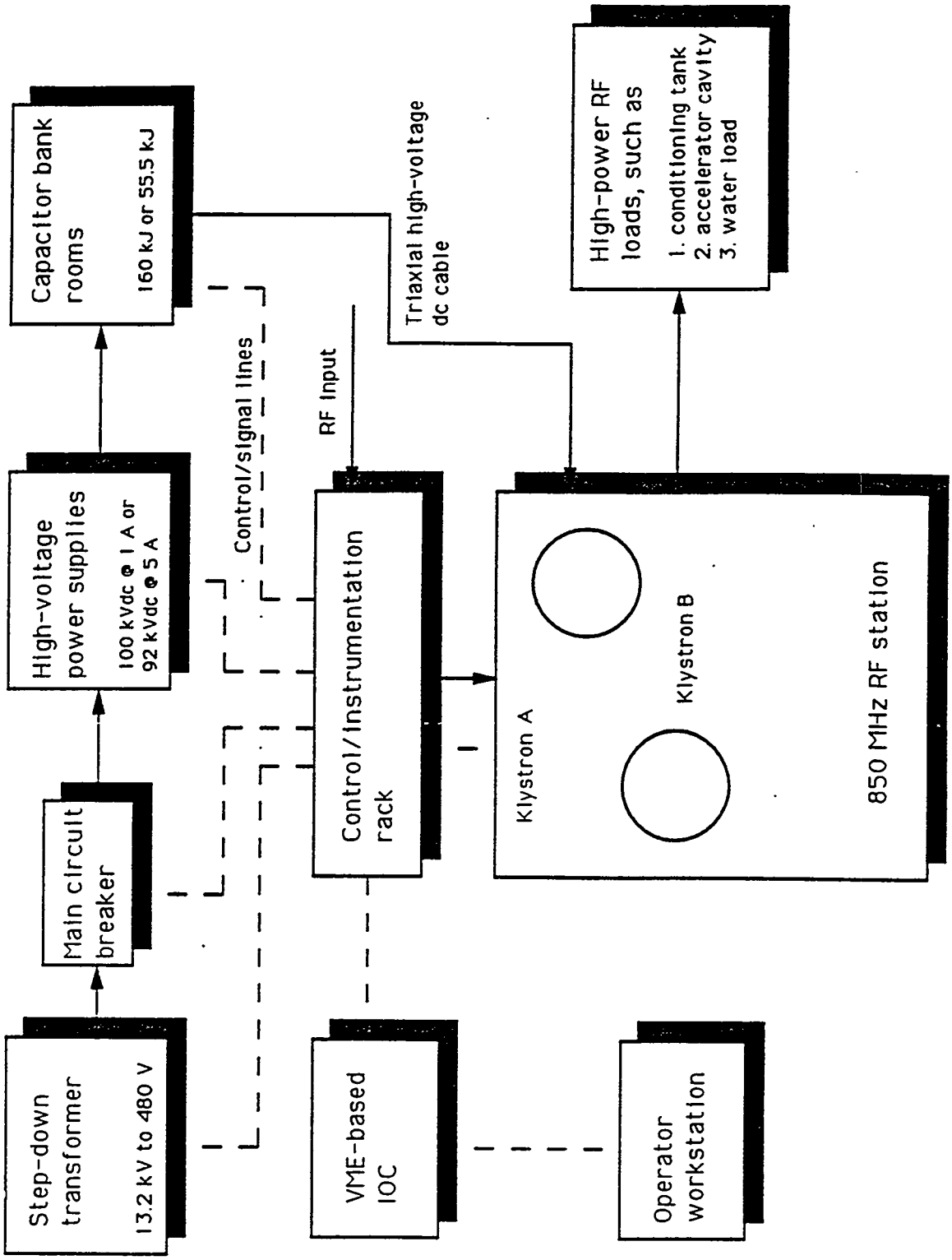

Fig. 4-42. Block diagram of klystron system.

55.5 kJ. Each capacitor bank has a crowbar switch that allows the bank to be discharged in a few microseconds if an equipment fault, such as arcing in a klystron, is sensed farther downstream. Furthermore, each bank is protected by a pneumatically operated Ross dump switch, which is capable of returning the current of the fully charged capacitor bank to the HVPS. It operates in tandem with the crowbar circuit. Although slower acting—on the order of a few seconds—the dump switch shorts out the output of the HVPS, thus providing an added measure of security for GTA personnel. Both capacitor banks are in steel-shielded screen rooms that must be closed and locked by a Kirk key for operations to begin. Any procedure that calls for the manual de-energizing of the capacitor bank requires the presence of at least two qualified persons. A SOP covers the operational scenarios associated with energizing and de-energizing the HV system for personnel and equipment safety.

Power is routed from the capacitor banks to the RF stations through the same kind of triaxial cable used to bring the HV into the capacitor rooms. The outer conductor is grounded at a single point at the modulator tank. The high-voltage bushing used to connect the capacitor room power to the RF station is bolted to the tank and cannot easily be removed or disconnected.

Maximum voltage input to the RF station is -90 kV. Maximum beam current for each klystron is 30 A. Maximum bias voltage to the modulating anode is -2 kV. The modulator tank, which is filled with approximately 200 gal of Envirotemp 200 Fluid, a nonhazardous, nontoxic insulating oil, contains the pulse deck, a filament transformer for each klystron, three 120-kV isolation transformers for the filament transformers and pulse deck, and current transformers for instrumentation and monitoring. The bottom part of each klystron tube, consisting of the filament, cathode and modulating anode, is also immersed in the oil bath. Major RF station components, outside of the tank, include the water-cooling manifold, oil pump, oil-flow, water and temperature sensors, and interlocks. In addition to the high-voltage input, the RF station also receives variable ac power from the control rack to trim dc current for the pulse deck and an RF signal at no more than 20 W. All RF station high-voltage components and connections are contained within the modulator tank and oil bath.

High-power RF is carried from the klystron output to the load (DTL cavity, dummy load, HPCTB, etc.) through a high-power RF subsystem, which consists of a WR 975 waveguide, directional couplers, arc detectors, and air-flow sensors.

Control of the RF station is provided by two nearby control/instrumentation racks. The RF station may be controlled locally at these two racks or remotely by the GTA control system network working through the local racks. The two racks contain the following equipment: an Allen-Bradley PLC-5 input/output crate, an Allen-Bradley T30C display, an ac distribution panel, two RF drivers, two ion vacuum pump controllers, a high-voltage fault logic analyzer, a HVPS remote-control chassis, four run-time meters and nine individual power supplies that run the klystron solenoids. There is also an emergency off button. The control system monitors all necessary input signals, interlocks, operator requests or commands, and takes the necessary action.

The RF system's interlocks design permits the RF system to operate as an independent unit. The interlocks include high-voltage power supply protection, waveguide pressurization, and proper placement of grounding hooks and door closures. Only when the interlocks are complete and the system is satisfied that safe operation is ensured will a final switch closure be made and presented to the RPSS. Closing the final switch signals the RPSS that the RF is ready to be energized. Should any internal interlocks break during accelerator operation, the final switch will open and the accelerator will shut down.

4.3.3 The Accelerator/RFQ Vacuum System - The vacuum system for Phase 2, 24-MeV, consists of four connected vacuum vessels: one for the RFQ and IMS, two for the 10 drift-tube modules (five in each vessel), and a diagnostic spool (Fig. 4-23). The RFQ/IMS and DTL tanks are mounted directly to the tunnel floor and are mechanically isolated from the internal accelerator components. Cryogenic-cooling lines and RF-power lines pass through the vacuum envelope. Welds or bellows maintain internal vacuum integrity and provide mechanical isolation for internal accelerator components. The vacuum envelope and support stands are designed to withstand an acceleration of 0.3 g.

Requirements of a vacuum system of a cryogenically cooled GTA system are twofold: first, before cryogenically cooling, the vacuum system must reduce the internal pressure of the vacuum vessels from 1 atm to ~1 x 10^{-6} torr and must reduce water vapor and other contaminants on the vessel walls and accelerator structure; second, after cool-down of the accelerator, the vacuum pump's function is to pump noncondensable gases—primarily hydrogen and helium—and to minimize pressure excursions caused by beam scraping and other anomalies.

4.3.4 Water-cooling Systems

GTA heat loads, which are not cryogenically cooled or air cooled, are water cooled. The water-cooling system is of the industrial standard-type used in commercial-process water-cooling systems. The system employs the concept of primary-secondary cooling with the use of heat exchangers and a cooling tower. The primary-water systems definition and function is to pick up heat in the heat exchanger and transfers it via an open loop piping system to a cooling tower for dispersion to the atmosphere. The secondary-water systems definition and function is to pick up heat from the accelerator and accelerator subsystems and transfers this heat via closed loop piping systems to the heat exchanger. (See Fig. 4-43.)

There are two classes of heat loads in the GTA process-water cooling system: potentially contaminated and uncontaminated. The only source of activation, which could affect the water-cooling system, is the accelerator in the beam tunnel. Potentially contaminated water is defined as any water that directly accesses (cools) beam line optics components or beam stops. Small portable self-contained water chillers will be used in the beam tunnel to cool the beam line optics components and beam stop equipment. The portable self contained water chillers are discussed in 4.3.4.1. Uncontaminated water is defined as all other process cooling water that does not directly access the accelerator beam line optics or beam stops. Some examples of uncontaminated heat loads are the injector, tetrode, klystron, and various compressor and vacuum equipment. Table IV-7 gives some of the water system parameters.

The cooling system sends a "go" or "no go" status signal to the computer control room; this is the only line between the process water-cooling system and accelerator-computer-control system. The 40-kW cryogenic compressors located in the cryo equipment room are not cooled by the process water system. These compressors are cooled by the building chilled water system and are uncontaminated heat load.

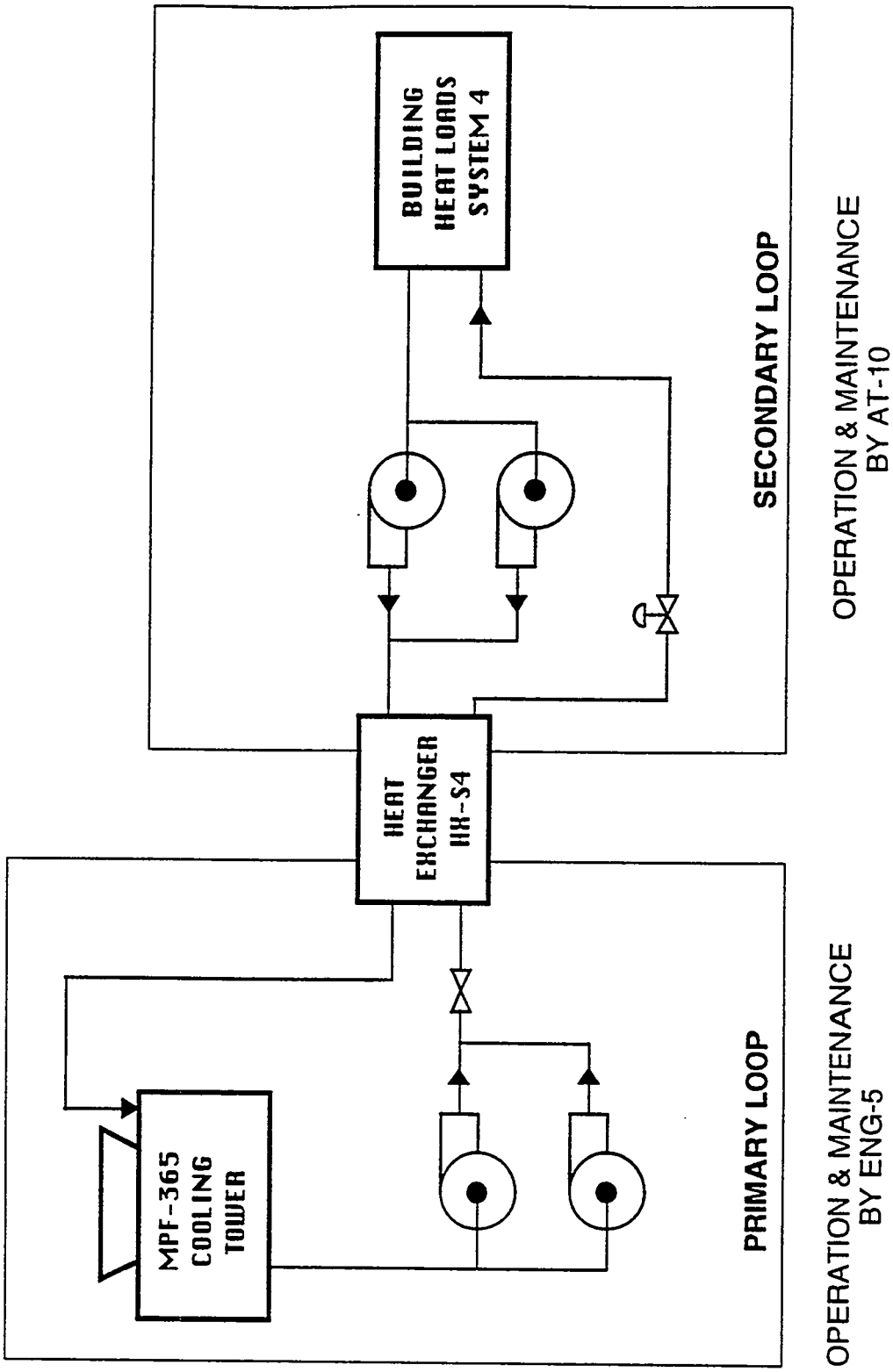

Fig. 4-43. Water-cooling system operational schematic.

INTENTIONALLY BLANK

Fig. 4-44.

Table IV-7 Water System Parameters

	Flow Rate gpm	Water Quality	Operate Time hr/d	Water Temp. °F	System Volume Gal	Potentially Contaminated
Primary cooling system	850	pH ~8.5	24	70 ± 10	10,000	No
Secondary cooling: non-contaminated (System 4)	900	2MΩcm	24	70 ± 10	2,500	No

4.3.4.1 Potentially Contaminated Water-cooling System - All water cooling of accelerator equipment that has the potential for activating the cooling water will be accomplished using a portable water chillers. The small portable self-contained water chillers will be used in the beam tunnel to cool beam line optics components and beam stop equipment. (See Fig. 4-46.) These are water to air chillers, so there is no possibility of potentially contaminated water leaving the tunnel area. The water in these closed-loop systems will be classified and treated as potentially contaminated. Appropriate measures are taken to ensure that contaminated water is isolated from the main-facility water, and all contaminated water is monitored and disposed of properly by EM Division. These measures will be taken in order to assure that water which may be slightly contaminated does not escape to the environment.

4.3.5 40-kW Cryogenic-cooling System

The Phase 2 experiments are helium cooled by the 40-kW CCS built by CVI, Inc. Having a nominal cooling capacity of 40 kW, the CCS is designed to cool the GTA with a circulating flow up to 475 g/s of gaseous helium, which is cooled to 21 K by heat exchange with LH_2. Figure 4-47 shows a schematic of the basic elements of this accelerator-cooling concept. To minimize the use of LH_2, the CCS is equipped with a LN_2/helium heat exchanger for the initial phase of cooling the cryogenic-accelerator components from room temperature to LN_2 temperature.

The subcontractor selected to design, fabricate, install, and test the CCS was CVI, Inc., of Columbus, Ohio. CVI has more than 30 yr of experience in the cryogenic and vacuum technology

INTENTIONALLY BLANK

Fig. 4-45.

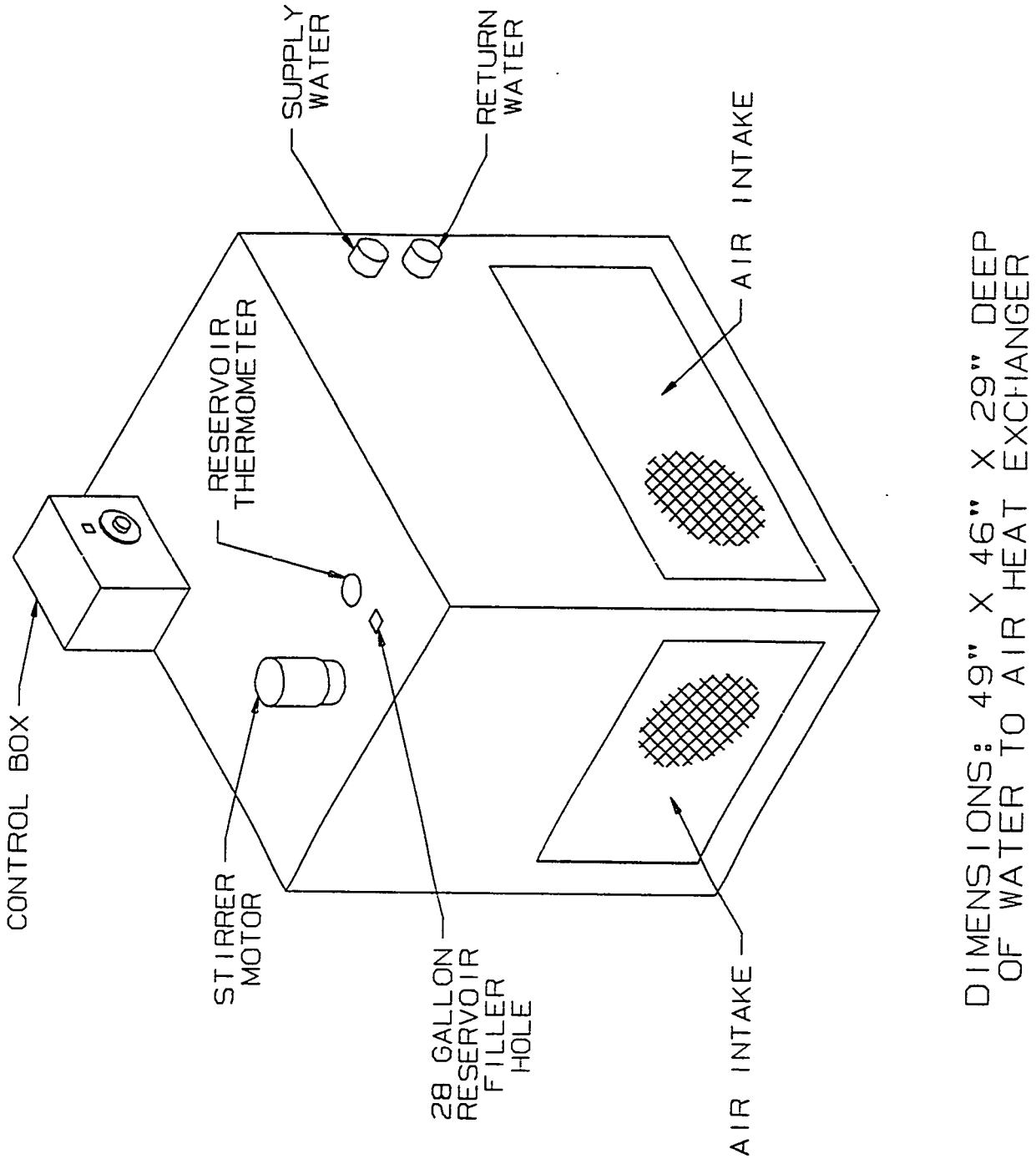

Fig. 4-46. Stand alone portable water chiller units.

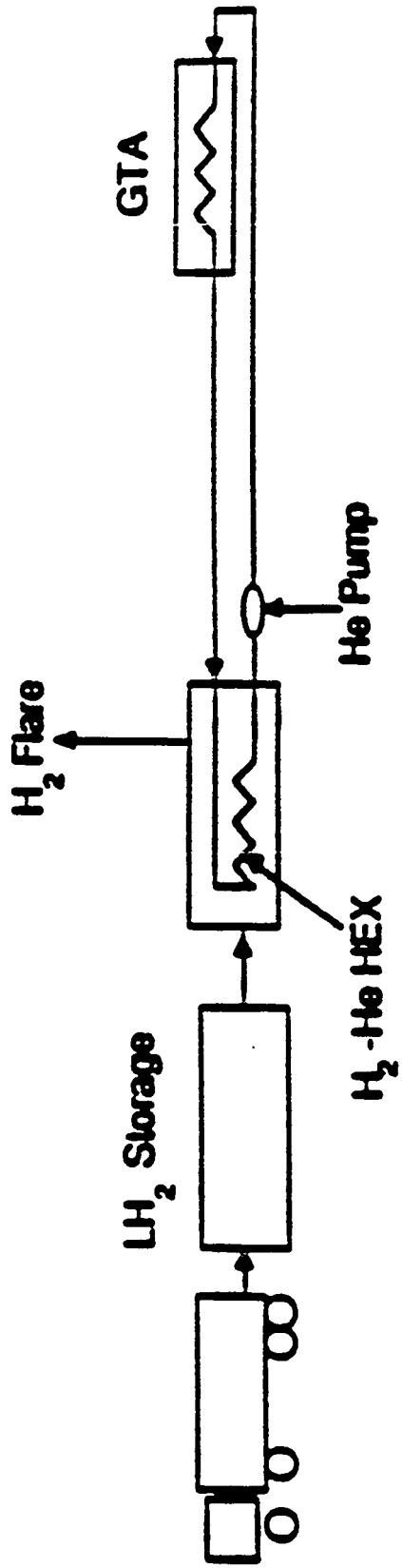

Fig. 4-47. Cooling concept selected for the GTA.

field and was selected in competition with other leading firms in the cryogenic industry. This experience includes the development and supply of critical equipment for the nuclear-power industry and the fabrication of both ASME Section VIII and III coded pressure vessels and piping systems. The company has provided complete LHe and LN_2 refrigeration systems to many customers, including Lawrence Livermore National Laboratory. CVI's LH_2 experience includes piping systems for the Space Shuttle test facilities at both Kennedy Space Center and Pratt & Whitney, and for the NASA Huntsville Advanced Engine test stand. Both Air Products and Linde were consulted on the design of the system. Before either of these LH_2 suppliers deliver hydrogen to the CCS, they inspect the facility to ensure it meets their safety requirements.

Figure 4-48 shows the site plan for the CCS and the following major features, which are described later in this report:

- LH_2 storage dewar and area;
- GHe and GN_2 high-pressure tube trailers;
- LH_2 transfer line between the LH_2 storage dewar and the run dewar;
- LN_2 storage dewar;
- helium storage and recovery tanks;
- LH_2 run dewar and flare stack;
- LN_2 run dewar; and
- helium flow-loop equipment room.

The accelerator beam tunnel is directly below the equipment room, and the cryogenic helium piping connection to the accelerator runs vertically between the tunnel and the equipment room.

Access to La Mesita Road is controlled, so the nearest public exposure to the CCS is now on East Jemez Road, ~800 ft from the LH_2 storage dewar.

Figure 4-49 shows a process and instrumentation diagram of the helium flow loop. All valves and controls, but one, are located in the equipment room. The exception is the GTA load-simulation valve at the bottom of the figure; this valve is in the accelerator tunnel and was used for the CCS acceptance test. Other major components in the equipment room are the circulation compressor, warm-up and load-simulation heater, purifier, recovery compressor, and recovery heater.

Figure 4-50 shows the process and instrumentation diagram of the CCS storage and supply, which includes the LH_2 and LN_2 subsystems, the GHe storage, and the high-pressure helium and nitrogen supply tanks and auxiliary piping. All components in the LH_2 subsystem are outdoors, and no

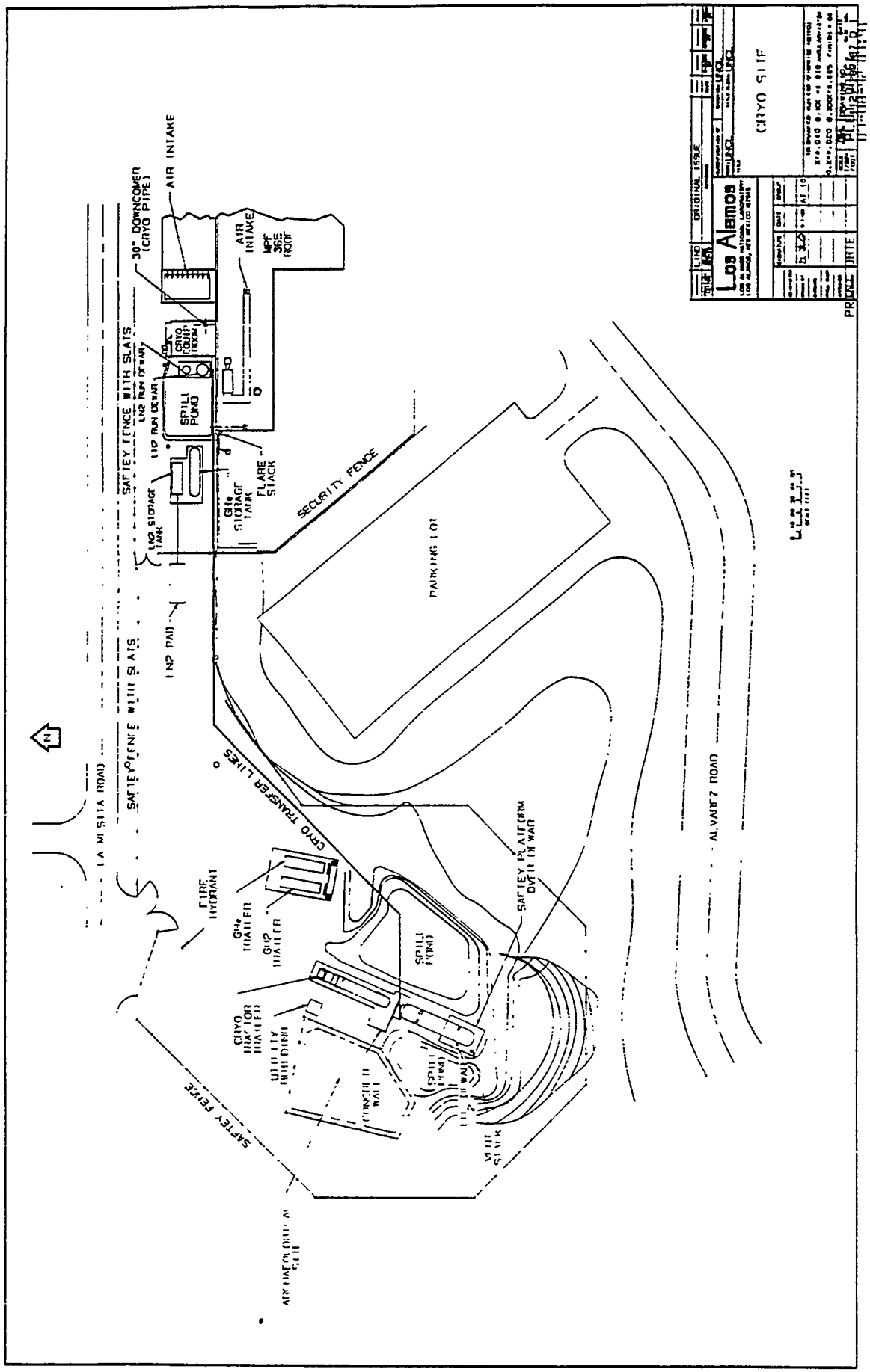

Fig. 4-48. Site plan for CCS.

hydrogen piping enters the equipment room or beam-tunnel area. All wall penetrations in the equipment room that face the LH_2 run dewar are sealed.

4.3.5.1 Project Requirements - The CCS is required for GTA operation at 24 MeV and will be used to cool the accelerator in experiments 2D through 3C, as identified in Table I-1. In the future upgrade of GTA to a beam energy of 100 MeV, modifying the CCS will be necessary to provide additional cooling capacity. Insofar as is possible, the CCS design has taken into account this future requirement in the sizing of lines and cryogenic storage capacity. However, because the originally planned power level and operating time for the 100-MeV GTA have been reduced and the conceptual design of the 100-MeV accelerator is under development, specifications for the expanded CCS design are incomplete, other than they must conform to the same siting safety envelope as for the CCS. A later revision of the FSAR will address the CCS modification required for operation of the full 100-MeV GTA.

4.3.5.2 System Performance - The major CCS performance requirements are as follows.

- *Cool down* - Cool down is to be performed at a controlled rate to maintain the coolant temperature rise at, or below, 50 K to prevent excessive thermal stress in the accelerator components. It is estimated that cool down of the accelerator from ambient temperature to LN_2 temperature at the maximum rate will be accomplished within ~8 hr, followed by cool down to the LH_2 heat exchanger output temperature in ~1 hr. Without a hold at LN_2 temperature, the entire cool down may be accomplished in ~8 hr.

- *Accelerator operation* - Helium coolant discharge temperatures are to be 38 K, or less, at helium flow rates up to 475 g/s.

- *Warm up* - Warm up of the accelerator from operating conditions to ambient temperature will be accomplished by using the warm-up heater at a controlled rate, which will maintain the coolant temperature drop at, or below, 50 K to prevent excessive thermal stress in the accelerator components. Warm up and recovery of helium to the helium storage tank at the maximum rate should be accomplished in ~8 hr.

- *Performance demonstration* - The above modes of operation were demonstrated before system acceptance by an accelerator load simulator. The simulated heat load was provided by the 40-kW warm-up heater and the simulated accelerator flow impedance (pressure drop) was provided by a throttling control valve connecting the helium supply and helium return lines in the beam tunnel.

- *Helium purifier* - The helium purifier is capable of reducing the concentration of helium contaminants, such as nitrogen, oxygen, and water in the entire helium storage and flow system to below 10 ppm.

- *Helium purge* - Evacuation and backfill combined with pressurization and venting allows the CCS, including both LH_2 dewars and piping, to be purged of air before operating fluids are introduced. Following the purge process, the purity of the fluid in the operating system is checked by mass spectrometer analysis to verify that the purge has been successful.

4.3.5.3 Design Considerations - The major overall design concerns are as follows:

- consider hydrogen safety, such as cleanliness, purging, venting, pressure-relief protection, control-system design, fire protection, grounding, and lightning protection;
- minimize hydrogen consumption;
- minimize thermal gradients and stresses in the cooling system and GTA loads;
- minimize electrical hazards;
- make the system reliable;
- properly design the control system for integration with the GTA host computer; and
- minimize technical and economic impact by considering future expansion of cooling capability in the system design.

A summary of the CCS safety features is given in Chapter 11, Section 11.9.

The CCS is designed to meet or exceed the seismic requirements of the UBC Zone 2B earthquake and to withstand a wind load of 93 mph in accordance with UCRL-15910. The CVI seismic analysis has been reviewed by a LANL specialist and a dynamic analysis has been performed that shows CCS meets the seismic requirements of UCRL-15910 for a moderate-hazard facility.

4.3.5.4 Component Description - This section describes the components for the CCS: cryogenic piping, cryogenic valves, LH_2 storage dewar, LH_2 run dewar and heat exchanger, hydrogen vents, LN_2 storage dewar, LN_2 run dewar and heat exchanger, circulation compressor, warm-up heater, helium storage and recovery system, helium purifier, and the vacuum pump. Figures 4-49 and 4-50 schematically show these components.

4.3.5.4.1 Cryogenic Piping - The analysis of the CCS for Phase 1 showed that it is feasible to size a major portion of the cryogenic piping system for future expansion. The design approach used to size the system is to install the greatest amount of piping for future expansion that is economically feasible, minimize heat leak and pressure drop, and minimize consumption of hydrogen and nitrogen.

Because of this approach, the cryogenic piping for the hydrogen, helium, and nitrogen systems will be the CVI standard vacuum-insulated piping with multi-layer thermal-radiation shielding. The cryogenic valves incorporated in the system are CVI standard valves. The CVI specification for the fabrication of the piping is in Appendix P.

The design, fabrication, and testing of the vacuum-insulated piping and all other process piping conforms to ANSI B31.3, "Petroleum Refinery Piping," including the latest applicable addenda at time of subcontract award.

The vacuum-insulated lines were delivered as factory-evacuated, -sealed, -tested, and -cleaned sections that were ready for service. Factory reliability is retained without the problems and increased cost inherent in field fabrication. Sections were joined by bayonet assemblies that provide reliable cryogenic connections without costly field welding, leak checking, cleaning, and insulating. Bayonet joints in the LH_2 transfer line will be seal-welded around their circumference as an additional safety measure to assure leak-tight joints. The welding did not have any adverse impact on the integrity/strength of the materials under cryogenic conditions. The area welded remained at ambient conditions. After all process vessel and piping connections and welds were completed, each process-flow circuit, which includes helium, hydrogen, nitrogen, natural gas, and instru-

ment air, will be separately isolated and pressurized with nitrogen gas to its design pressure. Both pressure retention and soap-bubble testing were used to detect and eliminate any leak. The leak test results are recorded in the CCS Checkout and Acceptance Test Procedure.

All cryogenic piping and valves are compatible with the intended service and design pressures proposed. Each separately fabricated piping section has ID plate specifying the information required. All system pressure-relief valves will be set as required by the design and in accordance with ANSI B31.3, Section 322.6.3.

4.3.5.4.2 Cryogenic Valves - All valves with a steady-state operating temperature of 80 K, or lower, are CVI V-1000 series valves.

The valve stem extension is a long, hollow, stainless steel barrel, machined to close tolerance and hard-chrome plated. The barrel fits closely within the body extension tube with a clearance of ~0.003 in. Heat conduction down the barrel and body extension tube maintains a gaseous condition in this small clearance space at all times. The extremely close fit of these two cylinders is key to preventing liquid cryogen from approaching the bonnet seal. This principle works even when the valve is inverted; however, all valves involving liquid cryogens are oriented with their stems up.

The stem seal in the uppermost part of the bonnet is a simple O-ring gland operating at ambient temperature. The heat leak down the stem is limited to conduction through the two thin wall tubes and the negligible cross section of static gas.

The cryogenic valves, which have a rated pressure of 600 psig, were fabricated and tested at the CVI plant in Columbus, Ohio. The valve assemblies are:

- Heliarc (tungsten inert gas) welded throughout;
- body cast and 100% radiographed;
- liquid-penetrant inspected throughout;
- leak-checked with mass spectrometer at its most sensitive setting;
- proof pressure-tested to code standards;
- positive seated and inspected for bubble-tight shutoff; and

- commercially cleaned for intended service.

CVI provided pneumatic or solenoid-operated actuators on the cryogenic valves as indicated on the process and instrumentation diagrams. Two basic types of actuators were used. One actuator will open or close an isolation valve by energizing or de-energizing an electric valve, which is in the pneumatic line to the actuator. Each pnuematic-controlled isolation valve has an open and closed limit switch. The other actuator controls positioning and responds to a 4- to 20-mA input signal. A signal change will move the valve stem to allow a greater or lesser flow through the valve. The actuators are designed for accurate performance and long life. With a minimum of attention, they are capable of continuous operation in hostile environments. They are insensitive to minor changes in air pressure and do not require air lubrication. Test results show that the actuators and positioners are capable of trouble-free performance for more than one million cycles. The expected number of cycles during a 10-yr CCS life is ~10,000. The applicable codes and standards for the proof testing of valves include: ASME Pressure Vessel Code Section VIII and Welding Code Section IX; ANSI Standard B31.1; American Standards Association (ASA) B16.5 Steel Pipe Flanges and Flanged Fittings, B16.9 Steel Buttwelded Fittings.

4.3.5.4.3 LH_2 Storage Dewar - The 28,000-gal LH_2 storage dewar, to be used for the CCS, is the vessel that was used at the LANL Nevada Site in the Rover Nuclear Rocket Program. Southwest Welding and Manufacturing Division of Yuba Consolidated Industries, Alhambra, California, built the vessel in 1961 in California and fabricated it according to Section VIII of the ASME Pressure Vessel Code. The total volume of the inner vessel is 30,800 gal, which provides an ullage volume of 2,800 gal when filled to the design value of 28,000 gal of LH_2. The maximum-allowable working pressure (MAWP) for the inner vessel was 116 psig. The inner vessel was hydrostatically tested to 174 psig at the time of manufacture. The MAWP for GTA use will be 25 psig, which is also the maximum pressure for CCS operations. The normal operating pressure will be <1 psig. The relief devices are on the opposite end of the dewar from the fill port, and they are not connected to the vent stack for the dewar. This arrangement will preclude a failure at one point from preventing the dewar's venting and draining.

The LH_2 storage dewar was placed into service at the Nevada Test Site in March 1962 and was used until 1967. Personnel, who were associated with the test operations involving this dewar, have estimated that during this period, the dewar was subjected to probably less than 10 thermal cycles (complete cool-down and warm-up cycles from 300 to 20 K and from 20 to 300 K). They also estimated that the dewar was subjected to a maximum of a few hundred pressure cycles in which the dewar pressure was raised from its normal standby pressure of a few psig to ~50 psig for a reactor test and then returned to its standby pressure of a few psig. Consequently, the potential for fatigue failure of the vessel is very low and the much lower MAWP will further reduce the potential for fatigue failure.

The vessel was transported to the GTA site by truck. It will be completely refurbished, outfitted with new safety devices, and pressure tested to 37.5 psig. The Laboratory's Pressure Vessel Safety committee has approved this pressure test to ensure safety at the CCS operating conditions. The new safety devices will be set at, or below, the 25 psig MAWP. ASME certification indicates that a pressure vessel has been built and inspected according to ASME codes (standards). The vessel remains a coded (certified) vessel until it is modified. After the pressure vessel is placed into service, ASME code requires that it be periodically inspected. (ASME requires an inspection every 5 yr that the vessel is in service, but Laboratory policy is to reinspect every 3 yr.) The reinspection involves examining welds, joints, and other critical items. Before the LH_2 storage dewar is returned to service, it must be reinspected in accordance with ASME code. This initial reinspection has been done, and the dewar will now be reinspected every 3 yr. The dewar will be pressure tested to 37.5 psig, and its relief devices will be set to operate at 25 psig (MAWP). Testing to 1.5 times the MAWP is in accordance with ASME code. Appendix Q contains a copy of the outline of the refurbishment and recertification program. SOPs for recertification will be based on the Kennedy Space Center Pressure Vessel/ System Recertification Handbook (KHB 1710.15B, October 6, 1988) to ensure that approved standards for recertification of a pressure vessel are met.

The inner tank is series-300 stainless steel, and the outer tank is carbon steel. The annular space is filled with perlite and is evacuated to reduce radiative heat loss. The overall dimensions of the dewar are approximately 12.5 ft in diameter

and 58 ft in length. Figure 4-51 shows the general arrangement of the vessel. The check-out procedure for the LH_2 storage dewar will include a vacuum test to verify the integrity of the perlite/vacuum insulation space. The vessel has a very low level of induced radioactivity (~1 mr/h on contact), which does not appear to present any significant handling or access problems. After the vessel arrived at the GTA site, an assessment of the induced radioactivity was made, and the vessel was labeled as a "controlled area," as per DOE Order 5480.11.

4.3.5.4.4 LH_2 Run Dewar and Heat Exchangers - Shown in Figs. 4-52 and 4-53, the LH_2 run dewar and internal heat exchangers provide the primary refrigeration for accelerator cool down from 80 K to 22 K, accelerator steady-state run period under load, and accelerator stand by at 22 K. The nominal refrigeration capacity of the LH_2 run dewar and heat exchangers is 40 kW. The run dewar is near the CCS equipment building and is a 4,050-gal vertical dewar with overall dimensions of approximately 9 ft in diameter and 18 ft in height. The dewar will not contain more than 1,500 gal of LH_2 during normal operation. Figure 4-51 shows the general arrangement of the LH_2 run dewar. Table IV-8 shows the process parameters for the LH_2 run dewar.

Table IV-8 Process Parameters for the LH_2 Run Dewar

Parameters	LH_2 Run Dewar
Design pressure	150 psig
Operating pressure	
Cryogen side	<1 psig
He side	320 psia
LH_2 capacity	4,050 gal
Operating temperature	20 K
Materials	
Inner vessel	304 stainless steel
Outer vessel	carbon steel

The run dewar is filled from the LH_2 storage dewar. The dewar can be filled and the liquid level controlled during accelerator operations. The design of the CCS allows the transfer of LH_2 from the run dewar back to the storage dewar by using helium gas to pressurize the run dewar.

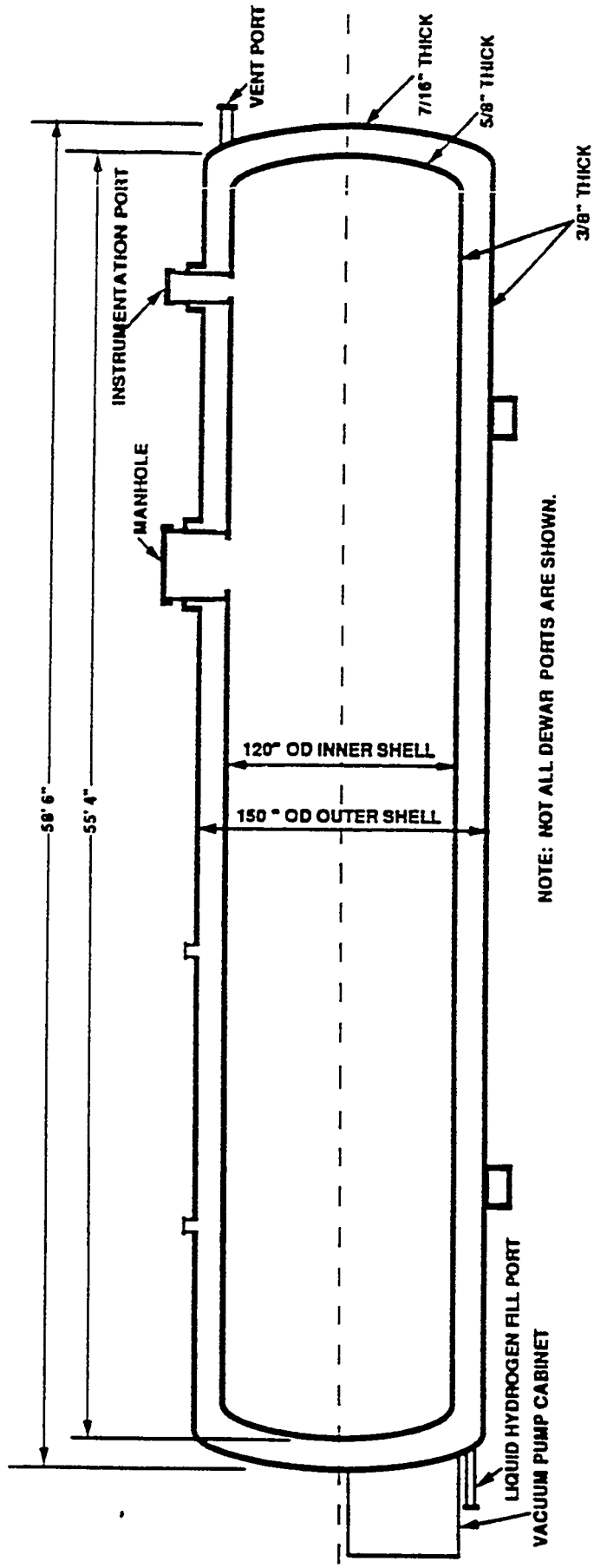

Fig. 4-51. General arrangement of the LH_2 storage dewar.

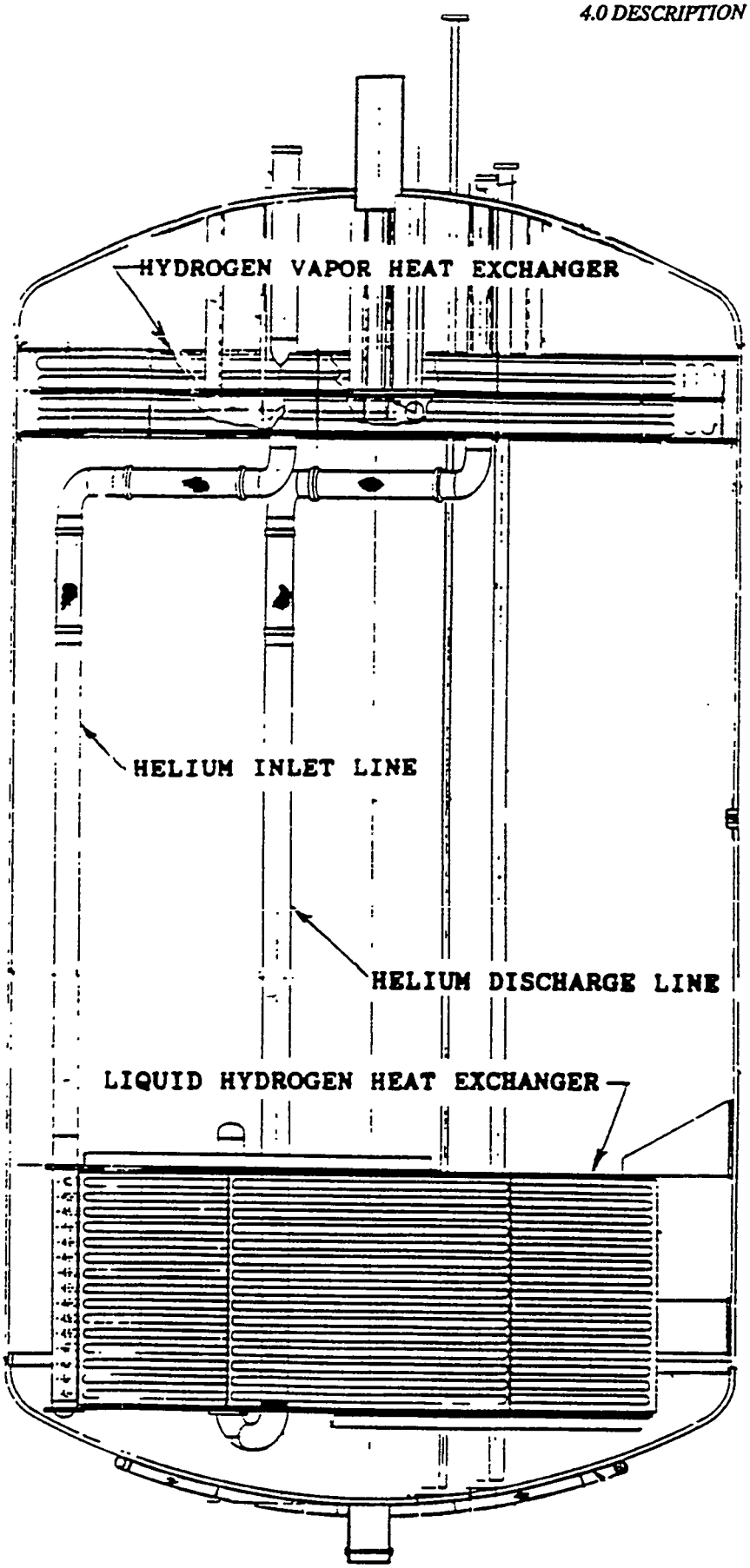

Fig. 4-52. Details of the LH_2 run dewar.

The LH_2 run dewar has an inner vessel and an outer vacuum jacket. The inner stainless steel vessel is approximately 8 ft in diameter and 16.5 ft in height and is designed for a MAWP of 150 psig. It is fabricated according to Section VIII of the ASME Pressure Vessel Code and code stamped. The outer vacuum jacket is constructed of carbon steel. In addition to the vacuum, the insulation system contains multilayer thermal-radiation shielding. The insulation system is designed to allow a maximum heat leak equivalent to a boiloff rate of less than 1% per day.

The dewar design is based on a static vacuum system similar to that for the vacuum-insulated pipe. The outer vacuum jacket contains a vacuum seal-off valve that allows a vacuum pump to be connected, if required. The vacuum jacket has been designed, fabricated, and tested according to Compressed Gas Association (CGA) standards rather than ASME Section VIII, because the outer vessel is part of the insulation vessel and is not a part of the pressure boundary of the process stream, which is what the ASME code addresses. The CGA, consequently, provides a standard that is used by industry for vacuum vessels. The loading of the outer vessel of the run dewar consists of a vacuum on the inner surface and atmospheric pressure on the outer surface of the wall of the vessel.

There are two heat exchangers contained in the LH_2 run dewar, as shown in Fig. 4-52. One is immersed in the LH_2, while the second is in the vapor space to obtain He precooling from the hydrogen boiloff vapors. The heat exchanger immersed in LH_2 is constructed of 15 parallel stainless steel tubes in a spiral pattern and manifolded to common inlet and outlet headers. The tubes are spaced approximately 1 in. apart to ensure a good flow of liquid toward the tubes and of vapor away from the tubes. Each tube is 1 in. o.d. with 0.0655 in. wall-thickness and approximately 70 ft long. The overall height of the fabricated tube bundle is approximately 32 in.

A copper finned-tube heat exchanger is mounted in the vapor space. This heat exchanger is approximately 10.5 in. high and is constructed of 4 pairs of concentrically coiled finned tubes in a flat spiral pattern and manifolded in 4 parallel flow paths. Each tube is 1.625 in. o.d. with 0.072 in. wall thickness and approxi-

mately 63 ft long with spiral-wound fins. The exchanger is sized to provide an approach temperature differential of 1 K on the warm side during steady-state conditions.

At full-system flow (475 g/s) and with an outlet temperature of 21 K, these heat exchangers will provide refrigeration of more than 40 kW with a pressure drop of approximately 0.5 psi. During the cool-down transient, these heat exchangers will provide a maximum of more than 100 kW of refrigeration at the higher-inlet temperatures and reduced flow rates limited by the circulating compressor during this phase of operation.

The run dewar has remote pressure and liquid-level readouts. The dewar can be filled and the level controlled during accelerator operation to maintain the nominal 1,500-gal level. The liquid-level sensor is connected through the computer control system to the hydrogen-fill control valve, and the LH_2 level can be controlled from the control console. A high-level liquid sensor in the vent stack will be interlocked with the shutoff valve of the storage dewar to prevent a liquid overflow from the vent stack.

4.3.5.4.5 Hydrogen Vents - The CCS generates hydrogen gas from three sources: the heat leak of the LH_2 storage dewar, which results in a normal LH_2 boiloff of about 1% per day; the LH_2 evaporation caused by cooling the 40-kW heat load; and the heat leak of the LH_2 run dewar. The large distance between the LH_2 storage and the run dewars requires two GH_2 vent systems. One will service each dewar.

Appendix R contains an analysis of the hydrogen vent rates and dispersion for both cool-down and steady-state operation of the CCS. This analysis shows that the LH_2 storage dewar vent does not require a flare. Thus, the LH_2 storage dewar will have an atmospheric vent for the boiloff gases. The vent system for the LH_2 run tank must accommodate the hydrogen gas generated during the cool-down phase and during steady-state operation at 21 K (when there is both a 40-kW heat load plus the cooling system heat leak). Calculations show that the quantity of gas generated during those conditions is large enough to require a flare system to prevent off-site migration of hydrogen.

The thermal radiation from operation of the flare stack will not result in skin burns to personnel within, or outside, the fenced boundary of the CCS. (Details of these calculations are given in Appendix R).

The vent stacks have check valves, and the flare stack has a molecular seal to prevent the back diffusion of air, either in the bulk stream or in the flow boundary layer. Provisions have been made for purging with GN_2 and GHe and for excluding rain or snow from the interior of the vent pipes. Purge gas to the vent stacks is supplied from high-pressure GHe and GN_2 tube trailers. The purge gas piping and valves supplying GHe and GN_2 to the vent stacks from the tube trailers are shown on Fig. 4-50. A "rain hat" cover is installed at the top of the LH_2 storage dewar vent stack. The flare stack on the LH_2 run dewar does not have a cover, but has a molecular seal assembly that incorporates a moisture-collection chamber and drain, which will prevent of rain or snow from reaching the vent line below this level.

4.3.5.4.6 LN_2 Storage Dewar - The LN_2 storage dewar is a 4,000-gal Interstate Commerce Commission (ICC)-approved LN_2 transport trailer, being used in a stationary mode, manufactured by Air Products Company. The storage dewar meets ASME Section VIII and ICC standards for LN_2 use. The code pressure rating is 75 psi. The normal operating pressure is up to 10 psi. The unit will be provided with all new gauges, hand and relief valves, and rupture disks.

4.3.5.4.7 LN_2 Run Dewar and Heat Exchanger - The LN_2 run dewar and heat exchanger provide refrigeration for cool down from ambient temperature to approximately 80 K and for the extended accelerator standby mode at 80 K. It is outside, near the equipment room and the LH_2 run dewar. It is an 1,800-gal vertical dewar. The overall dimensions are approximately 7 ft in diameter by 13 ft in height. Figure 4-54 shows the general arrangement for the LN_2 run dewar. Table IV-9 summarizes the process parameters for the LN_2 run dewar.

The LN_2 run dewar is filled from a LN_2 storage dewar. The run dewar can be filled from the storage dewar during accelerator operation. The LN_2 run dewar has an inner vessel and an outer vacuum jacket. The stainless steel inner vessel is approximately 6 ft in diameter and 11 ft in height. It is designed for an internal pressure of 20 psig and is sized to hold 1,000 gal of LN_2 above the heat

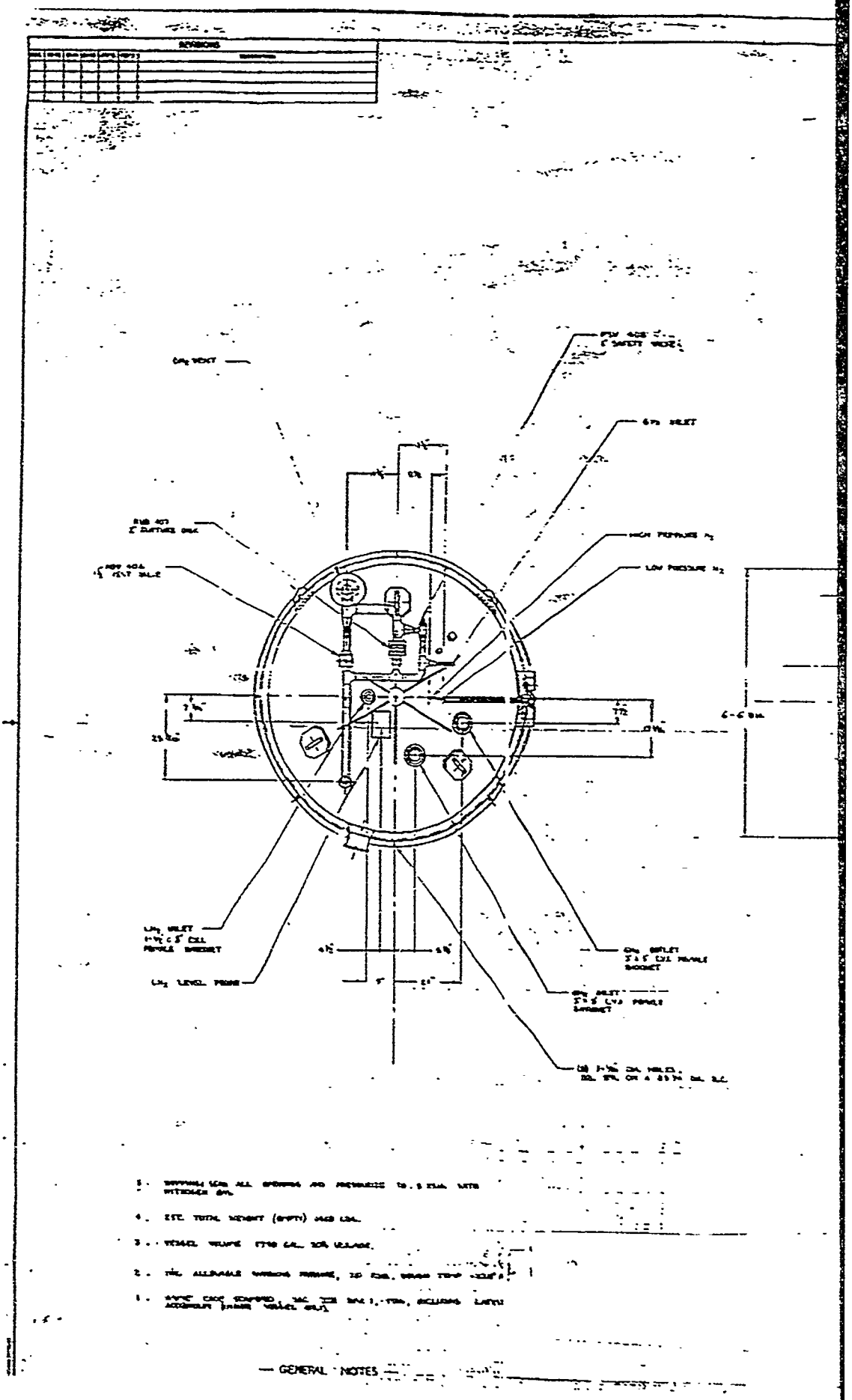

Fig. 4-54. General arrangement for the LN_2 run dewar.

Table IV-9 Process Parameters for the LN_2 Run Dewar

Process Parameters	LN_2 Run Dewar
Design pressure	20 psig
Operating pressure Cryogen side He side	 <1 psig 320 psia
LN_2 capacity	1,790 gal
Operating temperature	77 K
Materials Inner vessel Outer vessel	 304 stainless steel carbon steel

exchanger coil, with a 20% ullage space. Constructed of carbon steel, the outer vacuum jacket is designed for external pressure of 14 psig. In addition to the vacuum, the insulation system contains multilayer thermal-radiation shielding. The insulation system is designed to allow a maximum heat-leak equivalent to a boil-off rate of less than 0.5% per day. Boil-off vapors from all modes of operation are routed to an atmospheric vent.

The design of the dewar is based on a static vacuum system similar to the vacuum-insulated pipe design. The vacuum jacket contains a vacuum seal off-valve so a vacuum pump can be connected, if required. The inner vessel is designed, fabricated, tested, and code stamped according to ASME Section VIII, Division 1. The outer vacuum jacket will be designed, fabricated, and tested according to CGA standards.

The LN_2 heat exchanger (shown in Fig. 4-55) provides adequate refrigeration capacity to meet the performance requirements. It is constructed of 28 stainless steel parallel tubes in a spiral pattern and manifolded to common inlet and outlet headers. The tubes are spaced approximately 0.75 in. apart to ensure a good flow of liquid toward the tubes and of vapor away from the tubes. Each tube is 0.75-in. o.d. with 0.065 in. wall and approximately 50 ft long. The overall height of the fabricated tube bundle is approximately 42 in. During cool down, this heat exchanger will provide refrigeration of more than 100 kW with a pressure drop of approximately 0.2 psi.

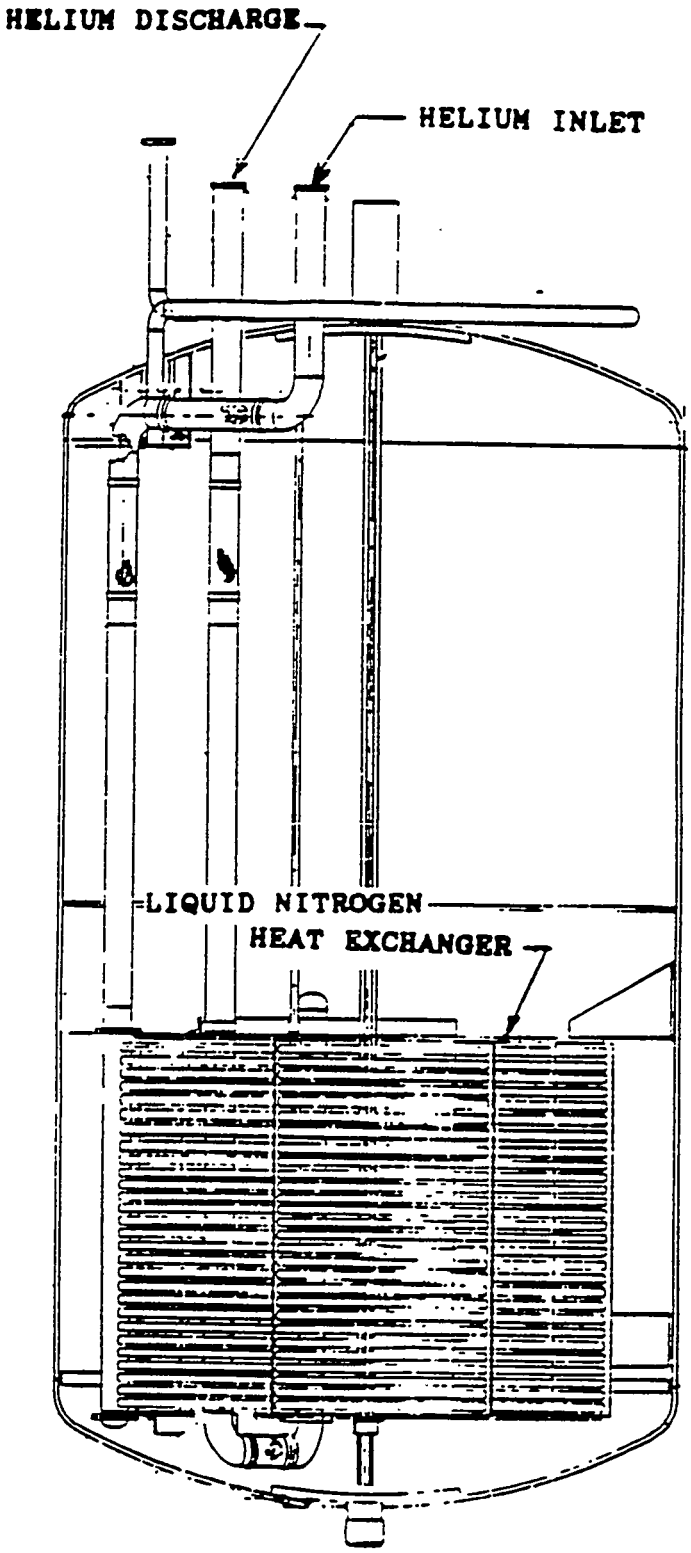

Fig. 4-55. Details of the LN_2 heat exchanger.

Local and remote readouts for pressure and liquid level are included with the dewar. The liquid-level sensor is connected through the CCS control system to a liquid-level controller.

4.3.5.4.8 Circulation Compressor - The flow circulation compressor is downstream of the LH_2 and LN_2 heat exchangers and circulates the helium coolant in the main accelerator loop. The centrifugal compressor is manufactured by the Barber Nichols Engineering Company. Figure 4-56 shows the general arrangement of the compressor and its enclosure. The motor and drive shaft are sealed within the helium coolant pressure envelope, and there are no external shaft seals.

The compressor is designed to operate at maximum efficiency when circulating 475 g/s of He gas at 20 K and 22 atm. The design operating speed is 13,500 rpm, which produces a pressure rise of 28 psi to accommodate the GTA heat load and pressure drop.

The compressor and its variable frequency drive is capable of continuously varying operating speed as long as the current remains within nonoverload conditions. To achieve the maximum mass flow rates and pressure rise at lower gas density conditions during cool down and warm up, the compressor speed may be increased to approximately 20,000 rpm. The specifications of the compressor are listed in Table IV-10.

Table IV-10 Circulation Compressor Specifications

Temperature	21 K inlet 22.1 K outlet
Pressure	290 psia inlet 318 psia outlet
Flow	1.05 lb/s (475 g/s)
Impeller size	3 in.
Pump type	full admission
Design speed Maximum speed	13,500 rpm 20,000 rpm
Design circulation efficiency	71 %
Design motor HP	4.1
Motor type	2-pole, 3-phase induction, squirrel-cage design, 400 Hz

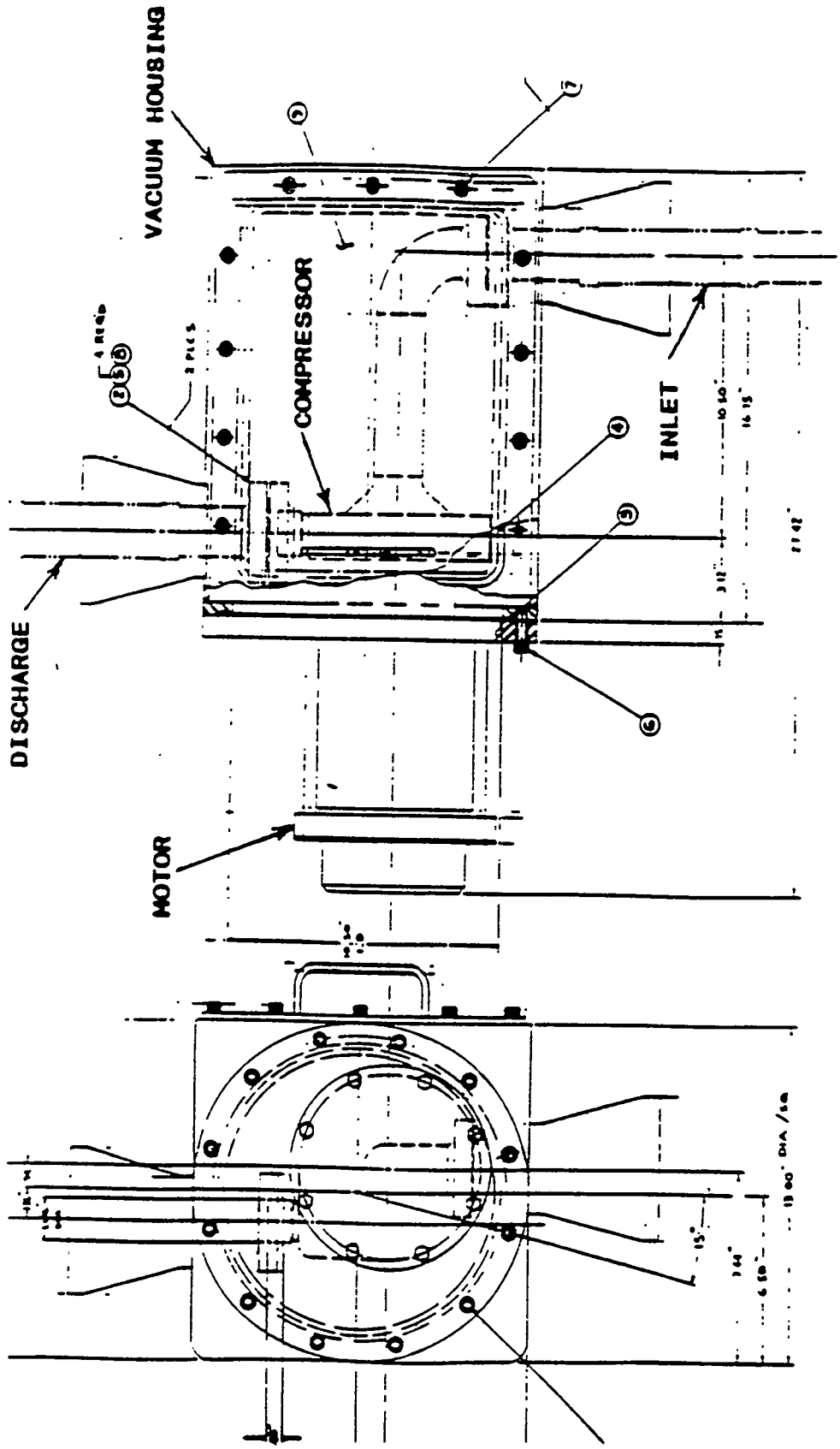

Fig. 4-56. General arrangement of the circulating compressor.

4.3.5.4.9 Warm-up Heater - The warm-up heater was sized on the basis of the transient analysis that requires system warm-up from 22 K to room temperature in approximately 8 hr. The heater is a 40-kW immersion-type heater and has all stainless steel construction. It has an 8-in. flange with 70-in. long elements with a power density of about 20 W/in.^{2}.

4.3.5.4.10 Helium-recovery System - The helium-recovery system consists of a helium storage and recovery tank, a helium-compressor system, a recovery heater, and the necessary piping and valving. The purifier can also be used with this system.

The helium-recovery tank is a carbon steel, horizontal cylinder, fabricated and code-stamped according to the ASME Pressure Vessel Code, Section VIII. The tank is approximately 94 in. in diameter and 30 ft long, which allows the cooling system to be filled to operating conditions while maintaining a positive pressure in the recovery tank. The MAWP is 250 psig. Figure 4-57 shows the general arrangement of this tank.

The helium-recovery compressor is a standard Henderson Compressor Company 3-cylinder, 2-stage oil-free compressor modified to accept variable suction pressure from one to 22 atm without overloading the first-stage cylinder, piston, and connecting rods. The pump displacement is 16 scfm, and it operates at 900 rpm from a 20-hp, 1,800-rpm, dripproof v-belt drive, 480-V, 3-phase, 60-Hz motor. The pump is water-cooled with an intercooler, between stages, and an aftercooler and requires a flow of 7.5 gal/min at 20 psig. Valving to the pump will allow the second stage to be bypassed, as required, during the charging and recovery operations. Figure 4-58 shows the general arrangement of the recovery compressor.

The 40-kW recovery heater is similar to the warm-up heater and can be fully controlled to ensure an inlet condition of ambient temperature at the compressor during the recovery of cryogenic helium from the main coolant loop to the helium storage tank.

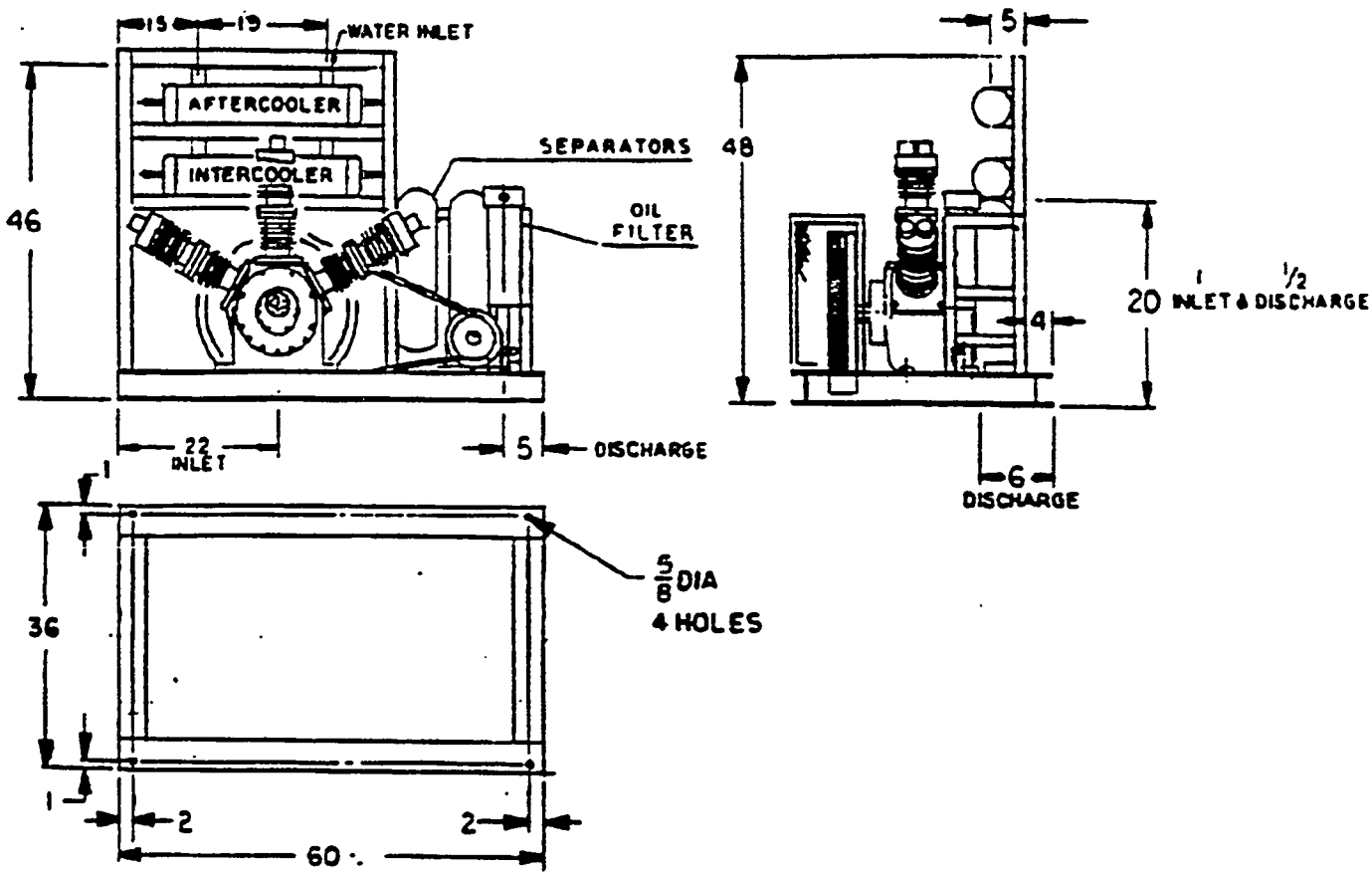

Fig. 4-58. General arrangement of the GHe recovery compressor.

4.3.5.4.11 Helium Purifier - The major components of the helium purifier are contained in a small LN_2 dewar and include a helium-to-helium counterflow heat exchanger, a helium-to-LN_2 heat exchanger, and an adsorbent bed. Figure 4-59 shows these components. The dewar is 28 in. in o.d. and 72 in. long.

The counterflow heat exchanger serves two purposes. First, when purifying He in a warm CCS, the heat exchanger permits He to leave the purifier as a warm, clean gas rather than as a cold, clean gas. Second, the heat exchanger recovers refrigeration if cold system He is to be cleaned. The cold stream leaving the exchanger would be at a temperature of approximately 100 K. The GHe-to-LN_2 heat exchanger completes cooling of the helium stream to the adsorber operating temperature near 80 K.

The heart of the purifier system is the adsorbent bed of a coconut-shell-base activated carbon. This material combines high activity with good hardness and has the particle size range of 8 x 14 US Mesh. The adsorber will include particulate filter media to prevent charcoal dust from leaving the adsorber vessel. The adsorbent bed is 8.3 in. in diameter by 12 in. long.

The adsorber will remove virtually all of the 50-ppm gaseous contaminants from a high-purity grade of helium, with the exception of hydrogen and neon. Neither of these trace gases is significant in this system. The adsorber can purify a helium stream with much higher concentrations of contaminants. The flow area required to keep pressure drop low and the length required to assure a high-removal efficiency determine the adsorber's size. Capacity was based on the quantity of contaminants in the helium used to charge the system and the quantity of contaminants anticipated to be in the system at the start of cleanup. The system was considered to be operated as a closed loop and no continuous source of contaminants was considered.

4.3.5.4.12 Vacuum Pump - A vacuum pump is incorporated in the system to permit CCS purging by evacuation and backfill. The vacuum pump, located in the equipment room, is sized to evacuate the system to 0.5 torr in 1 hr. A LN_2 cold trap eliminates potential oil-vapor backstreaming.

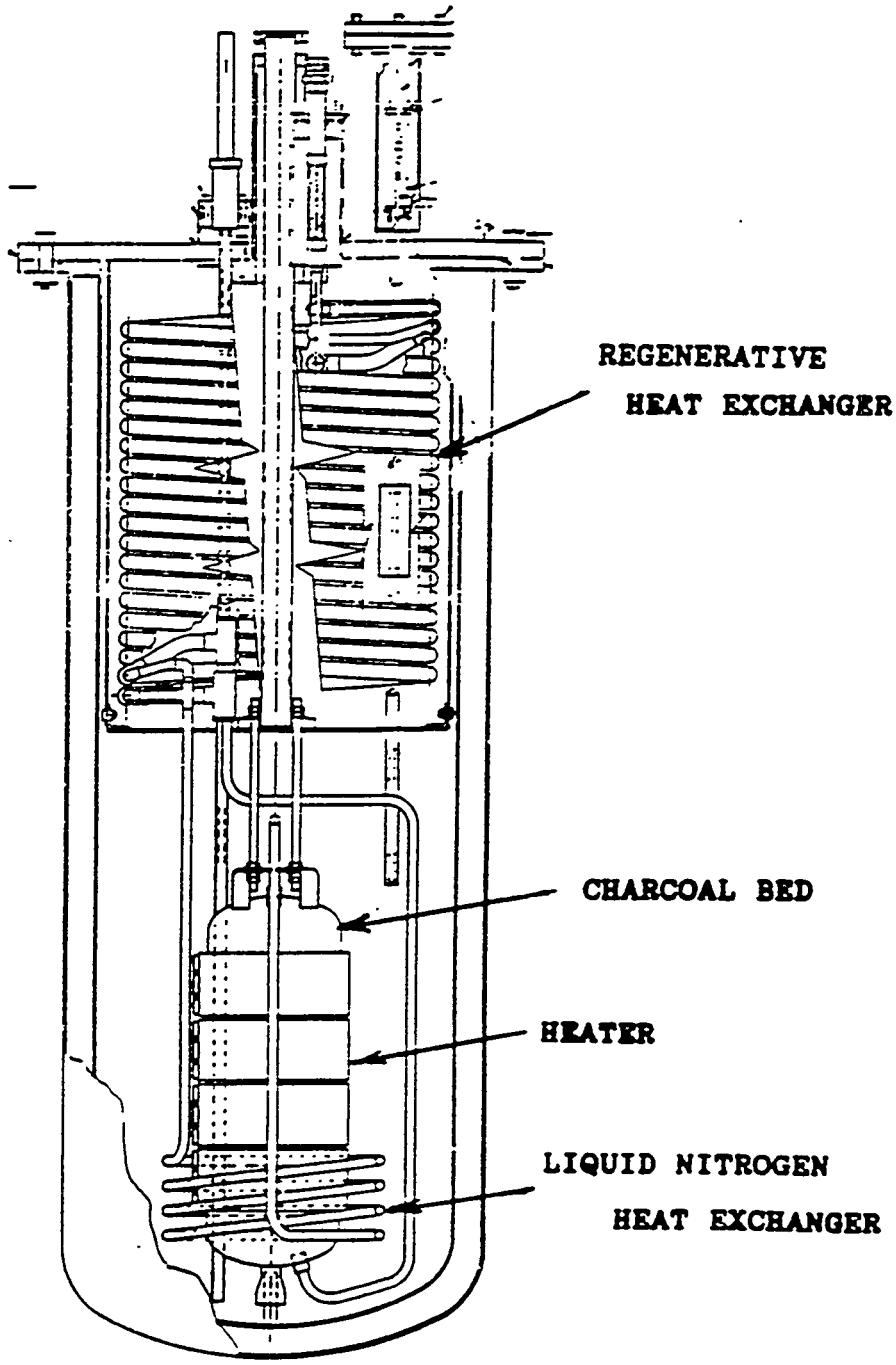

Fig. 4-59. Helium purifier.

4.3.5.4.13 GTA Simulator - After CVI installed and tested the CCS, CVI demonstrated the system performance by duplicating the GTA system heat load, flow rate, pressure drop, and rate of cool down with a heat load simulator. The heat load is simulated by the warm-up heater, which can be fully controlled from no load to 40-kW load. The accelerator pressure drop is simulated by a control valve in the beam tunnel. The simulator does not contain the accelerator copper masses, so the cool-down and warm-up capabilities are demonstrated by operating the CCS with a coolant temperature differential of 50 K during the cool-down and warm-up operations.

4.3.5.5 Cryogenic-cooling Distribution Manifold Subsystem

The cryogenic-cooling distribution manifold subsystem connects the main He flow loop of the CCS to the accelerator and provides accelerator cooling. The manifold has three parallel flow paths with a separate flow control for each of three vacuum vessels, which contain the following accelerator sections:

- Vessel 1 contains the RFQ and IMS sections;
- Vessel 2 contains the 2βl DTL section (modules 1-5); and
- Vessel 3 contains the 1βl DTL section (modules 6-10).

The manifold subsystem consists of cryogenic spool pieces that include 1.5-in. vacuum-jacketed cryogenic piping, remotely operated flow control and isolation valves, flow meters, and pressure and temperature instrumentation. Figure 4-60 is a process and instrumentation diagram showing the components of the manifold subsystem.

The manifold has been designed and fabricated by CVI as an extension of the CCS contract. All components meet the same specifications and standards as those described in Section 4.5.

4.3.5.6 Instrumentation and Controls

The CCS system will be instrumented for measuring temperature, pressure, differential pressure, flow rate, liquid level, electrical power, motor speed, and valve position as required for flexible, safe control. The CCS instrumentation and controls, supplied by CVI, allow remote operation by computer, either from the CCS equipment room or from the GTA control room. Table IV-11 is a summary of the instrumentation requirements. Instrumentation and control drawings are: process and instrumentation diagram of the

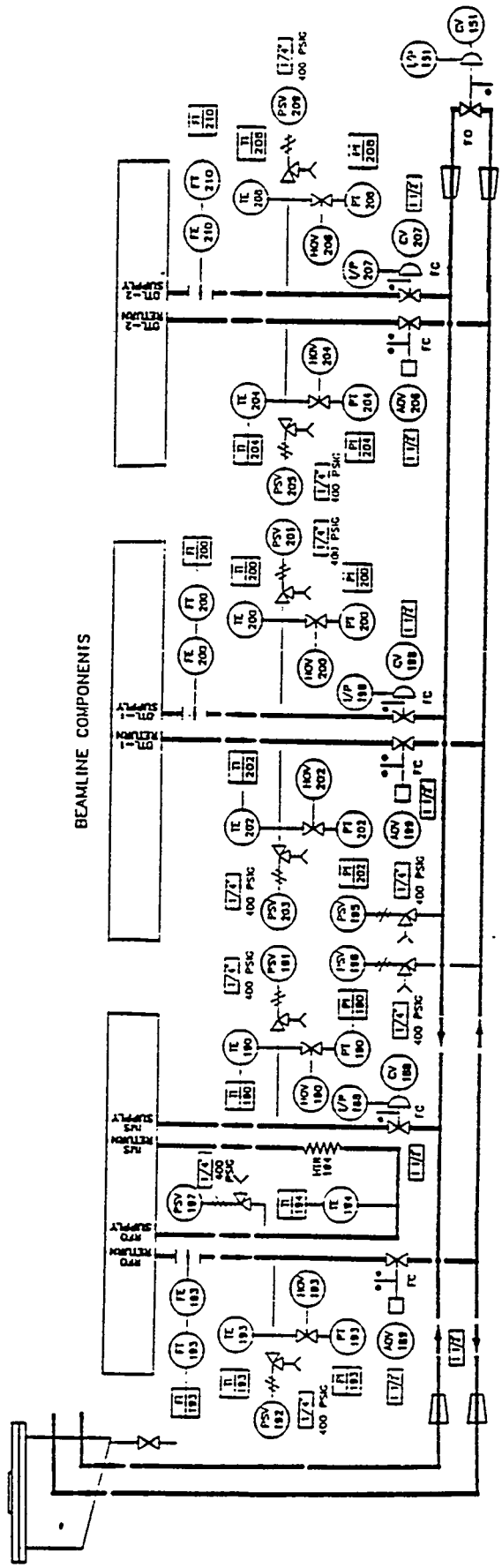

Fig. 4-60. Piping and instrumentation diagram of the cryogenic-cooling distribution manifold subsystem.

Table IV-11 Summary of CCS Instrumentation

Parameters	Sensor Type	Sensor Range
LH_2 storage dewar liquid level	capacitance	0-30,000 gal
LH_2 storage dewar pressure	pressure transmitter	0-100 psig
LH_2 transfer line temperature	silicon diode	330-10 K
LH_2 run tank pressure	pressure transmitter	0-100 psig
LH_2 run tank liquid level	capacitance	0-100%
LN_2 storage dewar liquid level	differential pressure	0-4,000 gal
LN_2 storage dewar pressure	pressure transmitter	0-100 psig
LN_2 transfer line temperature	silicon diode	330-10 K
LN_2 run tank pressure	pressure transmitter	0-25 psig
LN_2 run tank liquid level	capacitance	0-1,800 gal
GHe circulating compressor		
Inlet pressure	pressure transmitter	0-350 psig
Inlet temperature	silicon diode	330-10 K
Outlet pressure	pressure transmitter	0-350 psig
Outlet temperature	silicon diode	330-10 K
Input power (electrical)	wattmeter	0-7,500 W
Operating speed	tachometer	0-25,000 rpm
LH_2/GHe heat exchanger		
Inlet temperature	silicon diode	330-10 K
Inlet pressure	pressure transmitter	0-350 psig
GHe recover compressor		
Inlet temperature	gas bulb	–20 to +120°F
Inlet pressure	bourdon tube	0-500 psig
Outlet temperature	gas bulb	0-200°F
Outlet pressure	bourdon tube	0-500 psig
Warmup heater		
Outlet temperature	silicon diode	330-10 K
Outlet pressure	pressure transmitter	0-350 psig
Input power	wattmeter	0-40 KW
GHe supply pressure	pressure transmitter	0-350 psig
GHe circulation line		
U/S AOV 113 pressure	pressure transmitter	0-350 psig
CV 147 Delta-p	pressure transmitter	0-350 psig
U/S CV 147 temperature	silicon diode	330-10 K
Manifold inlet temperature	silicon diode	330-10 K
D/S CV 147 temperature	silicon diode	330-10 K
Total flow	turbine	50-500 g/s
Accelerator flow	turbine	50-500 g/s
Recovery heater outlet temperature	silicon diode	330-10 K
Purifier temperature	silicon diode	330-10 K
Purifier liquid level	capacitance	0-50 gal
GHe storage tank pressure	pressure transmitter	0-300 psig
All throttle valves in CCS	valve signal	% open
All remotely operated open/close valves in CCS	limit switches	open and close position
Hydrogen detectors	continuous sample	0-100% in air

helium flow loop (Fig. 4-49); process and instrumentation diagram of the CCS storage and supply (Fig. 4-50); and one-line power diagram (Fig. 4-61). The control console arrangement will be a 19-in. color monitor and standard IBM keyboard, which will allow the operator to interact with the CCS control system in the CCS equipment room. When the CCS control system is connected to the GTA control system (GTACS), a similar control station will be in the control room of the GTACS.

The CRT monitor of the personal computer (PC) can display pictorials of the various portions of the P&I diagrams. With this series of pictorials, an operator can display the pertinent equipment for a particular mode of operation. Figure 4-62 shows an example of what a pictorial may display, and Fig. 4-63 shows an example of an operational menu that the operator interface of the PC will display. The operator will be able to observe and control any point in the system by observing several pictorials. The computer control system will provide fault diagnosis programs to analyze the transducer outputs.

A stand-alone digital system consisting of an industrial PC and programmable logic controller (PLC) in the CCS equipment room will be used to control the CCS for the acceptance test. During this phase, the PLC will only be used to transmit operator information to the end devices; it will not provide any automatic sequencing of the system. The PLC is programmed in such a manner that interfacing it to the GTACS is possible, but not required. In this mode, the GTACS would send commands to and read back the status of the CCS. All of the control would reside within the PLC.

Following the acceptance test, a decision will be made that will determine whether to convert the control of the CCS over to the GTACS completely or to program the PLC to provide automatic control, with the GTACS only providing operator input into the system. The decision will be based upon the reliability of the GTACS at that point in time.

4.3.5.7 Codes and Standards

The CCS was designed according to the following codes and standards:

- ASME codes, especially Pressure Vessel Code (Sec. VIII) and Welding Code (Section IX);
- ANSI Standard B31.3 for Pressure Piping;
- Instrument Society of America (ISA) standard for Instruments;

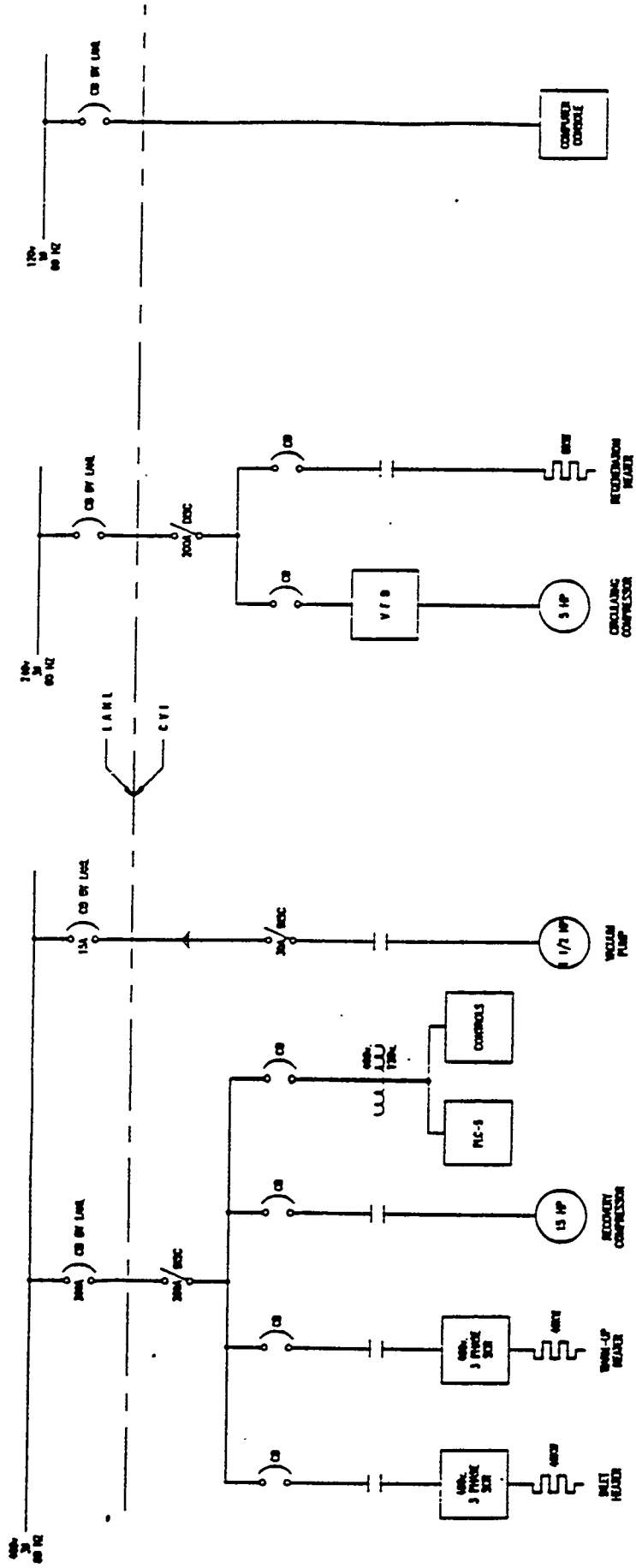

Fig. 4-61. One-line power diagram.

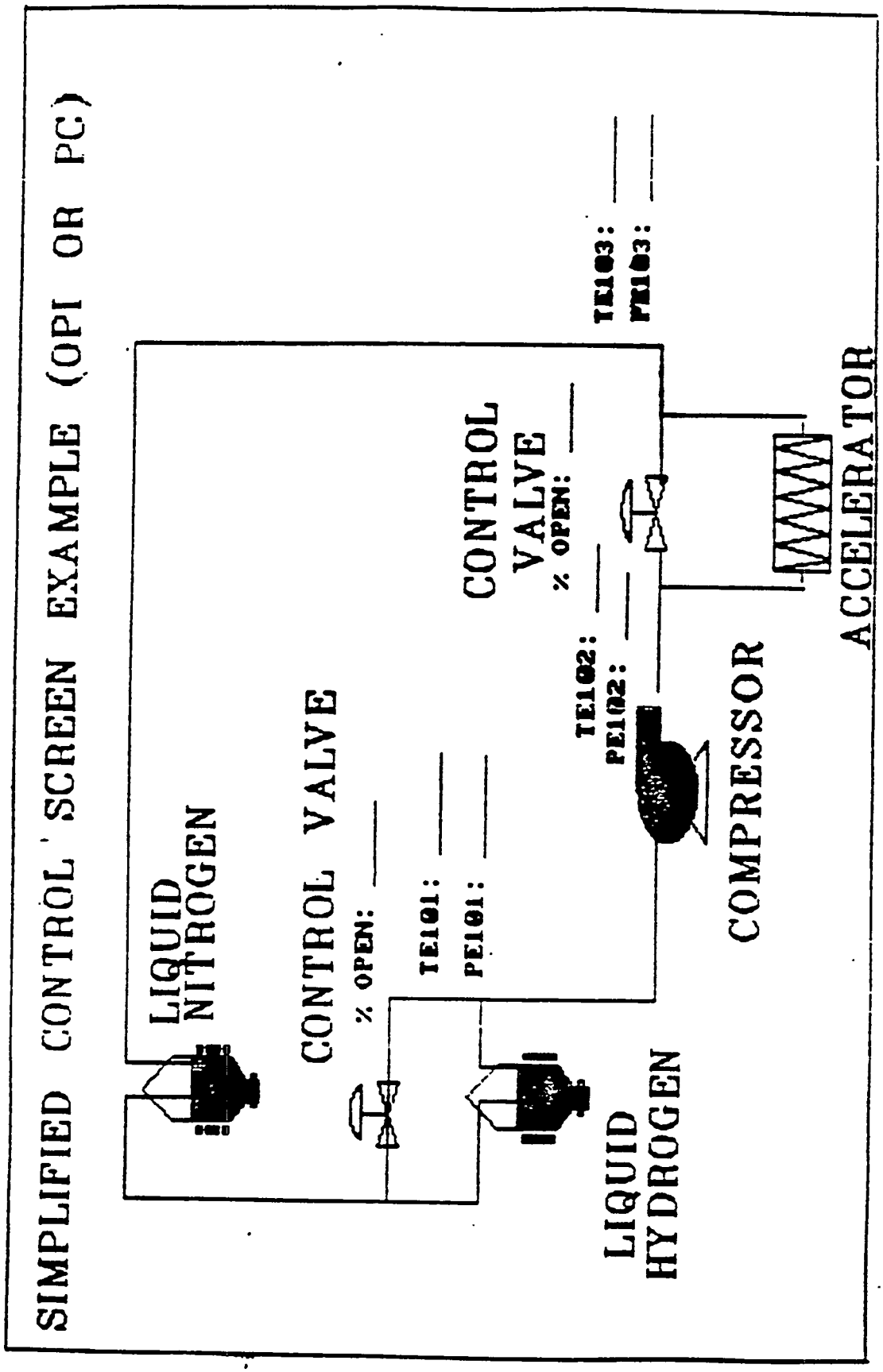

Fig. 4-62. Example of a pictorial computer.

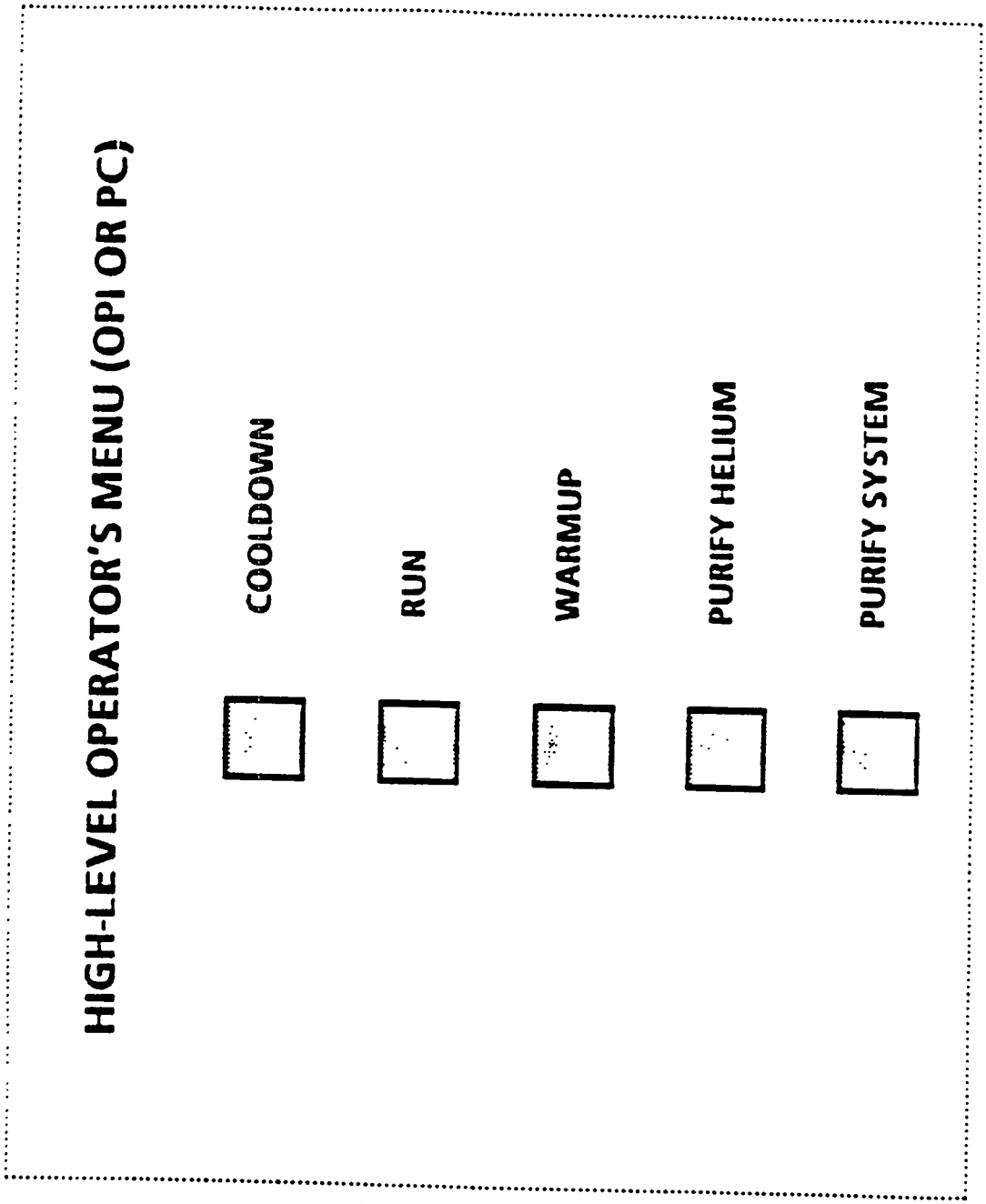

Fig. 4-63. Example of an operational mode on the computer.

- Joint Industrial Council (JIC) Standards for Electrical Drawings;
- National Electrical Manufacturers Association (NEMA) Standards for Electrical Motors and Cabinets;
- National Electric Code (NEC);
- requirements of OSHA;
- Flammable and Combustible Liquids Code, NFPA 30;
- Standard for Liquefied Hydrogen Systems at Consumer Sites, NFPA 50B;
- "Liquid Hydrogen, A Guide for Safe Handling and Storage of Liquid Hydrogen at LANL Facilities";
- American Standards Association (ASA) B16.5, Steel Pipe Flanges and Flanged Fittings, and B16.9, Steel Buttwelding Fittings;
- Lightning Protection Code, NFPA Standard No. 78; and
- CGA's "Safety Relief Device Standards."

4.4 Support Operations

Several activities take place in the GTA facility that are in support of, but not directly involved with, the experiment. The controls-and-automation and mechanical engineering sectors perform small-scale fabrication, module assembly, bench tests, and maintenance in lab areas on the third and fourth floors of the building. The RF sector has a support laboratory on the third floor and an equipment assembly area on the mezzanine. The RF assembly area on the mezzanine is used to support GTA and other programs. Vacuum, alignment and tuning laboratories, and a small machine shop are on the first floor. Cryogenic testing of assembled beamline components is done in the HPCTB on the first floor. The HPCTB is supplied with cryogenic helium by the 750-W gas refrigerator. The JCI crafts maintain a small temporary work area to support the installation of utilities and distribution equipment in support of the GTA experiments.

4.4.1 High Power Cryogenic Test Bed (HPCTB)

The HPCTB, previously called the Fusion Materials Irradiation Test drift tube linac tank, consists of a 13 ft long by 8 ft diameter cylindrical vacuum vessel, vacuum pumps and isolation valves, instrumentation and stepper motor cable feedthrough plates, and interface ports for connection to the 750-W cryogenic refrigerator. The ends of the vacuum vessel are closed by domed heads with vacuum o-ring sealed flanges. The south endwall must be removed and stored in a special holding fixture on the east side of the vessel to allow access to the interior of the tank. (See Fig. 4-64.)

The HPCTB is used to evaluate the performance of the DTL accelerator components under vacuum at cryogenic temperatures and at high RF power. The vacuum vessel is of sufficient size

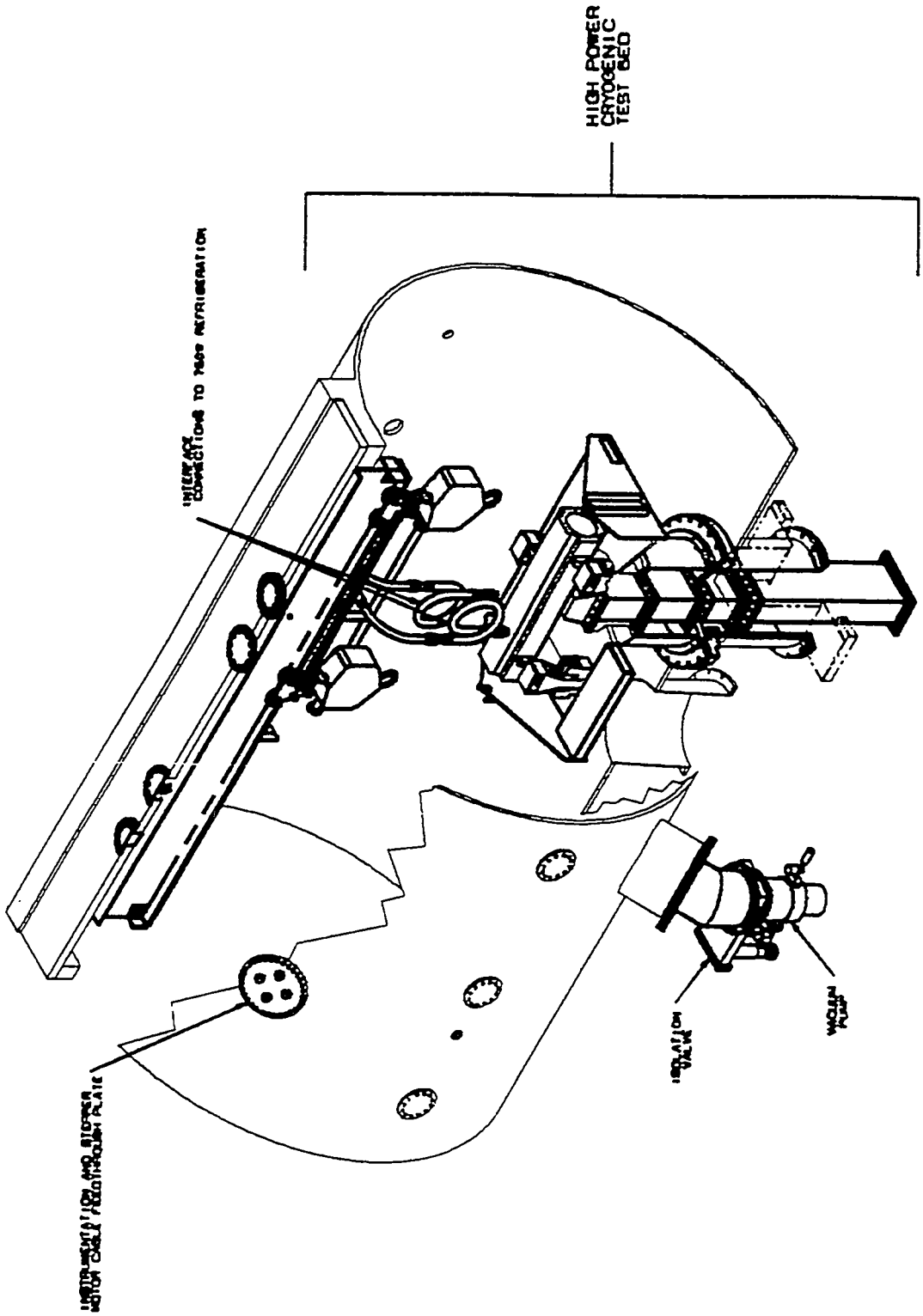

Fig. 4-64. HPCTB.

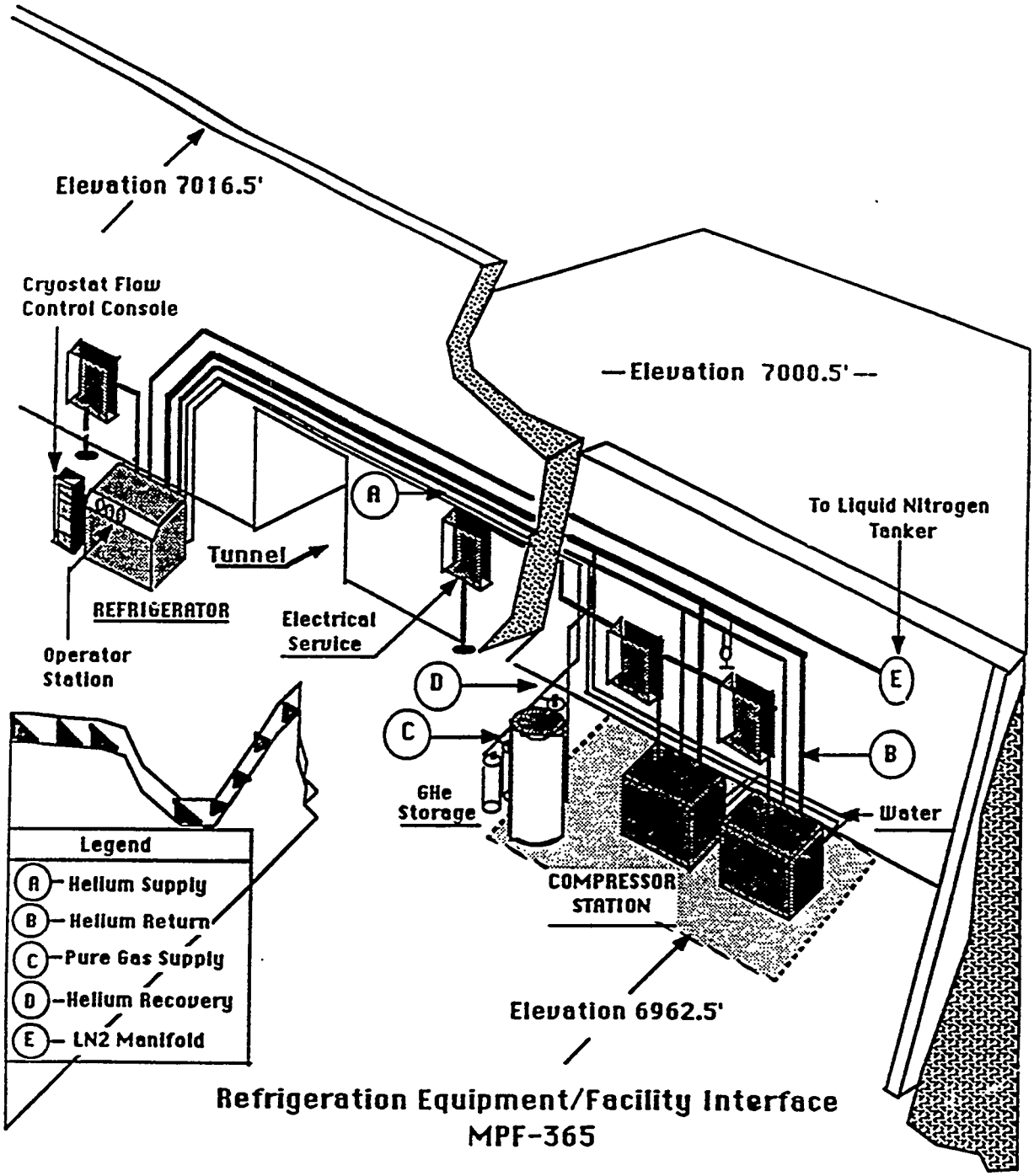

Fig. 4-65. 750-W refrigerator layout.

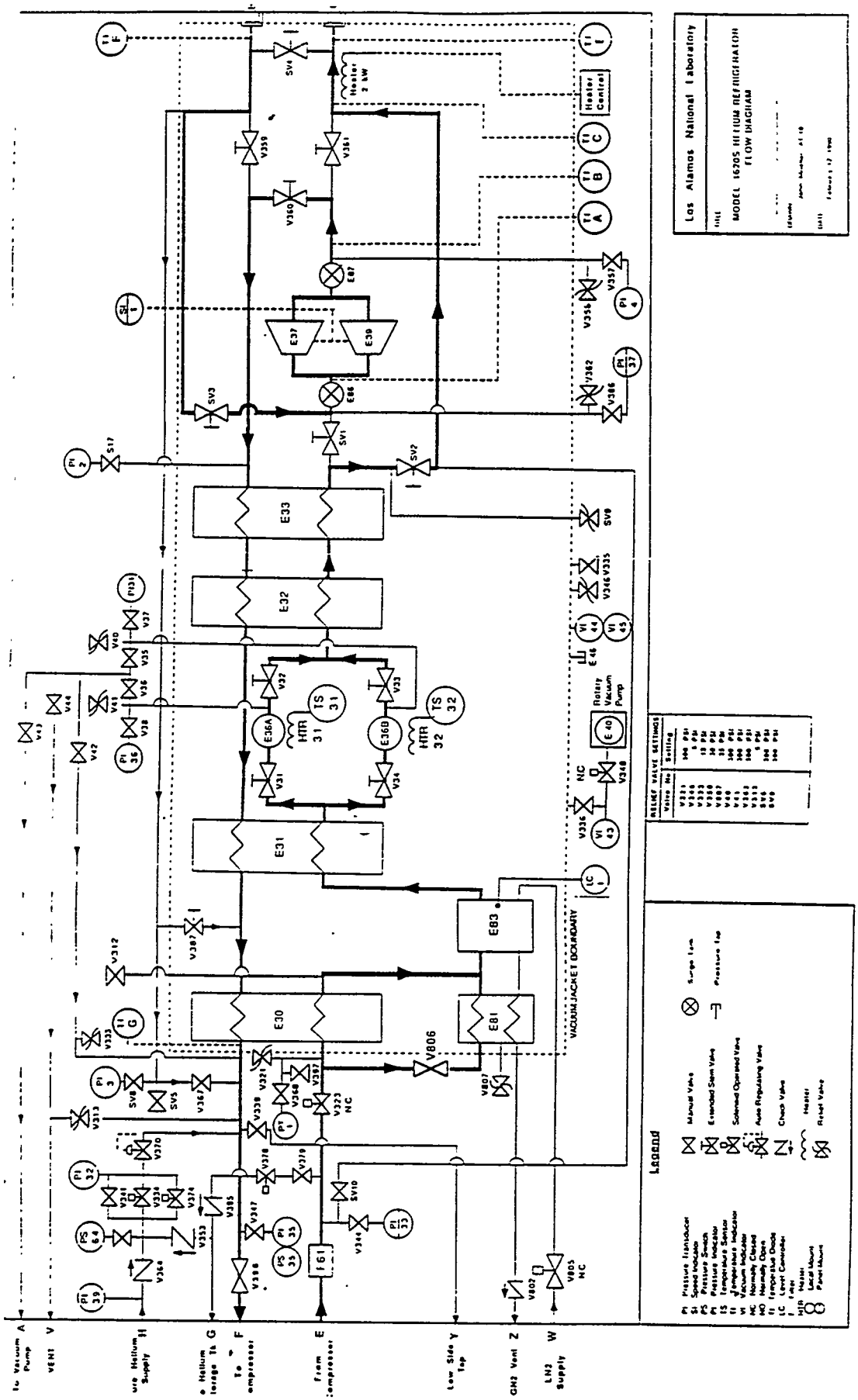

Fig. 4-66. 750-W refrigerator schematic.

5.0 DESCRIPTION OF OPERATIONS 1
5.1 Organization 1
5.2 Sequence of Experimental Operations 3
5.2.1 Experiments
Phase 0 Operations 5
5.2.1.1 GTA Experiments 1A, 1B, and 1C 5
5.2.1.2 GTA Experiment 2A 5
5.2.2 Experiments
Phase 2 Operations 8
5.2.2.1 GTA Experiment 2D 8
5.2.2.2 Description of GTA Experiments 3A, 3B, and 3C 8
5.2.2.3 Phase 2 Startup 12
5.2.2.4 Operations Staffing for Experiments 2D, 3A, 3B, and 3C 12
5.3 Experimental Equipment 14
5.3.1 Accelerator Hazards 14
5.3.1.1 Injector Hazards 14
5.3.1.2 RFQ/IMS Hazards 16
5.3.1.3 DTL Hazards 17
5.3.1.4 Activated Air 18
5.3.1.5 Tunnel Radiation 18
5.3.2 Output Optics 19
5.3.2.1 HEBT 19
5.3.2.1.1 Experiment 3A Commissioning 19
5.3.2.1.2 HEBT Operation 21
5.3.2.2 Bend 22
5.3.2.2.1 Bend Commissioning 22
5.3.2.2.2 Bend Operation 24
5.3.2.3 Telescope 25
5.3.2.3.1 Telescope Commissioning 25
5.3.2.3.2 Telescope Operation 27
5.3.2.4 Fast Steerer 27
5.3.2.4.1 Fast Steerer Commissioning 27
5.3.2.4.2 Fast Steerer Operation 28
5.3.3 Neutral Beam Hazards 29
5.3.3.1 Beam Heating 29
5.3.3.2 Direct and Indirect Ionizing Radiation Consideration 29
5.3.3.3 Nitrogen Release into the Vacuum 30
5.3.4 Experimental Diagnostics Hazards 33
5.4.1 Accelerator Controls 35
5.4.2 RF Power (Hazards) 36
5.4.2.1 Electric Shock 36
5.4.2.1.1 Klystron System 36
5.4.2.1.2 Tetrode System 38
5.4.2.2 Oil Spill 38
5.4.2.3 High Bay RF Amplifier Radiation 40
5.4.3 Accelerator Vacuum Hazard 41
5.4.4 Potentially Contaminated Water-cooling System 41
5.4.5 CCS 41
5.4.5.1 40-kW CCS Operation 41
5.4.5.1.1 Pressurization with GHe 42
5.4.5.1.2 Purification 43
5.4.5.1.3 Cool Down and Standby at 80 K 43
5.4.5.1.4 Cool Down and Standby at 22 K 44
5.4.5.1.5 Run 44
5.4.5.1.6 Warm-up 45
5.4.5.1.7 Depressurization 45
5.4.5.1.8 Purge and Fill of the LH2 System 45
5.4.5.1.9 CCS Readiness Tests 46

5.4.5.2 Chemical and Mechanical Processes for the CCS 48
5.4.5.3 CCS Control and Monitoring System 49
5.4.5.4 Hazardous Materials Handling 51
5.4.5.5 Control Operations Method 51
5.4.5.6 Safety-Related Monitoring and Control Systems 53
5.4.5.7 Operational Reliability and Maintenance 55
5.4.5.8 Operations or Shut Down Under Accidental or Abnormal Conditions 55
5.5 Types and Quantities of Hazardous Materials Used 57
5.5.1 Hazardous Materials used for the 40-kW CCS 57
5.5.2 Liquid Nitrogen 59
5.5.3 Gaseous and Liquid Hydrogen 59
5.5.4 Solvents 61
5.5.5 Compressed Gases 61
5.5.6 Chemicals in Laboratories and Shops 61
5.5.7 Cesium Chromate 62
5.5.8 Lead Shielding 62
5.5.9 Oils 62
5.5.10 Water Treatment Chemicals 63
5.6 Receiving, Storing, Handling, and Transferring Hazardous Materials 63
5.6.1 Liquid Nitrogen 63
5.6.2 Hydrogen 63
5.6.3 Compressed Gases
Helium, Argon, Sulfur Hexafluoride, and Nitrogen 64
5.6.4 Solvents 64
5.6.5 Chemicals 64
5.6.6 Cesium Chromate 65
5.6.7 Lead Shielding 65
5.7 Component Activation 65
5.8 Control Room and Associated Monitoring and Control Systems 65
5.8.1 All Accelerator Subsystems—Status and Control 67
5.8.2 High-voltage Interlocks 71
5.8.3 Radiation Protection Safety System 71
5.8.4 Run Permit 71
5.8.5 Fast Protect 73
5.8.6 Cryogenic Cooling System (CCS) 76
5.8.7 Control-room Operations 77
5.8.8 CCS Fire Alarm 77
5.8.9 Stack Vent Status 77
5.8.10 Surveillance TV Monitors 78
5.8.11 Hydrogen Monitors 78
5.8.12 Oxygen Monitors 78
5.8.13 Voice Paging 78
5.8.14 CCS Deluge Pull Boxes 78
5.9 Support Operations 78
5.9.1 High-power RF Testing and/or Conditioning of GTA Structures in the HPCTB 79
5.10 Operational Reliability and Maintenance 79
5.11 Safety-related Operations and Control Systems 81
5.11.1 RPSS 81
5.11.2 Electrical Interlocks 81
5.11.3 Laser Interlocks 82
5.11.4 CCS Operations 82
5.11.5 Fast Protect 82
5.11.6 Run Permit 82
5.11.7 Oxygen Monitors 82
5.11.8 Hydrogen Monitors 82
5.11.9 TV Surveillance 83
5.11.10 Tunnel Ventilation Monitors 83
5.11.11 Vacuum Interlocks 83

5.11.12 Gas Sampling 83
5.12 Safe Shut-down under Accident or Abnormal Operations 83

Figures and Tables

Fig. 5-1. Organization for GTA operations 2
Fig. 5-2. GTA experiments 1A, 1B, and 1C. 6
Fig. 5-3. GTA Experiment 2A 7
Fig. 5-4. GTA Experiment 2D 9
Fig. 5-5. Experiment 3A. 11
Fig. 5-6. Experiment 3C. 13
Fig. 5-7. Experiment 3B 23
Fig. 5-8. Experiment 3B installation 26
Fig. 5-9. Radiation dose vs. cooling time. 31
Fig. 5-10. Neutral Beam LN2 cooling system 32
5.4 Accelerator Support Systems 35
Fig. 5-11. Block diagram of klystron modulator safety interlock system. 37
Fig. 5-12. Block diagram of tetrode safety interlock system. 39
Fig. 5-13. Hazardous material storage 60
Fig. 5-14. Control room-second floor 66
Fig. 5-15. Console group one 68
Fig. 5-16. Console group two. 69
Fig. 5-17. Console group three. 70
Fig. 5-18. Run permit logic. 72
Fig. 5-19. Run permit switch and status panel. 74
Fig. 5-20. Fast protect implementation. 75
Fig. 5-21. HPCTB. 80

Table V-1 Experimental Objectives 3
Table V-2 Experimental Components 4
Table V-3 Hazardous Materials Used in MPF-365 58
Table V-4 Hazardous Materials Used in the Operation of the CCS 59
Table V-5 Summary of Operations and Systems to Maintain Safe Control of GTA 81

5.0 DESCRIPTION OF OPERATIONS

Chapter 5 describes Ground Test Accelerator (GTA) operations; the types and quantities of hazardous materials used; the receiving, storing, handling, and transferring of hazardous materials; the methods for maintaining safe control; the instrumentation and control operations; operational reliability and maintenance; and the safe shut-down procedures under accident or abnormal conditions. Two types of operations are performed: commissioning, in which initial testing of a particular device segment is accomplished, and normal operation in which the "segment" is used to provide beam for a downstream device.

5.1 Organization

Figure 5-1 shows the proposed organization for GTA operations. The guidelines for the organization are listed below.

- The Accelerator Technology (AT) division leader is responsible for GTA operations. The division leader establishes overall quality assurance, operational and safety policies through the GTA project office.

- The AT-10 experimental support section leader operates and maintains the experimental system with a small, permanent section of staff members and technicians. The experimental support section leader is responsible for health and safety at the facility.

- A member of the commissioning team coordinates the detailed schedule with the experimental support section leader. Experiments are to be conducted according to experimental-test plans that describe objectives, machine configuration, special procedures, and safety requirements. Experimental team personnel with the responsibility for developing a particular GTA component or function will be assigned as needed from the groups in AT, Physics, and Chemistry Laser Sciences divisions.

- The GTA safety officer is a member of the GTA project office and reports to the GTA program manager. In this role, the safety officer carries the division's responsibility for GTA safety. The safety officer advises on safety policy; establishes requirements for standard operating procedures (SOP) and special work permits (SWP); coordinates with operating, maintenance, and engineering sections on environmental, safety, and health (ES&H) matters. The safety officer interacts with Accelerator Health Protection, HS-1; Safety and Risk Assessment, HS-3; Industrial Hygiene, HS-5; Waste Management, EM-7; Environmental Protection, EM-8; and Fire Protection, ENG-8.

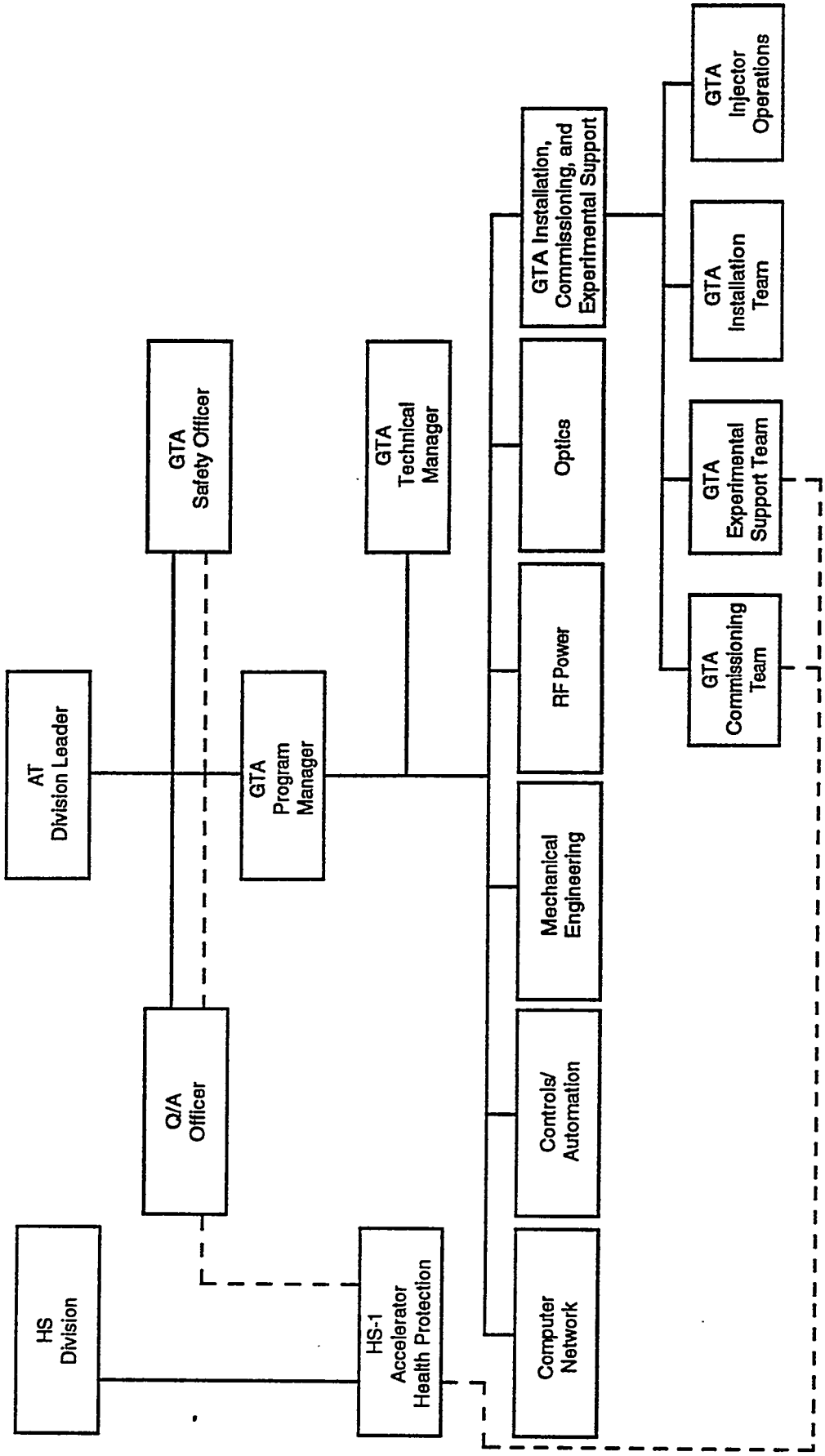

Fig. 5-1. Organization for GTA operations.

- HS-1 maintains the health physics surveillance of the accelerator operations at Technical Area (TA)-53, and reviews SOPs. In addition, the group is responsible for health physics services for the facility.

5.2 Sequence of Experimental Operations

A substantial part of GTA's objective is to test concepts and experimental hardware to develop a machine that reliably produces a very low emittance beam of H^0 particles. Experiments 1A, 1B, 1C, and 2A test the first four elements of the GTA accelerator from 0.035 through 3.2 MeV. Experiments 2D, 3A, 3B, and 3C test the accelerator and optics at 24 MeV. The experimental objectives are shown in Table V-1. Experiment 1A consisted of operating the GTA injector with a low-energy beam transport (LEBT) section at an energy of 35 keV. Injector operation in MPF-365 was approved by Los Alamos National Laboratory (LANL) HSE Division after conducting a readiness review in January 1990. Experiment 1A was completed in February 1991, and Experiment 1C was completed in April 1992. The 750-W cryogenic refrigerator is used during experiments 1B through 2A. While these initial experiments were underway, the 40-kW cryogenic cooling system was installed. The 40-kW cryogenic plant will be used for cooling the accelerator in experiments 2D through 3C. Experiment 2D will include the tested GTA injector, RFQ, IMS, and all 10 DTL modules. It will provide a 24-MeV H^- beam. Experiments 3A, 3B, and 3C will include the optical transport of the beam around the 180° bend and then through the telescope and final beam sensing. Table V-2 lists the components, beam energy, and current for experiments 1A through 3C. Addition experiments are anticipated to occur following experiments 2D through 3C. These additional experiments are currently identified as Phase 3 and will be addressed in a later revised SAR for the GTA.

Table V-1 Experimental Objectives

Experiment	System	Objective
1A	Injector with LEBT	Demonstrate design output from injector
1B	Injector with RFQ	Demonstrate design output from the RFQ
1C	Injector with RFQ and IMS	Demonstrate operation of IMS
2A	Injector, RFQ, IMS, and DTL module #1	Demonstrate design output from the DTL module #1
2D[a]	Injector, RFQ, IMS and DTL modules 1-10	Demonstrate design output from 24-MeV accelerator
3A	Injector, RFQ, IMS, DTL modules 1-10, HEBT, 180° bend	Demonstrate design output from HEBT and 180° bend
3B	Injector, RFQ, IMS, DTL modules 1-10, HEBT, 180° bend, telescope, steerer	Demonstrate design output from telescope and steerer
3C	Injector, RFQ, IMS, DTL modules 1-10, HEBT, 180° bend, telescope, steerer, beam sensing	Measure beam direction and focus using beam-sensing system

[a] The 40-kW cryogenic cooling system will be installed, checked out, and accepted before Experiment 2D begins.

Table V-2 Experimental Components

Components	Experiment 1A	Experiment 1B	Experiment 1C	Experiment 2A	Experiment 2D	Experiment 3A	Experiment 3B	Experiment 3C
SPS Injector	Yes	Yes	Yes	Yes	Yes	Yes	Yes	Yes
Cryogenic RFQ	No	Yes	Yes	Yes	Yes	Yes	Yes	Yes
D-plate diagnostics and beam stop	No	Yes	Yes	Yes	No	No	No	No
Beam stops	No*	On D-plate	On D-plate	On D-plate	Intermediate	Intermediate and 24-MeV final	24-MeV final	24-MeV final
IMS	No	No	Yes	Yes	Yes	Yes	Yes	Yes
Cryogenic DTL	No	No	No	DTL module 1	DTL modules 1-10	DTL modules 1-10	DTL modules 1-10	DTL modules 1-10
Beam energy (MeV)	0.035	2.5	2.5	3.18	24	24	24	24
Beam current (mA)	55	50	50	50	50	50	50	50
HEBT & 180° bend	No	No	No	No	No	Yes	Yes	Yes
24-MeV telescope & steerer	No	No	No	No	No	No	Yes	Yes
Beam sensing	No	No	No	No	No	No	No	Yes

*Beam stop not required for Experiment 1A due to low beam energy.

5.2.1 Experiments: Phase 0 Operations

The Phase 0 operations included experiments 1A, 1B, 1C, and 2A. These experiments tested cavity performance, beam dynamics, beam transport, and cryogenic cooling at low energy. Shown in Fig. 5-2 are the accelerating components for experiments 1A, 1B, and 1C which were on the north side of the beam tunnel, with the beam axis directed to the west. Experiment 1A was operated from a console near the injector in the tunnel. Experiment 1B was operated from an interim control site in the electronics rack area of the first floor. Starting with Experiment 1C, operations are conducted from the control room on the second floor. Descriptions of experiments 1A through 1C (see Fig. 5-2) and Experiment 2A (see Fig. 5-3) follow.

5.2.1.1 GTA Experiments 1A, 1B, and 1C - The objectives of these experiments were to characterize the accelerator performance and beam characteristics through 2.5 MeV. The principal components are the ion source, the LEBT that matches into the 425-MHz radio-frequency quadrupole (RFQ), the 2.5-MeV cryogenic RFQ, and the intertank matching section (IMS) that tailors the beam for acceptance by the 850-MHz drift-tube linac (DTL).

The injector was assembled on the beam line as the first installation in building MPF-365. Its stability, matching, and emittance were characterized. After assembly and tuning in the alignment laboratory, the cryogenic RFQ was added to the beam line and conditioned at cryogenic temperatures with high-power RF. A separate diagnostics station (D-plate), located in its own vacuum vessel, was connected to the end of the RFQ vacuum tank. The cryogenic interface between the injector and the RFQ was verified. The RFQ was cooled with a 750-W gaseous-He cryogenic refrigeration unit that allows RF conditioning up to 0.5% duty factor. At 2.5 MeV, the beam stop is relatively simple and neutron production is insignificant. After characterization of the 2.5-MeV, 50-mA beam from the RFQ, the IMS was added to the beam line, and the bunched beam was characterized in Experiment 1C, using the same 2.5-MeV diagnostic station used in Experiment 1B.

5.2.1.2 GTA Experiment 2A - The objective is to characterize the accelerator performance through the first DTL module. The new component is the cryogenic DTL module #1, which is added to the injector, RFQ, and IMS of Experiment 1. This module is a cryogenically cooled structure, with a periodicity of 2 $\beta\lambda$, that accelerates the beam to 3.2 MeV. The 750-W commercial He refrigerator is used to cool the RFQ, IMS and the DTL module to operating temperature.

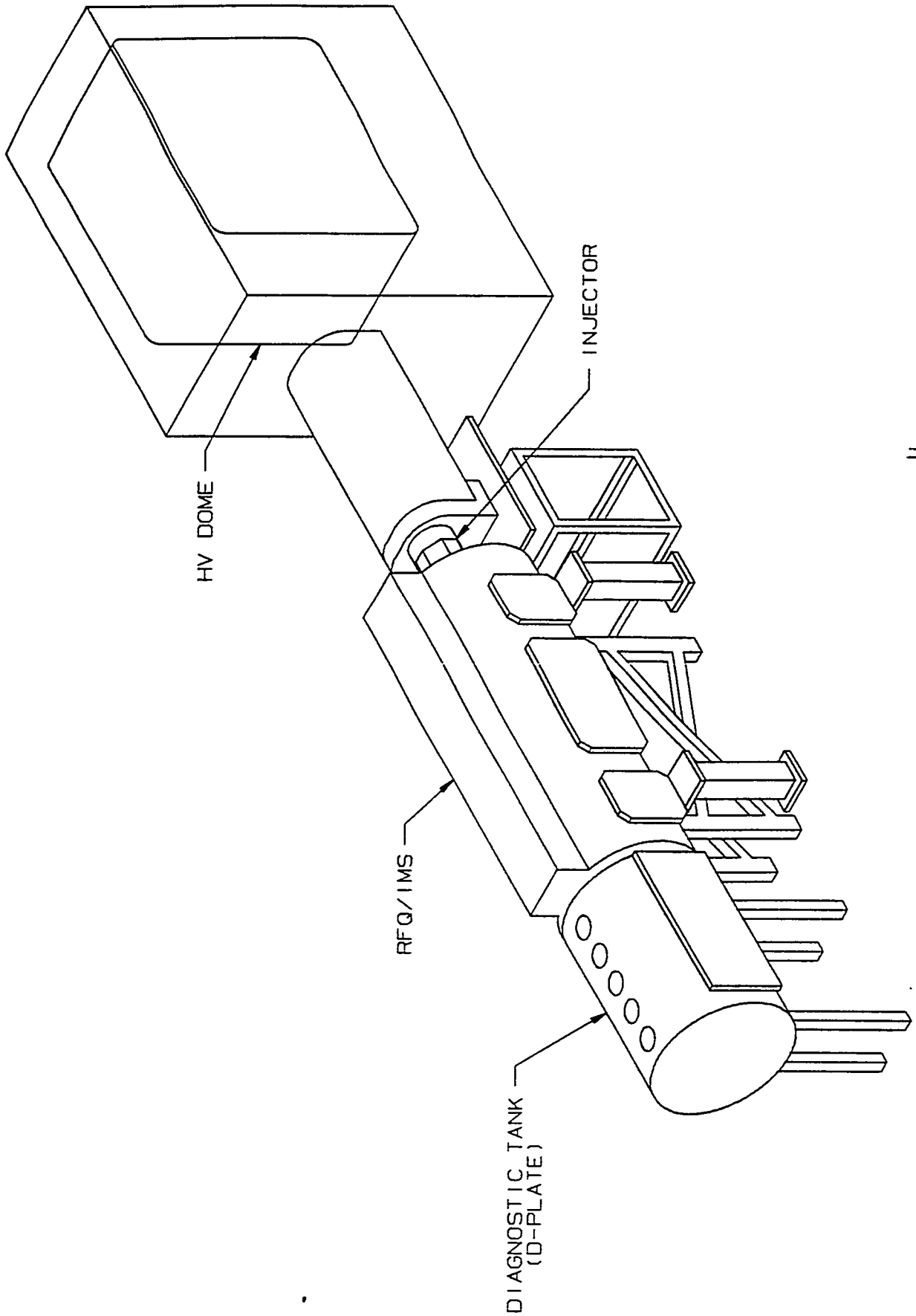

Fig. 5-2. GTA experiments 1A, 1B, and 1C.

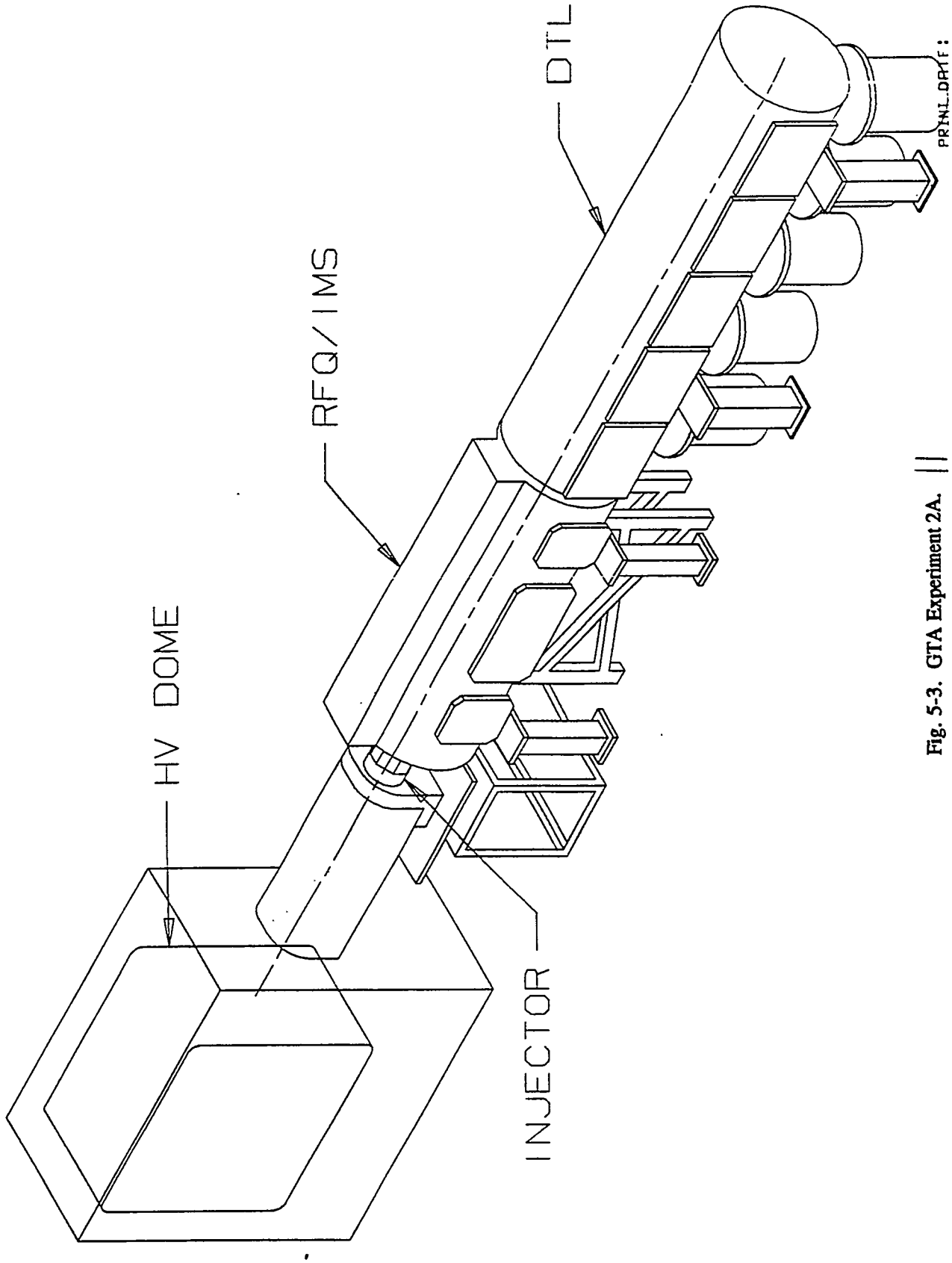

Fig. 5-3. GTA Experiment 2A.

5.2.2 Experiments: Phase 2 Operations

Phase 2 operations include experiments 2D, 3A, 3B, and 3C. These experiments test accelerator operation, optics, and beam sensing at 24 MeV. The component parameters for these experiments are listed in Table V-2. Table V-1 gives a summary of the objectives. The accelerator for Experiment 2A will be moved to the south side of the beam tunnel, and additional DTL modules will be installed to bring the energy up to 24 MeV. The 40-kW cryogenics plant will be used to cool the accelerator for these experiments.

5.2.2.1 GTA Experiment 2D - The objective of Experiment 2D is to characterize accelerator performance through 24 MeV. Ten 850-MHz DTL modules are installed in two vacuum vessels. The first five DTL modules are cryogenic-cooled structures with a periodicity of 2 $\beta\lambda$; they accelerate the beam to 8.5 MeV. The second five DTL modules are 1 $\beta\lambda$ cryogenic-cooled structures that accelerate the beam to 24 MeV. (See Fig. 5-4.)

The DTLs will be preassembled in the HPCTB just outside of the beam tunnel. The 750-W cryogenic-cooling system lines extend into this area, so the structures can be cooled and RF-conditioned at 850 MHz before installation on the beam line. After Experiment 2A, the accelerator will be moved to the south side of the beam tunnel, and the next four modules of the 2 $\beta\lambda$ DTL and the five 1 $\beta\lambda$ modules will be installed and commissioned to produce an output energy of 24 MeV. All moves will be made by qualified personnel; crane operators will be trained in crane operations as required by the Laboratory.

Diagnostics beam lines will be installed at the output of the DTL. One of the diagnostics beam lines will transport the beam to the intermediate beam stop as shown in Fig 5-4. This beam stop will be used for experiments 2D and 3A. The other beam line will transport the beam to a slit assembly and collector assembly.

5.2.2.2 Description of GTA Experiments 3A, 3B, and 3C - The objectives of these experiments are:

- Match the 24-MeV beam from the DTL to the expanding telescope and produce a low-divergence beam with a 12.5-cm rms radius.
- Demonstrate the effectiveness of electromagnetic elements for correcting imperfections and geometric aberrations.

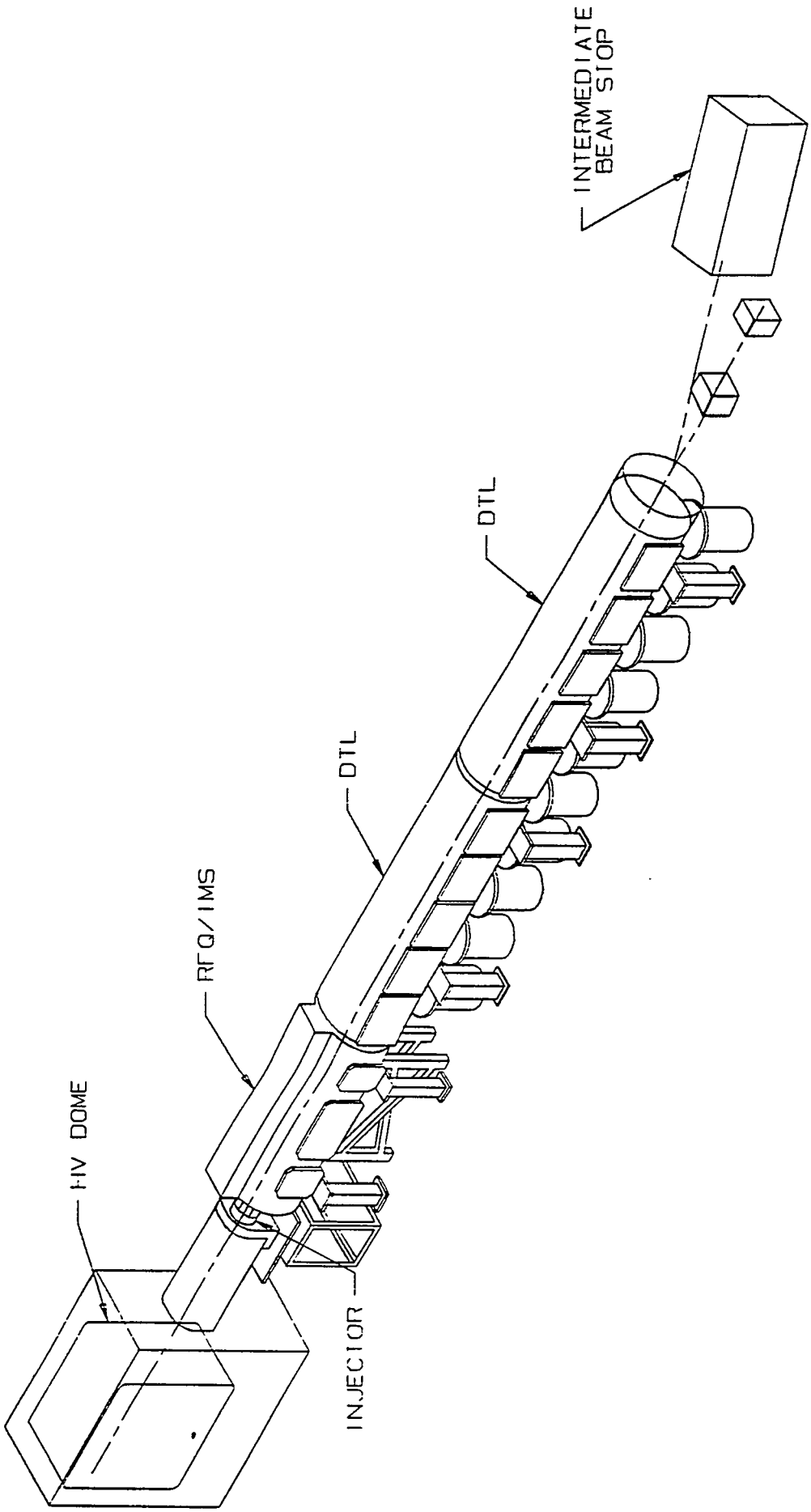

Fig. 5-4. GTA Experiment 2D.

- Study the effectiveness of the momentum compactors for telescope and steerer chromatic aberration reduction.
- Demonstrate fast-steering technology with a steerer magnet of low-aberration content.
- Demonstrate focus correction with both steered and unsteered beam.
- Evaluate the effect of space charge on beam divergence and aberration content.
- Demonstrate neutral beam focus and direction measurement.

The high-energy beam transport line (HEBT), 180° bend, telescope eyepiece, telescope objective magnets, steering magnets, corrector magnets, beam-characterization system, beam-sensing system, output beam tube, and final large-area beam stop, will be installed sequentially. The HEBT will first be commissioned by installing the 2D offset line at the HEBT end. Next the bend will be installed. The 2D offset line will be moved to the output of the 180° bend and a spectrometer installed. All installation will be made by qualified personnel. All crane operations will be performed by trained personnel. Installation of the HEBT, 180° bend, intermediate beam stop, and diagnostics will follow the completion of Experiment 2D. After Experiment 2D the accelerator is a user device; it provides a beam for the experiments that follow. Characterization of the beam out of the 180° bend is accomplished in Experiment 3A. Diagnostic beam lines will transport the beam to the intermediate beam stop and the spectrometer. (See Fig. 5-5.)

The telescope and steerer will then be installed and commissioned (Experiment 3B) using an extension of the pinhole and image-processing techniques, which were developed in the LANL telescope experiments at Argonne National Laboratory (ANL). A diagnostic pinhole plate will be located at the position of the neutralizer station; the detector and camera station will be 34 m downstream. The beam characterization pinhole plate will operate at a very low duty factor, 0.02%. The beam stops installed for Experiment 3 are only for 24-MeV operation.

Once the beam has been fully characterized, the wire and fluorescent fiber offset grid (WAFFOG) system will measure absolute beam direction and focus in Experiment 3C. This system will incorporate a bore-sight laser and new technologies to provide reference direction measurements. Fast-steerer control will be derived from the WAFFOG and laser direction information. Tests will be performed with the accelerator operating at

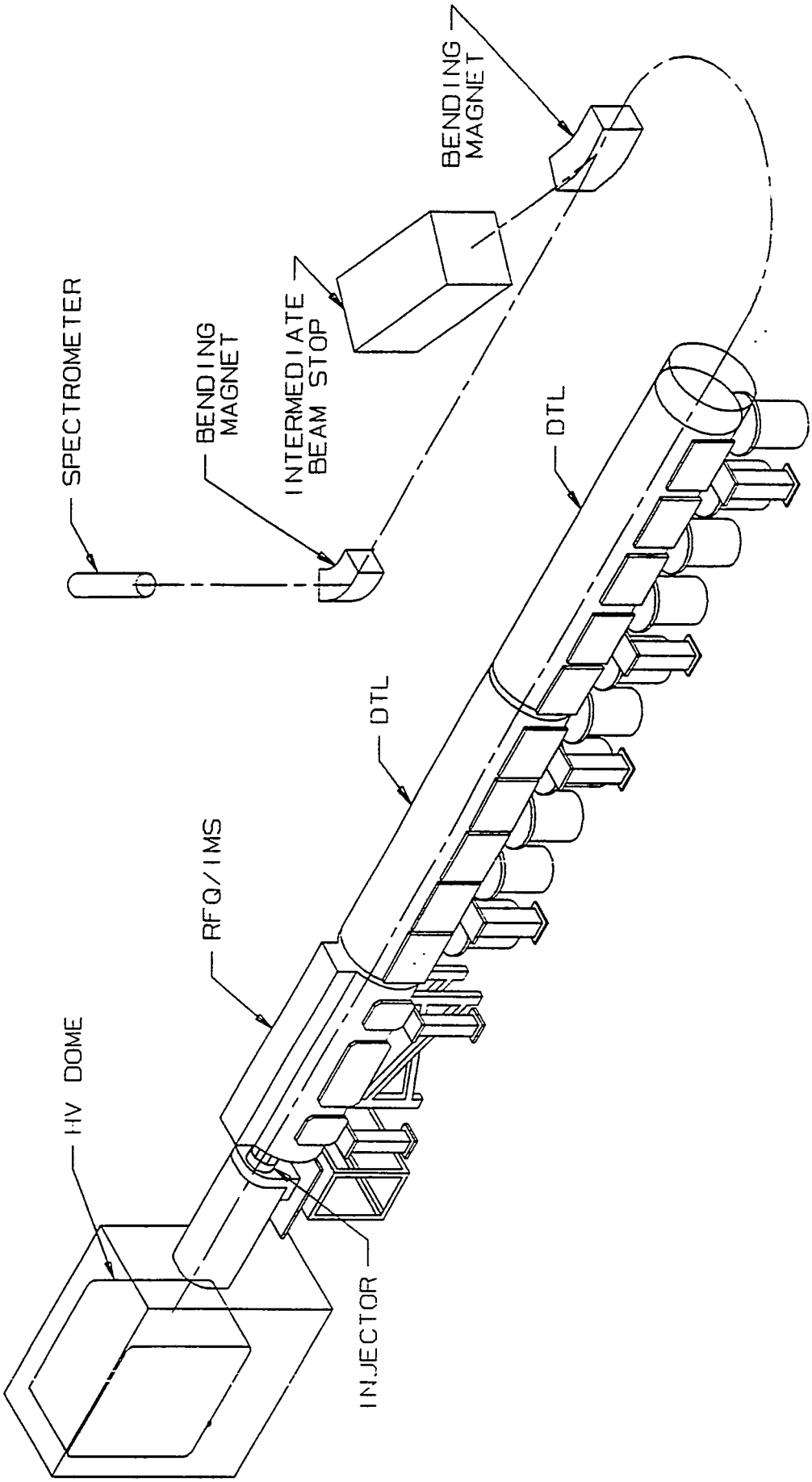

Fig. 5-5. Experiment 3A.

0.2% duty factor with operations limited to 30 min periods. A one-time test will be performed with the accelerator at the full 2% duty factor for a short period. Figure 5-6 shows the equipment layouts for experiments 3B and 3C.

5.2.2.3 Phase 2 Startup - Startup during Phase 2 is initiated by meeting the requirements of the hard-wire radiation personnel safety system (RPSS), (see Appendix T), the fast protect system, the computer-controlled run permit system, and by meeting the operational safety requirements (OSR) discussed in Chapter 8. Once this is accomplished, the system is safe, and RF power and beam extraction may be applied to generate the beam pulses.

5.2.2.4 Operations Staffing for Experiments 2D, 3A, 3B, and 3C - The operating plan for each experimental phase involves four 16-hr shifts per week during which beam operation can be provided on demand. There are also five 8-hr shifts surrounding the operating shifts that will be used for a standby mode (with the accelerator under vacuum, cold, and RF conditioning).

The operations crew will consist of a shift supervisor and ~4 operators who will have specific responsibilities during the shift. The positions and their responsibilities are as follows:

- The shift supervisor is responsible for all operations; his duties are specified in the "GTA Shift Supervisors Manual."
- The injector operator will be responsible for maintaining the quality of the input beam to the accelerator.
- The RF-power operator will be responsible for providing the RF power to the accelerator at the correct amplitude and phase.
- The controls interface operator will be responsible for ensuring that the controls screens and the controls circuits are working properly (often by providing electrical trouble-shooting).
- A mechanical specialist will be responsible for the supporting systems, such as vacuum, cryogenic cooling, and water cooling.

In addition to the operators, one or more experimentalists from the GTA commissioning team will be present for all beam operations. HS-1 radiation control technicians will be present for all startup and off-normal operations. The safety requirements are given in the SOPs for the pertinent subsystems.

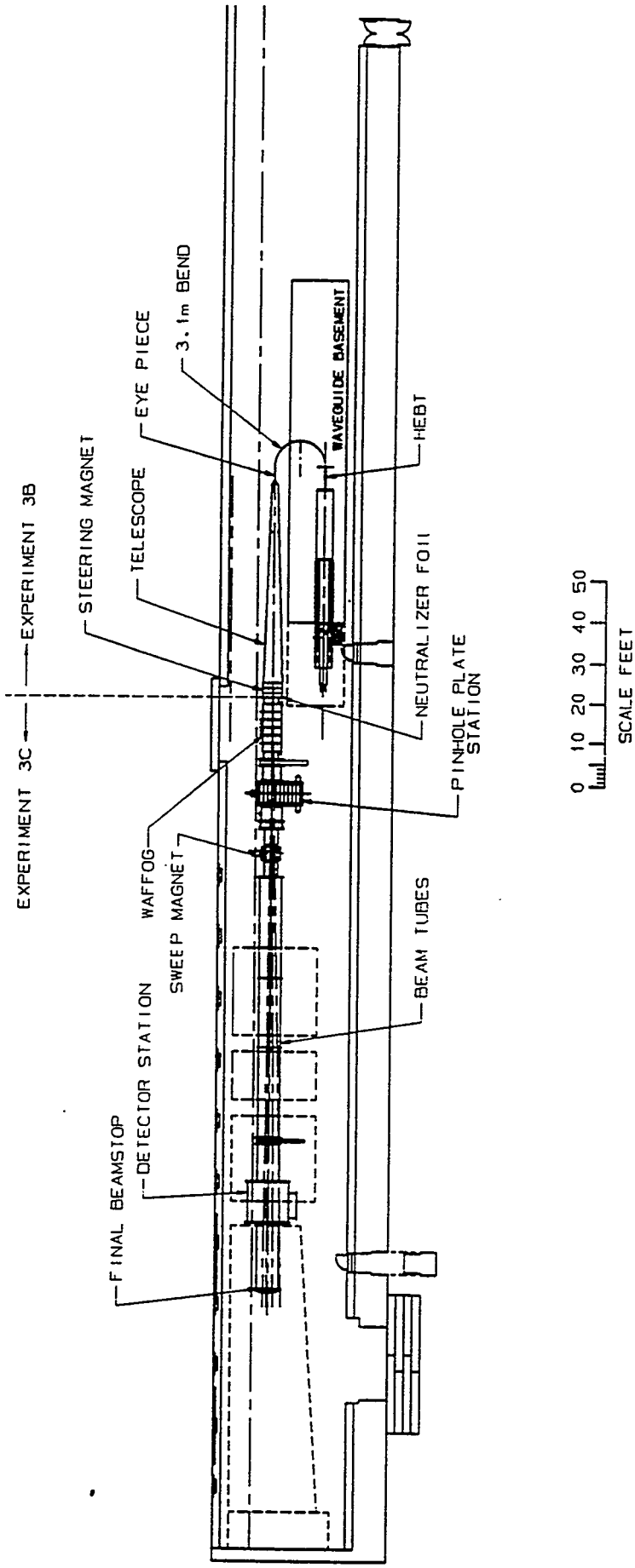

Fig. 5-6. Equipment layouts for experiments 3B and 3C.

GTA operations response to upset conditions are delineated in the SOPs for the subsystems, in the emergency plan (Appendix O), and in the accident analysis in Chapter 7.

GTA is a staged experiment, so there will be a steady stream of modifications that must be controlled and incorporated into the SOPs. Changes to the hardware are reviewed and approved before their implementation. Facility changes are reviewed by the building manager. The GTA quality assurance (QA) officer has the overall responsibility for change control.

5.3 Experimental Equipment

5.3.1 Accelerator Hazards

The hazards are minimal for the accelerator sector. Sections below describe the components of the accelerator system and commonly associated hazards. Safety issues of the injector include electrical high voltage, compressed gases, and radiation hazards. The safety issues of the RFQ/IMS/DTL involve the subsystems that feed into the vessel: e.g., the RF power, the vacuum lines, the cryogenic coolant lines, and the x-ray flux generated in the RFQ, IMS, and DTL by RF fields.

5.3.1.1 Injector Hazards - The major safety hazards that may be encountered in the operation of the injector complex are:

- electrical hazards from high voltage and the ion source;
- other electrical hazards;
- hazardous materials, e.g., cesium;
- toxic materials, e.g., chromate;
- compressed gases; and
- radiation hazards.

The two major electrical hazards in the injector are the 35-kV high-voltage power supply and regulator and the 600-V arc power supply and pulser used for the ion source. The 35-kV supply is driven by a raw high-voltage power supply of 60 kV at 15 mA that uses capacitors with 480 J of stored energy in the extractor circuits. The arc power supply might include a 600-V, 10-A supply with two storage capacitors that store 900 J each. Personnel operating the injector are protected from these two hazards by placing the supplies inside a high-voltage enclosure. The power to the supplies cannot be turned on unless all the enclosure doors are closed. In addition, the high-voltage enclosure is

interlocked so that when the enclosure door is opened, the power is removed from all equipment in the enclosure. All storage capacitors are discharged with a 10-sec constant to ensure that a lethal charge does not remain. Personnel protection systems, qualified personnel, and SOPs also mitigate these hazards.

Other electrical hazards include: the 208-V ac power for the 20-kVA isolation transformers that are inside the high-voltage installation; the 120-V ac power for the equipment in the equipment racks; and the 208-V ac power for the turbomolecular and roughing pumps. Safe wiring practices, such as running the wires in conduits, protect the operating personnel from these hazards.

Operating the ion source requires small amounts of cesium (≤0.1 g). The production of high-current H^- beams requires low-work function cathode surfaces that are provided continuously by the transport of cesium from the source plasma to these cathodes. Operation of the source without cesium reduces the beam current by two orders of magnitude and is unacceptable in this application. This cesium is introduced by a tube connected to an externally heated cesium oven containing a cesium chromate compound. The chromium content of the charge is considered toxic. The injector SOP addresses appropriate procedures for handling waste cesium compounds. After the ion source has operated, it produces cesium metal; therefore, appropriate cleaning procedures are required for the ion source. When cesium metal comes in contact with water, it forms a caustic cesium hydroxide with the evolution of hydrogen, which can ignite spontaneously. During servicing of the ion source, appropriate procedures, outlined in the injector SOP, are used to protect personnel.

Several compressed gases are used in this injector. They are hydrogen, argon, nitrogen, and helium. Hydrogen gas is used in the ion source to form the H^- beam; one permanently installed hydrogen cylinder (20 ft^3), with a standard hydrogen regulator equipped with a flash arrestor, is used to provide a small flow of a few sccm to the source. The accelerator tunnel is sufficiently large that even if the entire hydrogen cylinder were to be emptied into the tunnel, the resulting hydrogen/oxygen ratio would be well below the conservatively established 4% lower explosive limit (LEL) for an explosive hazard; therefore, this source of hydrogen should not constitute an unusual hazard. Argon gas is employed as a neutralizing gas in the LEBT and as a purging gas. Nitrogen gas is used in the arc region of the ion source; it is also employed as a general-purpose gas for cooling and as a back-up gas for pressurizing air systems. Finally, helium gas is used for leak

testing. All these gases are inert, but they could be asphyxiant hazards if used in small, unventilated areas that are accessible to operating personnel. This is not the case for the GTA injector, however, so these gases present no asphyxiant hazards. Standard procedures for storage and for regulator systems are employed. Oxygen monitors and alarms are maintained in the tunnel as a precaution during injector operations.

Two possible radiation hazards from operating this injector are x rays from the high-voltage regulator tube and from 35-keV electrons. The high-voltage regulator tube (4PR 250C) generates x-rays in the high-voltage system. The regulator tube, however, is enclosed in an oil tank and is shielded by the safety enclosure walls. Additional localized lead shielding is also employed and a scintillation x-ray monitor is mounted near the regulator tube during injector tests. The other x-ray hazard is from the 35-keV electrons that are accelerated along with the H^- beam in the injector. The beam pipes and magnets in the injector effectively shield this radiation and reduce it to a safe operating level. An x-ray monitor is used when personnel are in the beam tunnel.

Although an SOP for the injector is to be routinely used, there are nonstandard situations encountered in operating an accelerator system. "Out of the ordinary" testing and maintenance that deviate from the standard norm and from the established routine can sometimes result in unexpected and unforeseen hazards to personnel. The shift supervisor is responsible for determining whether a nonstandard operation is necessary; and, if so, the operations chief must call the appropriate HS personnel to assist in monitoring the nonstandard operation and complete a special work permit (SWP) that covers the nonstandard work.

5.3.1.2 RFQ/IMS Hazards - Hazards to personnel from RFQ/IMS operations include possible exposure to x rays during RF power checkout with no or low beam power at levels of 2A and to RF radiation leakage from flanges in coaxial or waveguide transport systems during checkout and operation at no or low beam power. When the system is operating at conditions above 3.2 MeV, no one is permitted in the tunnel and personnel are not exposed to these hazards.

An x-ray monitor is used when personnel are in the tunnel during no or low-beam-power checkout. Temporary barriers, warning signs and rotating beacons are used to exclude personnel from and to warn personnel of the sensitive areas. The use of SOPs by trained personnel will further mitigate x-ray hazards during no or low power checkout. HS personnel are on-site to monitor and determine access during all maintenance according

to the procedures established by the experience at the LAMPF accelerator: DOE Order 5480.11; the LANL Environment, Safety, and Health Manual AR 1-3, "SOPs and SWPs": and the GTA SOP. GTA disposes of any accelerator hardware according to the procedures in the LANL Environment, Safety, and Health Manual AR 10-2, AT Division SOP for Waste Management, "Low-Level Radioactive Solid Waste," or 10-6, "Excess Government Personal Property."

Potential exposure to RF power leakage during checkout is mitigated by assembly procedures which include the use of RF leakage sensors used to check for leakage during checkout. During operations, there is a slight overpressure in the RF coaxial cables or waveguides. Pressure sensors are employed to monitor this pressure. A leaky flange will result in a pressure drop which is noted by the sensor. The system will shut down when this occurs and repairs will be implemented.

5.3.1.3 DTL Hazards - Hazards to personnel from 850-MHz DTL operations include possible exposure to x rays during RF power checkout with no beam and to RF radiation leakage from flanges in the coaxial or waveguide power transport systems. When the DTL system is operating with beam, during Experiment 2D and beyond, no one is permitted in the accelerator tunnel. Therefore, risk of personnel exposure to these hazards is minimal. To mitigate the exposure to x rays from the DTL during no beam, lead shielding will be used to reduce x rays to acceptable levels. In addition to shielding, temporary barriers, warning signs, and rotating beacons will be employed to exclude people from and to warn people away from the sensitive areas. To control personnel exposure to x-rays from the DTL during no-beam operation, HS-1 will conduct routine radiation surveys. When dose rates exceed 10 mrem/hr, radiation worker permits (RWPs) and pocket chambers will be required. Use of SOPs and SWPs by trained personnel will further mitigate x-ray hazards during no beam checkout.

During 24-MeV operations, a beam spill can produce energetic neutrons that, in turn, would activate the structure, resulting in residual gamma radiation after the beam is off. The hazards can occur when maintenance or other hands on work needs to be done on the DTL, when the DTL has been exposed to a beam spill. The amount of radiation that personnel are exposed to depends on the length of time that the DTL is in service and the amount of beam spill to which the DTL is exposed. The fast-protect system will shut down the accelerator before any damage to equipment can occur due to a beam spill.

To prevent hazardous radiation exposure, HS personnel are on site to monitor and determine access during all maintenance according to the procedures and requirements established by the experience at the LAMPF accelerator and by DOE Order 5480.11; the

LANL Environment, Safety, and Health Manual AR 1-3, "Standard Operating Procedures and Special Work Permits"; AT Division SOP for Waste Management: and the GTA SOP. Disposal of DTL equipment is handled according to AR 10-2 or 10-6.

5.3.1.4 Activated Air - Activated air produced in the tunnel during 24-MeV operations will be extremely low. Air activation outside the tunnel is not expected to be measurable (see Appendix F). Activation levels of the tunnel air will be monitored during 24MeV operations. During these operations the tunnel air exchange rate will be reduced to 2.5 changes/hr. The tunnel air is exhausted through the stack to the atmosphere. The quick decay and small amounts of released activity pose no hazards to workers at the site. The calculated exposure levels to the public at the site boundary is 0.00004 mrem/yr, which is far below the EPA threshold requiring stack monitoring. Operating personnel will be protected against exposure to any activated air by a pressure differential that is maintained between the tunnel and its surroundings to ensure that air from the tunnel will not leak into adjacent work areas. (See Section 4.1.4). Since the GTA safety systems and procedures result in shut down of operations for credible accidents, such accident conditions will not increase the source term or the consequences to the public or workers from air activation.

5.3.1.5 Tunnel Radiation - Radiation generated in the tunnel results from the interaction of the proton beam with various components in the beam line: accelerator beam tailoring matching sections, 180° bend, telescope, and beam stops. The beam will be clipped by various edges in these components. The beam stops are intended to stop all or part of the final beam head-on.

Two radiation sources—prompt and delayed—are associated with the GTA beam line at 24 MeV.

Prompt sources are:

- neutrons produced by the beam slowing in the beam stop and experiencing neutrons yielding nuclear reactions – such as (p,n), (p,pn), (p,dn), (p,2n);
- γs produced in proton-induced reactions resulting from the de-excitation of excited product nuclides (not including bremsstrahlung protons produced by the atomic interactions of the protons slowing in the sea of electrons of the target, which is not covered here); and
- γs produced in reactions induced by neutrons produced above.

Delayed sources are:

- radioctive decay γs emitted by nuclides produced by the proton activation of the target; and

- radioactive decay γs emitted by nuclides produced by the neutron activation of all materials.

The prompt sources are a direct result of beam dumping on the beam stop and beam clipping on line components and are emitted following beam-on-target by a small fraction of a second; once the beam is off, these sources are no longer present. Delayed sources of γs are emitted by radionuclides still present within the target; the presence of these radionuclides is determined by prior irradiation and cooling histories, as well as the basic nuclear data associated with their production and decay.

Tunnel radiation is a hazard recognized and accounted for in the facility design. The facility was designed to operate at 100 MeV (see Section 4.1.3). Earth and concrete are used to reduce the radiation hazards to personnel outside the tunnel during 24-MeV production. At the 24-MeV level, no personnel are permitted in the tunnel during beam operation, and an RPSS is designed to ensure this.

Once the accelerator is shut off, the prompt reactions cease. Delayed reactions, however, continue for some time. Local shielding around various components, such as the beam stop, reduces the time necessary for personnel exclusion. The RPSS is designed to prevent access to the tunnel until measured residual activity is low enough to permit safe entry as determined by HS-1.

5.3.2 Output Optics

The optics operations and hazards are discussed in order of the HEBT, bend, telescope, and fast steerer subsystems. (See Section 4.2.2.)

5.3.2.1 HEBT

5.3.2.1.1 Experiment 3A Commissioning - During Experiment 3A, the tune-up beam stop will be installed and the modified 2D experimental diagnostics will be attached to the HEBT. (The HEBT, however, will not include the 425-MHz energy dejitter cavity.) Commissioning of the beam line will be done by moving the offset beam line to the end of the HEBT. The offset line will be modified by adding a LINDA plate to an extension of the line-supporting girder at its upstream end. Transverse LINDA will be used to determine the beam parameters. These parameters will be adjusted by varying the strength of quads Q3-Q6. The beam duty factor during these experiments is not expected to

exceed 0.05%. The operations and hazards of these experimental diagnostics are the same as in Experiment 2D and are discussed in Section 5.3.4.

The DTL will be set to the nominal parameters used in Experiment 2D. The offset line bend magnet and quadrupoles will be set to predetermined values based on 2D experience and beam-transport calculations. The beam will be tuned to the appropriate size and position on the intermediate beam stop by means of the HEBT quads and steerers using the offset line diagnostics. LINDA will be used to neutralize a fraction of the beam. This neutralized beam will not be deflected by the bend magnet and will be analyzed by the slit and collector.

The principal tuning activities are:

- measurement of the beam parameters using transverse LINDA; and
- adjustment of the beam parameters to the values required by the bend; this adjustment will primarily be accomplished by the four variable-field quads in the HEBT but may require tuning of the linac.

The hazards during commissioning are:

- Possible loss of vacuum from missteering the beam into the vacuum wall. The beam has sufficient heating power to melt through the wall if the wall is struck with full intensity for more than about 100 μs. This scenario would require failure of the fast-protect system (10 μs response time), which monitors both the beam position in the line diagnostics and the beam-line loss monitors. Such missteering could occur through error in steering the beam or failure of the offset line bend power. The bend-magnet current will be monitored by the run-permit system. Such a vacuum loss would impact the accelerator operations but would not result in a hazard to personnel, since personnel are excluded from the tunnel during beam operations.

- Exposure to secondary radiation from beam-line activation. During commissioning the line, some scraping of the beam will likely occur. In particular, the tune-up beam stop will be tested at low duty factor and the graphite stop will become activated. Radiation levels will be monitored by HS personnel and a time period will be allotted for radioactive decay before personnel are allowed to enter the tunnel. Remote area radiation monitors will not be used in the tunnel because the high radiation fields during beam operation could damage their electronics and cause erroneous or errant readings. The LANL interlock standard does not require remote area monitors for this reason. When HS personnel enter the tunnel, they will use telescoping monitors which allow up to 13 ft between the sensor and the radiation technician.

5.3.2.1.2 HEBT Operation - After commissioning, the offset beam line will be removed and the bend and telescope will be joined to the HEBT. Further adjustments of the HEBT quads will be inferred from the bend and telescope performance. The DTL will be tuned periodically by inserting the tune-up beam stop and adjusting the RF power to each tank. The RF is adjusted at a low duty factor of 100 μs macropulse length and 1 Hz repetition rate.

The likelihood of wall penetration by the beam will be less during routine operation than during commissioning. The beam should pass smoothly through the HEBT and, therefore, the line-activation rate will be low. The periodic DTL tune-up, however, will maintain a level of activation in the tuneup beam dump. Radiation levels will be monitored and a time period will be allotted for radioactive decay before personnel are allowed access to the equipment. Precautions to minimize exposure and proper disposal of radioactive material will be observed during any maintenance of the beam stop that requires handling or disassembly.

In addition to the hazards during commissioning, hazards during normal HEBT operation are

- RF leakage and x rays from the energy-dejitter cavity in the HEBT: The cavity will be shielded to protect personnel against x-ray emission. RF leakage could occur if seals on the coax connections fail or were improperly made. RF fields near the cavity will be monitored. RF fields will be monitored after maintenance and during startup and checkout with portable monitors. The limits for corrective action are 1.4 w/cm^2 for the RFQ and 2.8 w/cm^2 for the DTL

- Activation of the water used to cool and temperature regulate the RF cavity: The cooling system will consist of a small portable chiller module with self-contained coolant. Coolant activation will be monitored and waste coolant with measurable activation above background disposed of in accordance with LANL administrative requirements and AT Division SOP for Radioactive and Chemical Waste Managment.

5.3.2.2 Bend

5.3.2.2.1 Bend Commissioning - The offset beam line will be installed at the downstream end of the bend and a spectrometer will be added. The bend will be commissioned by moving the offset beam line to the end of the bend as shown in Fig. 5-7. A spectrometer will also be added to the LINDA slit and collector assembly for use with longitudinal LINDA to measure the bend-output longitudinal phase space. The spectrometer consists of two electromagnet quadrupoles, two electromagnetic sextupoles, and a 45° deflecting dipole. Transverse LINDA measurements are maintained. It is possible to use longitudinal LINDA for the bend output, because the beam-phase spread has increased considerably during passage through the bend. The beam is detected at the downstream end by a fluorescent screen viewed by a camera. Commissioning will be similar to the HEBT, but the longitudinal LINDA will be added. The unneutralized beam will pass to the offset beam-line dump. The small portion of the beam neutralized by LINDA will either be analyzed by the slit and collector (for transverse LINDA) or will be stripped by a thin foil and analyzed by the spectrometer (for longitudinal LINDA). The analyzed beam will strike the collector or a fluorescent screen. The radiation produced by the beam striking these elements will produce little direct radiation or activation. The elements and surrounding devices will be monitored and properly disposed when components are disassembled.

The bend will be commissioned by setting the HEBT quads to their nominal values and observing the beam emerging from the bend. The bend quads and dipoles are not adjustable, and the only transverse adjustment is done by steering the small electromagnets in the dipoles. The steerer settings are guided by the beam-position monitor readings. The steerers correct manufacturing-tolerance build up in the dipole fields and misalignments in magnet installation. Immediate transmission through the bend is expected because of the high quality of the magnets and the specified alignment tolerances. The energy acceptance of the bend is also high and normal fluctuations in the beam energy will not cause beam loss. The momentum compactor at the bend output will also be activated and the operational settings will be determined through the longitudinal LINDA measurements. The momentum compactor will be water cooled.

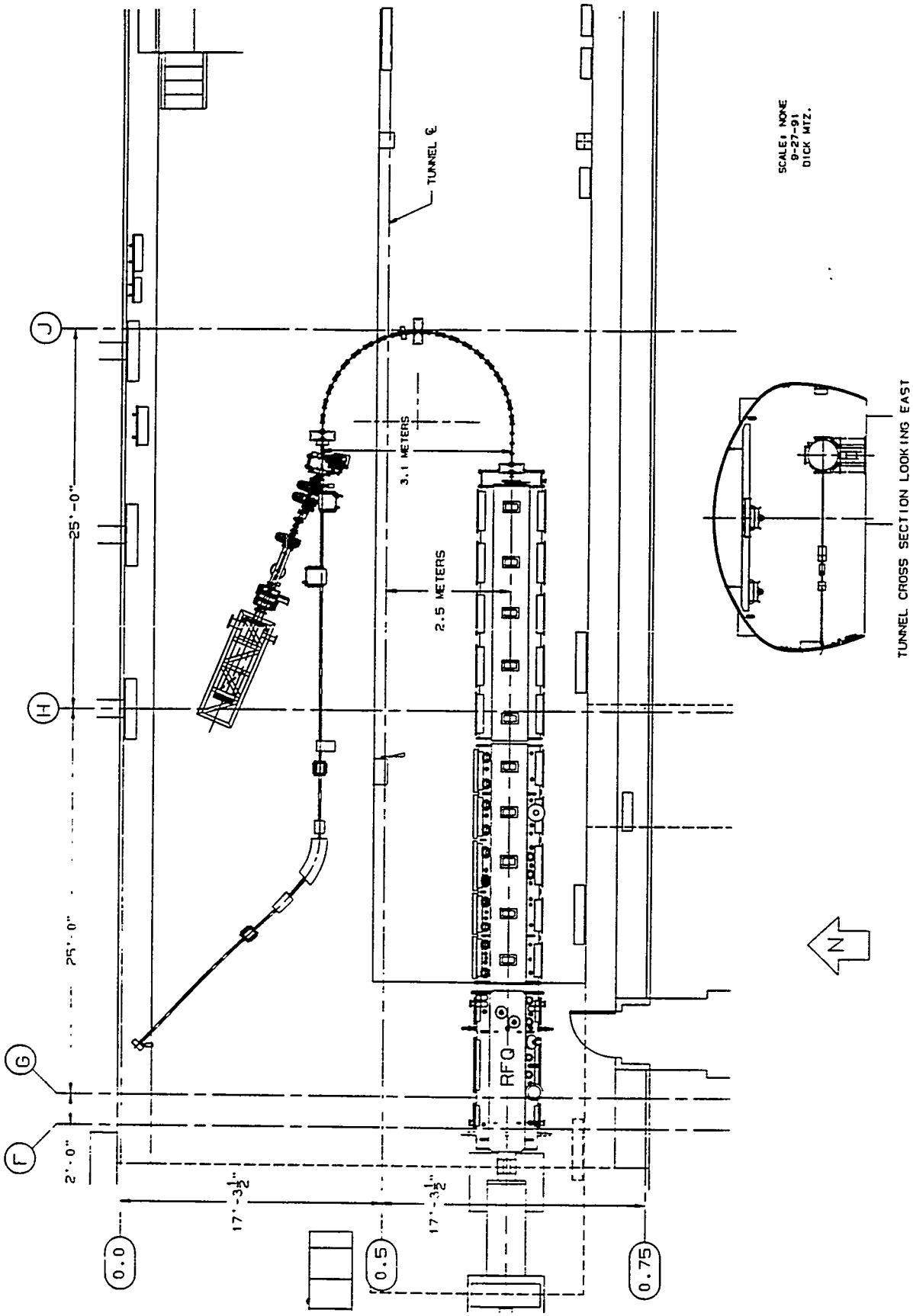

Fig. 5-7. Experiment 3B.

Bend commissioning hazards are:

- Vacuum loss by missteered beam melting through the vacuum envelope: If the beam should lose a significant fraction of its energy, (e.g., failure of a portion of the DTL RF system), the beam could intersect the vacuum envelope. A loss of RF power would, however, cause fast protect to drop and turn off the beam. As in the HEBT, the fast-protect system will act to prevent envelope puncture by turning off the beam when beam loss or position deviation becomes sufficiently large.

- Exposure to secondary radiation from beam-line activation: Beam-halo and errant-beam intersection with the vacuum envelope will activate the beam line. Some activation will occur from stripping of the beam by the residual gas in the bend vacuum. Personnel exposure will be minimized by cool-down periods before entering the tunnel. Activation will be monitored by HS personnel and exposure limits will be specified.

- Activation of the water used to cool and temperature regulate the momentum compactor RF cavities: The cooling system will consist of a small chiller module with self-contained coolant. Coolant activation will be monitored and waste coolant disposed of in accordance with LANL administrative requirements and AT Division SOP for Radioactive and Chemical Waste Management.

- RF leakage and x rays from the momentum compactor cavities: The cavities will be shielded to protect personnel against x-ray emission. RF leakage could occur if seals on the coax connections fail or were improperly made. RF leakage will be checked by HS-5 each time the RF is connected or disconnected from the compactor.

5.3.2.2.2 Bend Operation - After commissioning, the offset beam line and spectrometer will be removed. The bend will then transport beam to the telescope.

Routine operation of the bend will have the same types of hazards as commissioning. Commissioning, however, establishes operating parameters for the bend, thereby, reducing the severity of hazards during beam-line operation.

5.3.2.3 Telescope

5.3.2.3.1 Telescope Commissioning - The telescope will be commissioned in Experiment 3B. A drawing of Experiment 3B installation is shown in Fig. 5-8. During commissioning of the telescope and steerer, the WAFFOG chamber will be installed. Telescope commissioning will rely on the pinhole plate to adjust and determine the output-beam parameters. The telescope will receive the beam from the bend. The output beam tube, the pinhole system, and the final beam stop will be installed with the telescope. Using established settings for the bend and HEBT parameters, the eyepiece quads will be adjusted to provide the correct beam size on the harps in the expansion region. The output will be analyzed by the pinhole system and the telescope corrector magnets will be adjusted to provide a parallel focus and to correct geometric aberrations. The momentum-compactor system parameters will also be adjusted to minimize chromatic aberrations.

The hazards associated with telescope commissioning are:

- Exposure to secondary radiation from beamline activation: Beam-halo and errant-beam intersection with the vacuum envelope will activate the beam line. Some activation will occur from stripping of the beam by the residual gas in the telescope vacuum. Activation of the telescope collimator and the surrounding area will occur; this area will be shielded to minimize exposure of workers in the tunnel. Radiation levels will be monitored by HS personnel and a time period will be allotted for radioactive decay before personnel are allowed access to the tunnel. Components removed from the beam line during maintenance will be disposed of in accordance with LANL administrative requirements and AT Division SOP for Radioactive and Chemical Waste Management.

- Activation of the water used to cool the corrector magnets and to temperature regulate the objective lenses: The cooling system will

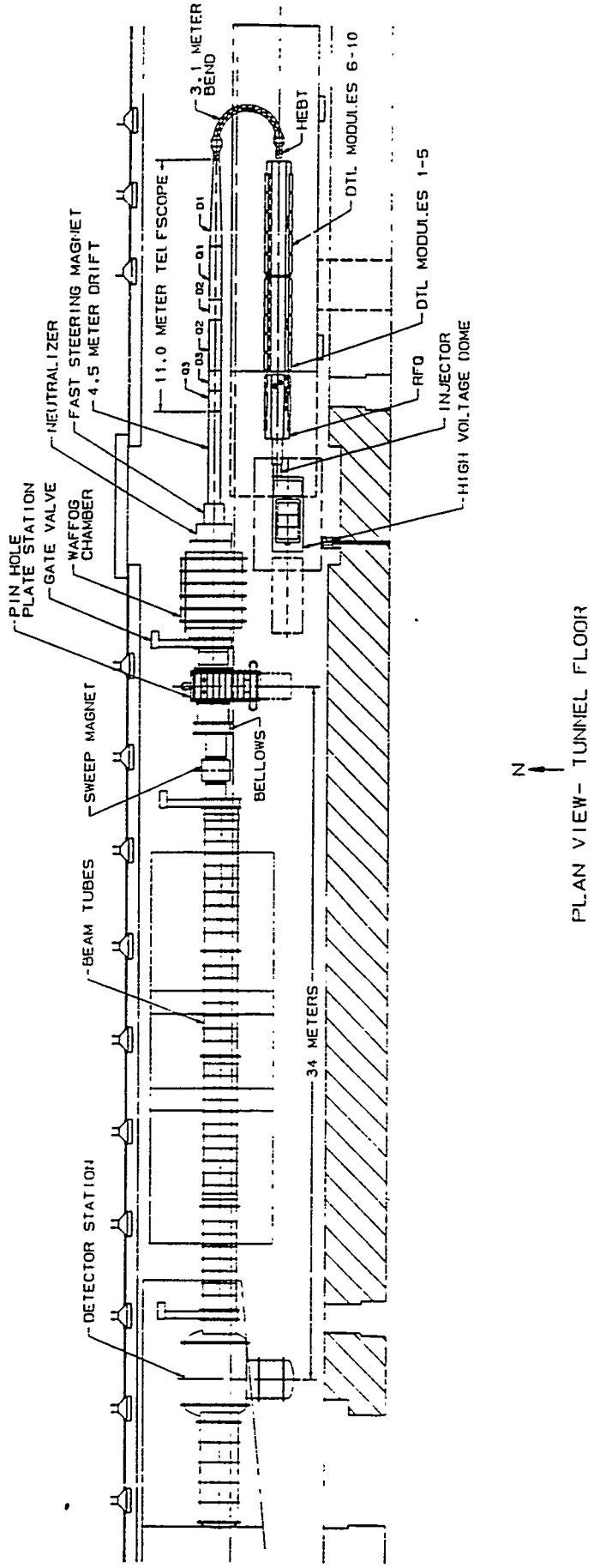

Fig. 5-8. Experiment 3B installation.

consist of small chiller modules with self-contained coolant. Coolant activation will be monitored and waste coolant disposed of in accordance with LANL administrative requirements and AT Division SOP for Radioactive and Chemical Waste Management.

- The corrector-power supplies operate at less than 10-V peak potential but are capable of providing up to 100 A of current. Inadvertant shorting across the magnet or supply terminals could result in sparking or heating of a metal object and consequent burns to personnel. Operating and lock-out, tag-out procedures will aid in preventing such occurences.

- Vacuum loss by missteered beam melting through the vacuum envelope: The beam is expanded in the telescope, so missteering will not result in vacuum-envelope penetration. The beam, however, is small in the eyepiece region, and the beam exiting the bend off-center could impinge on the vacuum envelope. The fast-protect system will act to prevent envelope puncture by turning off the beam when beam loss or position deviation becomes sufficiently large.

5.3.2.3.2 Telescope Operation - Routine operation of the telescope will have the same types of hazards as commissioning. Operating parameters will be established and the beam size will be stabilized, however, so the severity of hazards will be less than during commissioning.

5.3.2.4 Fast Steerer

5.3.2.4.1 Fast Steerer Commissioning - The fast steerer will be commissioned in Experiment 3B. It is shown in its position near the WAFFOG tank in Fig. 5-8. The same diagnostics as in the telescope commissioning will be used to commission the steerer. The fast steerer will be inserted between the telescope and WAFFOG chamber. The beam will be steered and the beam quality monitored by the pinholes. Steering rate and settling time will also be monitored. Fringe fields from the fast steerer magnet may require magnet shielding as determined by HS-1.

The hazards associated with fast steerer commissioning are:

- Exposure to secondary radiation from beam-line activation: The beam halo will be removed by the telescope collimator. However, misplacement of the beam and residual gas stripping will result in some activation of the steerer and the adjacent beam tube. Radiation levels will be monitored by HS personnel and a time period will be allotted for radioactive decay before personnel are allowed access to the tunnel. Components removed from the beamline during maintenance will be disposed of in accordance with LANL administrative requirements and AT Division SOP for Radioactive and Chemical Waste Management.

- Activation of the water used to cool the fast steerer: The cooling system will consist of a small chiller module with self-contained coolant. Coolant activation will be monitored and waste coolant disposed of appropriately.

- Electrical Hazards: The steerer power supply will operate at a maximum current of 400 A and a terminal potential of 90 V when producing a constant magnetic field. The reactive voltage at maximum slew provides an additional 45 V. Shock and burn hazards are present for personnel. Operating and lock-out, tag-out procedures will aid in preventing such occurences. The magnet terminals will be shielded and the shield interlocked to the magnet power supply.

- Interference Hazards: The fringe field from the fast steerer can change the input antroid parameters of the beam at the RFQ match point and result in unwanted steering at the output of the linac. The magnitude of this effect will be experimentally determined and appropriate shielding or feedback compensation will be provided.

5.3.2.4.2 Fast Steerer Operation - Routine operation has the same types of hazards as commissioning. Operating parameters will be established and the beam-size stabilized, however, so the severity of the hazards during operations will be reduced.

5.3.3 Neutral Beam Hazards

During the experiments that characterize the telescope and the steerer (Experiment 3B), the following operational concerns will be addressed. The characterization beam stop in the pinhole plate station must be protected against over heating. Access to the characterization beam stop, and it's surroundings, must be done in accordance with an approved SWP and HS-5 guidance. Personnel entry into the confined spaces within vacuum vessels must be controlled. Possible leaks from the LN_2 cooling system in the detector station must also be considered. (See Fig. 4-30.)

5.3.3.1 Beam Heating - The GTA beam has a relatively low energy so it is possible to stop it in a layer of graphite 5 to 6 mm thick. At the reduced beam pulse repetition rate of 0.1 Hz pulse frequency the average power level is quite moderate (~240 W), and it is feasible to dissipate the beam-induced heating of the graphite, chiefly by thermal radiation. Some of the heat will flow to the aluminum backing plate, which is water cooled, and some will radiate to the walls. The pinhole plates will be shielded from excessive temperature by the cooled characterization beam stop. (See Fig. 4-31.) Interlocks will be provided in run permit to prevent any increases in pulse repetition rate or in average beam power. There are two considerations: to avoid thermal dissipations in excess of the beam stop's design; and to avoid excessive generation of direct and indirect ionizing radiation in the vicinity of the characterization beam stop. Only the second of these considerations involves hazard to personnel.

5.3.3.2 Direct and Indirect Ionizing Radiation Consideration - Direct and indirect ionizing radiation is induced into the graphite both by the beam and by neutron induced reactions in the surrounding materials. Graphite was chosen for this beam stop because of its low cross section for neutron production during beam operation. When the beam is on, neutrons and gamma rays are emitted directly from the graphite by proton-induced reactions. Radioactive nuclei are also created in the graphite. This increases the emission of gamma and beta rays; the half life for these processes is 20 min or shorter. Further, some of the emitted neutrons are captured in materials in, or near, the stop enclosure, and these materials will become radioactive. When the beam is turned off, the source of activation ceases, leaving a background composed chiefly of gamma rays produced by induced radioactivity decay. This presents a potential hazard to any person who enters the beam channel near the characterization beam stop.

The radiation hazard from the characterization beam stop appears to be small. Los Alamos National Laboratory group T-2 has made extensive calculations on this general

subject for conditions, which are similar to those expected at GTA. Their analysis provides an estimate of the radiation produced from induced radioactivity created in, or near, the characterization beam stop. (See memorandum by W. B. Wilson and R. J. LaBauve of T-2 [T2-M-1967; Feb. 16, 1988] in Appendix F). Table 4 of the memo provides radiation-dose rates at a distance of 2 m from the stop as function of cooling time and irradiation history from several different beam stop materials.

The neutral beam sector used the carbon target data given by Group T-2, and therefore chose the radiation period to be 1 wk of 4 days with 4 hr per day irradiation at the full beam of 1 mA, average. For use as estimates of characterization beam stop operation, the T-2 dose rates must be scaled down by a factor of 100 to account for the reduced duty factor. Figure 5-9 shows the T-2 values of radiation dose, in units of mrem/hr, as a function of cooling time, in hours, after the end of the irradiation period (at 2 m from the stop). At 1-hr cooling time, the radiation dose is about 14 mrem/hr and is dropping rapidly; at 2 hr the dose rate is 1.3 mrem/hr. It is assumed that a region 2 m distant from the stop would be an exclusion space. If maintenance is required directly on the stop or its internal parts, a longer cooling time would be required with more careful control. Safe personnel access will be determined by HS-1, however, based on data taken in the vicinity of the characterization beam stop. The acceptable radiation dose for maintenance work is based on ALARA principles. The work will be evaluated by HS-1 and special controls such as time limits will be prescribed by a radiation work permit. There is no single radiation level that defines an "acceptable radiation field." However, most maintenance work is expected to be in fields well below 5 mrem/hr.

5.3.3.3 Nitrogen Release into the Vacuum - Another operational concern is the LN_2 cooling system (Fig. 5-10) for the cameras in the detector station vacuum vessel. If the cooling system ruptures, pressure within the vessel could rapidly increase. The increase, however, is only a fraction of an atmosphere due to the large expansion volume provided by the neutral beam vacuum vessels. A pressure relief valve therefore, is not necessary on the vessels to vent excess pressure and an external hazard is not possible.

5.3.3.4 WAFFOG - Wire and fluorescent fiber offset grid (WAFFOG), the beam-direction sensing techniques for GTA, uses an array of wires upstream that scatter beam particles leaving a shadow of depleted beam. This shadow is detected 1 m downstream by a fluorescent ribbon, which is viewed from the side by a camera. Data analysis calculates the beam direction from the shadow position on the fluorescent ribbon. The beam direction is measured at five different points in the beam cross section, at each point one camera measures the x-direction and one camera measures the y-direction. The entire apparatus is in a large vacuum chamber, which is part of the beam line.

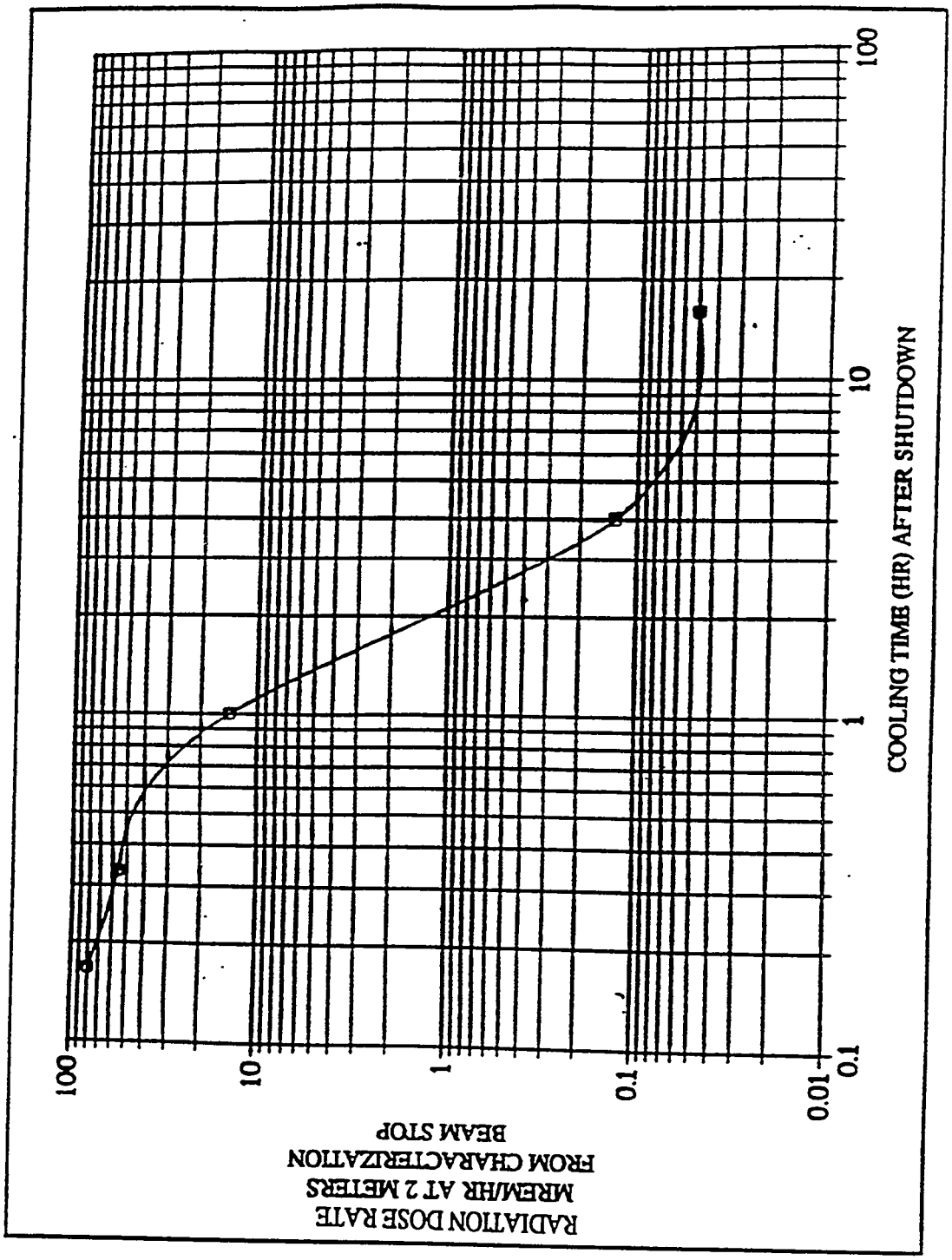

Fig. 5-9. Radiation dose rate vs. cooling time.

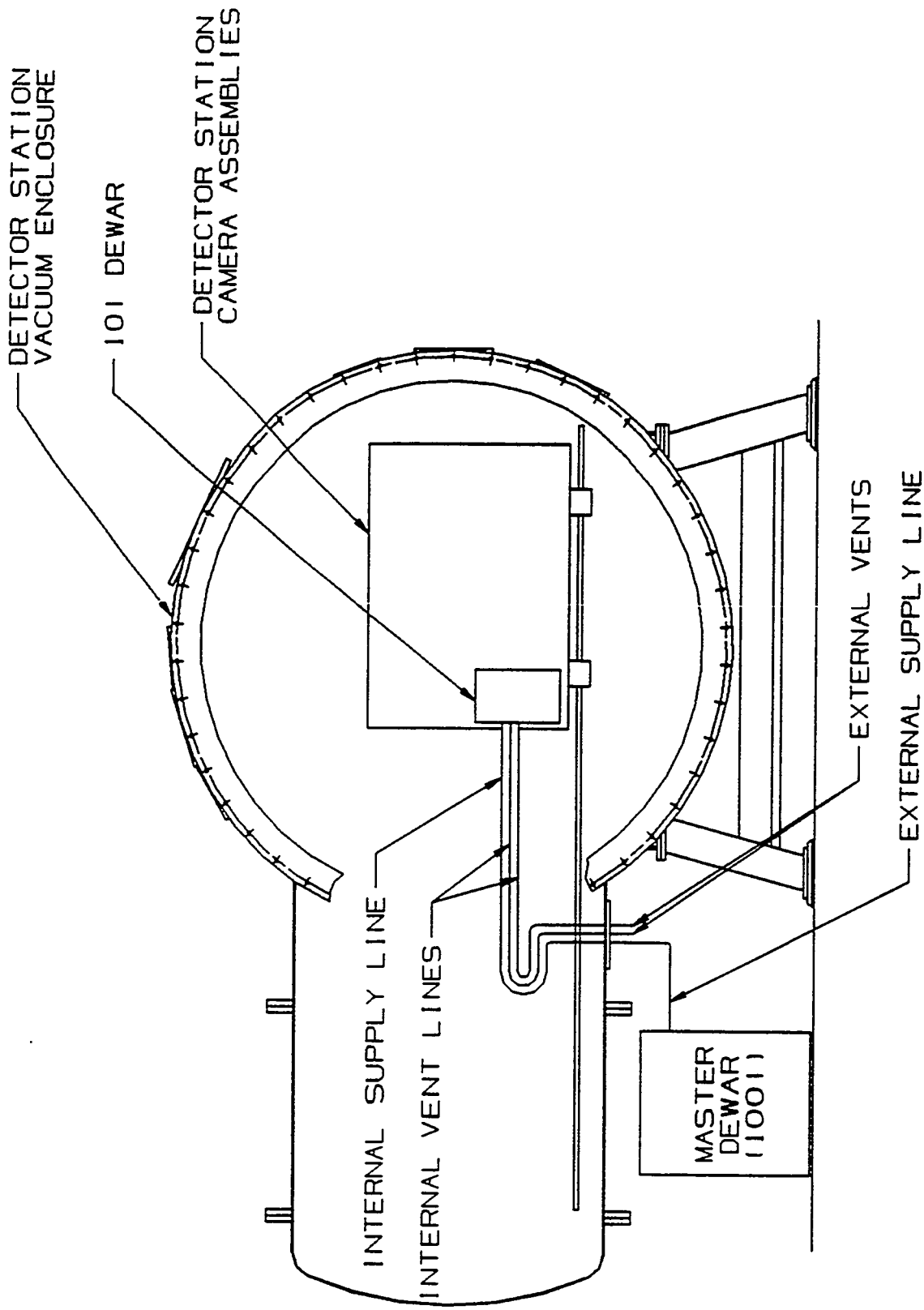

Fig. 5-10. Neutral Beam LN_2 cooling system.

The main safety concern is activation of the WAFFOG components that are exposed to the beam. The wires are 0.001 in. diameter tungsten, the ribbons are 1/8 in. by 0.001 in. tungsten coated with 0.001-in.-thick Gd O_2S doped with 1% terbium or praseodymium. The gadolinium oxysulfide coating uses a binder of SiO_2 produced by a sol-gel process. Because of the thinness of the materials exposed to the direct beam, only a few grams of material are involved. After exposure to the beam, these materials will be activated and must be treated as radioactive waste. Any operations which will involve exposure to these materials (i.e., with the vacuum chamber open) will require the presence of a health physics monitor and an SWP. The same precaution will always be taken with the other WAFFOG components, which are inside the vacuum but not exposed directly to beam. These are mainly components of the frame work which is approximately 100 kg of graphite-epoxy composite. This is low Z material, which is not expected to have long-lived activation products. To prevent degradation of the epoxy by the beam wings, a graphite skimmer will be placed just upstream of the WAFFOG framework. No more than the wings of the distribution beyond $2\cdot\sigma$ will be intercepted.

5.3.4 Experimental Diagnostics Hazards

Diagnostics hazards include diagnostic lasers, magnet power supplies, energized magnets, magnetic fields, high-voltage power supplies for electron suppression, and the beam-stop.

Diagnostic lasers pose two possible hazards: electrical shock and ocular damage from over exposure to the optical radiation they produce. Safety features of the lasers are described in Section 4.2.4.2.4. Laser dyes and solvents are addressed in Section 5.5.3.

Both diagnostic lasers contain high-voltage (2 kV), high-current capacitor banks, and other high-voltage components, which are potential hazards. The lasers are sold as a unit, and high-voltage safety interlocks are provided by the manufacturer. Removal of any of the four access panels or the laser head plug from either laser opens a security circuit that switches off main power to the laser and grounds capacitor banks. The lasers are considered safe under normal operating conditions. They are also considered safe during nonstandard operating conditions (for example, maintenance) provided all the interlocks are functional. Qualified personnel who conduct any maintenance done on the high-voltage components will follow the guidelines outlined in the manufacturer's operating manual and the laser SOP. Laser personnel are trained in laser safety in accordance with LANL requirement. The LINDA SOP and the laser set up have been reviewed by a LANL laser safety officer. There is no danger to personnel not working directly with the laser.

All laser beams are enclosed in beam tubes, thereby mitigating any ocular hazard. Section 4.2.4.2 provides further detail on the laser-beam diagnostic system.

A variety of magnet power supplies will be used for the Experiment 2D diagnostic beam line. There will be 4 power supplies capable of approximately 50 V and 300 A output and several supplies capable of not more than 20 V and 50 A. These hazards are not voltage hazards, but they are "high-current" hazards. Regardless of output levels, all power supplies will be wired to large flashing lights that indicate when the main power-switch power is energized. Unshielded wires, lugs, bus bars, etc., wherever possible will be covered. Chassis of power supplies will be grounded to prevent energizing isolated, easily touched components.

Magnets that are energized will have the same electrical shock hazard as the supplies that power them. In may also be possible for magnets, or portions of magnets, to become warm or hot to the touch. This will not be possible if all interlocks are properly functioning; however, if an interlock fails and magnet cooling is insufficient, parts of the magnet may exceed 100°C. Such a combination of events is extremely unlikely but could result in an additional hazard in a ruptured coolant passage and rapid release of hot water or even steam.

Magnet fields in excess of 10 G present possible hazards to people wearing prosthesis such as heart pace-makers. The maximum allowable field that is not posted with warnings is 10 G, and it is expected that at least 1 magnet—the 22.5° bending magnet—will exceed this level more than 1 ft from the magnet. A warning sign will be posted stating this information. No magnet in the diagnostic beam-line will present hazardous magnetic fields to an individual not wearing a prosthesis.

Energized magnetic fields also can produce a magnetizing force that can pull iron or steel devices toward it. This rarely presents a severe hazard, however, if personnel use a large iron or steel tool near an energized magnet their fingers may be pinched. The SOP for Experiment 2D diagnostics will warn personnel against doing this.

At least one high voltage (>1,000 V) power supply will be used to suppress back streaming electrons in the intermediate beam line beam stop. This may present a shock hazard, however, it is unlikely to present a severe health hazard since the maximum current will be 100 μA. This power supply will be locked out during maintenance.

GTA operations will produce heat and radioactivity at the beam stop. The hazards associated with the heat being generated are only "potential" hazards that would occur in extraordinary circumstances. Temperatures would exceed nominal ranges only in the event that proper cooling air flow is not supplied and both thermal and flow interlocks fail. Such failure of redundant systems is extremely unlikely.

Radiation hazards will be controlled by shielding, access control, training and use of radiation work permits (RWP) for maintenance. Precautions to avoid excessive exposure or contamination will be outlined in the SOP for tunnel access. This will include such activities as assuring the intermediate beam stop is in place, and the proper radiation monitoring instrumentation is used during such activities.

5.4 Accelerator Support Systems

5.4.1 Accelerator Controls

The GTA control system is designed to simplify the remote operation of the accelerator. Operator interface (OPI) displays use mimic diagrams, point-and-click selection and adjustment for control actions, multiple display windows, and highlighted graphics for status and exceptions. Very little training is required to use the OPI displays, which allows operators to concentrate on the control and data acquisition processes. Operator overload is also normally kept low by condensing low-level fault information. In addition, operator errors are minimized, because the control system checks each operation under the current control mode. Whenever possible, the control system provides independent verification when a requested control command is completed and, in some cases multiple independent checks are performed. In some applications, for example, if the operator commands a valve to open, the control system will verify the operation by checking a limit switch on the valve and the flow or pressure after the valve. If the control system detects fault or abnormal condition, an alarm is raised on the display, and the operator can quickly determine the exception's cause by bringing up an additional display window. Furthermore, all derived data required for on-line analysis is calculated and displayed immediately.

Eventually, as experience is gained, the manual operator controls of GTA will be taken over by automatic control sequences. For example, recent experiments on the discharge test stand (DTS) have demonstrated the feasibility of automating the control of the arc source in the injector to allow long-term, stable operation without operator intervention. When implemented on GTA, this automatic control algorithm will allow operators to concentrate on testing and commissioning the remainder of the accelerator components. Many of the low-level control sequences have already

been implemented. One example of this is calibration and operation of the emittance scan diagnostic, which now requires only simple OPI display selections by the operator.

Although personnel safety systems and many equipment protection systems are implemented in hardware, the control system is cognizant of the systems' status. This cognizance guides the operators in their control actions and continually informs automatic control programs.

5.4.2 RF Power (Hazards)

5.4.2.1 Electric Shock - Potentially lethal sources of high voltage can be found in the klystron and tetrode amplifier systems of both GTA and the HPCTB. For the klystron system, potentially lethal voltage can be found in several locations: the screen rooms of the large and small capacitor banks, the two 100-kVdc power supplies, the klystron modulator tanks, and in the cabling that connects these subsystems. Similarly, lethal potentials can be found in the tetrode amplifier system: in the circuits associated with the tetrode screen power supply and plate power supply, and the triode plate power supply.

5.4.2.1.1 Klystron System - Personnel safety for the GTA and HPCTB klystron systems is primarily accomplished through a series of redundant interlocks. The personnel safety interlock chain is hard-wired; the equipment interlock chain is software-based. An interruption in either chain will cause the high-voltage power supplies (HVPS) to be shut off. (See Fig. 5-11) The two HVPS for the klystron system are located on a pad outside Building MPF-365. A single triaxial cable running through a conduit brings the high voltage from each power supply to the capacitor-bank screen rooms One HVPS powers the small capacitor bank; the second powers the large capacitor bank. Entrance to these screen rooms is controlled by a Kirk-key system, which is part of the operational interlock system. When the key is removed, high voltage power is shut down. Furthermore, when the door to a capacitor room is unlocked, the capacitors are automatically grounded by three different short circuits, thus assuring that no high voltage will be present in the capacitors. As a final assurance, personnel will not enter the capacitor room until a system voltmeter reads zero. Grounding hooks are provided in the capacitor room as a backup safety precaution. The grounding hook is latched in place with a microswtich which is part of the hard-wire interlock chain.

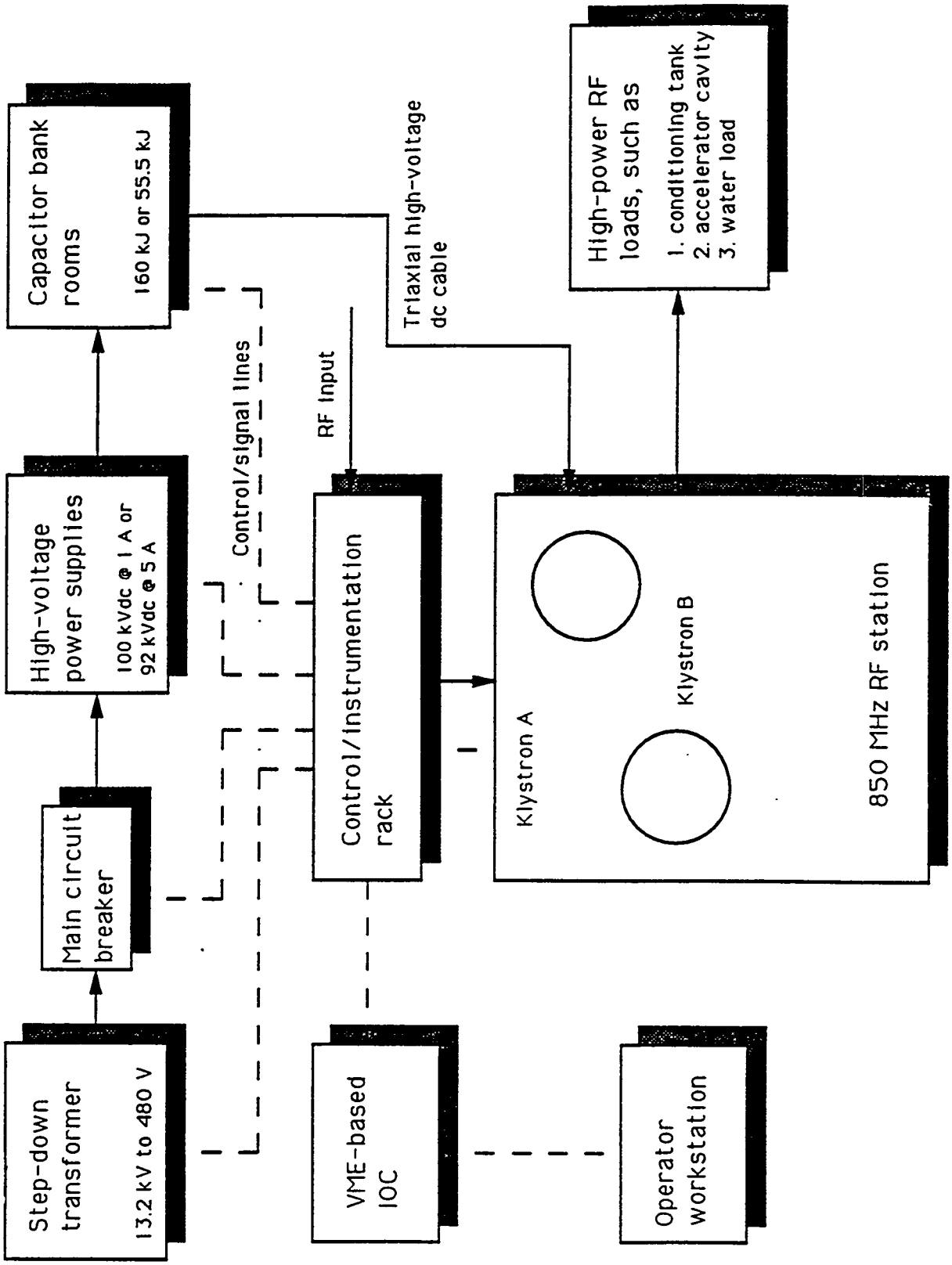

Fig. 5-11. Block diagram of klystron modulator safety interlock system.

Personnel are protected from the high voltage present in the RF station by the modulator tank and the insulating oil it contains. Any attempt to open the modulator lid during operation will trip an interlock and shut off all high voltage. High voltage is also present in the RF station control rack. Here, the two controllers/power supplies for the vacuum pumps have exposed terminals where high voltage may be present. These terminals are clearly marked "Danger High Voltage." Intermediate voltage is also present in the racks. Under normal operations these racks will be closed. If maintenance procedures call for operating the racks with the doors open, then two qualified personnel must be present and neither can leave the rack area while the doors remain open.

5.4.2.1.2 Tetrode System - Personnel safety for the tetrode systems is primarily accomplished through a series of interlocks. (See Fig. 5-12.) Capacitor banks receive high voltage from the high-voltage tetrode screen supply and the triode-plate supply over shielded cables. The capacitors are in shielded containers on the floor of the cabinet and are labeled "Danger High Voltage." The capacitors are connected to the triode and tetrode by means of a high-power resistor board. Capacitor oil is contained within National Electrical Manufacturers Association (NEMA) enclosures and does not present a fire hazard in these circuits. Discharge relays on the resistor board fire if the cabinet interlocks are opened. When the interlocks are opened, the relays are de-energized. In addition, a grounding rod is provided as a safety precaution and is used on all capacitors before any maintenance is performed. Bleed resistors shunt all capacitors and discharge the capacitors within 30 sec after the high voltage has been removed. Voltmeters are permanently installed in the system to check capacitor voltage.

High voltage is supplied to the tetrode plate from a power supply in an external cabinet. The connection to the tetrode cabinet is made within a grounded box labeled "Danger High Voltage." The connection to the tube is made within the pressurized cavity and is inaccessible without disassembling the cavity. The power supply contains a crowbar circuit and an emergency-off button.

5.4.2.2 Oil Spill - Each modulator tank on the mezzanine floor is filled with approximately 200 gal. of Envirotemp 200 Fluid, a nonhazardous, nontoxic polyol-ester-based

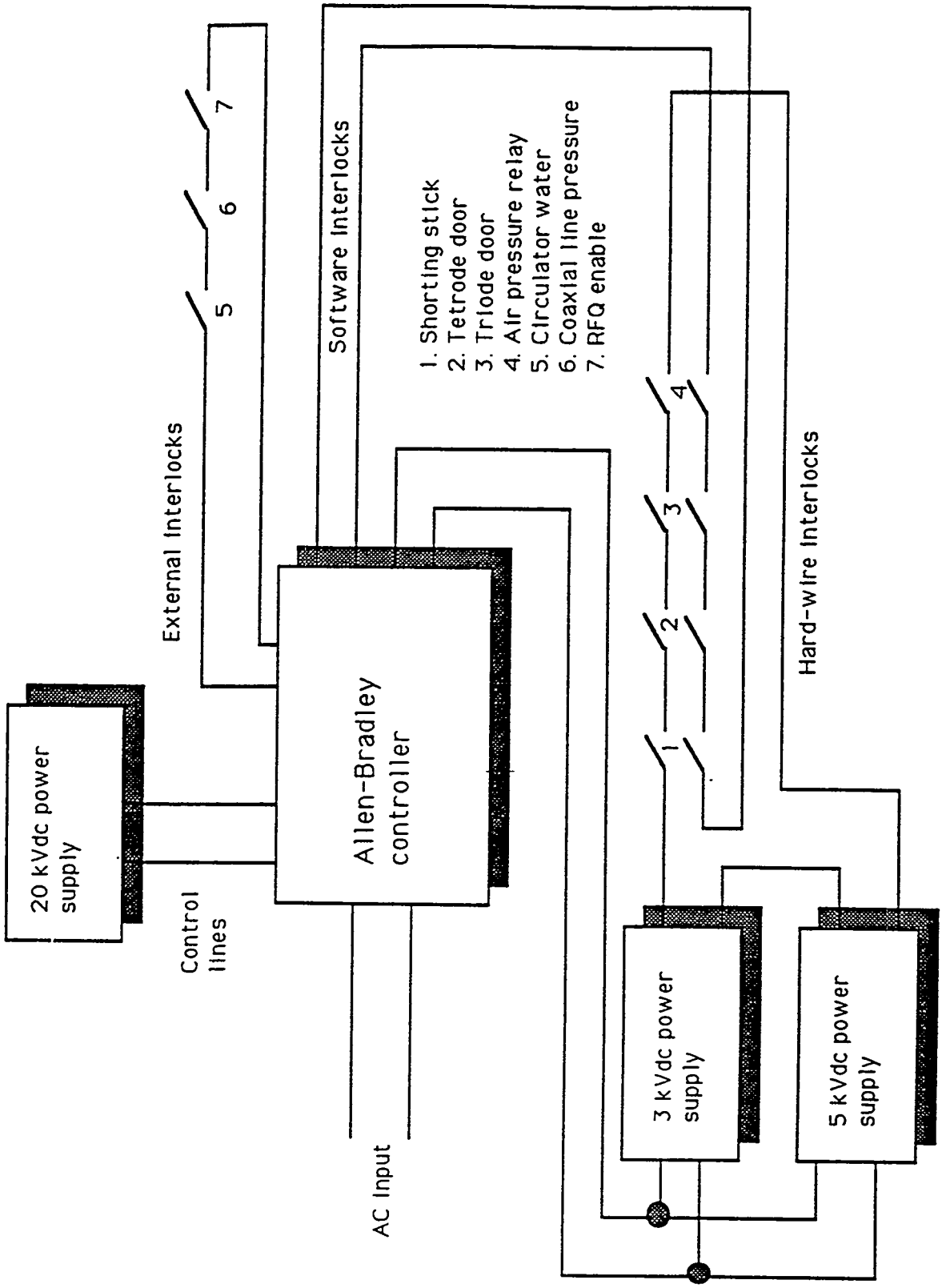

Fig. 5-12. Block diagram of tetrode safety interlock system.

dielectric fluid with a flash/fire point of 270-306°C. The oil is contained in rugged sturdy tanks that would be difficult to puncture. Small spills will be dealt with using spill clean-up kits located on the mezzanine floor. In the unlikely event that a tank is ruptured and all its oil is spilled onto the mezzanine floor, the fact that only 200 gal. could escape limits the possible seriousness of the spill. Again, clean-up kits would be used to control the spill and effect a clean-up. Furthermore, the mezzanine floor has been designed as a "sunken" floor, so that any spilled oil would be confined to the mezzanine area. Even if all modulator tanks were ruptured simultaneously, the floor design would contain the spill. To protect equipment, interlocks have been installed that will shut down klystron operation if an oil-level sensor detects a low-oil condition.

5.4.2.3 High Bay RF Amplifier Radiation - During operations and RF testing, x rays are produced in the RF klystrons and in the high-voltage tubes. This is caused by energetic electrons in the tubes striking tube components. The x rays are attenuated, where necessary, by localized lead shielding. This type of shielding is a standard procedure used in RF installations.

Microwave radiation is also present in the waveguides leading from the klystron amplifiers to the loads and in the coaxial transmission lines leading from the tetrode amplifiers to the loads. Waveguide joints can leak RF electromagnetic radiation. Portable RF detectors are used to monitor leakage. During operations, permanent RF detectors are appropriately located to monitor potential leakage. RF leaks are to be kept below frequency-dependent exposure limits of the 1990 American National Standards Institute (ANSI) microwave/RF standard (ANSI C95.1). Appendix J contains further information on the requirements of this standard as applied to GTA.

Waveguide and coaxial line integrity is monitored by yet another system. Both the waveguide and coaxial transmission line are slightly pressurized with air. Sensors detecting the absence of such air pressure will trip an operation interlock.

In the event that it is necessary to disassemble a waveguide or coaxial line for maintenance or modification, RF operations will not be allowed to begin again until personnel from HS-5 are present to measure any microwave energy that might leak from the transmission lines. This procedure is described in SOPs in Conduct of Operations: 425-MHz Tetrode Amplifier and Conduct of Operation: 850-MHz Klystron Amplifier.

5.4.3 Accelerator Vacuum Hazard

A hazard associated with the accelerator vacuum system and vacuum vessels (see Figs. 4-21 through 4-24) is the rupture of a high-pressure (20 atm) cryogenic-cooling line inside the vacuum vessels, resulting in the pressurization of the vessel itself. This hazard could result in an over pressure of the vacuum vessel. To relieve the over pressure, the vacuum vessels have redundant pressure-relief valves that actuate between 3 and 5 psig and vent the cold gas into the vacuum exhaust line. Sensors in the cryogenic system automatically close the supply and return valves, and minimizes the amount of cold gas expanding into the vacuum vessel. To protect the vacuum pumps from damage, all pump isolation valves automatically close when the vacuum vessel pressure exceeds 5×10^{-5} torr during beam operations. The HPCTB and vessel is protected with relief valves in the same manner.

To prevent a catastrophic failure of a vacuum vessel, each vessel has been designed in compliance with Section 8 of the American Society of Mechanical Engineers (ASME) Pressure Vessel Code and receives a positive pressure test of 6 psig, which is two times the 3 psig primary relief-valve rating.

The cold gas vent is located high enough so that exposure of personnel to cryogenic helium is minimized.

5.4.4 Potentially Contaminated Water-cooling System

All water cooling of accelerator equipment that has the potential for activating the cooling water will be accomplished using portable water chillers. The small portable self-contained water chillers will be used in the beam tunnel to cool beam line optics components and beam stop equipment. (See Fig. 4-46.) These are water air chillers, so there is no possibility of potentially contaminated water leaving the tunnel area. The water in these closed loop systems will be classified and treated as potentially contaminated. Appropriate measures are taken to ensure that contaminated water is isolated from the main-facility water, and all contaminated water is monitored and disposed of properly by EM Division. These measures will be taken in order to assure that water which may be slightly contaminated does not escape to the environment.

5.4.5 CCS

5.4.5.1 40-kW CCS Operation - The design of the CCS permits heating and cooling in a controlled fashion to minimize the effects of thermal stresses on the GTA structure. In

the normal mode of operation for the CCS, LH_2 provides the necessary refrigeration for the system to operate at about 22 K. To begin this operation, LH_2 is transferred from an LH_2 storage dewar to an LH_2 run dewar. Valve configurations, specified from the control console, permit the transfer of LH_2 between the storage and the run dewar. The run dewar contains two heat exchangers that provide heat transfer between the circulating GHe and LH_2. The hydrogen boiloff resulting from the heat-exchange process is vented from the dewar to a flare stack.

In the initial cool down of the system to temperatures ~80 K, LN_2 provides the refrigeration for the CCS. Similar to the LH_2 run dewar, an LN_2 run dewar containing a single heat exchanger is installed in the system. The GHe in the circulating system flows through the heat exchanger coil in the LN_2 run dewar until the GTA components are cooled to the proper temperature. The appropriate liquid level in the LN_2 run dewar is maintained by transferring LN_2 from the LN_2 storage dewar as needed. In this phase of cool down, the LH_2 run dewar is bypassed. The GN_2 produced as a result of this heat exchange is vented to the atmosphere. When the GTA is sufficiently cooled by the LN_2, the GHe circulation is switched to the LH_2 run dewar to complete the cool down process.

The common modes of operation of the CCS include (in their normal sequence):

- pressurization with GHe;
- purification of system;
- LH_2 system purge and fill;
- cool down and standby at 80 K;
- cool down and standby at 22 K;
- GTA run (for example, RF power and/or beam on);
- warm-up; and
- depressurization.

SOPs cover all these operations.

5.4.5.1.1 Pressurization with GHe - Before pressurizing the system with GHe, the vacuum pump will be used to clean the circulation lines and other system components of impurities, such as air, that might have entered the system. Then, GHe is transferred from the GHe recovery vessel to the GHe circulation lines and other system components, such as the heat exchangers. This transfer is accomplished initially by allowing the pressure in the two systems to equilibrate. Then, the GHe recovery compressor is used to transfer GHe from the recovery

vessel to the GHe circulation lines until the desired pressure of about 22 atm or 318 psi is achieved in the lines.

5.4.5.1.2 Purification - After the system is pressurized with GHe, the GHe may be circulated through the system purifier and the CCS components, as appropriate, to remove any impurities that remain. Samples of the GHe can be removed and analyzed for contamination. The circulation and purification process will continue until the contamination level is reduced to an acceptable value (less than 10 ppm by volume) on two or more samples.

Air and water vapors are the most likely impurities to occur in the GHe. If these impurities enter the system with the GHe, they will be removed during the purification mode of operation. As the system is cooled down to operating temperature, any of these impurities remaining in the GHe will freeze, probably on the surface of the heat exchangers in the LN_2 and LH_2 run dewars. This could increase the pressure drop and decrease the effectiveness of the heat exchangers. If pieces of the frozen particles break loose from the surface of the heat exchanger, the pieces could accumulate in valves, orifices, or cooling passages in the accelerator, increasing the pressure drop through these components. The circulating compressor would have to overcome the increased pressure drop in the system or flow through the system would decrease. Upon warm-up of the system, the frozen air or water will melt and vaporize (especially the air) and mix with the GHe in the system. These impurities in the GHe could, therefore, affect operation of the CCS but should not constitute a safety problem.

5.4.5.1.3 Cool Down and Standby at 80 K - After the system is free of impurities, GHe circulation will be switched from the purifier to the GHe/LN_2 heat exchanger in the LN_2 run dewar. LN_2 can then be transferred from the storage dewar to the run dewar, and the cool down of the system will begin. The cool down rate will be controlled to ensure that the GTA components are not overstressed during the cool down process. Using LN_2 for the cool down from room temperature to ~80 K minimizes the use of LH_2. Cool down from room temperature to ~80 K should be accomplished in about 8 hr. The system can then be maintained in this standby condition until about 1 hr before the accelerator is to be operated. During cool down, GHe will be transferred from the recovery vessel to the system to maintain it at the appropriate operating pressure

by using the recovery compressor. During cool down and standby, it will be necessary to transfer LN_2 intermittently, under manual control from the storage dewar to the run dewar, to maintain the appropriate liquid level in the run dewar.

5.4.5.1.4 Cool Down and Standby at 22 K - Before the accelerator operation, LH_2 will be transferred from the LH_2 storage dewar to the LH_2 run dewar. Then, the circulation of GHe will be switched from the LN_2 run dewar to the LH_2 run dewar, and the system will be cooled from ~80 K to ~22 K. During cool down, GHe will be transferred from the recovery vessel to the system to maintain it at the appropriate operating pressure by using the recovery compressor. The cool-down rate can be controlled by several methods to ensure that the GTA components are not overstressed during the cool-down process. This control, however, is not as critical for the cool down from 80 K to 22 K as it is for cool down from ~300 K to ~80 K because of the accelerator's material properties. Cool down from 80 K to about 22 K should be accomplished in about 1 hr. The system can then be maintained in this standby condition until accelerator operations are ready to proceed.

5.4.5.1.5 Run - With the CCS in the standby mode at 22 K, accelerator operation may be started at any time. When the RF power and/or the beam is turned on, the GHe circulating through the accelerator will be heated. This operation will require the GHe recovery system to remove some GHe, because of a temperature-induced pressure increase within the circulation lines, to maintain the pressure at the desired level. While the accelerator is operating, it may be necessary to transfer LH_2 from the storage dewar to the run dewar to maintain the appropriate liquid level in the run dewar. When the RF power and/ or beam are turned off, the CCS can be operated in a standby mode where the accelerator is maintained at ~22 K while waiting for additional accelerator tests. As an alternative, if the delay for another accelerator test is to be more than a day, rather than standby at 22 K (which uses LH_2), the system can be warmed by heat leak until the temperature reaches about 80 K. The system can then be switched to the standby mode at 80 K. When testing is resumed, the CCS can be returned to the run mode and can be cooled from 80 K to 22 K. The appropriate GHe operating pressure within the CCS will be maintained during all modes of operation by the recovery compressor. Helium will be added or removed from the GHe recovery vessel on demand by the CCS pressure-control system.

5.4.5.1.6 Warm-up - When an accelerator test has been completed and the time until the next test is more than a week or two or if the work on the accelerator required breaking the vacuum, the CCS and the accelerator can be warmed to room temperature (~300 K) by circulating the GHe through the warm-up heater, bypassing both of the cool-down heat exchangers. The warm-up rate will be controlled to ensure that the GTA components are not overstressed. Warm-up of the CCS and the accelerator should be completed in 10-12 hr. The pressure control for the helium system will prevent overpressurization during the warm-up process. The recovery compressor will transfer the expanded GHe from the system to the GHe recovery vessel as described in Section 5.4.5.1.7.

5.4.5.1.7 Depressurization - During the warm-up process, the recovery compressor will automatically transfer the expanded GHe from the system to the GHe recovery vessel. This transfer is necessary to avoid overpressurization of the CCS and the accelerator. After the system has been warmed to room temperature (~300 K), the circulation of GHe through the system will be stopped, and the remaining GHe in the system (except for a small quantity to maintain positive pressure) will be transferred to the GHe recovery vessel.

5.4.5.1.8 Purge and Fill of the LH_2 System - The LH_2 system will initially contain air that must be removed before hydrogen is introduced into the system. A pressurize-vent cycle, an evacuate-backfill cycle, or a combination of these methods will accomplish this removal. Nitrogen can be used for pressurization and/or backfill, but helium will be used in the final step before hydrogen is introduced into the system.

The rate of LH_2 transfer into a warm system will be controlled to minimize both LH_2 usage and quantity of hydrogen vented to the atmosphere.

A pressurize-vent cycle will be used to purge air from the fill line before LH_2 is transferred from a supply tanker to the storage dewar. After LH_2 is transferred to the storage dewar, another pressurize-vent cycle will be used to purge hydrogen from the fill line before it is disconnected from the supply tanker.

A pressurize-vent cycle, an evacuate-backfill cycle, or a combination of these methods will be used to purge air from the LH_2 transfer line and the LH_2 run dewar before LH_2 is transferred from the storage dewar to the run dewar, unless an LH_2 transfer has been recently made and the transfer line and dewar already contain hydrogen.

If the time between accelerator tests is to be significant, then the hydrogen in the transfer line and the run dewar will be removed in a pressurize-vent cycle. When the LH_2 run dewar is not being used, therefore, it will not contain any hydrogen but rather will be maintained at a positive pressure with nitrogen or helium gas.

During the 80 K cool down, part of the GHe will flow through the LH_2/GHe heat exchanger to cool the heat exchanger and the lines to the heat exchanger. During the standby mode at 80 K, the flow of GHe through the LH_2/GHe heat exchanger will be increased so that, when the cool down to 20 K is ready to begin, the heat exchanger and the lines to the heat exchanger will already be cold. As the LH_2 transfer from the storage dewar to the run dewar begins and progresses, the flow of GHe through the LH_2/GHe heat exchanger will be decreased so that standby at 80 K is maintained but cool down to 20 K can begin when needed without any part of the circulation lines being warm.

5.4.5.1.9 CCS Readiness Tests - Before the CCS is used to cool the accelerator, it was tested to verify that it operated as designed. Components were tested individually, in subsystems, and as the complete CCS. Leak tests were conducted on the components, on the subsystems, and on the complete system to verify that the CCS is leakproof within the required limits. CVI demonstrated that the CCS met its intended purpose in a final acceptance test of the entire system (without the accelerator). The warm-up heater was used, to the extent possible, to simulate the thermal load of the accelerator, and the bypass valve was used to simulate the pressure drop of the accelerator during these tests.

These procedures ensured that the instrumentation required to perform the test was calibrated and operated properly. CVI generated the procedures for the final acceptance test based on SOW specifications, and these were approved by the GTA Operations Group, AT-10, before the test started. The procedures defined

test methods, required personnel and equipment, data to be recorded, and test duration. The following tests were run.

- *Evacuation and purge*: The first test performed was a demonstration of the system purge by a pressure vent and/or evacuation-backfill technique. The system was evacuated with the vacuum pump and backfilled, or purged, with clean helium gas. Gas samples taken from the system were analyzed to ascertain the success of the purge. The purity analysis results served as a baseline for the purifier test that followed.

- *Purifier*: The CCS was pressurized with GHe from the storage and recovery system. LN_2 precooled the GHe purifier to its operating temperature. The CCS circulation compressor then circulated the GHe through the purifier. Periodic gas sampling was performed to determine the purity level of the system. The system circulation continued for 8 hr or until the contaminant concentration was at, or below, the acceptable level of 10 ppm by volume. At the end of the purifier test, purifier regeneration was demonstrated. Regeneration of the purifier involved isolating the purifier from the GHe system; warming the purifier to room temperature (~300 K); evacuating of the charcoal-filter bed to remove impurities trapped there during GHe circulation through the purifier; and pressurizing the charcoal-filter bed with clean GHe.

- *80 K cool down*: This test demonstrated the cool down of the CCS to 80 K. It used the warm-up heater to simulate the unpowered accelerator heat load and heat capacity profile predicted for the GTA in this mode of operation. The necessary refrigeration through the LN_2 run dewar was provided by GHe circulation during this test. Once cooled to 80 K, the CCS maintained this temperature for an operating period of 4 hr. The test also demonstrated the transfer of LN_2 from the LN_2 storage dewar to the LN_2 run dewar.

- *20 K cool down:* Following the successful completion of the 80 K cool-down test, cool down to a nominal 20 K was performed. Again, the warm-up heater was set to simulate the estimated profile of the GTA. GHe circulation was switched to the LH_2 run dewar to achieve

the required refrigeration. When the CCS reached the nominal 20 K temperature, it operated in the standby mode for a period of 4 hr with the warm-up heater only providing equivalent standby heat input. The CCS then operated for 24 hr in the full-run mode with the warm-up heater providing an estimated full-load profile, which is similar to that expected of the GTA. The CCS operated in the 20 K standby mode for another 4 hr. The temperature of the circulating GHe as held within ± 1K during each hold period. Once the 20 K cool-down test requirements were met, the CCS was prepared for warm-up.

- *80 K warm-up*: The 80 K warm-up test demonstrated the use of the warm-up heater. This test was performed after completing the 4 hr run in the standby mode at 20 K. The power profile of the heater was set to simulate the heat leak of the system and the heat capacity of the accelerator. The CCS was then warmed to 80 K and held at this temperature for a minimum of 4 hr.

- *Ambient warm-up*: Following the 80 K warm-up and temperature hold, a specified time-temperature profile warmed the CCS to 300 K. Until the system reached 300 K, the warm-up cycle was controlled by the warm-up profile selected. During the system warm-up, circulation was through the warm-up heater but not through the heat exchangers of both run dewars. Warm-up of the CCS expanded the circulating GHe and, as a result, required some GHe transfer into the helium-recovery system. Therefore, during the final acceptance test, operation of the helium recovery system was demonstrated.

5.4.5.2 Chemical and Mechanical Processes for the CCS - The only chemical process involved in the CCS is related to the adsorption of impurities by the charcoal trap in the purifier. This does not present any hazard other than overpressurization because it is accomplished at ~77 K. The only mechanical process involved in the CCS concerns the pressure change associated with the GHe recovery and circulation compressors. Protective equipment is installed to prevent over-speed and overpressurization from the compressors. The heat exchange between the cryogens (LH_2 or LN_2) and the GHe in the two run dewars involves the thermodynamic process of boiling liquid cryogen. The gaseous

hydrogen or nitrogen that results from the boiling cryogen is vented or flared, as appropriate, and the necessary protective equipment is installed to prevent overpressure.

5.4.5.3 CCS Control and Monitoring System - Insight Engineering of Sunbury, Ohio, a subcontractor to CVI, designed the CCS-control system. With programming help from the subcontractor, CVI supplied a complete cryogenic system with the control and user interface necessary to monitor and control the CCS in each operating mode. For example, flow-control valves are instrumented to report their position to the control system, and solenoid valves give a direct indication of their open or closed status to the control system. The CCS design is such that GTA project personnel will be able to modify the control system as necessary for operation with the accelerator. It is anticipated that the CCS control system will be changed from a programmable logic circuit (PLC) base ladder logic to an AT-8 standard input/output controller (IOC). This requires converting the ladder-logic software into AT-8 data base structures. Any changes made will be documented using the existing AT-8 documentation standards that are in effect for the GTA control system. This includes creating technical "folders" on Interleaf and backing up the control-system software each day.

The hardware and software for the CCS control room is explained in Change Order No. 2 to the subcontract with CVI. The hardware consists of a ruggedized IBM PC and Allen-Bradley input and output interface cards controlled by an Allen-Bradley PLC5/15. The PLC uses proprietary software to execute the ladder logic that the user programs into the PLC. The Allen-Bradley ADVISOR PC software will be used to create monitoring and control displays on the color monitor. The Allen-Bradley equipment is widely accepted in industry as rugged and reliable for process control; the computers can withstand extended temperatures, vibration, power and voltage fluctuations, contaminants, and particulates.

CVI has the contractual responsibility for SOW Specification No. 112Y254270, Section 3.1.4. Task IV for the initial checkout of the CCS and training of GTA CCS operators. CVI will train both in the classroom and at the CCS site. GTA personnel will receive instruction in the recommended safety precautions for handling cryogenic liquids with emphasis on LH_2. This training will be followed by hands-on training using the approved SOP and piping & instrumentation diagram for the CCS.

Under the terms of SOW Specification No. 112Y254270, Section 3.1.4, the subcontractor shall check out the CCS according to a procedure developed by the subcontractor and approved by LANL. The subcontractor shall provide the control system and the GTA load simulator (SOW Section 3.3.3) for checkout of the CCS. LANL will provide the fluids needed for the checkout. The checkout shall include training appropriate LANL personnel in operation of the system and a demonstration of all aspects of the operation of the CCS.

CVI's approach to the checkout of the CCS and operator training was done in two parts: part 1 was the appropriate field preparation of the complete CCS for operation; and part 2 was the final-acceptance test, which verified and checked the performance of each system component and demonstrated that the CCS will perform the operational modes and scenarios that are required for full-system operation.

Part 1, the preliminary system checkout, consisted of steps and procedures to ensure that the system would be operational as planned before start up of the CCS. This checkout included the following points.

- A visual inspection of the system was made to verify that its piping and routing was installed according to the drawings and to inspect for any potential problems that could, in any way, hinder the operation of the CCS. The anchoring of the equipment is also checked for proper mounting.

- Electrical continuity was checked and verified for all systems.

- Instruments were calibrated, and valves were adjusted for proper seating and control with respect to the valve input signals. Vacuum insulation was checked in the dewars and cryogenic piping.

- All equipment subsystems were verified to be functional and operational. Relief devices were inspected to ensure proper installation and to make certain that all equipment components requiring overpressure protection have the correct safety devices and pressure set points.

Part 2, the final system checkout, demonstrated that the CCS functioned successfully within the required operating modes and performance parameters. The CCS was

controlled from the CVI-supplied control console during the final acceptance test. The operation of the CCS was through the GTA load simulator instead of the GTA. The load simulator was set for each operational testing mode to simulate the expected time-temperature profile of the GTA.

The CCS is designed so that when the electrical power is interrupted, all components will revert to a fail-safe configuration until power is restored and computer control can be resumed. The fail-safe configuration will avoid trapping cryogenic fluids between valves in any section of the system, which could lead to a pressure buildup because of a heat leak to the fluid after system shut down.

GTA management is ultimately responsible for the training and assignment of personnel to operate the CCS. Each operator will be trained in the proper use of personal safety equipment, area communications, portable hydrogen detectors, and emergency-system activation. The buddy system will be in effect during all LH_2 transfers from vendor tankers into the storage dewar. In addition, the operation will be monitored in the GTA control room by closed circuit television cameras in the CCS site.

New operators will receive classroom and on-the-job training. A combined operator refresher training course, safety meeting, and SOP review will be held at least once a year. All operators will receive annual cryo-site emergency response training in addition to the routine MPF-365 emergency evacuation drills. The Los Alamos Fire Department and the Emergency Management Office will participate in these exercises.

5.4.5.4 Hazardous Materials Handling - The materials having hazards associated with their use—LH_2, LN_2, GHe, and GN_2—will be received, stored, and transferred in the CCS.

High-pressure gases—GHe and GN_2—will be received in standard Laboratory tube trailers with capacities as shown in Section 5.5. The removal of an empty trailer, and the delivery and connection of a full trailer, will be done by a trained operator in accordance with an approved SOP.

5.4.5.5 Control Operations Method - The safe operation of the CCS during operations is provided by:

- properly trained and supervised personnel;
- approved procedures;
- administrative and automatic controls;
- CRT system status;
- safety-related devices;
- mass flow rate, temperature and pressure monitors;
- hazard warning alarms; and
- mechanical back-up control.

Verification of the above procedures and conditions will be in accordance with the GTA Quality Assurance program plan. During the operation of the CCS, the operator-in-charge will be in front of the CCS computer-control system within the control room. Available to him are the approved CCS SOP, system status CRT display, computer keyboard, cryo-site television monitors, and hydrogen gas detection meters and flame detectors. The operator will start a cooling mode by manual keyboard command entries and/or a computer-controlled program to progressively cool an experiment at a controlled rate to a predetermined temperature.

An example of this procedure would be the cool-down mode. This initial refrigeration mode of cooling the CCS and the GTA beam line components is accomplished mostly with LN_2 to minimize the use of LH_2 for economic reasons. The cool-down rate will be controlled so an estimated 4,000 kg of mostly copper will be cooled from 300 K to 23 K in 5 hr with a maximum temperature differential of 50 K between the supply and return helium coolant flow. During the 5 hr cool-down mode, the operator will monitor the system to see that the automatically controlled liquid level, temperatures, pressures, and mass flow rate through the system remain within the allowable tolerances.

Computer models of the cool-down mode show that the decreasing rate in component temperature stays well within the 50-K differential temperature limit. If the temperature limit is approached during the actual run, the out-of-tolerance condition will be brought to the operator's attention by a blinking on the parameter's value display on the operator's screen, or other warning, and corrective action will be taken. The operator will follow the instructions in the SOP, which provides the corrective actions. The corrective actions will increase the flow of coolant through the run tank heat exchanger bypass valve; warm the coolant flow by diverting helium through the 40 kW heater; or reduce the coolant flow rate though the GTA beam line components until the temperatures return to the

allowable limits. As the load temperature approaches that of LN_2, the flow of helium will be redirected through the LH_2 run tank heat exchangers and the flow through the LN_2 run dewar will be stopped. The cooling rate from 70-23 K is within the differential temperature limit, and the limiting factor will be the ability of the make-up/recovery compressor to maintain system pressure.

Operating as a closed-loop helium-coolant circulator, the CCS is designed to be fail-safe. For example, when electrical service is interrupted, system components default to a position or condition that avoids potentially hazardous consequences. Valves move to a spring-loaded position that prevents the trapping of cold fluids between valves. The system also contains redundant and/or backup safety devices in critical areas. These redundant relief devices are in the cryogenic storage dewar vent systems and transfer lines. Another measure of safety is provided by increasing the wall thickness of the LH_2 run dewar to contain the overpressure which would result from an internal deflagration, and by operating the system below the design limits.

All operations will be managed by the CCS supervisor and will be periodically monitored by appropriate safety personnel to ensure adherence to safe and approved operating practices. The safe operation of the CCS is provided for by properly trained and supervised personnel operating a well designed and safe system, which includes automatic controls, monitors, and alarms; backup mechanical controls; and administrative controls and procedures (including SOPs for all operations).

5.4.5.6 Safety-Related Monitoring and Control Systems - Two valves in series control the flow of LH_2 to, or from, the LH_2 storage dewar. The valve that is closest to the storage dewar is pneumatically actuated and can be closed from three locations: the control console, locally (at the fill station), and remotely (from near the gate into the exclusion area from La Mesita Road). The valve controls at the fill station and at the gate are hard-wired so that the control computer and its software are not necessary to close the valve. This is a fail-closed valve: that is, if electrical power or gas supply to the actuator fails, the valve will close itself. The second valve is a manual shutoff valve.

The CCS area, especially the LH_2 storage and the LH_2 run dewars, will be monitored by television cameras so that personnel in the control room can visually examine these areas.

A pilot-head temperature-detector manifold system is over both the LH_2 run dewar and the LH_2 storage dewar. These detectors will activate the deluge systems to keep the surface of the LH_2 run dewar and the LH_2 storage dewar cool in the event of a fire.

Permanently installed hydrogen monitors are located over the top of the LH_2 run dewar; in the vicinity of the fill station at the LH_2 storage dewar; in the air intake of MPF-365; and in the CCS equipment room. If hydrogen is detected (indicating that a leak has occurred), these alarms will activate a warning system. In addition, portable H_2 monitors will be available for use by all personnel entering the area in the vicinity of a hydrogen system. The stationary and portable hydrogen monitors will be maintained and calibrated periodically.

Hydrogen monitors at the air intakes for the north mechanical room trigger an alarm in the 40-kW cryogenic plant control system. The MPF-365 intake and exhaust fans can then be shut off manually.

The ventilation fans in building MPF-365 will be shut off if hydrogen is detected at the inlet. These fans also provide ventilation for the 40-kW cryogenic equipment room.

Oxygen monitors are installed in the beam tunnel and equipment building. These monitors will activate an alarm if the amount of oxygen drops below a safe level for personnel to enter or to work inside the building. The oxygen monitors will be maintained and calibrated periodically.

Access to the equipment building and to the LH_2 storage dewar area will be administratively controlled to limit the number of people and the length of their stay in these areas. These areas will be properly posted with their potential dangers and restricted access. A box will be placed at area entrances for deposit of ignition sources (e.g., matches and cigarette lighters) by personnel entering the area. Adherence to the use of the deposit box will be administratively controlled.

The accelerator will be monitored for parameters, such as temperature and flow, and will be shut down if it is indicated that the CCS is not maintaining the accelerator within acceptable operating limits.

5.4.5.7 Operational Reliability and Maintenance - CVI delivered a manual on the CCS describing the required maintenance to ensure a reliable and safe system. The maintenance requirements were incorporated into an approved SOP for periodic and routine inspection, check out, maintenance, and repair of the system by properly trained personnel. An appropriate record of all maintenance work will be kept. Engineering and project personnel will review this log periodically to verify that the required maintenance is being performed.

5.4.5.8 Operations or Shut Down Under Accidental or Abnormal Conditions - It is the firm belief of the GTA cryogenic team that the most important action one can take is before an operational shut-down under accidental or abnormal conditions. The system is designed to fail-safe under abnormal conditions (see Section 6.2.5) and to prevent or limit the extent of damage that would result from the most probable postulated accident scenarios (see Appendix S, Attachment H and Section 7.3.5). As the Boyer Review Committee stated in its final report, dated February 14, 1990, "the team believes that this facility was designed with safety as a paramount concern and that it can be operated safely to accomplish the designed objectives."

As many accident or abnormal conditions as possible were evaluated, and provisions to negate them have been incorporated in to the design of the CCS. Even with advanced planning and the incorporation of built-in safeguards to maximize system safety under all conditions, however, it must be acknowledged that controls and protection devices alone cannot cover every abnormal condition or accident.

The loss of electrical power is a common event that will result in an unscheduled shut-down of the CCS. When electrical power is lost, the automatic computer control of the CCS stops and built-in mechanical-position devices move components to the fail-safe state. For example, the helium circulator that might have been running at 20,000 rpm at the time of the power interruption, will slow to a stop, and the flow of helium through the coolant loop will cease.

The venting of N_2 and/or H_2 from the run dewars will rapidly diminish as the flow of helium through the respective heat exchanger stops. Automatically operated valves controlling the flow of LH_2 or LN_2 from the storage dewars to the run dewars will close and the transfer of cryogens will stop. At this point, the CCS will be in a static, but stable, state and can remain so for a long period of time. The radiant heat leak into the

coolant loop is low, so the helium pressure within the vacuum-jacket lines will gradually approach the setting of a relief device. Even then, the lifting of a relief valve and the release of a small quantity of helium does not create a problem. The relief valves are located throughout the system where the closing of a valve (or valves) could trap a volume of cold gas. A relief valve will relieve when its set point is exceeded. This will release a small quantity of gas, which should not present a problem or a hazard within the confines of its location whether it be outside, in the equipment room, or in the tunnel. Once power is restored, the operator can check the status of the system and resume normal operations.

Most of the postulated accidents that were analyzed involve an uncontrolled release of hydrogen and subsequent fire because this type of accident has the potential of causing the greatest damage to the cryogenic plant and personnel injury. Although the probability of an accident has been rated "extremely unlikely," maximum effort and considerable expense has been committed to the protection of personnel and equipment. This protection is present in the design improvements and administrative controls. Design improvements include:

- protective barriers, which will stop a runaway vehicle from impacting the hydrogen system and will shield personnel from a hydrogen fire;
- a hydrogen run dewar designed to contain the overpressures of an internal deflagration;
- a run dewar vent stack to flare the hydrogen freed during the run modes;
- redundant safety-relief devices;
- remotely operated shut-off valves;
- automatic sprinkler systems;
- hydrogen gas detectors;
- oxygen sensors; and
- television monitors.

The primary administrative control is to limit the hydrogen inventory by matching the quantity present in the dewar to the experimental load. Other controls keep the operating pressure within the hydrogen system at the lowest possible level, which keeps the potential energy levels to an absolute minimum.

The SOP for the CCS will contain a section on the proper action to be taken in the event of an emergency. An accident involving the uncontrolled release of hydrogen that results

in a fire is the greatest concern. However, if the fire is extinguished without stopping the flow of gas, an explosive mixture may form that could create a more serious hazard than the fire itself, should re-ignition occur from the hot surfaces or other sources. The most effective way to fight a hydrogen fire is to shut off the flow of gas, if possible, or let the fire burn out while protecting the other equipment from the fire. If it is necessary to extinguish the flame in order to shut off the flow of hydrogen, a dry-powder extinguisher is recommended.

The usual fire-fighting practice is to prevent the fire from spreading and let it burn until the hydrogen is consumed. Dry-powder fire extinguishers will be available in the area. The local fire department will be advised of the nature of the product being handled and will be made aware of the best methods for combatting hydrogen fires. The Los Alamos Fire Department will participate in accident-simulation drills as part of the emergency response team. These drills will be coordinated with the AT Division Safety Officer and Emergency Management to ensure CCS operators and other GTA and off-site personnel derive maximum benefit from the exercise.

Routine CCS operator-training classes will be scheduled periodically to maintain operator proficiency. In addition, there will be a combined annual operator refresher course, safety meeting, and SOP review.

5.5 Types and Quantities of Hazardous Materials Used

Tables V-3 and V-4 list the hazardous materials to be used in building MPF-365 and in the operation of the CCS. The following sections further describe each hazardous material. All materials are labeled to differentiate between hazardous and nonhazardous material. Figure 5-13 shows hazardous material storage locations.

5.5.1 Hazardous Materials used for the 40-kW CCS

Materials involved in the operation of the CCS involving hazards include cryogens (LH_2 and LN_2) and compressed gases (GHe and GN_2).

There are no radioactive or significantly toxic materials involved in the operation of the CCS. Although He and N_2 are neither radioactive nor toxic, they are included here because they can cause asphyxiation and frostbite. A summary of the quantity (typical and maximum) of the hazardous materials used in operation of the CCS is given in Table V-4. The hazards from the cryogens and the compressed gases are discussed in Chapter 7. Gaseous nitrogen and helium,

Table V-3 Hazardous Materials Used in MPF-365

Material	Quantity	Where Used	Hazard
Cryogens LN_2	4,000 gal 100 ℓ	750-W refrigerator Neutral beam detector station	Frostbite, asphyxiation, and pressure
Compressed gases GN_2	Two tube trailers 5000 scf @ 2400 psi 16 A size cylinders outside	Backfill gas	Asphyxiation and pressure
GHe	Two tube trailers 5000 scf @ 2400 psi Four A size cylinders outside	Pure gas supply 750-W refrigerator	Asphyxiation and pressure
H_2	20 cf	Injector	Flammable
Sulfur hexafluoride	Four A size cylinders outside	Injector	Asphyxiation and toxic breakdown products
Argon	Eight A size cylinders outside	Backfill gas HPCTB	Asphyxiation and pressure
Oxygen	Cylinder present only when welding is done	Welding	
Acetylene	Cylinder present only when welding is done	Welding	
Silicon oils Silicon fluid DOW corning Type No. 461	1,056 gal	Outdoor electrical transformers	NEC-rated less flammable
Envirotemp 200	800 gal	RF-power system	Ignition resistant fluid
Cesium chromate	Less than 100 g	Injector	Carcinogen
Solvents (acetone, ethanol, freon)	Less than 1-ℓ containers in labs, 55-gal drums outside	Degreasing	Fire and toxicity
1,2 Dichlorethane	1 ℓ	Laser lab	Flammable, toxic
Lead Sheet	As required	Shielding	Toxic material
Water treatment chemicals UN1760	5-gal container 55-gal drum	AHU-4 in south mechanical equipment room Water equipment room 115	Corrosive liquid
UN1824 (sodium hydroxide liquid)	55-gal drum	North mechanical equipment room	Corrosive liquid

used for purging, is stored in standard, commercial tube trailers with 38 tubes per trailer. Each tube on a tube trailer is isolated by a shut-off valve. The shut-off valves on all but one tube will be kept closed to minimize the quantity of compressed gas available to the system.

Table V-4 Hazardous Materials Used in the Operation of the CCS

Material		Where Used	Quantity		Hazard
			Typical	Maximum	
Liquid Cryogens	LN_2	Storage dewar	2,000 gal	4,000 gal	Frostbite, asphyxiation, and pressure
		Run dewar	900 gal	1,790 gal	
		Purifier	25 gal	1.5 gal	
		Vacuum pump cold trap	1 gal	1.5 gal	
	LH_2	Storage dewar	10,000 gal	28,000 gal	Frostbite, asphyxiation, overpressure, and fire
		Run dewar	1,500 gal	4,050 gal	
Compressed Gases	GN_2	GN_2 storage (purging)	1,400 ft^3 (1 tube)	50,600 ft^3 (1 tube trailer of 38 tubes at 2,200 psig)	Asphyxiation and stored energy
	GHe	GHe storage (for purging and for makeup to the GHe recovery system)	1,330 ft^3 (1 tube)	53,200 ft^3 (1 tube trailer of 38 tubes at 2,200 psig)	Asphyxiation and stored energy
		GHe circulation lines (for cooling the accelerator)	240 lbm (77 ft^3 at 323 psia and 21 K)	240 lbm (77 ft^3 at 323 psia and 21 K)	Frostbite, asphyxiation, stored energy, and overpressure
		GHe recovery tank	50 lbm (1,600 ft^3 at 45 psia and 300 K)	275 lbm (1,600 ft^3 at 250 psia and 300 K)	Asphyxiation and stored energy

5.5.2 Liquid Nitrogen

Liquid nitrogen is used in several applications as shown in Tables V-3 and V-4. The primary hazards from this element as a cryogen are the possibility of burns from leaks or spills and oxygen deficiency caused by displacement of air. Oxygen monitors are installed to warn workers of oxygen deficiency in the tunnel, the CCS equipment room, and the compressor room east of MPF-365.

5.5.3 Gaseous and Liquid Hydrogen

In addition to the previously described CCS liquid H_2 operations, a small quantity of gaseous H_2 is required (20 cf per small bottle) for use in the injector. This quantity of H_2 released into the tunnel presents no hazards. The resulting H_2/O_2 ratio would be well below the 4% lower explosive limit (LEL) for a hazardous mixture. The injector enclosure is vented and there are no areas in the vicinity of the injector where the hydrogen would collect if a leak in the cylinder occurred.

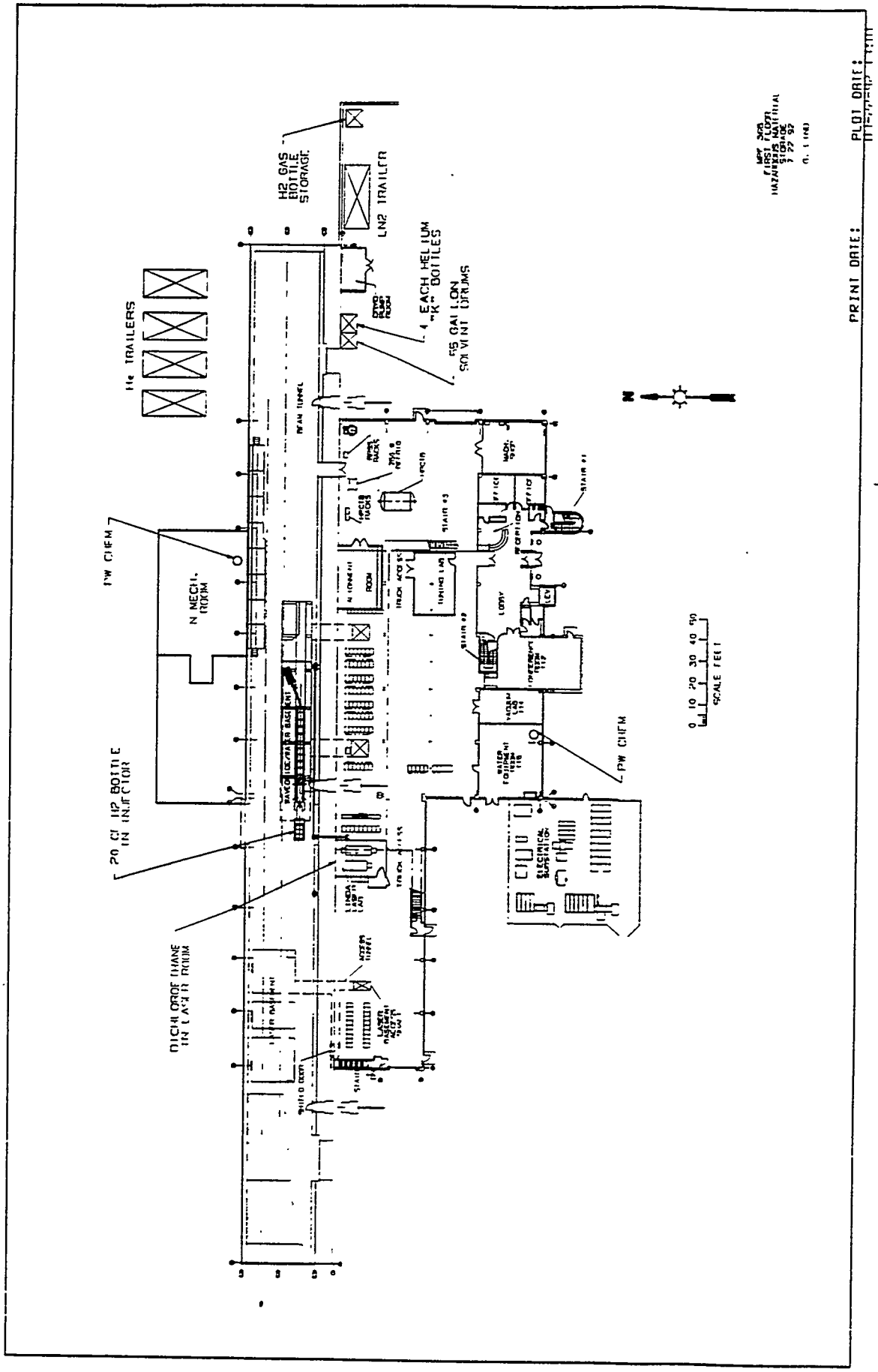

Fig. 5-13. Hazardous material storage.

5.5.4 Solvents

The kinds and quantities of solvents used by GTA are similar to those generally found in physics laboratories. Several laboratories have amounts of acetone, alcohol, and freon on hand in amounts no greater than 1 ℓ. Nonhazardous solvents are used when possible. The labs draw solvents from 55-gal drums located outside the building. The use, storage, and labeling of solvents are in accordance with the LANL Environment, Safety, and Health Manual AR 6-1, "Chemicals."

The LINDA laser system requires the use of 1,2 dichloroethane as a solvent for laser dyes. The dyes are essentially nonhazardous, but the solvent is flammable and toxic. The procedure for laser-dye mixing is outlined in the LINDA SOP and requires the use of a fume hood and eye, skin, and respiratory protection. A flammable-liquid storage cabinet is used to store this material. The laser room is protected by a water sprinkler system.

5.5.5 Compressed Gases

The high-pressure gases are GHe and GN_2. They are delivered and stored in high-pressure tube trailers. GHe also is stored in four Type "T" helium gas bottles in the MPF-365 east courtyard and in a 1,600 ft^3 tank at the CCS site.

These four Type "T" gas bottles of GHe are used with the 750-W refrigerator. Displacement of air is not a hazard in the MPF-365 high bay because the GHe volume is very small in comparison to building volume.

GHe from the CCS is piped into the CCS equipment room and the tunnel where fixed oxygen monitors are located to warn of oxygen depletion.

Compressed gas cylinders of argon, sulfur hexafluoride, oxygen, and acetylene are used as needed. The sulfur hexafluoride is used with the injector in the beam tunnel. Argon is used as a backfill gas for operations in the beam tunnel and the high bay. Oxygen and acetylene are used in welding operations throughout the facility.

5.5.6 Chemicals in Laboratories and Shops

Employees may be exposed to aerosols, vapors, and gases during routine laboratory and shop activity, such as welding, soldering, gluing, cleaning, cutting, painting, and analysis. HS-5 performs monitoring of tasks where exposures may be of concern and recommends personnel protec-

tive equipment. Depending on the task, workers have available and are required to use eye, hand, and face protection. Chemicals in shops and labs are normally dispensed from squeeze bottles, and HS-5 has not identified a requirement for fume hoods other than in the laser room. Eye-wash stations are available where chemicals are used. Chemical quantities and types do not warrant safety showers. Local exhaust ventilation is available at the welding table on the first floor.

Another personnel hazard is exposure to cleaning solvents and other chemicals with toxic or harmful vapors. Normally common cleaning solvents such as alcohol or freon are used in small quantities. Personnel conduct all work that involves toxic solvents and chemicals in accordance with MSDS recommendations and/or guidance from HS-5 industrial hygienists. Safety gloves and clothing provide additional protection. Eye-wash stations are provided to handle most common emergencies involving toxic solvents and chemicals. Personnel dispose of the waste solvents and chemicals in approved, labeled satellite storage areas located in MPF-365. Waste disposal is done according to the procedures in the LANL Environment, Safety, and Health Manual AR 10-3, "Nonradioactive Chemical Waste."

5.5.7 Cesium Chromate

Cesium is used in the injector to enhance the production of H^- particles. The thermal reduction of cesium chromate produces the cesium. Cesium vapor condenses on the cool walls of the injector. Cesium and chromium compounds require handling as hazardous materials. The injector is back-filled with argon, but when it is opened to the air, moisture in the air reacts with the cesium to form cesium hydroxide (CsOH), a corrosive material. However, only gram amounts of cesium compounds are involved. HS-5 monitors cesium handling and recommends proper personnel protective equipment. In addition, the injector SOP governs cesium chromate and cesium operations.

5.5.8 Lead Shielding

Lead geometries are used to provide local component shielding during operations. Lead is a toxic metal; therefore, gloves must be used during handling.

5.5.9 Oils

Silicon oils are used in the electrical transformers at the GTA substation and in the RF system. Small quantities of vacuum pump oils are used in pumps in the beam tunnel, high bay, and laboratories.

5.5.10 Water Treatment Chemicals

Two corrosive liquids are used for water treatment. These are UN1824 sodium hydroxide liquid and UN1760. The UN1824 is in a 55-gal barrel in the north mechanical equipment room and is connected directly into an AHU. The UN1760 is in a 5-gal container in the south mechanical equipment room and is connected directly into AHU-4. UN1760 is also present in the water equipment room where a 55-gal drum of it is fed into the water system.

5.6 Receiving, Storing, Handling, and Transferring Hazardous Materials

5.6.1 Liquid Nitrogen

LN_2 for the 750-W helium refrigerator is stored in a cryogen trailer immediately east of the cryogenic compressor building (MPF-617). The Laboratory Gas Processing Group delivers the trailer, and trained personnel hook it up to the refrigerator system. The transfer of LN_2 from the trailer to the compressor and the refrigerator occurs within a closed system.

LN_2 for the CCS will be received from a commercial supplier or the LANL gas processing group in a standard tanker and will be stored west of MPF-365. A trained operator will deliver and connect the supply tanker and transfer the LN_2 into the LN_2 storage dewar.

Small quantities of LN_2 are stored in 1-gal. dewars in the work area and transferred by experienced technicians assigned to GTA.

5.6.2 Hydrogen

Hydrogen is used in the GTA injector and the CCS. Hydrogen for the injector is received in small (20 cf) cylinders, only one of which is used in the injector at any time. Once the cylinder is installed in the injector, the transfer of hydrogen to the injector ion source occurs within a closed system that vents hydrogen to the building exhaust system at a rate of 5 to 6 sccm. Because of the low-flow rate and the small volume of the cylinder, hydrogen venting does not create an explosion hazard. Building MPF-365 stores a maximum of four cylinders that are properly secured and isolated from oxidizers.

LH_2 for the CCS will be received from a commerical supplier (Linde or Air Products) in a standard tanker (commonly 13,000-gal capacity). A LANL trained operator and the driver of the tanker will connect the supply tanker and transfer the LH_2 into the LH_2 storage dewar according to an approved SOP. No other personnel, or operations, will be allowed within the exclusion area

during this operation. The LANL operator and the tanker driver provide two people so that operation is on the "buddy system."

5.6.3 Compressed Gases: Helium, Argon, Sulfur Hexafluoride, and Nitrogen

The Laboratory Gas Processing Group delivers compressed gases in cylinders. Experienced technicians handle the cylinders and secure them by a chain or strap when stored. Helium, nitrogen, argon, and sulfur hexafluoride cylinders are used in the building. Additional cylinders are stored in the east courtyard in appropriate storage racks. Because of the large volume of the building and its mechanical ventilation system, a leak from a cylinder would not create an oxygen-depletion hazard. As an additional safeguard, however, oxygen monitors are installed in the high bay and tunnel.

The use and proper transfer of each type of gas do not create any hazards. Argon, used for purging, is vented in small quantities into the tunnel. Sulfur hexafluoride, used to charge the enclosed ion source of the injector, is delivered in cylinders. Two GN_2 tube trailers and two GHe tube trailers are parked northeast of the building near the cooling tower. The GN_2 trailers supply the high bay and tunnel through a building-piping system. The GHe trailers supply makeup helium to the 750-W refrigerator. Transfer of helium to the 750-W refrigerator occurs within a closed system. The oxygen monitors would provide warning in the event of an oxygen deficiency caused by leakage of these systems.

Any transfer of a gas or a liquid cryogen from a storage dewar or a trailer to another part of the CCS will be done by a trained operator in accordance with an approved SOP.

5.6.4 Solvents

Solvents, primarily acetone, alcohols, freon, and trichloroethane, are received in quantities that will be used within a six-month period, usually 55-gal drums, and stored outside in a metal shed with integral spill containment. For use within the building, solvents are transferred into plastic squeeze bottles of 1 ℓ, or less, or into 1-gal safety cans. Squeeze bottles and safety cans are labeled with contents and a hazard warning. Waste solvents and solvent-contaminated rags are properly stored in designated satellite storage areas. The waste management coordinator arranges for disposal of these wastes through EM-7.

5.6.5 Chemicals

Chemicals other than solvents, such as adhesives and paints, are stored in small quantities (normally less than 1 gal) in manufacturer's containers. Flammable liquids are stored in cabinets that meet

National Fire Protection Association (NFPA) 30 requirements. HS-5 monitors the use of appropriate personal protective equipment used in the handling of chemicals.

5.6.6 Cesium Chromate

Cesium chromate is received in 100-g manufacturer's bottles and stored in a secure location in MPF-19. Trained, experienced personnel transfer cesium chromate into the injector ion source according to the injector SOP. Personnel wear gloves and eye protection when loading or cleaning the ion source.

5.6.7 Lead Shielding

Lead shielding is stored off the floor. When the lead shielding is outside, it is covered. A minimum amount is maintained on site for shielding purposes. Personnel must wear gloves when handling lead.

5.7 Component Activation

After GTA operation, certain components will be activated and could pose a hazard during maintenance and repair. Sufficient cooling time is required to bring activation levels down to acceptable levels for access. Activation levels will be monitored by HS-1. HS-1 will also do a contamination survey prior to maintenance activities where experience has shown removable activation could be a problem. If movement of such parts is required, shielded casks designed for such purposes will be utilized to transport them to the appropriate facilities. If it is necessary to transport these on roadways on or off-site, such movement will be guided by the appropriate U.S. Department of Transportation regulations and will be monitored by HS Division.

5.8 Control Room and Associated Monitoring and Control Systems

The control room is on the second floor (Fig. 5-14). The primary purpose of the control room is to operate the GTA experiment and to collect and display experimental data. In addition, the control room contains the following functions:

- all accelerator subsystems—status and control;
- high-voltage interlocks—status;
- Radiation Protection Safety System (RPSS)—status and enable;
- run permit—mode select and status;
- fast protect system—status;
- accelerator water cooling—status;
- cryogenic cooling system (CCS)—controls and status;
- CCS fire alarm—status lights;
- stack vent status;

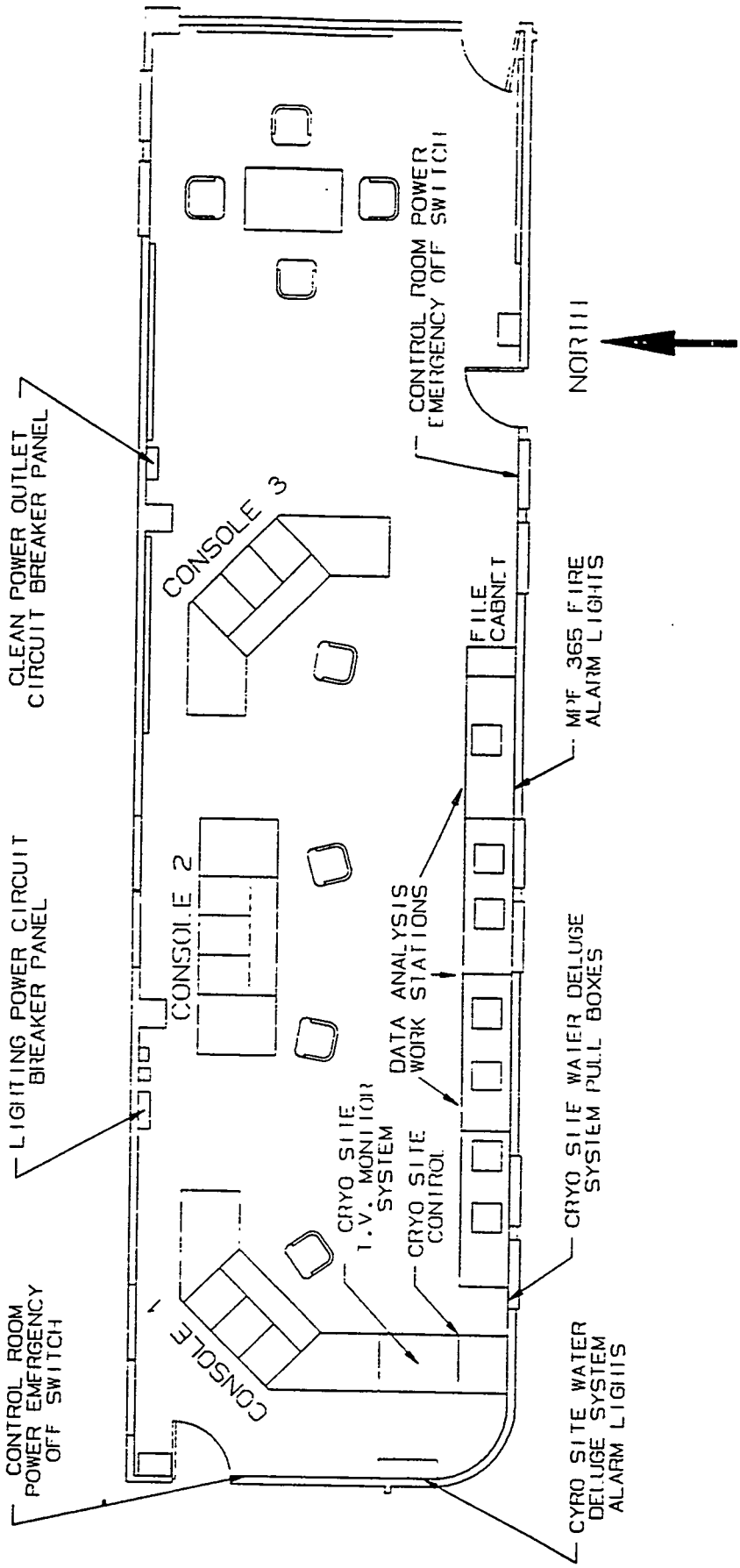

Fig. 5-14. Control room-second floor.

- TV surveillance monitors;
- tunnel ventilation;
- oxygen monitors;
- hydrogen monitors; and
- voice paging.

5.8.1 All Accelerator Subsystems—Status and Control

GTA operations are conducted from the control room primarily by three console groups: Operation of the injector and RF systems is performed by console group #1 (Fig. 15); operation of the accelerator structure and diagnostics is performed from console group #2 (Fig. 16); and operation of the beam transport, telescope, neutralizer, and beam sensing is performed from console group #3 (Fig. 5-17).

Each console group has operator interface (OPI) consoles, which provide direct control and monitoring of the GTA through the computer-control system. These OPI consoles are based on computer workstations and use large, high-resolution, color-graphic display CRTs. Multiple windows and a mouse point-and-click interface on the OPI consoles mimic the traditional hardware control panels and provide flexibility in display formats. Through the OPI consoles, the operator adjusts beam-line parameters, monitors most measurements, and interacts with automatic-control programs. The OPIs are augmented by oscilloscopes and video monitors that display digitized images from GTA diagnostics. OPI displays also monitor the status of some independent functions such as RPSS, run permit, and fast protect.

One function of the OPI consoles is to alarm the operators of out-of-normal conditions. Alarm limits are set and detected by software, so they are not used for personnel or critical equipment protection. Instead they notify the operators of impending or threshold conditions that could cause off-normal operation or an abnormal trip of one of the safety-related or hardware interlock systems.

Each operator console group also will contain hard-wired status and control panels and one or more telephones, which are connected to the facility voice pager. TV monitors survey key areas in the facility.

Additional work areas are provided in the control room for experimental planning and data analysis. These area workstations, which are similar to the OPI consoles, permit direct access to GTA parameters and archival data.

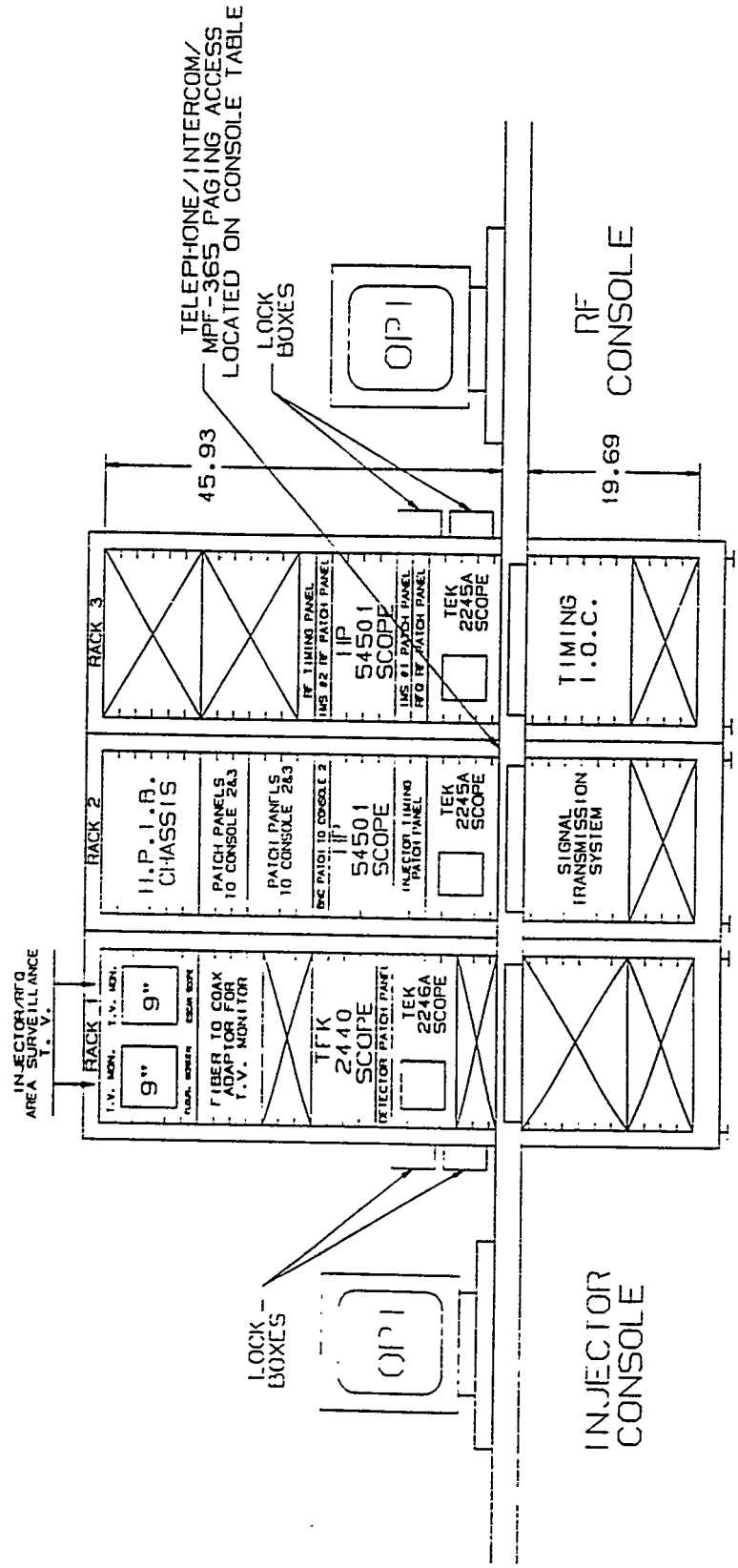

Fig. 5-15. Console group one.

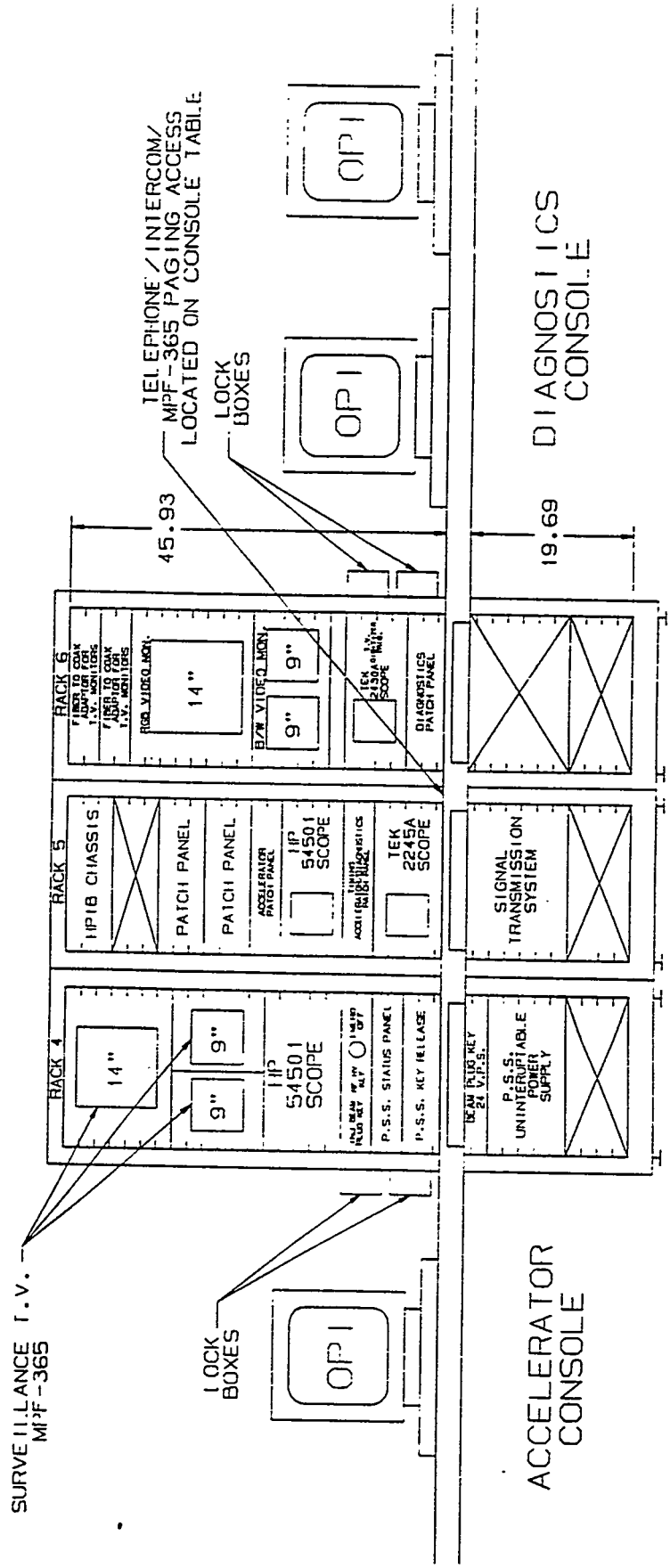

Fig. 5-16. Console group two.

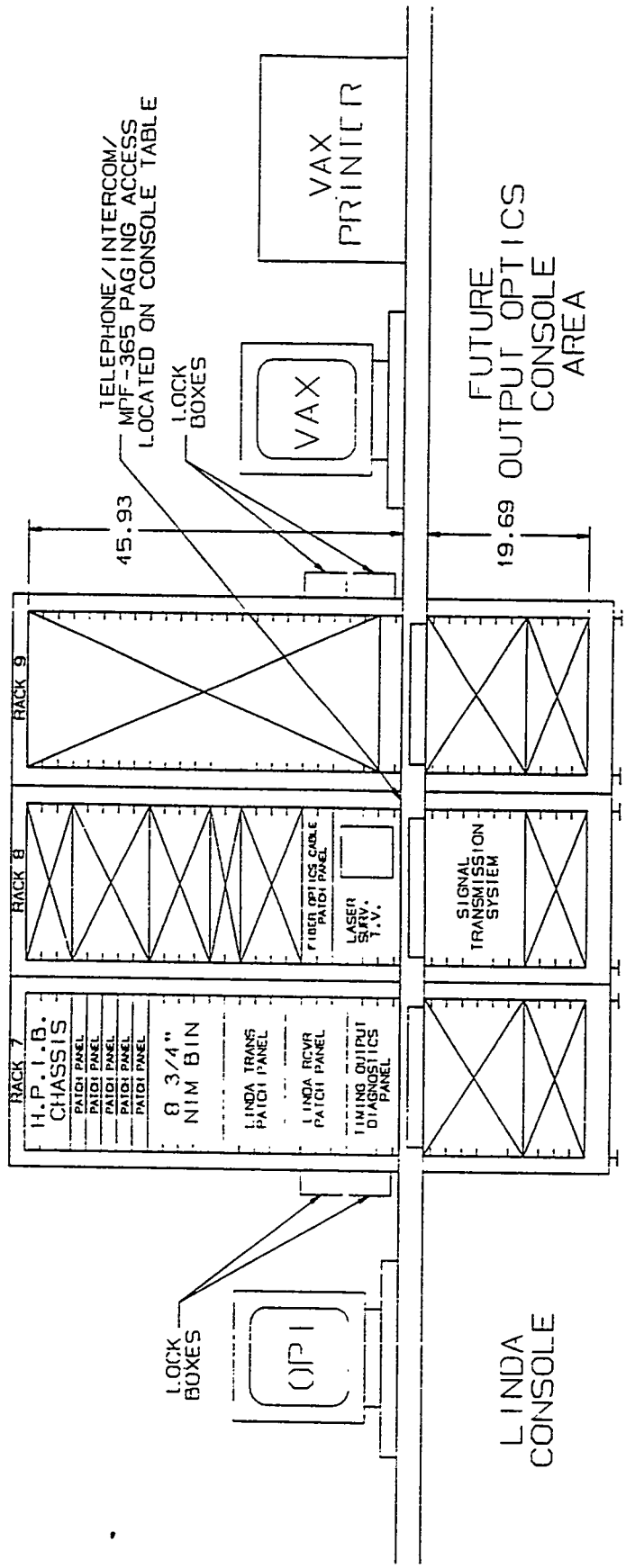

Fig. 5-17. Console group three.

5.8.2 High-voltage Interlocks

Operators at any of the OPI consoles can call up a display screen that shows the status of high-voltage interlocks. The OPI console displays are not critical to the operation of the interlocks, but only guide the operators in the operation of GTA.

5.8.3 Radiation Protection Safety System

The status of the RPSS is displayed directly on a panel in console group #2. The RPSS key release panel is directly below the status panel. (See Fig. 5-16.) In addition, operators at any of the OPI consoles can call up a display screen that shows the status of the RPSS. The OPI console displays are not critical to the operation of the RPSS, but only guide the operators in the operation of GTA. The RPSS is described in detail in Appendix T.

5.8.4 Run Permit

Run permit is a collection of software interlocks augmented by a redundant "watchdog" hardware. The software interlocks are designed to enable or disable extracted beam and acceleration of the beam through the linear accelerator. (See Fig. 5-18.) Run permit uses both software and hardware to provide flexibility and fail-safe operation. The primary purpose of run permit is to protect the accelerator, but it also guides the proper operation of the various accelerator subsystems. Run permit is not a personnel safety-related system.

Inputs to the accelerator are obtained primarily from the control system. Key data channels are monitored, and run permit only enables the accelerator when all channels are within the permitted state. Interlock definition is provided from a configuration file that is read by the run-permit software. The logic applied depends on the accelerator mode, and this mode is specified by an operator. The system's "watchdog" hardware interface logic disables the system in the event of a computer hardware or software failure. In addition, a "heartbeat" periodically uses the network to test the availability and status of any IOCs that are critical to run permit. Lack of response, which could be caused by an IOC or failure, will drop the run-permit enable.

Run permit uses the same type of VME hardware elements, system software, and network as the control IOCs. The enable outputs are connected to the system safety interlock box.

Run permit allows up to eight modes of operation which depends on the objectives and scope of the current GTA experiment. Some presently defined modes are injector only, beam through RFQ, beam through IMS, beam through DTL, beam through telescope, and RF conditioning of

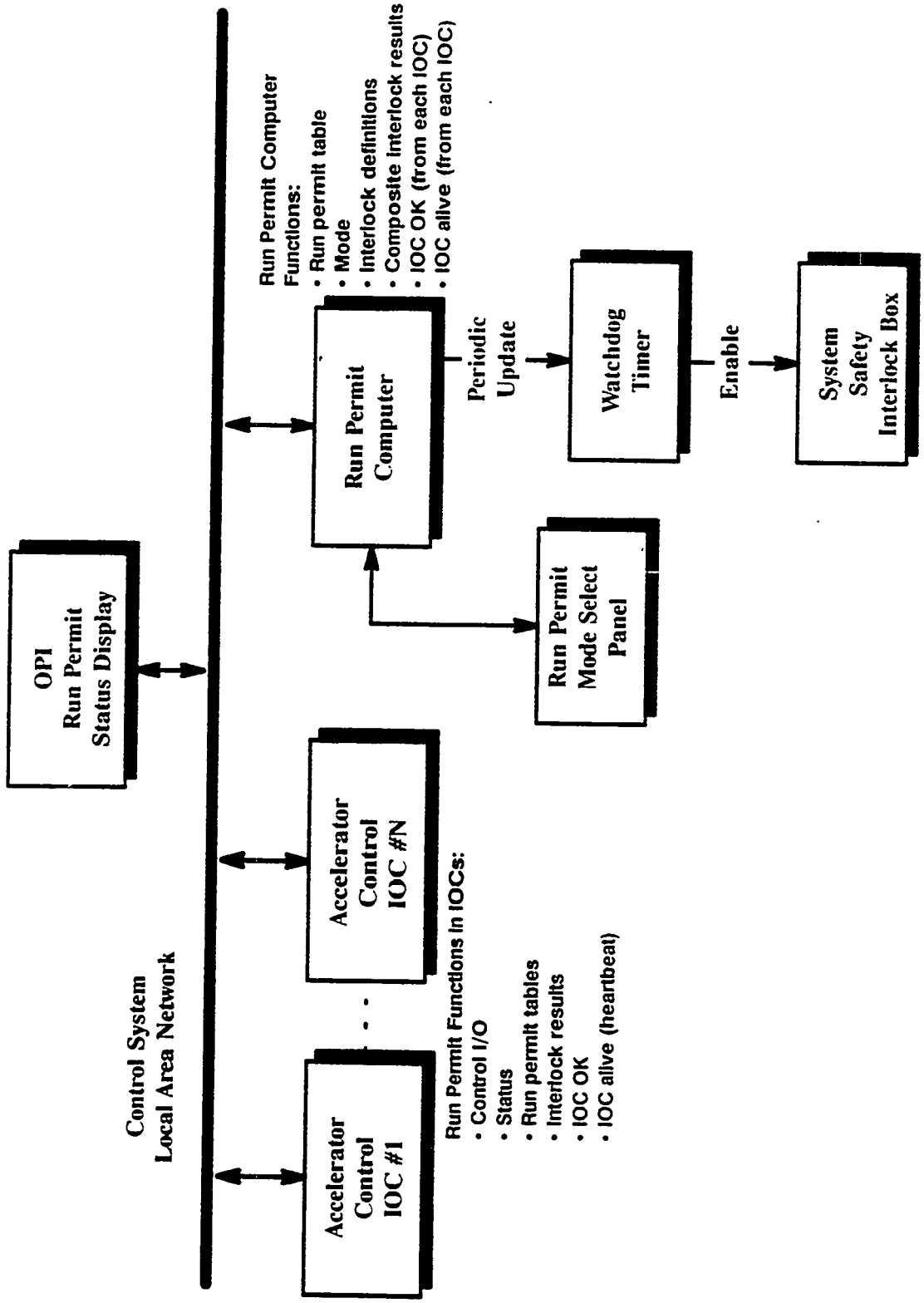

Fig. 5-18. Run permit logic.

cavities. Software tables define the interlock chains for each of these modes. The mode is selected by the operator on a mode switch panel. The mode switch panel (see Fig. 5-19) has exclusive control over run-permit and continually displays the status of the run-permit chains. The run-permit status is also available on any OPI within the control system. An operator can monitor the status and determine the cause of any run-permit failure from any OPI console.

Authorized personnel may bypass a run-permit interlock by entering an authorization code. The person's initials and the bypass date and time are displayed on the run-permit panel and are logged in an archive file.

5.8.5 Fast Protect

The fast-protect system is designed to quickly prevent both unwanted activation from beam spill and damage to the accelerator from the beam. The system can truncate the beam pulse within approximately 10 μsec if an improper condition is detected during beam generation, (e.g., radiation detected outside the beam pipe). The accelerator is allowed to resume operation on the next beam pulse. Like RPSS, this system operates independently from the computer control system. It is hard-wired (employing no computerized components), and it is fail-safe (failure of the system itself results in a safe condition). Fast-protect status is monitored directly on a panel in console group #2, and can be monitored through the control system on any OPI console. Using an OPI console, an operator can determine the cause, or causes, of faults and the order of their occurrence. Fast protect does not rely on the computer interface for proper operation, and it is not a personnel safety-related system.

Each fast protect module has eight fault inputs, which are individually enabled or disabled by switches on the module. (See Fig. 5-20.) The first, (also called the master), module in the chain generates a 10-MHz carrier. Subsequent slave modules receive this carrier from the previous module. The last module in the chain enables the injector extractor through the system safety interlock box. Any module that detects a fault input will interrupt the carrier, and this, in turn, will interrupt the extracted beam. The modules can be mounted in an IOC (either a VME or VXI enclosure) and receive their power from the backplane. The IOC monitors the fast protect logic and can determine which input or inputs caused a fault, and the settings of the enable switches. The fast-protect system's reliability is assured by the following methods.

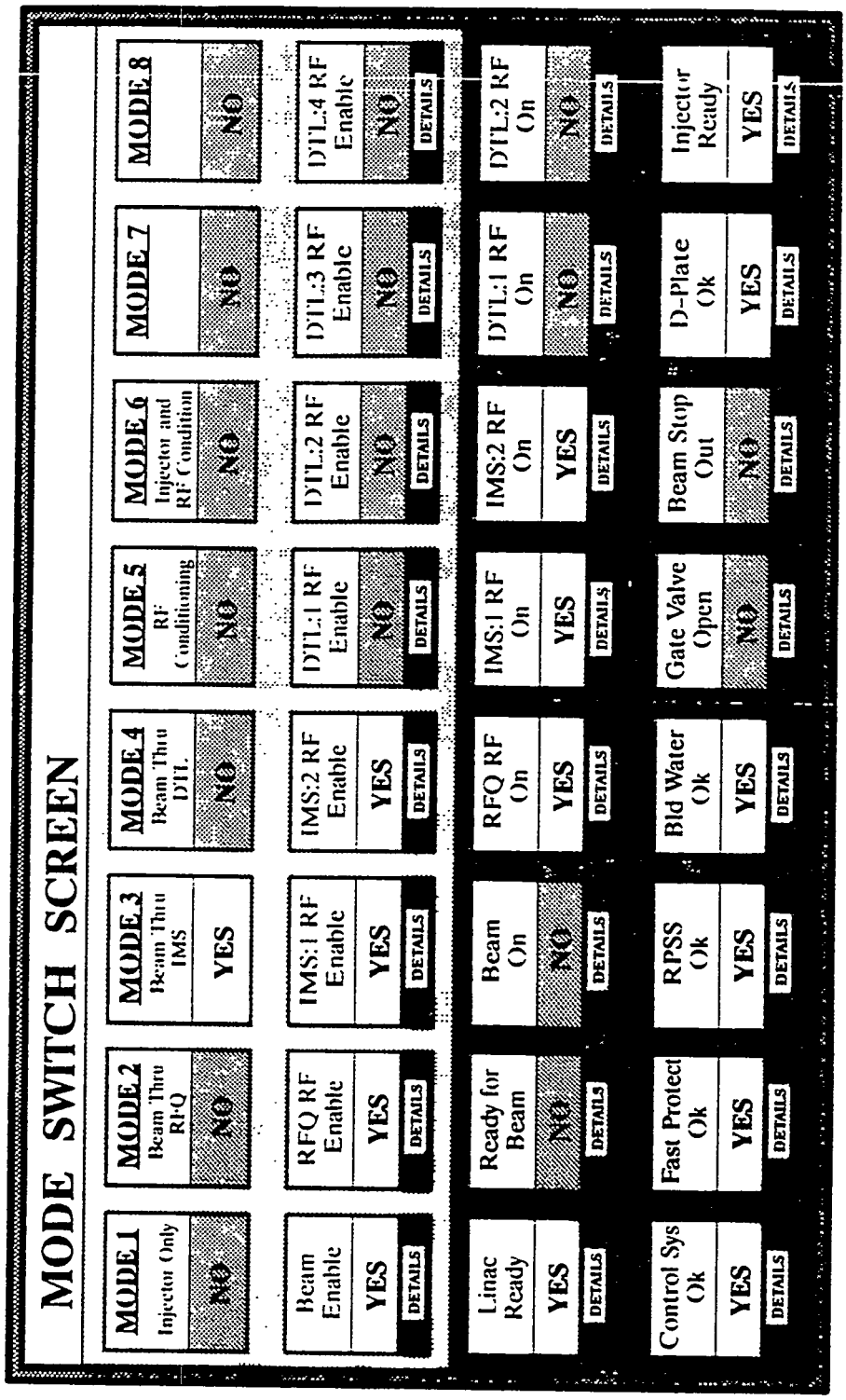

Fig. 5-19. Run permit switch and status panel.

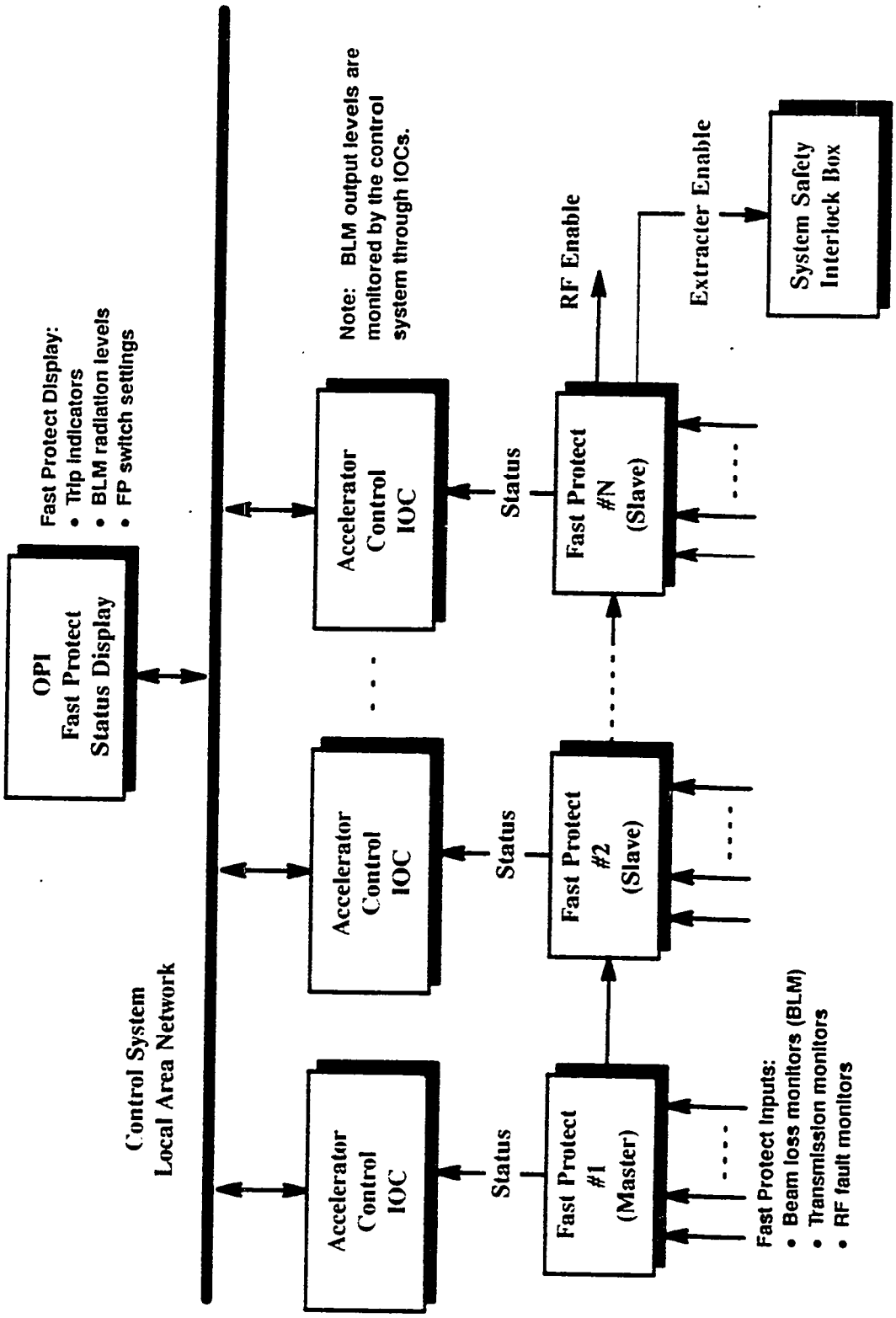

Fig. 5-20. Fast protect implementation.

- The logic provides fail-safe operation because loss of power, inputs, or carrier will remove the extractor pulse. Most logic devices in the module will fail to a safe condition.

- Modularity allows distribution of fast-protect modules throughout GTA, which decreases possible wiring errors between detectors and the modules.

- Optical isolation is provided on the fault inputs, and fiber optics is used to transmit the carrier.

- A pass condition requires a logic level of 4 - 5 V at 20 mA at the fault inputs.

- Two independent fast-protect logic blocks must agree, or the logic will generate a hardware failure and remove the extractor pulse. These two blocks use different technologies and, therefore, have different failure modes.

- Changing an enable switch causes a hardware interrupt on the backplane.

- An enable output signal is provided to turn on RF to one or more cavities.

Fast protect fault inputs come from three sources: beam-loss monitors (BLM); transmission monitors; and low-level RF (LLRF). BLMs are located between DTL cavities, at various places along the beam line in the output optics, and at some diagnostics. Transmission loss in beam line components is detected by comparing outputs from the various beam-current monitors. Detecting a significant difference between adjacent monitors will generate a fault. The LLRF field control modules will generate a fault if the RF field in a cavity differs from the setpoint. Arcs or high-reflected power in the high-power RF components will also generate a fault.

5.8.6 Cryogenic Cooling System (CCS)

The CCS is operated by a turn-key-control system delivered by CVI. (See Section 4.3.5.) It is controlled independently of the GTA computer-control system. Once the cryogen is delivered to the tunnel, the various manifolds, flow meters, temperatures, and so on are controlled and monitored by the GTA computer-control system.

The CCS control system operates the CCS from the control room using a workstation, which is in close proximity to the GTA control consoles. A status signal from the cryogenic-plant-control system indicates to the GTA-control system whether or not the plant is ready for experimental operations.

5.8.7 Control-room Operations

All control and data acquisition functions on GTA are normally performed from the control room. Subsystems within GTA must be operated independently for various reasons, such as equipment check-out, calibration, and subsystem checks before integrated operation. The console grouping and placement permits the independent operation of multiple subsystems yet encourages communications among the operators during integrated operations. During integrated system operation, when a beam is accelerated, a qualified shift supervisor is in charge of operating GTA experiments from the control room. Written operating procedures are followed to ensure that safety and equipment protection systems are operating properly.

During operations, the shift supervisor is responsible for the conduct of the experiment, correct operation to prevent system damage, and personnel safety. The shift supervisor ensures that GTA experimental data, configuration information and operating exceptions are entered into log books at the control consoles. A shift supervisors reference manual, which is kept in the control room, defines the duties and responsibilities of the supervisor. This manual includes a general description of each subsystem in GTA; check lists for operating GTA; interlock and safety system definitions; a GTA control system operator's handbook; training requirements; and calibration requirements and records for all equipment.

OPI console-control system access is controlled by a lock-box and by login security, which requires a unique password for each user. Direct access to control computers is controlled by an additional login security beyond the OPI access to prevent inadvertent change of control parameters.

5.8.8 CCS Fire Alarm

The CCS fire alarm sounds in the GTA control room, the north mechanical rooms, the CCS equipment room, and the outside CCS site. These areas will be evacuated if an alarm sounds. The alarm does not sound within MPF-365 (other than the control room), since the building provides shelter from any CCS fire. The alarm is also automatically communicated to the Laboratory Central Alarm Station, which notifies the Los Alamos Fire Department.

5.8.9 Stack Vent Status

A light in the control room will indicate when the stack vent blower is operating.

5.8.10 Surveillance TV Monitors

Surveillance cameras monitor the GTA tunnel, the LINDA laser room, and the CCS. The CCS surveillance consists of five video cameras that monitor three views of the LH_2 storage-tank area, one view of the run dewar area and one wide-angle view of the equipment room. Any of these CCS views can be switched onto a 14-in. video monitor.

5.8.11 Hydrogen Monitors

The status of the hydrogen detectors will be displayed in the control room.

5.8.12 Oxygen Monitors

The status of the oxygen monitors in the tunnel will be displayed in the control room.

5.8.13 Voice Paging

Each console group has at least one telephone that permits voice paging throughout MPF-365 and through to the CCS site.

5.8.14 CCS Deluge Pull Boxes

Two pull handles in the control room activate the water deluge systems at the CCS LH_2 storage tank and the CCS run tank. Activation of either of these pull handles also activates the fire alarm system.

5.9 Support Operations

The GTA facility contains small lab areas on the third and fourth floors for minor electronics and mechanical support work. Three labs on the first floor are dedicated to component tuning and alignment and vacuum-system work. These labs pose common industrial hazards associated with electrical and mechanical work, soldering, and the use of common solvents and hand tools. A small shop area on the first floor is available for welding and machine-tool use. An RF power equipment assembly area is on the west side of the mezzanine. Industrial hazards are controlled by facility inspections, monitoring of activities by supervision, safety personnel, and the building manager, and the use of standard mitigation techniques such as machine guarding, ventilation, and personnel protective equipment. Testing of accelerator subsystems and smaller components at cryogenic temperatures is accomplished in the HPCTB vacuum vessel in the east end of the high bay. The HPCTB is used to test the RFQ, IMS, DTLs, and other GTA components. It is supplied with cryogenic helium by the 750-W gas refrigerator and with RF power by the klystron or tetrode amplifiers on the mezzanine. Refrigerator operation and RF power assembly are addressed by SOPs. Component and subsystem testing in the HPCTB is covered by an SOP. The pressure and mass flow test cart is outside the vacuum lab. The cart is used for GTA component testing and its operation is addressed in SOP Number AT4:91-1011.

The space at the east end of the beam tunnel is used as a mechanical assembly and technical support area when needed. Sufficient shielding, radiation and air monitoring, and HVAC modifications will be provided to permit safe occupancy of this area during accelerator operation. The RPSS will safely accommodate this usage.

5.9.1 High-power RF Testing and/or Conditioning of GTA Structures in the HPCTB

The HPCTB in the high bay of building MPF-365 is used for component and systems testing of GTA RF structures under vacuum at cryogenic temperatures. (See Fig. 5-21.) Testing in this facility will be under the supervision of the facility shift supervisor with support from the appropriate sectors and will be done under an SWP/RW. Operation of the high-power RF system is covered by SOP AT-5:91-337; operation of the 750-W cryogenic helium refrigeration system is covered by SOP AT-10:91-02.

When GTA components are under RF test in the HPCTB, x rays may be generated. Local lead shielding will be implemented, as required, to protect personnel against this radiation. HS-1 will monitor this operation. The GTA safety officer will provide safety guidance to outside user groups.

RF leakage is possible at joints in the RF transport system because the HPCTB utilizes RF power similar to that used in GTA. All connections will be routinely surveyed by HS-5 for leakage. HS-1 will monitor these surveys.

5.10 Operational Reliability and Maintenance

One obvious goal for a space-based system is short-term reliable operation on demand. For GTA, however, long-term operation is required. Many of the concepts and components will be tested for the first time in GTA; therefore, their reliability cannot be predicted. Improving system reliability and availability will be actively pursued.

Maintenance for GTA is performed by the operating sections that have the necessary skills. These sections include specialists in mechanical systems, vacuum, high-voltage, cryogenics, computers, and instrumentation.

SOPs govern routine maintenance operations involving some hazards. Nonroutine and possibly hazardous activities require an approved SWP before the operation begins. SWPs can cover activities with or without radiation hazard.

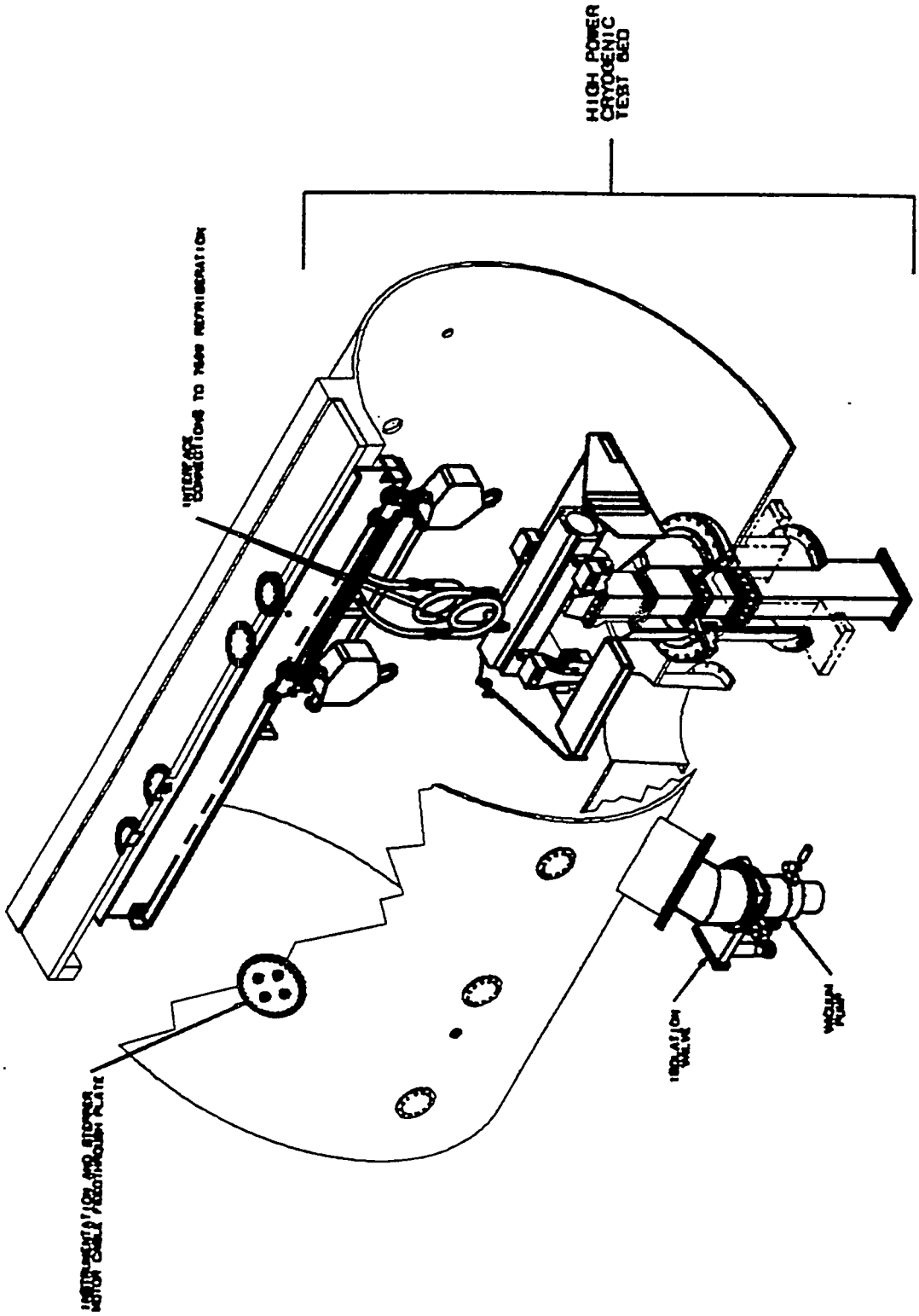

Fig. 5-21. HPCTB.

HS-1 assists and advises on maintenance concerning health physics matters because of the presence of radiation.

5.11 Safety-related Operations and Control Systems

This section identifies the safety-related instrumentation and control operations and systems used on GTA as they apply to AL Order 5481.1B (5:f, g, and i). This section explains the methods for maintaining safe control under normal operations and provisions for safe shutdown under accident or abnormal conditions. Table V-5 summarizes the purposes of the operations and systems for maintaining safe control of GTA.

Table V-5 Summary of Operations and Systems to Maintain Safe Control of GTA

Operation of System	Primary Purpose	Secondary Purpose
RPSS	Personnel safety (radiation)	
Electrical interlocks	Personnel safety (electrical)	Equipment protection
Laser interlocks	Personnel safety (laser)	
CCS operations	Personnel safety	Equipment safety
Fast protect	Equipment protection	Limits activation, guide operators
Run permit	Equipment protection	Guide operators
Oxygen monitors	Personnel safety	
Hydrogen monitors	Personnel safety	Equipment protection
TV surveillance	Personnel safety (access)	
Tunnel ventilation monitors	Personnel safety (radiation)	
Vacuum interlocks	Equipment protection	
Gas sampling	Equipment protection	
Fire Detection & Protection	Personnel safety	Equipment protection

5.11.1 RPSS

The purpose of the RPSS is to limit personnel exposure to radiation by preventing access to controlled areas where the radiation dose rate could exceed safe levels or if access to controlled areas is breached. (See Appendix T.)

5.11.2 Electrical Interlocks

Electrical interlocks are an integral part of the RF power systems and the injector. These interlocks prevent personnel from coming into contact with unsafe voltages, including ac power, high-voltage dc, RF power, and energy storage capacitors. Interlocks also protect the equipment from damage caused by unintended operating conditions, such as insufficient vacuum, arcing, and failure of critical components.

5.11.3 Laser Interlocks

A laser interlock system prevents exposure of personnel to the laser beam if the integrity of the laser enclosure or laser beam tube are not intact.

5.11.4 CCS Operations

Safety-related operations and systems related to the CCS are extensive and are covered in sections 5.4.5.6, 5.4.5.7, and 5.4.5.8.

5.11.5 Fast Protect

The fast-protect system provides a fast-acting protection against equipment damage from beam spill. The fast protect system is designed to terminate the proton beam within 10 μs of detecting beam spill with radiation monitors, or detecting an RF fault that could cause beam spill. The beam is enabled on the next macro pulse. Fast protect also prevents excess activation of beam-line components. Section 5.8.5 contains a detailed description of the fast-protect system.

5.11.6 Run Permit

Run permit is a software-interlock system that prevents GTA from operating in a manner that could cause equipment damage, and it aids the experimental operations by guiding the operations. Conditions throughout the beam line and supporting systems are continually monitored for out-of-range conditions, and the interlock chain is broken if any such condition is detected. Run permit provides great flexibility in the definition of interlock chains, especially across subsystems, and it allows selection of multiple modes that correspond to the desired GTA modes of operations. Section 5.8.4 contains a more detailed description of the run-permit system.

5.11.7 Oxygen Monitors

Oxygen monitors are throughout the tunnel, in the laser room, in the CCS equipment room, and in the compressor room east of MPF-365. Monitor outputs are run to a central alarm center; nearby visual and audible alarms warn personnel of low oxygen levels in these areas.

5.11.8 Hydrogen Monitors

Hydrogen monitors are near the LH_2 storage dewar, above the top of the LH_2 run dewar, in the CCS equipment room, and at the air intake from MPF-365. These are set to sound an alarm in the control room. The alarms are also connected to an automatic telephone dialing system to notify appropriate individuals if there is a malfunction.

5.11.9 TV Surveillance

Surveillance TV cameras monitor the CCS and the GTA tunnel entrance doors. At the CCS site three cameras cover the CCS LH_2 storage-tank area; one camera covers the CCS run dewar area; one wide-angle camera covers the CCS equipment room.

The appropriate camera or cameras is monitored in the control room during operations that involve these specific areas or systems.

5.11.10 Tunnel Ventilation Monitors

To ensure a negative pressure within the tunnel with respect to the rest of MPF-365, the ventilation exhaust fans are monitored during GTA operations when radiation might be present in the tunnel.

5.11.11 Vacuum Interlocks

Vacuum systems have interlocks to prevent damage caused by sudden loss of vacuum, loss of power, or incorrect operation of a vacuum valve.

5.11.12 Gas Sampling

Air in the tunnel is sampled and analyzed for radioactive gases. This is done before personnel are permitted in the tunnel after it has been closed off and the accelerator has been operated.

5.12 Safe Shut-down under Accident or Abnormal Operations

Unlike nuclear reactors, accelerators have no problem with fission-product decay heat after shut-down. Once an accelerator is off, it is off. After the shut-down of GTA, the safety concerns will be the access to potentially activated devices and the high-voltage RF power supply. HS-1 and HS-5 will control procedures for this access.

Subsystems are designed to react to various types of failures by methods appropriate to the consequences of the failure. For example, a failure which could result in a safety hazard to personnel is protected against strictly in hardware and with redundant protection mechanisms. A failure having minor consequences might be protected by software in the computer-control system. The computer-control system is never relied on for personnel safety.