PASSIVE SENSOR SYSTEMS FOR NUCLEAR MATERIAL MONITORING

M. L. Simpson, L. A. Boatner, D. E. Holcomb, S. A. McElhaney,
J. T. Mihalczo, J. D. Muhs, M. R. Roberts, and N. W. Hill
Oak Ridge National Laboratory
P.O. Box 2008
Oak Ridge, TN 37831-6285 USA

"The submitted manuscript has been authored by a contractor of the U.S. Government under contract No. DE-AC05-84OR21400. Accordingly, the U.S. Government retains a nonexclusive, royalty-free license to publish or reproduce the published form of this contribution, or allow others to do so, for U.S. Government purposes."

DISCLAIMER

This report was prepared as an account of work sponsored by an agency of the United States Government. Neither the United States Government nor any agency thereof, nor any of their employees, makes any warranty, express or implied, or assumes any legal liability or responsibility for the accuracy, completeness, or usefulness of any information, apparatus, product, or process disclosed, or represents that its use would not infringe privately owned rights. Reference herein to any specific commercial product, process, or service by trade name, trademark, manufacturer, or otherwise does not necessarily constitute or imply its endorsement, recommendation, or favoring by the United States Government or any agency thereof. The views and opinions of authors expressed herein do not necessarily state or reflect those of the United States Government or any agency thereof.

Managed by Martin Marietta Energy Systems, Inc., for the U.S. Department of Energy under contract DE-AC05-84OR21400.

MASTER

PASSIVE SENSOR SYSTEMS FOR NUCLEAR MATERIAL MONITORING*

M. L. Simpson, L. A. Boatner, D. E. Holcomb, S. A. McElhaney,
J. T. Mihalczo, J. D. Muhs, M R. Roberts, and N. W. Hill
Oak Ridge National Laboratory†
P.O. Box 2008
Oak Ridge, TN 37831-6285 USA

ABSTRACT

Passive fiber optic sensor systems capable of confirming the presence of special nuclear materials in storage or process facilities are being developed at Oak Ridge National Laboratory (ORNL). These sensors provide completely passive, remote measurement capability. No power supplies, amplifiers, or other active components that could degrade system reliability are required at the sensor location. ORNL, through its research programs in scintillator materials, has developed a variety of materials for use in alpha-, beta-, gamma-, and neutron-sensitive scintillator detectors. In addition to sensors for measuring radiation flux, new sensor materials have been developed which are capable of measuring weight, temperature, and source location. An example of a passive sensor for temperature measurement is the combination of a thermophosphor (e.g., rare-earth activated Y_2O_3) with ^6LiF (95% ^6Li). This combination results in a new class of scintillators for thermal neutrons that absorb energy from the radiation particles and remit the energy as a light pulse, the decay rate of which, over a specified temperature range, is temperature dependent. Other passive sensors being developed include pressure-sensitive triboluminescent materials, weight-sensitive silicone rubber fibers, scintillating fibers, and other materials for gamma and neutron detection. The light from the scintillator materials of each sensor would be sent through optical fibers to a monitoring station, where the attribute quantity could be measured and compared with previously recorded emission levels. Confirmatory measurement applications of these technologies are being evaluated to reduce the effort, costs, and employee exposures associated with inventorying stockpiles of highly enriched uranium at the Oak Ridge Y-12 Plant.

INTRODUCTION

Fiber optics is an emerging technology with many inherent advantages in sensing and communication applications over conventional technology. Some of the potential advantages of optical fiber technology are greatly increased communications bandwidth, reduced mass, reduced size, ruggedness to vibration and shock, physical flexibility, high sensitivity, electrical isolation, electromagnetic interference (EMI) immunity, high-temperature resistance, reduced calibration requirements, and passive operation. Pure silica core optical fibers (particularly within the 1300 and 1550-nm communication bands) are highly radiation resistant, often not showing measurable damage for doses of several thousand Gray [1]. Conventional (for communication-type fibers) polyamide coatings survive temperatures of more than 300°C. Because of the small size and durability of optical fibers, fiber optic penetrations into storage vault areas and across pressure boundaries are no more difficult than conventional penetrations.

Fiber optic (FO) sensor technology is starting to replace conventional sensors in industries such as utilities, where measurements of pressure, temperature, fluid level, and strain are important in the presence of high EMI and radiation levels. For long-term storage of special

*The submitted manuscript has been authored by a contractor of the U.S. Government under Contract No. DE-AC05-84OR21400. Accordingly, the U.S. Government retains a paid-up, nonexclusive, irrevocable, world-wide license to publish or reproduce the published form of this contribution, prepare derivative works, distribute copies to the public, and perform publicly and display publicly, or allow others to do so, for U.S. Government purposes.

†Managed by Martin Marietta Energy Systems, Inc., for the U.S. Department of Energy under contract DE-AC05-84OR21400.

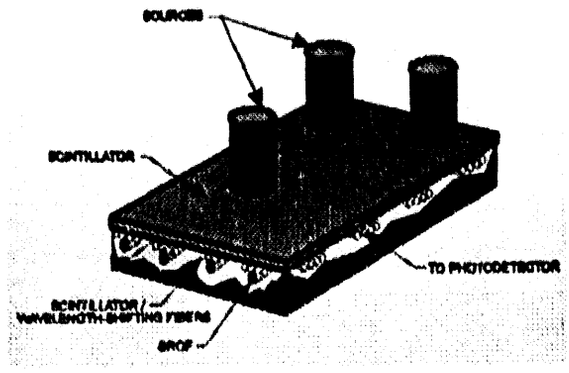

Figure 1 FO Sensor Mat Configuration

nuclear materials (SNM), however, the advantage that FO sensors hold over more conventional approaches is passive operation. With respect to SNM storage, passive operation is defined as the absence of any active components (electronics, power supplies, etc.) within the vault area. An SNM monitoring system that incorporates FO sensors will thus provide reliable, remote inventories of material attributes, reducing the frequency and intensity of physical inventories and minimizing the needs for safegaurd staffs to access a storage vault for maintenance. A plausible configuration of FO sensors for SNM monitoring is shown in Fig. 1 where the fiber sensors are embedded in a mat on which the containers of SNM would sit.

Material attributes important to SNM safeguard include temperature, weight, radiation flux, and source location (item presence). Discrete fiber sensors have been demonstrated to measure each of these material attributes [2]. However, the challenge for SNM safeguards is to reduce the resulting system complexity, measuring multiple attributes of multiple items, by integrating the sensors and providing distributed measurements. Ideally, one would like to have a single fiber to provide monitoring coverage for a vault area, because of practical limitations in existing technology, a viable passive SNM monitoring system will consist of both discrete and distributed sensors.

FO SENSORS DISCRETE FOR PASSIVE SNM MONITORING

The (DOE) Department of Energy complex in Oak Ridge, through its research programs in scintillator materials, has developed a variety of materials for use in alpha-, beta-, gamma-, and neutron-sensitive scintillator detectors [3,4]. In addition to sensors for measuring radiation flux, new sensor materials and configurations have been developed that are capable of measuring weight, temperature, and source location. In the following Section, a brief description is presented of existing FO sensor technology as well as work that is ongoing at ORNL addressing the measurement of material attributes for SNM storage.

Source Flux and Temperature

Source flux is an important attribute for monitoring high-enriched uranium (HEU), ^{233}U, low-enriched uranium (LEU), plutonium, irradiated SNM, and other nuclear materials in SNM long-term storage applications. To measure neutron or gamma flux with an FO sensor, the particle energy must first be converted to light pulses and then coupled into the fiber optic cable for transmission to the detector.

A variety of scintillator materials exists for gamma radiation (CsI, NaI(Tl), plastic scintillators, and Pb glasses) as well as for thermal neutrons (^{6}LiI, ^{6}LiF (95% Li), and plastic scintillators). Scintillator materials can be directly butt-coupled to the end of a conventional fiber optic cable or cable bundle and the resulting light pulses efficiently transmitted over hundreds of meters of cable length. Optical fiber gamma and electron beam dosimeters suitable for use in radiation therapy environments have been demonstrated [5].

Another option for monitoring source flux is scintillating optical fiber (e.g. doped Li glasses). These fibers absorb particle energy within the core of the fiber and then remit the energy as light. A portion of the light energy from a particle event is coupled into modes in the fiber and thus transmitted to the detector. The problem with these scintillating fibers is that the light is severely attenuated as it propagates down the fiber with 1/e attenuation lengths being as short as 1m. The advantage of the scintillating fibers, as discussed below, is the applicability of the fibers to distributed measurements.

For plutonium sources, a second material attribute that is important for safeguards monitoring and material controls and accounting

is temperature. FO sensors that monitor temperature are commercially available (Wickersheim, et. al. [6] successfully marketed a Xenon flash lamp fluoroptic thermometry system based on magnesium fluorogermanate activated with tetravalent manganese [$Mg_4FGeO_6(Mn)$]). These sensors have a thermographic material coated on the end of a conventional fiber. The material is illuminated with a pulsed external light source generating a fluorescence signal with a decay rate characteristic of the thermographic material's temperature. The fluorescence signal is then transmitted back through the optical fiber and is detected by a photodetector. Since the excited state lifetime is a fundamental atomic property of the thermographic material, sensors based on fluorescence decay time may not require periodic recalibration.

ORNL is currently developing a new group of FO sensors that have the potential of integrating temperature and radiation flux measurements for applications such as long-term plutonium storage [7]. The sensitive element of these FO sensors is a combination of known scintillator materials with thermographic materials. An example of one of these new scintillator materials we are investigating for the detection of thermal neutrons (940 barns thermal neutron cross section existing in plutonium storage vaults because of backscattering off of concrete) is the combination of ^6LiF (95% ^6Li) and rare-earth-activated Y_2O_3. The ^6LiF (95% ^6Li) has a high cross section for thermal neutrons. When a neutron is absorbed, an alpha and a triton particle are produced. These charged particles are then detected by the rare-earth-activated Y_2O_3, producing visible light scintillations that can be measured with an appropriate photodetector. The number of light events per unit time from the scintillator material is a direct measurement of radiation flux, and the decay rate (or ratio of different spectral emission lines) is a direct measurement of temperature. Radiation flux and temperature are thus integrated in a single sensor.

Source Weight

Another important material attribute for long-term storage of SNM is weight. A variety of FO sensors for measuring loads exists in the literature. The majority of these sensors work by measuring changes in light propagation within the fiber due to local deformation caused by an applied load. Even though these FO sensors generally require a light source (unlike the source flux FO sensors) and a detector, both active components can be located outside the vault area within easy access of safeguards personnel.

The most sensitive of these weight sensors are those based on interferometric techniques. There are two types of FO interferometric sensors applicable to weight measurement: Fabry-Perot and Mach-Zehnder [8]. Fabry-Perot strain sensors consist of an etalon located at the distal end of a single fiber optic cable. Elongation in the fiber due to an applied load(s) results in dimensional changes in the resonant cavity. The Mach-Zehnder configuration consists of two fibers (legs of the interferometer), one subject to an applied load(s) and the other, a reference. The most promising of the Mach-Zehnder FO sensors use birefringent fiber. By monitoring the interference along the fiber's slow and fast optical axes, the effects of temperature and strain can actually be decoupled [9].

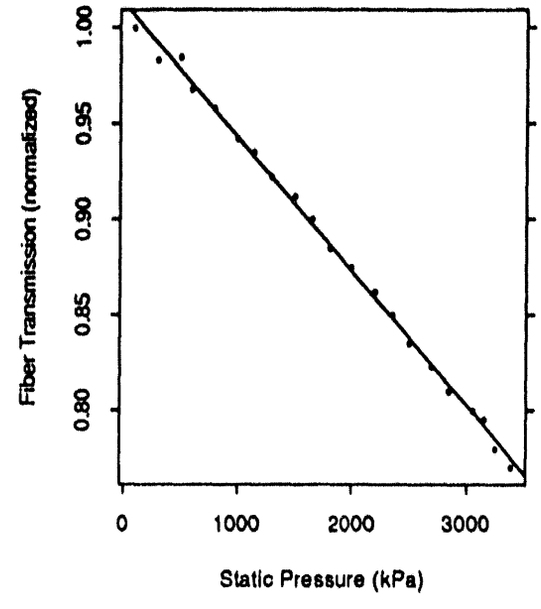

Figure 2. Silicone Fiber Pressure Response Curve

A novel, new sensor for measuring weight developed by researchers at Oak Ridge is based on silicone rubber fiber technology

[10]. Silicon rubber fiber has a 2-mm core and a 3-mm cladding and is surrounded by a thin protective buffer. The fiber is extremely flexible with a bend radius of 3cm. To measure weight, the silicon rubber fiber undergoes compression in response to an applied load. Light channeled into one end of the fiber is attenuated because of the compressed segment of fiber. Fig. 2 shows a plot of the transmission through a silicone rubber fiber as a function of static pressure. The application for which the technology was developed was a portable weigh-in-motion system to weigh vehicles. Measured accuracies were ± 3% for slow-moving vehicles under a controlled environment. For application to quantifying the weight of SNM containers, the silicone rubber fibers could be molded directly into a host material such as plastic. The major uncertainty at this point is the accuracy of the silicon rubber fiber measurements under long-term static loading (creep characteristics).

A second FO sensor for the measurement of strain being developed at ORNL is based on optical time domain reflectometry (OTDR) [11]. With OTDR, a short pulse of light is injected into an optical fiber. As the pulse reaches the distal end of the fiber, a certain portion of the energy is reflected (Fresnel reflection). The measured difference in time between the original pulse and the reflected pulse is proportional to the length of the fiber. Thus, deformation in the fiber due to an applied load can be quantified.

ORNL is currently investigating the application of reentrant loops to enhance strain sensitivity of conventional OTDR [12]. The reentrant loop uses a tapoff coupler with the taps joined to form a loop containing the section of fiber subject to an applied load(s). When a light pulse transiting the loop encounters the tapoff coupler, part of its energy is coupled to the output leg and part reenters the loop. Since the uncertainty in an OTDR measurement is constant at about ± 2ps, the reentrant loop technique essentially extends the length of time of the measurement and therefore enhances the sensitivity. Using this technique with an 850-nm source and graded-index fiber, we have recently demonstrated repeatable strain sensitivity of ~ 30-μstrains, corresponding to 50 transits around the loop.

Source Location

A final material attribute important for monitoring SNM is item presence. If discrete sensors are used, item presence can be verified from the flux, temperature, and/or weight of the respective container. However, if a reasonable number of SNM containers are present in the vault, the total monitoring system becomes quite large and expensive. The other option, discussed further below, is to introduce time division optical multiplexing, where each discrete FO sensor is monitored for a specific time slice. These types of polling systems, however, are not considered real time and therefore may not be acceptable to the safegaurds community.

One example of an alternate approach, which has been examined at ORNL, is to provide an X-Y grid of fibers, with the SNM containers located at the vertices of the grid. Scintillator material is placed under each canister, and light coupled into the fibers from particle events on a scintillator screen would provide coincident X and Y pulses indicating the location of the SNM container. This configuration reduces the number of detectors needed to monitor N^2 canisters by a factor of N/2. Coupling the light into the fiber from the scintillator material, however, is not trivial. If conventional fibers are used, light generated from particle events would simply pass through the underlying fibers

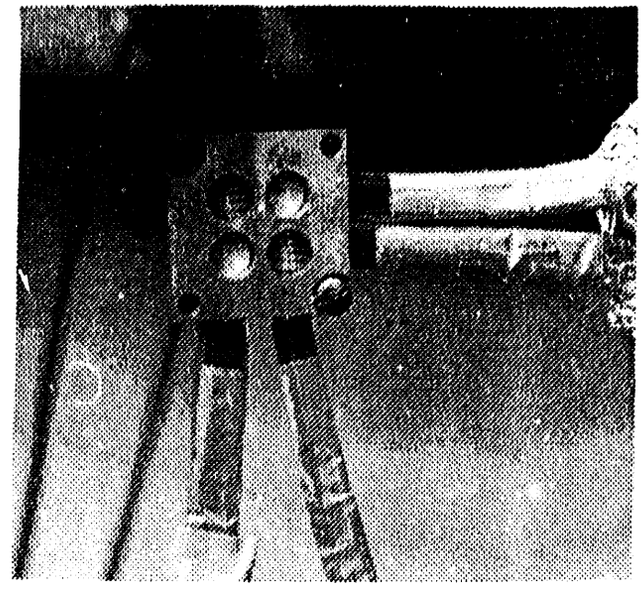

Figure 3 X-Y Fiber Position Detector

(Snell's law) and would not be coupled into transmitted modes. If wavelength-shifting fibers is used, though, blue light emitted from the scintillator screen is absorbed in the fiber and remitted as green light within the core of the fiber. A portion of the light is thus coupled into the X and Y fibers and transmitted to a detector for processing.

ORNL researchers have performed preliminary experiments with this type of concept using 2 x 2 ribbons of wavelength-shifting fibers (Fig. 3). Using buttons consisting of an alpha source embedded in ZnS(Ag), we were able to detect the location within the 2 x 2 fiber array of single or multiple buttons by coincidence detection and to display the results on a computer screen. The large hurdle in this test was coupling sufficient energy from the scintillator into the X and Y fiber ribbons to perform coincidence counting. It is uncertain at this point how many SNM containers could be monitored simultaneously with an X-Y grid. The size of the grid would ultimately be determined by the activity of the sources (probability of overlapping pulses), the signal level of the coupled energy, and the 1/e attenuation length of the fiber.

DISTRIBUTED AND INTEGRATED FO SYSTEMS FOR LONG-TERM STORAGE OF SNM

As mentioned in the introduction, the real challenges in providing reliable, cost-effective, passive monitoring for SNM safegaurds are integrating (combining) important material attribute measurements and providing distributed measurements (monitoring multiple SNM sources with the same sensor). As discussed in the previous section, applicable discrete FO sensor technology has been developed for the measurement of material attributes such as weight, temperature, source flux, and item presence. One technique for reducing the detection and processing overhead for a monitoring system consisting solely of discrete sensors is optical time division multiplexing. These types of multiplexers are commonly used in optical communication networks and essentially poll each discrete FO sensor in turn. A typical system implementation using optical multiplexing in a storage vault application is shown in Fig. 4

A limited number of distributed FO sensors have been cited in the literature. Distributed FO temperature measurements, for example, rely on the temperature-dependent

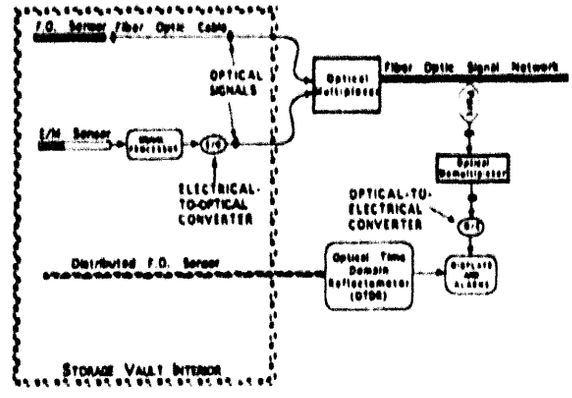

Figure 4 SNM Optical System Layout

change in the relative amounts of Stokes and anti-Stokes scattering from an incident light pulse. Stokes (and anti-Stokes) scattering is a form of Raman scattering in which the incident photon interacts with a phonon of the material lattice in which the photon is propagating. (Phonons are the localized wave packets representing lattice vibration much as photons are the localized wave packets representing electromagnetic propagation.) Raman scattering is reviewed in Kittel [13] Spatial information about temperature is obtained by injecting a short light pulse into a fiber and plotting the ratio of the Stokes to the anti-Stokes light backscattered through the fiber as a function of time. Thus the temperature of a large number of sources are able to be measured with a single sensor system.

One example of an integrated FO sensor system, presented above, which is being developed at ORNL is the neutron flux/temperature sensor. An example of a distributed system was also described for measuring item presence with an X Y grid of fibers. Although to this point it is unproven, a possible extension of these technologies for developing an integrated/distributed system for SNM storage is to provide an X Y grid of fibers, as before, but to incorporate the combined thermographic and scintillator materials as the active element. In this scenario, coincident X Y light pulses would indicate item presence, the number of pulses/time is a measure of source

flux, and the decay rate of the pulses is a measure of temperature. Other similar configurations of FO sensors are certainly possible and should also be investigated.

SUMMARY

Fiber optic sensors are an emerging technology that promise substantial benefits for SNM safegaurds. The primary advantage of FO sensors is passive operation, where no active components are present within the vault area. Passive operation greatly enhances the reliability of monitoring systems for long-term SNM storage and reduces the need for vault intervention by safegaurds staff for required system maintenance.

Discrete FO sensor technology is currently available to monitor important material attributes such as weight, source flux, temperature, and item presence. The overhead in detectors and processing equipment to implement a totally discrete FO sensor system, however, is sizable. The challenge facing the safegaurds community, to implement passive FO sensors for long-term SNM storage, is providing system designs that reduce the amount of sensors, detectors, and processing equipment required for a given vault area. In the short term, system configurations based on optical time division multiplexing will provide inventory coverage, albeit by a polling process. In order to provide a comprehensive, real-time passive monitoring system for SNM storage, however, new technology in distributed and integrated FO sensors must be developed and exploited.

REFERENCES

1. D. W. Miller, D. E. Holcomb, et al., *Radiation Effects on Optical Fibers*, TR-100367, Electric Power Research Institute, 1992.
2. D. A. Krohn, Fiber Optic Sensors, 2nd ed., Instrumentation Society of America, ISBN 0-55617-010-6, 1992.
3. S. A. McElhaney, J. A. Ramsey, M. L. Bauer, and M. M. Chiles, "A More Rugged ZnS(Ag) Alpha Scintillation Detector," *IEEE Trans. Nuc. Sci.* 37(2), 868–872 (1990).
4. M. M. Chiles, M. L. Bauer, and S. A. McElhaney, "Multi-Energy Newtron Detector for Counting Thermal Neutrons, High-Energy Neutrons, and Gamma Photons Separately," *IEEE Trans. Nuc. Sci.* 37(3), 1348–350, 1990.
5. A. S. Beddar, T. R. Mackie, and F. H. Attix, "Water-Equivalent Plastic Scintillation Detectors for High-Energy Electron Beam Dosimetry," Phys. Med. Biol. 37, (10), 1883–1913 (1992).
6. K. A. Wickersheim, S. O. Heinemann, H. N. Tran, and M. H. Sun, "Second Generation Fluoroptic Thermometer," Proc. Digitech '85, Boston, ISA paper 85-0072, pp.87–94, 1985.
7. S. A. McElhaney, D. D. Falter, R. A. Todd, M. L. Simpson, and J. T. Mihalczo, "Passive (Self-Powered) Fiber Optic Sensors," Conference Record of the IEEE Nuclear Science Symposium, Orlando, FL. pp.101–103, Oct. 25–31, 1992.
8. M. Born and E. Wolf, Principles of Optics, 6th ed., Pergamon Press, New York, pp. 312-314, 329 et. seq., 1980.
9. M. C. Hastings and B. Chiu, "Simultaneous Measurement of Strain Or Acoustic Pressure and Temperature with an Optical Fiber Interferometer," accepted for presentation and publication, SPIE Proceedings Vol 2070, Fiber Optic and Laser Sensors XI, Boston, September 7–10, 1993.
10. J. D. Muhs, "Silicone Rubber Fiber Optical Sensors," Photonics, pp. 98–102 (July 1992).
11. B. K. Garside, "Ultrahigh Resolution Optical Time Domain Reflectometry," SPIE Vol. 954, *Optical Testing and Metrology II*, pp. 670–675, 1988.
12. S. W. Kercel and J. D. Muhs, "Repeatable Sensitivity of OTDR-Based Strain Measurement," SPIE Vol. 1757, *Ultrahigh- and High-Speed Photography, Videography, and Photonics '92*, pp. 60–73, 1992.
13. Charles Kittel, Introduction to Solid State Physics, 6th ed., John Wiley and Sons, Inc., New York, p. 307, 1986.

END

DATE FILMED

12/9/93