NOTICE

CERTAIN DATA CONTAINED IN THIS DOCUMENT MAY BE DIFFICULT TO READ IN MICROFICHE PRODUCTS.

[redacted]
(CLASSIFICATION)

DECLASSIFIED

DOCUMENT NO.

HW--63351

DE93 000333

[illegible]

GENERAL ELECTRIC

HANFORD ATOMIC PRODUCTS OPERATION - RICHLAND, WASHINGTON

[redacted] ~~CONTAINS RESTRICTED~~ [redacted] ~~DEFINED IN~~ [redacted] ~~OF 1954. ITS TRANSMITT~~[redacted]~~OSURE OF ITS~~ [redacted] ~~MANNER TO AN~~ [redacted] ~~SON IS PROHIBITED.~~

☐ OTHER OFFICIAL CLASSIFIED INFORMATION

THIS MATERIAL CONTAINS INFORMATION AFFECTING THE NATIONAL DEFENSE OF THE UNITED STATES WITHIN THE MEANING OF THE ESPIONAGE LAWS, TITLE 18, U. S. C., SECS. 793 AND 794, THE TRANSMISSION OR REVELATION OF WHICH IN ANY MANNER TO AN UNAUTHORIZED PERSON IS PROHIBITED BY LAW.

TITLE

INCREASED PRODUCTION STUDY
B, D, DR, F, H AND C REACTORS

AUTHOR

N. F. Fifer
F. J. Kempf

File key #

ISSUING FILE

RECEIVED 700 AREA

MAY 2 1960

RETURN TO

TECHNICAL INFORMATION FILES

THIS DOCUMENT MUST NOT BE LEFT UNATTENDED OR WHERE AN UNAUTHORIZED PERSON MAY HAVE ACCESS TO IT. WHEN NOT IN USE, IT MUST BE STORED IN AN APPROVED LOCKED REPOSITORY WITHIN AN APPROVED GUARDED AREA. WHILE IT IS YOUR POSSESSION AND UNTIL YOU HAVE OBTAINED A SIGNED RECEIPT FROM CLASSIFIED FILES, IT IS YOUR RESPONSIBILITY TO KEEP IT AND ITS CONTENTS WITHIN THE LIMITS OF THIS PROJECT AND FROM ANY UNAUTHORIZED PERSON. ITS TRANSMITTAL TO, AND STORAGE AT YOUR PLACE OF RESIDENCE IS PROHIBITED. IT IS NOT TO BE DUPLICATED. IF ADDITIONAL COPIES ARE REQUIRED, OBTAIN THEM FROM THE RELATED ISSUING FILE. ALL PERSONS READING THIS DOCUMENT ARE REQUESTED TO SIGN IN THE SPACE PROVIDED BELOW.

ROUTE TO:	PAYROLL NO.	LOCATION	FILES ROUTE DATE	SIGNATURE AND DATE
[illegible]	962	[illegible]	5-2-60	[illegible]

[redacted]

RECORD COPY

DECLASSIFIED

Indefinite Retention ____ Disposal Date

Authority ____ Authority

C-3195-MS (7 - 55) A.E.C.-G.E.-RICHLAND, WASH.

MASTER

SEP 28 1992

[redacted]
(CLASSIFICATION)

DISTRIBUTION RESTRICTED TO U.S. ONLY

This document classified by:

H W Heacock

This Document consists of
12 Pages, No. [redacted] of
[redacted] Copies. Series [redacted]

DECLASSIFIED

INCREASED PRODUCTION STUDY
B, D, DR, F, H, and C REACTORS

April 18, 1960

Prepared By: N F Fifer
N. F. Fifer
Reactor Modification Design

Date: 4-21-60

F. J. Kempf
F. J. Kempf
Reactor Modification Design

Date: 4-21-60

Approved By: H W Heacock
H. W. Heacock, Supervisor
Reactor Modification Design

Date: 4-21-60

[redacted]

[redacted]

Classification Cancelled And Changed To
DECLASSIFIED
By Authority of RLO-CG-4
C.A. Bauman 1-7-90
by J. W. Wells 8-15-92
Verified By TL Burbridge 8-15-92

[redacted]

DECLASSIFIED

DISTRIBUTION

1. J. T. Baker
2. J. W. Baker
3. C. R. Barker
4. R. S. Bell
5. J. H. Brown
6. C. E. Bowers
7. P. A. Carlson
8. R. G. Clough
9. R. L. Dickeman
10. W. J. Ferguson
11. N. F. Fifer
12. E. J. Filip
13. J. M. Fox, Jr.
14. G. C. Fullmer
15. W. D. Gilbert
16. S. M. Graves
17. O. H. Greager
18. A. B. Greninger
19. C. N. Gross
20. H. W. Heacock
21. E. T. Hubbard
22. R. T. Jaske
23. P. C. Jerman
24. R. T. Jessen
25. F. J. Kempf
26. L. W. Lang
27. D. S. Lewis
28. T. H. Lyons
29. A. R. Maguire
30. W. S. Nechodom
31. R. Nilson
32. R. W. Reid
33. L. P. Reinig
34. W. D. Richmond
35. E. R. Rudock
36. W. Seeburger
37. R. M. Smithers
38. R. E. Trumble
39. W. W. Windsheimer
40. E. C. Wood
41. Record Center
42. 300 Files

I. INTRODUCTION

A broad study program is currently in progress in Irradiation Processing Department to evaluate the technical and economic feasibility of various methods of obtaining increased production from the six older reactors (B, D, DR, F, H, and C Reactors). Due to time limitations this study has been in general terms only, but has indicated that considerable increased plant return can be obtained from an increased conversion ratio as well as from higher reactor power levels. The work performed by this Unit has been concerned with defining the reactor process component modifications, and process piping changes between the 105 Building valve pits and effluent basins which will be required to attain the production increases.

The feasibility of overboring the process tube channels and development of equipment to accomplish overboring has been considered and documented in a preliminary report by Equipment Development Sub-Section(1).

The scope of study has encompassed process flow rates between 85,000 gpm and 150,000 gpm at a maximum bulk outlet temperature of 95° C. Process flow rates of 95,000, 105,000, and 115,000 gpm were also considered at 105°C bulk outlet temperature. Early in the study the cases associated with 105°C bulk outlet temperature were found to be impracticable due to the required technology extension and were dropped from further consideration. As the study progressed and the capabilities of the various plant additions became more clearly defined, the study emphasis shifted to cases with process flows in the range of 105,000 gpm to 115,000 gpm at a bulk outlet temperature of 95°C. These study cases considered installation of both aluminum and zirconium process tubes.

II. PURPOSE

This report has a two-fold purpose. First, the expansion study cases which currently appear to have the most incentive for further evaluation will be presented in some detail. Secondly, the required reactor alterations will be presented with a summary description of facilities, study drawings and preliminary cost estimates for the various conditions which were studied. To attain a measure of completeness those cases which considered pressurized operation to suppress effluent boiling are also included.

It is not the purpose of this report to compare the relative economic gains of the cases considered with each other or with the economic gains which may be achieved by overboring of the reactor process tubes. These comparisons will be considered in a later more comprehensive report by others.(2)

III. SUMMARY

The study drawings included in this report indicate in general the piping changes required for increased flows and bulk outlet temperatures. Flow sheets (SK-1-3812 Sheet 1 and 2) present in tabular form the recommended piping changes at particular process flow rates. Prior to the initiation of any project action on recommended reactor rear face piping replacement, an extensive data collection program must be completed. The extent of existing inadequacies, calculated overstress conditions and cavitation damage must be more clearly defined if a substantial degree of refinement is to be obtained.

DECLASSIFIED

[redacted]

The amount of development work that must be performed will depend upon the combination of reactor and water plant modifications selected as producing the greatest economic return. However, it appears that in any case, development of an acceptable process tube assembly including provision for tube expansion will be required. Development of a permanent type gas seal for application on the reactor rear face will also be beneficial.

Table I summarizes the final study cases presented for further economic analysis. Due to the large number of cases, a detailed description of each case is not presented. The equipment modifications and piping changes associated with each case are, however, indicated in the attached cost breakdown sheets (Appendix - Table I). A description of the changes necessary at particular process flow rates is included in Section IV-C of this report.

The case notation has been selected to be comparable to the numbering system used in the water plant portion of the Expansion Study (3). Cases indicated as "base" in Table I do not have associated water plant costs since these cases consider essentially existing process flow rates. The study cases are numbered I, II, III, and IV, corresponding to process flow rates of 90,000, 95,000, 105,000 and 115,000 gpm at B, D, F, DR, and H Reactors. The "A" and "B" associated with Cases III and IV denotes different top of riser pressures considered, and "Z" indicates consideration of process tube overboring. Cases IIC, IIIC, and IVC apply only to C Reactor.

The costs in Table I do not include water plant or metal handling costs. The indicated project costs may be increased by approximately $3,500,000 at B, D, F, and DR; $750,000 at H; and $850,000 at C Reactor if metal handling costs are included. These costs provide funds for charging equipment modifications, discharge area chute scrapers and additional metal storage buckets.

Provision of adequate process tube cooling in the event of a front connnector failure may require higher than existing rear header pressures. The following rear crossheader pressures were considered at the indicated flow for bulk outlet temperatures of 95° C.

Flow - GPM	Rear Header Pressure - PSIG
95,000	50
105,000	55
115,000	70

For flows to and including 105,000 gpm orifices can be installed in rear crossheaders to dissipate these pressures before reaching the downcomer; flows greater than 105,000 gpm will require pressurized downcomers and a pressure reducing station located outside the 105 Buildings.

As indicated in Table I, study cases with the subscript "1" consider possible rear header pressure requirements that may be necessary to insure back flow through process tubes in the event of a front connector failure. The indicated project costs for the remaining cases may be increased by approximately $100,000 per reactor if capital costs are desired which include orificing rear crossheaders to dissipate the extra pressure.

DECLASSIFIED

[redacted]

[redacted]

DECLASSIFIED

TABLE I
FINAL STUDY CASES - REACTOR

Bulk Outlet Temp. = 95° C

Case	Flow	Torp	Rear Header Pressure Required	Over bore	Tube Matl	Reactor Costs* Thousands of Dollars		
						B,D,F,&DR	H	C
(Base) B,D,F,DR,H	85,000	580	No	No	Al	13,050	3,450	-
(Base) at C	95,000	400	No	No	Al	-	-	1,400
IA	90,000	Costs essentially same as Case II						
II	95,000	520	No	No	Zr	27,650	7,200	-
IIC	100,000	405	No	No	Zr	-	-	5,600
IIIA	105,000	700	No	No	Zr	27,950	7,700	-
IIIB	105,000	450	No	No	Zr	27,820	7,650	-
IIIZ	105,000	450	No	Yes	Zr	35,700	-	-
IIIC	105,000	390	No	No	Zr	-	-	5,600
IVA	115,000	600	No	No	Zr	28,220	7,650	-
IVB	115,000	515	No	No	Zr	30,230	8,450	-
IVZ	115,000	405	No	Yes	Zr	36,100	-	-
IVC	115,000	380	No	No	Zr	-	-	5,675
IVA$_1$	115,000	635	Yes	No	Zr	30,720	8,450	-
IVB$_1$	115,000	550	Yes	No	Zr	32,730	9,250	-
IVZ$_1$	115,000	405	Yes	Yes	Zr	38,600	-	-
IVC$_1$	115,000	380	Yes	No	Zr	-	-	6,600

* Costs do not include funds for equipment to handle self-supported fuel elements.

IV. DISCUSSION

A. Technical Factors Effecting Feasibility

1. Many of the factors affecting the technical feasibility of the proposed process changes have been previously considered by Research and Engineering Section(4). Some of these factors are as follows:

   a. Allowable graphite temperatures and graphite contraction.
   b. The effect of enlarged outlet fitting designs on process tube instability limits.
   c. Rear crossheader pressure to insure that fuel elements do not melt in the event of a front connector failure.
   d. Fuel element design.
   e. Operational nuclear control.
   f. Total reactor control and speed of control
   g. Reactor instrumentation and more specifically, the use of the existing Panellit systems.

   Additional factors which will affect the technical feasibility of the proposed modifications are discussed below.

[redacted]

DECLASSIFIED

2. Horizontal Rod Cooling

Some of the higher power level cases may create sufficiently high control rod temperature to require corrective action. Based on data from a previous study, skin temperatures will approach 350°, at which temperature aluminum softens enough that wear may take place at an appreciable rate(5). Increased cooling capacity will be adequate to maintain rod skin temperatures sufficiently low so that a suitable rod life is achieved.

3. Biological Shield Deterioration

Increased power levels tend to increase the rate of deterioriation of the masonite, however, earlier studies have shown that rate of deterioration is primarily a function of temperature (6). It has also been demonstrated that the shield temperature can be reasonably controlled by the use of fringe poisoning(7). This method of temperature control will be utilized with compensating enrichment being determined for each loading.

4. Concrete Shield and Foundation Temperature

Based on previous work done by Reactor and Systems Design Analysis Unit(8) the maximum concrete temperature in the reactor foundations can be predicted as a function of fringe tube power level. With an estimated 500 KW for fringe tube powers, the maximum concrete temperatures would be on the order of 375° F at which temperature the concrete deterioration should not be rapid.

B. Design Basis

1. Design Assumptions

The following basic design assumptions as to feasibility of operation were made as a basis for this study.

a. Graphite

Successful operation is possible with graphite temperatures approaching 1000° C.

b. Fuel Element Design

A design for a self supported fuel element will be developed that will have a satisfactory rupture rate at goal exposures of 800 MWD/ton.

c. Reactor Foundation

Heating of the concrete foundation of the reactor will not limit power level.

d. Panellit System

The existing Panellit systems were considered to be adequate for all cases. The validity of this statement is being verified by Research and Engineering Section and recommendations for an alternate method of flow monitoring will be proposed by Equipment Development Sub-Section where necessary.

e. Effluent Activity

For all cases of 95° C bulk outlet temperature it was assumed that the effluent activity would not limit power levels.

f. Rear Crossheader Fitting Size

In general, the philosophy behind increasing rear face crossheader fitting and connector sizes has been that larger fittings and connectors are currently being successfully utilized at C and K reactors with increased hydraulic efficiency. It is realized that some low power fringe tubes at the K Reactors have, under certain circumstances, less protection from fuel element burnout than other tubes because of the K fitting sizes. In this study it has been assumed that proper design and sufficient development can provide a hydraulically acceptable fitting with safety features compatible to the Panellit system.

2. Process Variables

Throughout the study, 1800 effective flow tubes and 1500 effective power tubes have been assumed. Other process variables for the particular cases considered are indicated in tabular form in Tables I (Page 5) and II (Page 18).

DECLASSIFIED

DECLASSIFIED

3. Reactor Components

a. Fuel Element

A self-supported, aluminum jacketed, I&E fuel element will be utilized in all expansion study cases. The "base" cases consider ribbed tubes with the present I&E elements.

b. Process Tube Assembly

New nozzles, connectors and fittings will be used with smooth bore aluminum or zirconium process tubes.

c. Reactor Piping

Crossheaders, risers, and associated piping will be installed as required by the particular study case.

d. Horizontal Control Rods

The horizontal control rod coolant flow rate will be increased as required by the particular case.

e. Vertical Safety Rods

Faster acting vertical safety rods will not be required to satisfy the speed of control criteria for the study cases which consider overboring the process tube channels.

Vertical safety rod circuit modifications or faster acting rods will be provided according to particular case requirements in study cases which do not consider overboring. The new VSR's will be air accelerated to meet speed of control requirements. The required number of air accelerated rods has been estimated at one fourth the number of vertical safety rods in each reactor(9), for the worst case from a standpoint of speed of control. It has been assumed that for these rods to be effectively placed, the vertical rod channels will require straightening. Installation of additional vertical safety rod channels is not considered feasible at this time.

f. Operational Control

Operational control requirements will be met by installing supplementary control devices such as poison columns and splines.

4. Operational Charge-Discharge

Consideration of operational charge-discharge equipment was excluded from this study, however, where feasible and economic, all design changes in the process tube assembly will be compatible with OCD for ease of possible conversion at some later date.

5. Complete Reactor Discharge

For all cases it has been assumed that the reactors would be completely discharged prior to construction activity. Proper scheduling prior to full pile discharge is expected to minimize the production loss resulting from discharge of metal with low exposure.

A thorough internal decontamination and an external rear face wash should reduce the radiation level sufficiently to eliminate any personnel exposure problems with the exception of tube removal. It is believed that decontamination of the rear face of existing reactors will result in working dose rates of five to ten mr/hr(10). Retubing on a full pile basis will require a method of economically and quickly disposing of the old tubes.

C. Description of Facilities

1. Process Piping Systems

The attached study drawing SK-1-3812 presents in tabular form the process piping changes corresponding to study flows and bulk outlet temperatures. Indicated modifications at 150,000 gpm flow (Sk-1-3812, SK-1-3823, SK-1-3829) have been included for information only, since attainment of flows in this range does not appear to be technologically feasible at this time.

It should be noted that the integrity of the existing rear face piping at B, D, DR, F, and H Reactors is subject to question at present operating conditions, and that major modifications to rear face components are indicated at essentially existing flows and bulk outlet temperatures. Since rear face work to a large extent determines the length of reactor outage, other reactor changes which are required for a particular study flow can profitably be accomplished during the same outage. Overboring of reactor process tube channels will, of course, lengthen an outage beyond that time required for rear face work.

a. Front Face Piping

At B, D, and F Reactors front face piping changes are recommended at 95,000 gpm flow. These changes are shown on SK-1-3826. The modifications include replacement of crossheaders, crossheader fittings, and the addition of seven crossheaders with associated valves and strainers. The present crossheaders at B, D, and F Reactors have as many as 84 and as few as 28 crossheader fittings on an individual crossheader. This rather unusual flow distribution and the small size of existing crossheader fittings makes replacement advantageous at increased flows. The necessity for new front nozzle assemblies to accommodate self-supported fuel elements as well as gunbarrel modifications at 95,000 gpm flow provides an opportune time to eliminate the excessive pressure drop in the small crossheader fittings and provide a more acceptable flow distribution through front face crossheaders. It is proposed to supply each row of process tubes from an individual crossheader. Front face component vibration and noise problems associated with the higher process flow rates give an added incentive for accomplishing the above modifications.

[redacted]

At DR and H Reactors replacement of the existing 23 front face crossheaders with 44 crossheaders is also recommended at 95,000 gpm. Reasoning similar to that followed at B, D, and F Reactors is equally applicable at DR and H Reactors and provides the basis for the recommended modifications. At H Reactor the two existing 24 inch riser supply lines will be replaced with two 30 inch lines for flows of 105,000 gpm.

Installation of motor operated crossheader valves on front crossheaders at B, D, DR, F, and H Reactors becomes desirable when the crossheaders are replaced. Utilization of these valves will result in significant reduction of valving time during normal charge discharge outages upon resuming reactor operation. The amount of savings which can be attributed to motor operated crossheader valves at the individual reactors depends upon the power levels resulting from this expansion program and the future cost of lost production. Installation of these valves also presupposes that rear face crossunder lines are utilized.

Although C Reactor currently has small (15/32" I.D.) front crossheader fittings the incentive for enlarging these fittings is not as great as at the other reactors. C Reactor already has one crossheader per tube row on both front and rear reactor faces, and has an acceptable flow distribution. It is presumed that upon selection of the optimum study flow, modifications to front face piping at B, D, DR, F, and H Reactors will be scheduled for performance in conjunction with required rear face work. Since the amount of outage time required to make rear face changes at C Reactor will be significantly less than at the other reactors, changing front crossheaders to provide larger crossheader fittings would unnecessarily lengthen the outage.

Study cases which consider higher than existing top of riser pressures have been analyzed for required piping changes between the valve pit and the reactor front face (Case IIIA). With zirconium tube installation, no overboring, top of riser pressures of 700 psi and process flows of 105,000 gpm, some portions of the front piping will require replacement at B, D, F, DR, and H. Extensive modifications between the 190 Building and 105 Building at C Reactor would also be required if top of riser pressures in this range were considered. The attached drawings, SK-1-4087, SK-1-4088, SK-1-4089, and SK-1-4090 show the pressure ratings on existing piping components as well as the changes required for operation with 800 psi top of riser pressure.

Recommended reactor front face piping changes will be acceptable for either gravity or pressurized (105° bulk outlet) study flow conditions.

DECLASSIFIED

b. Rear Face Piping

Replacement of essentially all rear face piping components from the process tube assembly to the downcomer inlet is recommended at B, D, DR, F, and H Reactor at existing flows. Failure of rear face nozzle-to-crossheader connectors at B, D, DR, F, and H Reactors, rear risers at DR Reactor and evidence of crossheader fittings erosion at B, D, and F reactors indicates a general deterioration of rear face piping systems and that failure of these components will become more frequent until corrective action is taken(11). High fluid velocities through the tube outlet assembly not only contribute to cavitation damage, but also induce harmful vibrations. Installation of new gas seals and a sliding gunbarrel attachment is recommended at B, D, DR, F, and H Reactors to prevent future problems resulting from stuck gunbarrels. At present, solution to the stuck gunbarrel problem is a necessity only at F Reactor.

Calculations indicate that the C Reactor rear face crossheader expansion loop elbows and crossover line expansion joints are overstressed at present operating conditions. Riser support modifications and removal of crossover line expansion joints are recommended at 95,00 gpm flow(11). Installation of a sliding seal at each downcomer entrance will be required with removal of crossover line expansion joints. For bulk outlet temperatures of 105°C, the rear face process piping must be pressurized. Required changes are shown in tabular form on SK-1-3812, Sheet 2. In general, the reactor piping shown for the gravity flow study cases will be acceptable for pressurized operation. However, at B, D, F, and DR Reactors, the crossover line will be installed above the enclosed discharge area and will require special shielding. These lines have been sized to allow low fluid velocities and minimize vibration.

2. Effluent Systems

The following is a discussion of the effluent system modifications by components. The particular set of changes recommended for each case are described in more detail elsewhere(12).

a. Downcomers

The hydraulic capacity of the existing cascade type downcomers was based on work performed by the A. L. Albrook Hydraulic Laboratory at Washington State University (13 -16). The following changes are recommended for gravity flow increases to 115,000 gpm in the cascade downcomers at 105-B, D, and F. (See drawings SK-1-3842, Sheets 1 and 2, SK-1-3847, SK-1-3851, and SK-1-3856).

1) Perforate all downcomer baffles
2) Remove existing baffle vent pipes
3) Vent effluent lines adjacent to downcomer
4) Reinforce portions of the downcomer concrete walls

At the dual downcomer reactors (105-C, DR, and H) it is assumed that the two downcomers would be used simultaneously, thus no structural modifications will be necessary there. However, the possibility of retaining dual effluent paths will be given further consideration during possible scope design.

Preliminary tests indicate that in the event of complete loss of pressure to a tube, such as would result from front connector failures, considerable rear header pressures may be required to provide adequate back flow(4). If this additional rear header pressure is required, it will be necessary to install a pressurized downcomer at 115,000 gpm flow and take the pressure outside of each 105 Building to a depressurizing station. At lower flows the rear header pressure can be relieved by orificing the crossheaders.

If the rear header pressure requirement can be relaxed, the existing or modified cascade downcomers will be adequate at all areas except 105-F for the 115,000 gpm case. At F Reactor, because of the elevation of the effluent line gooseneck at the 107-F retention basin, a second downcomer will be required. The cost estimates in Table II (Page 18) for 115,000 gpm flow have been based on use of pressurized downcomers, hence the removal of the additional pressure requirement would reduce these costs by about $3,600,000 at the five older reactors and about $700,000 at C Reactor.

For all pressurized (105°C bulk outlet) flows, a new pressurized downcomer and building will be constructed outside the 105 Buildings. The existing downcomers will still be retained and utilized for shutdown flows. These changes are depicted on drawings SK-1-3814, 3816, and 3818.

b. Effluent Lines

The effluent lines discussed below are located between the 105 Buildings and the Retention Basins. The Retention Basins and remaining effluent lines to the riser are discussed elsewhere(3). The modifications for the dual reactor areas are based on the effluent lines for each reactor being able to handle the operating flow plus a 10,000 gpm shutdown flow from the adjacent reactor.

Gravity Flows

It was assumed that the reactors (C, DR, and H)having two downcomers and parallel effluent lines would use them simultaneously.

B-Area (SK-1-3842 Sheets 1 and 2)

No changes are necessary for reactor flows up to 115,000 gpm.

C-Area (SK-1-3842, Sheets 1 and 2)

The diversion box at the 107-C basins will be modified by raising the weirs and top and replacing the five foot sluice gate with a six foot gate at flows of 105,000 gpm and above.

[redacted]

DECLASSIFIED

D-Area (SK-1-3847)

At D Area the crossover boxes must be raised three feet to handle 95,000 gpm reactor flow. At 105,000 and 115,000 gpm flows it is necessary to add a 48 inch line between the crossover box and the 107-D basin.

DR-Area (SK-1-3847)

No changes are necessary for reactor flows up to 115,000 gpm.

F-Area (SK-1-3851)

At F Area the discharge box at the 107-F basin should be covered for flows of 105,000 and 115,000 gpm. If the rear face pressure requirement is relaxed, a second downcomer is required for 115,000 gpm flow and the downcomer will be tied into the existing effluent line by a new 350 foot section of sixty inch line.

H-Area (SK-1-3856)

No changes are required for flows to and including 115,000 gpm.

Pressurized Flows

At each reactor one existing effluent line would be converted to pressurized service. Pressurization of junction boxes, welding of dresser joints, addition of pressurized expansion joints and addition of energy dissipators at the 107 basins are changes typical of those required at all areas.

c. Energy Dissipators

Gravity Flows

At 115,000 gpm reactor flows the rear crossheader pressure requirement exceeds that possible from header orificing. Drawing SK-1-3819 shows an arrangement of throttling valves which would be located close to the new downcomer. In the event the rear pressure requirement is removed, this unit would no longer be needed.

Pressurized Flows

A depressurization station designed for operation with reactor bulk outlet temperatures above 100°C is shown on Drawing SK-1-3841. Untreated river water at rates up to 30,000 gpm would be used to reduce the bulk temperature to 95°C to prevent flashing when the pressure is reduced to atmospheric.

Assuming a failure of quench water, the reactor would be shut down but steam would be generated temporarily in the flash chamber and discharged up the short stack. Steam discharge would continue for one to two minutes, the time required to discharge the 105°C water in a long effluent line.

DECLASSIFIED

Considering the high transient rate of steam relase such a station would be located near the 107 basin.

With either type of pressure reducing station, a new pressurized downcomer would be required on the reactor. Upstream pressure would be maintained by a battery of flash flow type reducing valves that can handle a high pressure drop under flashing temperatures without damage to the valve. These valves would be controlled by upstream pressure during reactor operation and by level control in the top of the downcomer pipe during reactor shutdown operation.

3. Process Tube Assembly

For "base" study cases (85,000 gpm process flow) at all reactors except 105-C, the process tubes, gas seals, rear nozzles, and connectors, RTDs, thermocouples and leads would be replaced. Attachments to alleviate stuck gunbarrel problems would be installed on the reactor rear face. The front nozzles and connectors would be retained. At C Reactor with 95,000 gpm process flow only the process tube will be replaced since replacement of thermocouples and leads is presently being completed and crossheader replacement is not anticipated.

Installation of self-supported fuel elements with zirconium tubes at process flow rates of either 90,000 gpm or 95,000 gpm necessitates replacement of existing nozzle assemblies at all reactors. Replacement of rear crossheaders, where required, with those having larger connector fittings also dictates a change of rear nozzles. The minimum flow restriction in the rear face tube assembly will then be maintained at the crossheader connector fitting. The proposed header to header fittings (See Figures 1, 2, 3, and 4) in general meet the requirements of an acceptable assembly and are described in detail elsewhere(17).

The front nozzle proposed for further testing is an aluminum casting incorporating a curved flow path and a check valve as shown in some detail in Figures 1 and 3. In an attempt to eliminate the possibility of a front connector failure, this design utilizes a short connector-venturi combination which cannot be removed unless the nozzle is removed. The flapper valve provides a quick means for opening the tube for charging and is compatable with automatic charge-discharge operations. End caps can be used with this nozzle.

The rear nozzle assembly used for obtaining cost estimates, (See Figures 2 and 4) consists of a mounting flange, connector with ball joints, and a crossheader adapter. The nozzle is similar to present nozzles except that it has an enlarged smooth flow path to the connector and is jointed to the connector by a ball swivel joint similar to a Barco joint. The other end of the connector is also a ball joint which fits in a clamp that slides in and out of the crossheader adapter. Although this design allows a large degree of freedom of movement and ease of "O" ring replacement, sliding "O" ring use on rear face components have not proven satisfactory to date. The header adapter contains a removable orifice for control of cavitation and can be changed as tube flows change. A cap like those presently in service can be used on the nozzle; however, it is possible that a remote opening cap will be in service by the time this equipment may be installed. The remote opening caps can be attached to these nozzles. Both front and rear nozzles are shown attached to Russell Sleeves to allow for process tube expansion and contraction. Some reliable provision for process tube movement is mandatory for all cases.

4. Reactor Instrumentation

New thermocouples and thermocouple leads extending from the rear face instrument ducts to the temperature sensing elements are proposed in conjunction with rear nozzle assembly changes. Replacement is recommended as an economically more attractive alternate than trying to salvage existing thermocouples. The existing zone temperature monitor systems will be utilized, although the resistance temperature detectors and leads will also be replaced when rear nozzle assemblies are changed. The existing panellit gages will be recalibrated when either front or rear process tube assembly or piping changes are accomplished. New graphite stringers will be installed in conjunction with tube replacement at each reactor.

5. Vertical Safety Rods

The time required for the vertical rods to reach the point of ninety percent nuclear control from a Panellit trip varies from rod to rod at a particular reactor and also between reactors, the latter being due to differences in VSR circuitry. Based on a limited amount of test data, the time required to attain ninety percent control has been taken typically as 3.0 seconds at B, D, and F and 2.6 seconds at DR, H, and C reactors for a rod that does not "stick" during insertion. Air accelerated rods can be inserted in about 1.0 second including circuit delays.

Study cases for B, D, F, and DR Reactors which consider greater than 95,000 gpm process flow rates without overboring of process tubes require increased speed of control. In this study the first alternate considered involves increasing the rod speed at B, D, and F reactors to attain the same insertion time as at DR, H, and C Reactors. This will be accomplished by modifying VSR circuits at B, D, and F reactors. However, it must be noted that additional measurements of existing rod insertion time must be made to insure that these circuit modifications will increase the rod speed to 2.6 seconds.

The existing vertical safety rod control circuits are essentially normally closed (energized) circuits. Two relays operating in parallel are de-energized upon opening of any one of a number of monitoring device contacts initiating a signal to release the vertical rods for insertion into the reactor. The two relays monitoring the safety circuit are identified as IXX and IXXA.

DECLASSIFIED

Contacts from each of these two relays open a vertical safety rod control circuit, which in turn de-energizes a vertical rod holding clutch or latching mechanism, thereby releasing the rod. B, D, and F reactors have A-C sixty cycle control voltage for the safety and vertical rod control power source. In these areas the IXX and IXXA relays have a seventeen cycle time delay requirement to prevent the safety circuit from releasing on A-C voltage fluctuations. All other reactors are supplied with a D-C battery power source, and in these areas the IXX and IXXA relays are instantaneous in their operation(18).

B, D, and F Reactors will be converted to D-C battery control power thereby eliminating the 17 cycle time delay on the IXX and IXXA safety circuit relays. The length of time for VSRs to attain 90 percent control at B, D, and F should then be about 2.6 seconds or essentially the same as at DR, H, and C Reactors.

Further increase in speed of control can be accomplished when required by converting existing VSRs to air accelerated operation. The development work necessary to provide an acceptable accelerated rod assembly has been essentially completed under Project CG-709. However, considerable additional work may be required to insure proper operation of these rods in the B, D, and F Reactors. Currently there are 11 segmented or "Knuckle" rods at F, eight at D, and two at B Reactor. These rods are all located on the reactor far side and were installed primarily because the VSR channels were distorted sufficiently from graphite growth to prevent gravity drop insertion of one piece rods. Vertical rod channel traverses taken in 1948 indicated horizontal distortion of from three to four inches in some channels. Operation of these reactors at the higher power levels prevalent since 1948 has presumably halted the graphite growth phenomena and in fact, brought about graphite contraction. The rod channels may therefore currently be straight enough to allow air accelerated rod insertion. Prior to installation of air accelerated rods the current extent of channel distortion must be determined and also whether or not significant cumulative damage to graphite results from repeated air accelerated rod insertion.

If the cumulative damage to the graphite is no more for the air operated VSR than the winch operated VSR, the two assemblies can be considered equal because many VSRs currently have to operate in distorted channels. Tests have been run to determine the graphite damage when an air accelerated rod is inserted in 1) a distorted channel and, 2) a channel narrowed to the OD of the rod (19). In both cases, the rod operated satisfactorily with only minor chipping of the graphite blocks. However, the limited test data and the difference between test and in-reactor conditions does not permit a comparison of damage. It should be noted that the air accelerated rod is reasonably flexible and has a tapered nose. These features will help to keep graphite damage to a minimum.

DECLASSIFIED

6. Ball 3-X Systems

The present Ball 3-X systems will provide adequate control backup when used with the additional poison column control facilities for the study cases currently being considered.

Replacement of existing steel balls with balls composed of ceramic material will not be required(20), although certain features possessed by ceramic balls are desirable. Some advantages of ceramic balls are the lower density which makes vacuum removal easier and faster burn out when balls become stuck in the reactor.

7. Horizontal Control Rods

Replacement of existing horizontal control rods with NPR type rods has been considered briefly as a method of increasing speed of control. While NPR type rods can be inserted in about 1.7 second compared to a maximum speed of 40 second at the old reactors, there are several limitations to this alternate. The amount of additional control obtainable with the faster rods is largely dependent on the length of rod not being utilized for control at any particular time. The location of VSR channels and cost of providing new horizontal rod channel appears to limit installation of NPR type rods on the reactor near side, to the existing horizontal channels. The existing pattern of HCRs is somewhat restrictive when considering speed of control requirements. The cost of replacing existing HCRs with NPR type rods would be approximately $4,155,000 for B, D, F, DR, H, and C Reactors. Installation of NPR type rods on the reactor far side, opposite and slightly above the existing HCR pattern, would provide greater control of side to side heat cycling but add relatively little control of front to rear heat cycling. Additional rod installation would require approximately $6,900,000 for the six reactors for duplicating the existing HCR pattern on the reactor far side. Replacement of existing horizontal control rods with NPR type rods is not considered adviseable at this time.

D. Early Study Cases

Table II presents a summary of the study cases which were originally considered and also indicates preliminary cost estimates for each case. These costs were refined somewhat in later study cases. The cost estimates in Table II include water plant modifications and an early estimate of funds required for metal handling equipment. Information developed by the study subsequent to preparation of Table II showed that it would be adviseable to indicate H reactor costs separate from B, D, F, and DR reactor costs in the final cost summary. Table II is included primarily to indicate the relative capital costs between operation at 95° C and 105° C bulk outlet temperatures.

DECLASSIFIED

[redacted]

DECLASSIFIED

TABLE II
ORIGINAL STUDY CASES

Case	Flow (GPM)	Outlet Temp.(°C)	TORP (PSI)	Rear Header Pressure (PSI)	Overbore B,D,F,&DR	Tube Matl	*Cost in Thousands of Dollars B,D,F,DR,H	C
0	85,000	95	580	40	No	Al	16,600	
						Zr	29,600	
I	95,000	95	510	50	Yes	Al	40,000	1,800
						Zr	53,000	4,350
		105	510		Yes	Zr	61,500	8,800
II	105,000	95	450	55	Yes	Al	50,000	5,100
						Zr	63,000	7,600
		105	450		Yes	Zr	72,000	10,100
III	115,000	95	350	70	Yes	Al	57,500	6,900
						Zr	70,500	9,500
		105	350		Yes	Zr	76,700	11,600

* These costs include preliminary water plant costs for case I, II, and II and also an early estimate of funds to provide for metal handling.

E. Development Programs

Successful design of the necessary reactor modifications upon selection of the optimum study case will require an extension or extrapolation of existing technology. This section presents a discussion of some of the problems affecting reactor design which will require initiation of development programs.

1. Process Tube Assembly

It appears that production gains may be attained by increasing the size of the outmoded outlet fittings at B, D, DR, F, and H Reactors. However, development work is essential to the design of a hydraulically acceptable process tube assembly.

It should be kept in mind that changing the outlet fittings will effect tube power limits and outlet water temperature limits at the older reactors. The present fittings cause some degree of pressurization to suppress boiling on the fuel charge and also cause dual panellit trip protection for certain flow changes and for power surges. Englargement of the outlet fittings could actually reduce the outlet temperature limits. The seriousness of these effects must be known and carefully analyzed before a final selection of enlarged outlet fittings is made(21).

In addition to determining the effects of enlarged outlet fittings, extensive tests must be performed to assure the adequacy of the proposed front and rear nozzles and connectors. Emphasis must be placed on accurately defining the conditions under which the present flow monitoring system fails to function as required. Reactor flow characteristics with the new process tube assembly must also be known for proper fuel element design.

2. Gas Seals

Past efforts to develop flexible radiation and temperature resistant gas seals have resulted in a silicone rubber boot for use on the rear face. These seals are easily installed and have an estimated life expectancy of five years. About thirty boot type seals have been installed on B Reactor for the past year and appear to be satisfactory. Other reactors also have varying numbers of these boots in service.

Development should continue, with efforts directed toward obtaining a permanent type gas seal. An integral unit providing both an acceptable metallic gas seal and an attachment to allow process tube expansion would be especially beneficial.

3. Process Tube Expansion

Corrosion buildup between the rear gunbarrels, donuts, and cast iron blocks has become so severe that approximately 85 percent of the rear gunbarrels in the bottom half of F Reactor have become stuck. As a direct result of this sticking, process tubes are no longer allowed to expand and contract freely, and the Van Stone flange on the process tube is stressed. Repeated cycling under these axial load conditions eventually leads to fatigue failure of the flange(22). Although the magnitude of this problem is greatest at F Reactor, it is expected to become more severe at the other reactors unless corrective action is taken. Installation of zirconium tubes will essentially eliminate problems resulting from water leaks if adequate provision is made for process tube expansion. The amount of expansion that must be provided for zirconium tubes is approximately 1/5 of that required by aluminum tubes. Development work has been expended on the problem of aluminum tube expansion in the past, however, most solutions to date are quite expensive. The least costly attachment (Russell Sleeve) has been used in this study as a possible solution to stuck gunbarrel problems. Additional development efforts can profitably be spent to obtain an attachment which does not utilize "O-Rings" since replacement of these rings on a Russell Sleeve attached to a zirconium tube would require tube replacement. Since the thermal expansion of zirconium is so much less than that of aluminum, the possibility of allowing the reactor shield to move with tube expansion should also be considered.

DECLASSIFIED

4. Rear Crossheader Orificing and Pressure Reducing Station

High rear crossheader pressures may be required to provide adequate back flow in the event of a front connector failure. Considerable development work will be required to determine optimum orifice spacing in rear crossheaders and the magnitude and severity of resulting vibrations at flows up to and including 105,000 gpm. For flows greater than 105,000 gpm a pressurized downcomer and depressurization station will be required at each reactor. The depressurization station will dissipate the high rear crossheader pressures and allow the existing effluent systems to be utilized at 115,000 gpm flow. Some development will be required on the pressure reducing station to properly size the valves and obtain an optimum arrangement.

5. Vertical Safety Rods

For non-overbore cases with zirconium tubes, VSR modifications are dependent upon fuel element size and active zone pressure drop. The first modification will require increasing the vertical rod speed to 2.6 seconds total insertion plus circuit delay time, at B, D, and F reactors. Additional measurements of existing rod insertion time must be made to insure that the proposed circuit changes will sufficiently increase the rod speed.

For study cases which require faster than 2.6 second rod insertion, air accelerated rods will be installed. Development work will be required, first to determine accurately the extent of existing vertical rod channel distortion and secondly, to obtain a method of straightening these channels as much as possible without shearing the graphite keys which hold the vertical channel liner blocks.

If the channels must be broached or reamed to allow accelerated rod operation, additional problems are encountered. The channels after broaching will still not be perfectly straight. It is known that sufficient forces can be transmitted to the vertical channel liner blocks, during removal of adjacent process tubes, to break these blocks. Pieces of broken liner block can protrude into the rod channel and prevent complete rod insertion. Straightening rod channels may require applied loading sufficient to shear the keys holding the liner blocks in place unless special procedures are followed. When these keys are sheared there remains no restraint to keep front and rear layers of graphite around the VSR channel from protruding or sliding into the rod opening. The obvious solution to this problem would be installation of a liner to provide a smooth surface for rod travel and also protect the graphite from possible damage incurred by accelerated rod impact. However, installation of a liner does not appear practicable. Ceramic liners are unacceptable because of the extremely thin wall required and brittle fracture that could result from rod impact, or from dropping a rod in a channel full of 3X balls. Metallic liners with good nuclear characteristics such as zircaloy are unacceptable because of the temperatures encountered (760°C) and corrosive action of CO_2 on this metal.

DECLASSIFIED [redacted]

Stainless steels at these temperatures could become brittle and unacceptable from a strength standpoint in addition to their undesirable nuclear properties. The higher neutron capture cross section of stainless steel would reduce the effectiveness of both VSRs and the Ball 3X systems and would in all probability require enrichment of vertical tube rows adjacent each VSR channel to offset the poisoning effect of the liners.

Space restrictions and the necessity for 3X balls to flow around an inserted rod require any metallic liner to be in contact with the graphite. Cooling such a liner would require removal of heat from the graphite surrounding each liner. Water cooling is unacceptable due to the rod shadowing which would result and gas cooling requires prohibitive volume flow rates.

Additional testing will also be required to determine more accurately the effect of rod acceleration in slightly distorted channels.

6. <u>Rear Face Piping</u>

Prior to any project action regarding the recommended rear face piping changes, an extensive data collection program must be completed. Data on rear face piping motion, crossheader fitting damage, and actual thermal induced stress levels must be obtained. The following is a list of the proposed test work that should be programmed:

a. Rear riser motion and strain measurements

b. Crossheader expansion measurements

c. Extensive inspection of rear crossheader fittings and analysis of cavitation damage.

d. Material evaluation of an existing rear crossheader.

e. Crossheader, riser and crossover line boiling and flow stability studies.

f. Instrumentation of C, H and either B, D, F, or DR to give up-to-date pressure drop data of individual rear face piping components.

g. Additional rear face vibration measurements.

The above tests will provide a basis for future project action. Although more detailed study and development programs will be necessary to fully define various problem areas, it appears that these problems can be solved with the application of sufficient engineering effort.

DECLASSIFIED

[redacted]

REFERENCES

1. HW-62167 - Interim Report No. 1 - Graphite Overboring Study - C.W. Botsford October 6, 1959 - SECRET

2. HW-64463 - Increased Production Capacity for Six Older Hanford Reactors C. R. Barker - SECRET

3. HW-64458 - Water Plant Modifications for Increased Production - L. B. Brinkman J. P. Corley - SECRET

4. HW-62951 - Plant Expansion Task Force - Technical Feasibility and R&D Efforts W. D. Gilbert - December 29, 1959 - SECRET

5. HW-40837 - Adaptation of a Recirculating Water System to 100-H Area - H. W. Heacock - January 9, 1956 - SECRET

6. HW-35202 - Hanford Shield Masonite Deterioration Studies-L. A. Wilson-8/8/55

7. HW-48337 - Reducing Side Shield Temperature by Fringe Poisoning-W. L. Bunch April 15, 1957

8. HW-57115 - Bottom Shield Temperature for B, D, and F Reactors - D. E. Sebade September 11, 1958.

9. Personal Communication - R. Nilson - February 22, 1960

10. Letter - W. D. Gilbert to C.R. Barker - February 4, 1960

11. HW-63350 - Budget Study Report - Replacement of Rear Face Hardware at B, D, F, DR, H Reactors and Riser Support Modifications at C Reactor F. J. Kempf - January 25, 1960 - SECRET

12. HW-63487 - Piping Changes for Increased Production at B, D, DR, F, C, and H Reactors - G. H. Bauer, et.al., January 22, 1960 - SECRET

13. GEH-24162- Hydraulic Model Study of 100-F Downcomer and Effluent System Contract No. DDR-41 - Work Phase I

14. GEH-24387- Hydraulic Model Study of 100-F Downcomer and Effluent System Work Phase II

15. GEH-24477- Supplemental Report on 100-F Downcomer and Effluent System

16. GEH-24522- Hydraulic Model Studies 100-DR and 100-F Downcomers - Supplemental Contract No. 3 - DDR-41

17. HW-63343 - Expansion Study - Header to Header Fittings - P. B. McCarthy January 5, 1950 - UNCLASSIFIED

DECLASSIFIED

18. HW-43821 - Vertical Safety Rod Circuitry Improvement Report - W. R. Thorson
October 4, 1956 - UNCLASSIFIED

19. HW-60114 - Summary Report of Development Program for Vertical Safety Rod
Improvements - All Reactors - G. E. Wade - May 5, 1959 - CONFIDENTIAL

20. HW-63924 - Reactor Hazards Review - Zirconium Retubing of Hanford Reactors
R. Nilson - February 15, 1960 - SECRET

21. HW-63756 - Laboratory Determination of Normal Operating Flow Rates with
Enlarged Outlet Fittings - B, D, F, Reactors - E. D. Waters
February 2, 1960 - CONFIDENTIAL-UNDOCUMENTED

22. HW-61988 - Production Test IP-286-I - Testing of Gunbarrel Attachments at
F Reactor - A. Russel - September 21, 1959 - UNCLASSIFIED

APPENDIX
COST BREAKDOWN FOR TABLE I - FINAL STUDY CASES
(Cost in Thousands of Dollars)

BASE CASE - 105 B, D, F, DR, and H

Feature	B, D, F, DR	H
Process Tube Assembly		
Nozzles, Seals, Front Venturi, Pigtails and "Y" Connectors	1,020	255
Retubing - Al.	1,120	280
Russell Sleeves	620	155
Rear Face Piping		
Crossheaders	740	185
Riser & Crossunder	740	185
Crossover	370	145
Miscellaneous	45	10
Instrumentation		
Panellit Gage Recalibration	140	35
Graphite Stringers	120	30
Termocouple & R.T.D. Leads	380	95
Electrical Modification	120	30
Misc. Items - not detailed	100	25
Development	240	60
Temporary Construction	200	50
Decontamination	200	50
A.T.P.'s	100	25
Sub-Total	6,255	1,615
Construction Overheads	1,745	485
Total Direct Cost	8,000	2,100
Construction Engineering	280	70
Contingency	2,450	650
Escalation	625	175
General Overhead	475	125
Management Services	370	80
Design	850	250
TOTAL PROJECT COST	13,050	3,450

DECLASSIFIED

[redacted]

DECLASSIFIED

CASE II - FINAL STUDY CASES
GRAVITY FLOW - 105-B, D, F, DR, H and C

(Cost in Thousands of Dollars)

	B, D, F, & DR	H	(Base Case) C-(Al.)
Process Tube Assembly			
Front & Rear Nozzles & Caps	620	155	--
Venturi Connector Assembly	400	100	--
Orifice and Rear Connector Assembly	420	105	--
Gunbarrel Modification (F&R)	1,200	300	--
Gas Seals (F&R)	155	50	--
Retube - (Zr. Tubes)	8,240	2,060	--
Retube - Al.	--	--	325
Front Face Piping			
Crossheaders	1,155	330	--
Front Face Valve Operators	240	60	--
Rear Face Piping			
Crossheaders	740	185	--
Riser and Crossunder Lines	720	180	--
Crossover Lines	370	145	75
Riser Support Modification	--	--	25
Effluent System			
Effluent Line Modifications	100	--	--
Reactor Instrumentation & Electrical			
Panellit Gage Recalibration	140	35	--
Graphite Stringer	120	30	30
Electrical Modifications	120	30	30
Misc. Items	100	25	25
RTD and Thermocouple Leads	380	95	--
Miscellaneous Work Items			
Temporary Construction	200	50	50
Decontamination	200	50	50
ATPs	200	50	50
Sub-Total	15,820	4,035	660
Construction Overheads	2,330	615	190
Total Direct Cost	18,150	4,650	850
Construction Engineering	400	125	50
Contingency	5,500	1,400	255
Escalation	1,100	280	65
General Overhead	1,000	295	50
Management Services	500	150	60
Design	1,000	300	70
TOTAL PROJECT COST	27,650	7,200	1,400

[redacted]

CASE III - FINAL STUDY CASES
GRAVITY FLOW-105 B, D, F, DR, H and C
(Cost in Thousands of Dollars)

	B, D, F, & DR	H	C
Process Tube Assembly			
Front & Rear Nozzles & Caps	620	155	155
Venturi Connector Assembly	400	100	100
Orifice & Rear Connector Assembly	420	105	105
Gunbarrel Modifications	1,200	300	300
Gas Seals	155	50	50
Retube - (Zr.)	8,240	2,060	2,060
Front Face Piping			
Crossheaders	1,155	330	--
Valve Pit to Riser Piping	--	285	--
Front Face Valve Operators	240	60	--
Rear Face Piping			
Crossheaders	740	185	--
Riser & Crossunder Lines	720	180	--
Crossover Lines	370	145	75
Riser Support Modification	--	--	25
Effluent System			
Effluent Line Modifications	150	--	35
Reactor Instrumentation & Electrical			
Panellit Gage Recalibration	140	35	35
Graphite Stringers	120	30	30
Electrical Modifications	120	30	30
Misc. Items	100	25	25
RTD and Thermocouple Leads	380	95	--
Miscellaneous Work Items			
Temporary Construction	200	50	50
Decontamination	200	50	50
ATPs	200	50	50
Sub-Total	15,870	4,320	3,175
Construction Overheads	2,330	630	475
Total Direct Cost	18,200	4,950	3,650
Construction Engineering	400	130	90
Contingency	5,500	1,500	1,080
Escalation	1,100	300	215
General Overhead	1,000	320	200
Management Services	500	150	110
Design	1,000	300	255
TOTAL PROJECT COST	27,700	7,650	5,600
Other Project Costs			
Front Face Piping	250	50	--
VSR Circuit Modif. (BDF Only)	120	--	--
Overboring	8,000	--	--

ASSIFIED

[redacted]

DECLASSIFIED

CASE IV - WITHOUT REAR HEADER PRESSURE
GRAVITY FLOW 105-B, D, F, DR, H, C
(Cost in Thousands of Dollars)

	B, L, F, & DR	H	C
Process Tube Assembly			
Front and Rear Nozzles & Caps	620	155	155
Venturi Connector Assembly	400	100	100
Orifice and Rear Connector Assembly	420	105	105
Gunbarrel Modifications	1,200	300	300
Gas Seals	155	50	50
Re-Tube (zr.)	8,240	2,060	2,060
Front Face Piping			
Crossheaders	1,155	330	--
Valve Pit to Riser Piping	--	285	--
Front Face Valve Operators	240	60	--
Rear Face Piping			
Crossheaders	740	185	--
Riser and Crossunder Lines	720	180	--
Crossover Lines	370	145	75
Riser Support Modification	--	--	25
Effluent System			
Effluent Line Modifications	340	--	35
Reactor Instrumentation & Electrical			
Panellit Gage Recalibration	140	35	35
Graphite Stringers	120	30	30
Electrical Modifications	120	30	30
Misc. Items	100	25	25
RTD & Thermocouple Leads	380	95	--
Misc. Work Items			
Temporary Construction	200	50	50
Decontamination	200	50	50
ATPs	200	50	50
Sub-Total	16,060	4,320	3,175
Construction Overheads	2,400	630	500
Total Direct Cost	18,460	4,950	3,675
Construction Engineering	400	130	100
Contingency	5,540	1,500	1,100
Escalation	1,100	300	200
General Overhead	1,050	320	205
Management Services	500	150	120
Design	1,050	300	275
TOTAL PROJECT COST	28,100	7,650	5,675
Other Project Costs			
VSR Circuit Modif. (BDF Only)	120	--	--
Air Accelerated Rods (44)	2,130	800	--
Overboring	8,000	2,000	[redacted]

[redacted]

CASE IV - WITH REAR HEADER PRESSURE GRAVITY FLOW-105-B, D, F, DR, H and C

(Cost in Thousands of Dollars)

	B, D, F, & DR	H	C
Process Tube Assembly			
Front & Rear Nozzles and Caps	620	155	155
Venturi Connector Assembly	400	100	100
Orifice and Rear Connector Assembly	420	105	105
Gunbarrel Modifications	1,200	300	300
Gas Seals	155	50	50
Retube (Zr.)	8,240	2,060	2,060
Front Face Piping			
Crossheaders	1,155	330	--
Valve Pit to Riser Piping	--	285	--
Front Face Valve Operators	240	60	--
Rear Face Piping			
Crossheaders	740	185	--
Riser & Crossunder Lines	720	180	--
Crossover Lines	370	145	75
Riser Support Modification	--	--	25
Effluent System			
Pressurized Downcomer	660	165	165
Depressurization Station	1,140	285	285
Effluent Line Modification	60	--	35
Reactor Instrumentation & Elect.			
Panellit Gage Recalibration	140	35	35
Graphite Stringers	120	30	30
Electrical Modifications	120	30	30
Misc. Items	100	25	25
RTD & Thermocouple Leads	380	95	95
Miscellaneous Work Items			
Temporary Construction	200	50	50
Decontamination	200	50	50
ATPs	200	50	50
Sub-Total	17,580	4,770	3,720
Construction Overheads	2,620	730	555
TOTAL DIRECT COST	20,200	5,500	4,275
Construction Engineering	950	150	110
Contingency	6,000	1,650	1,300
Escalation	1,200	325	240
General Overhead	1,100	300	240
Management Services	550	175	135
Design	1,100	350	300
TOTAL PROJECT COST	30,600	8,450	6,600
Other Project Cost			
VSR Circuit Modif. (BDF Only)	120	--	--
VSR Air Accelerated rods (44)	2,130	800	--
Overboring	8,000	--	--

DECLASSIFIED

[redacted]

DECLASSIFIED

STUDY DRAWINGS

[redacted]

STUDY DRAWINGS (continued)

DECLASSIFIED

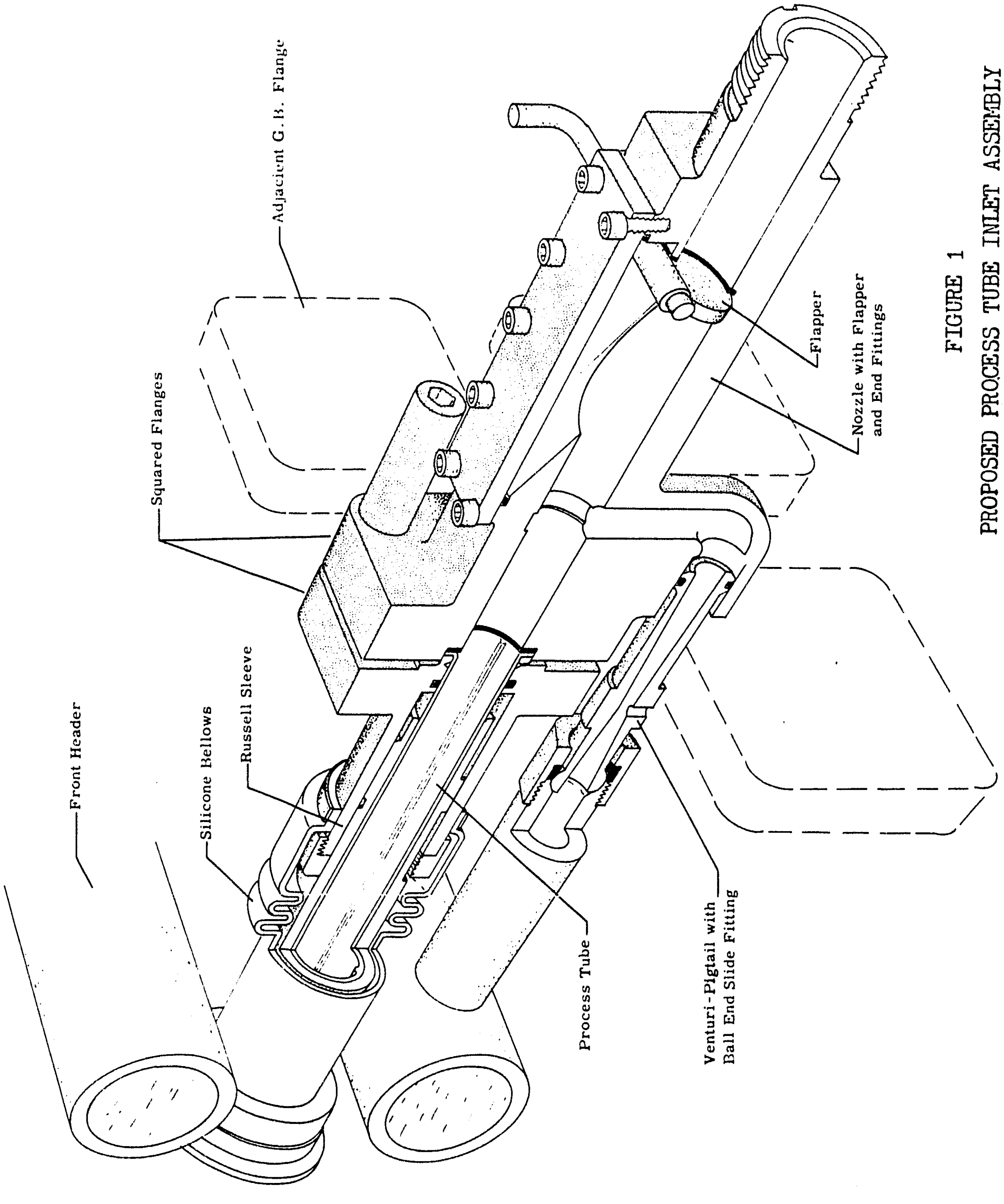

FIGURE 1
PROPOSED PROCESS TUBE INLET ASSEMBLY

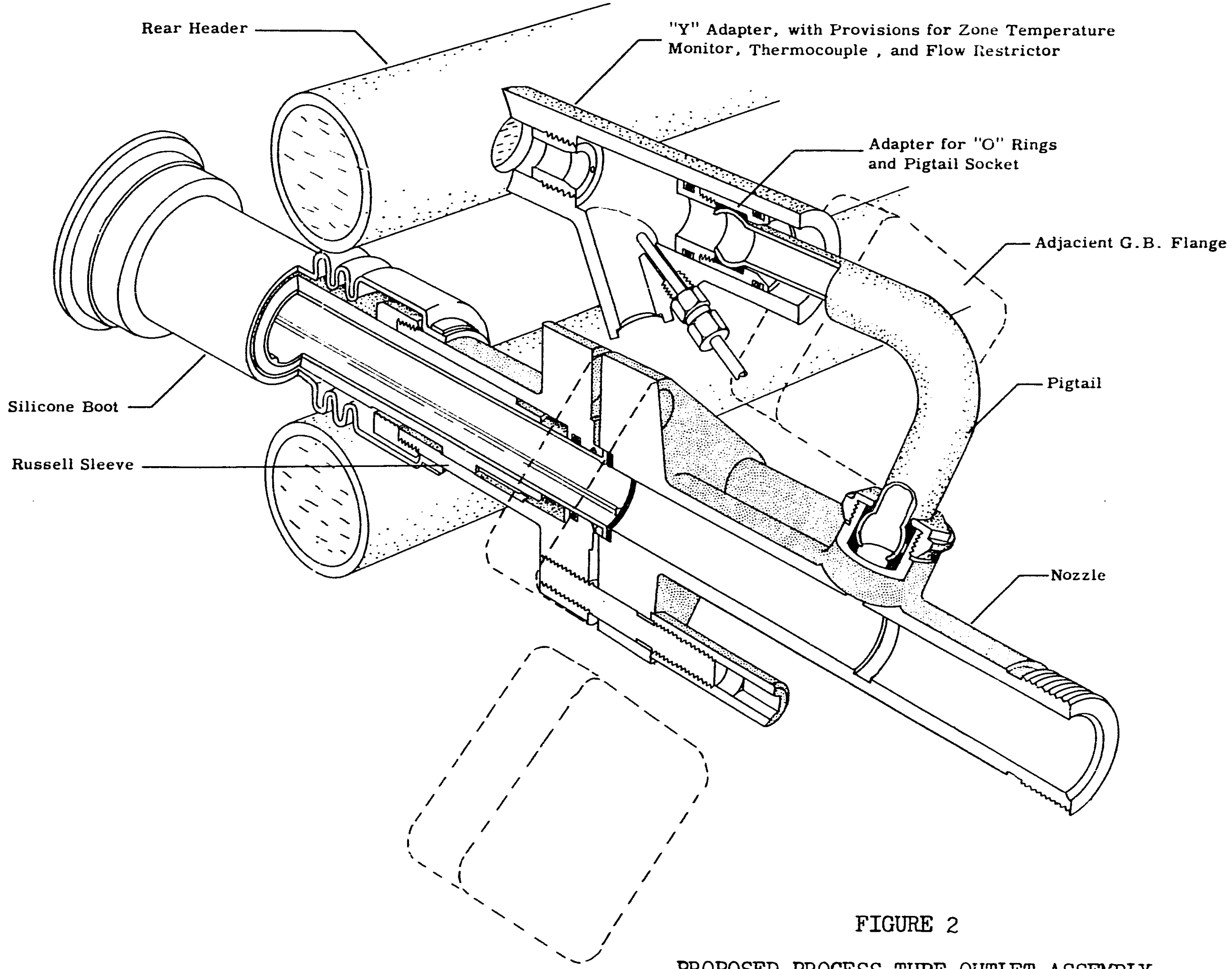

FIGURE 2

PROPOSED PROCESS TUBE OUTLET ASSEMBLY

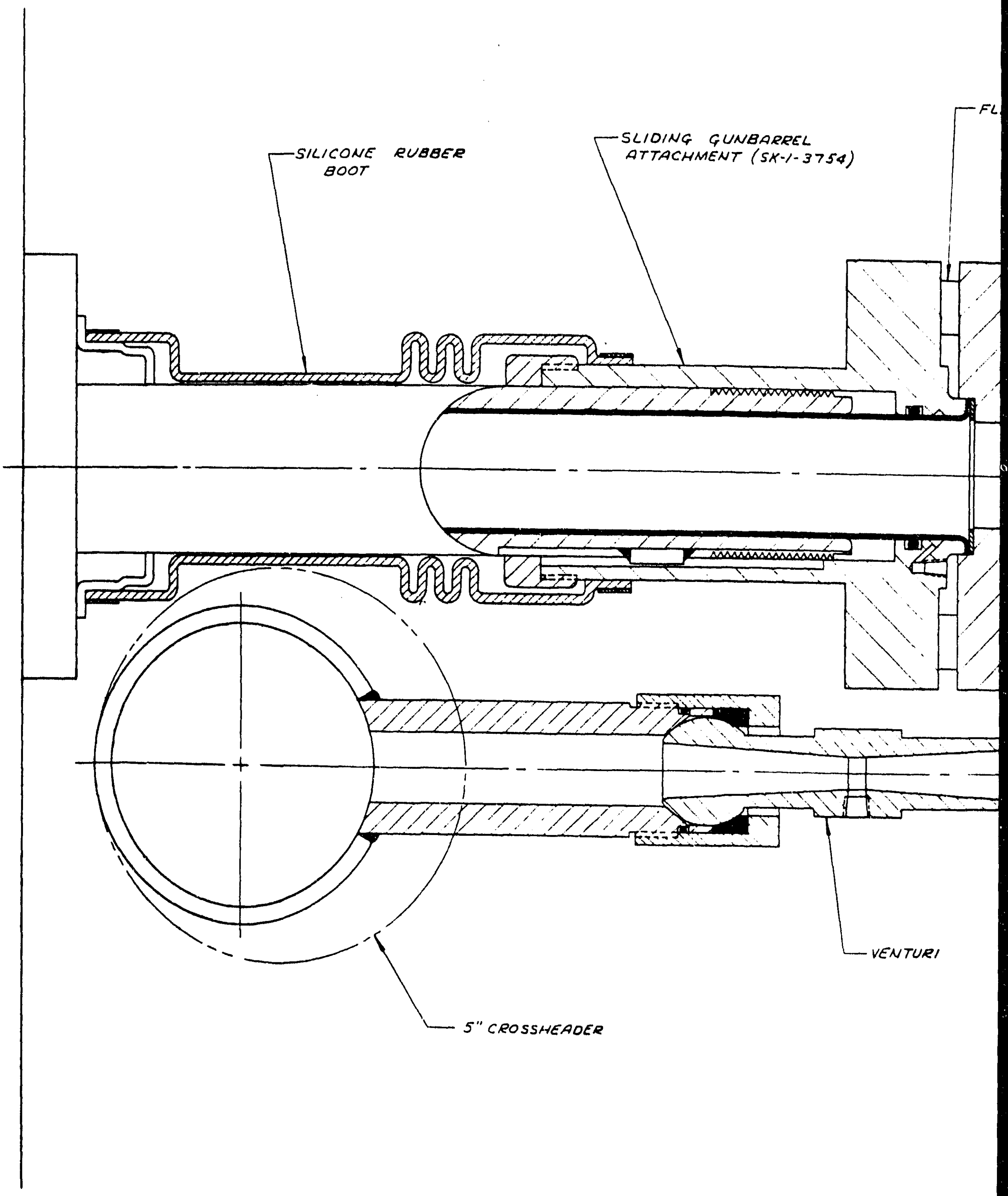
SILICONE RUBBER BOOT
SLIDING GUNBARREL ATTACHMENT (SK-1-3754)
FL
VENTURI
5" CROSSHEADER

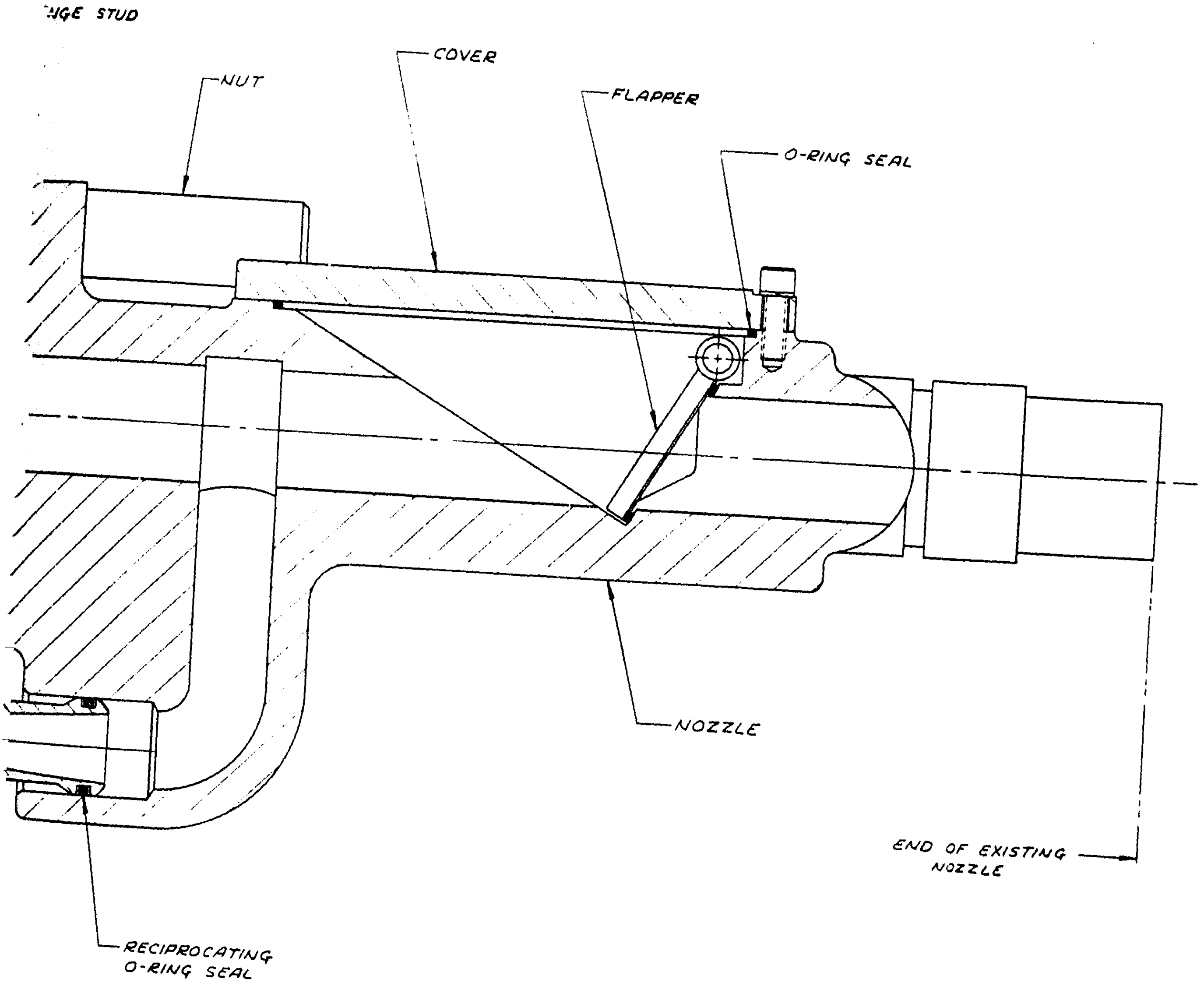

FIGURE 3
PROPOSED PROCESS TUBE INLET ASSEMBLY
SK-1-3959

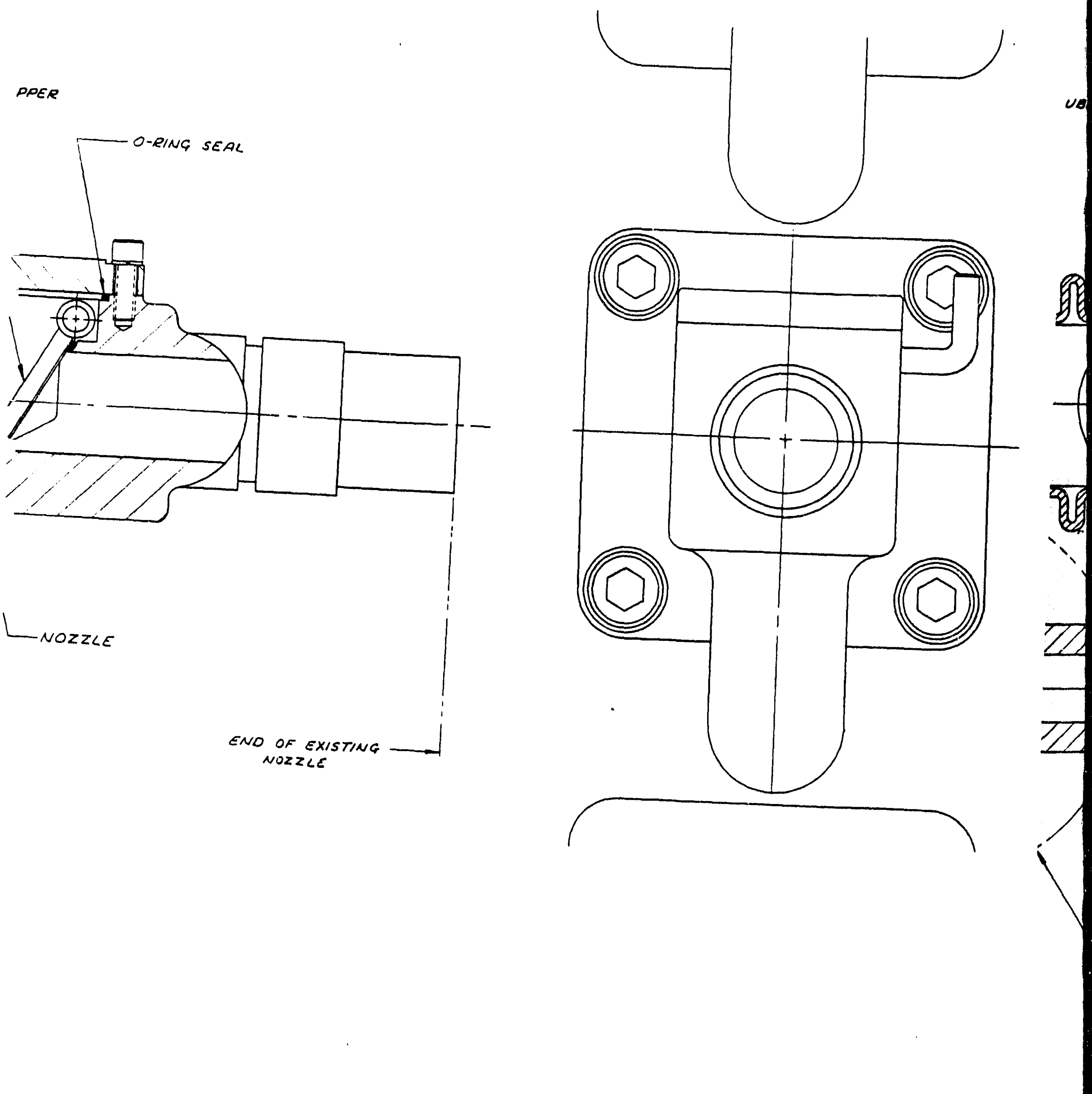
PPER
O-RING SEAL
NOZZLE
END OF EXISTING NOZZLE
UB

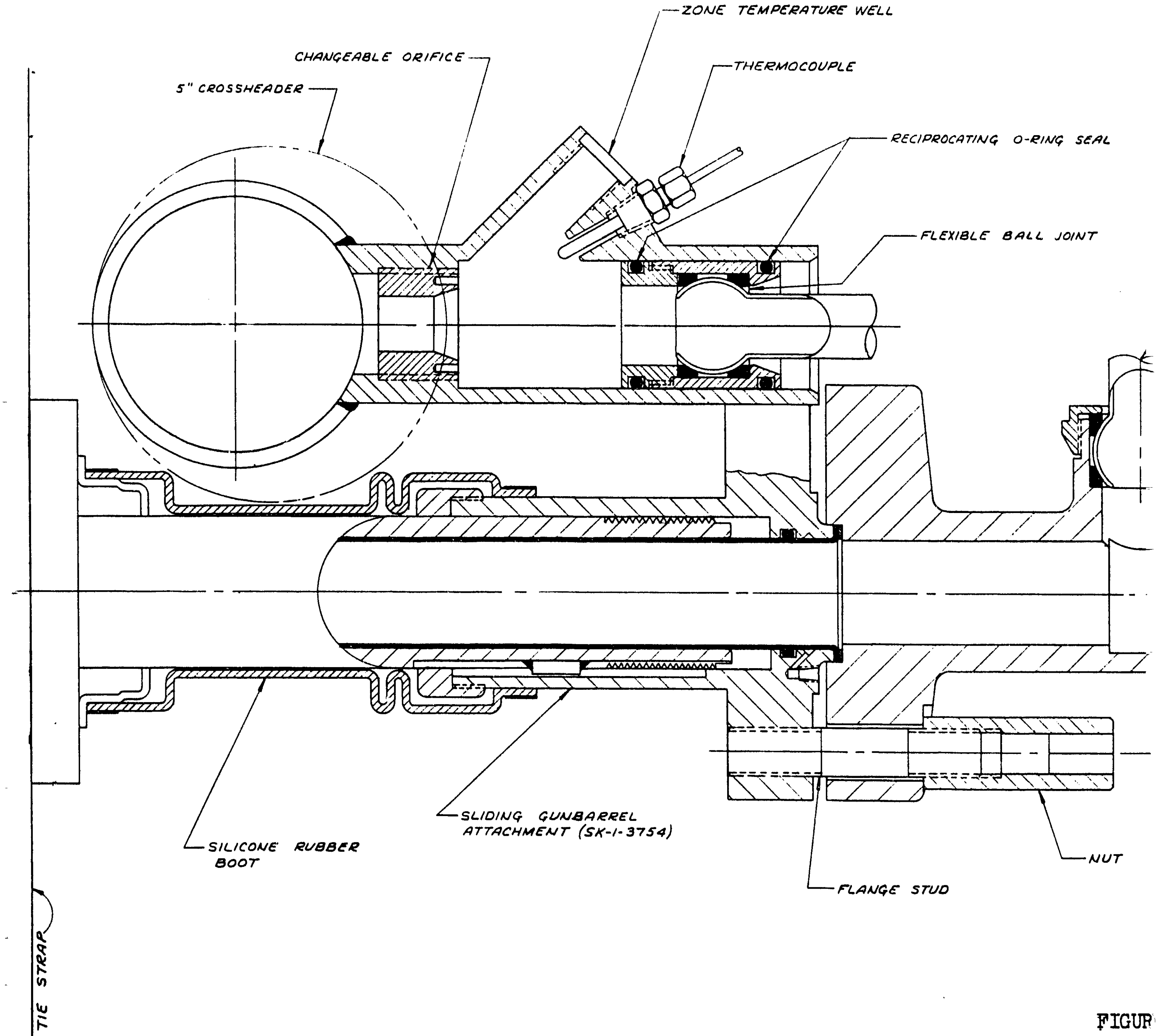

FIGUR
PROPOSED PROCESS TUB
SK-1-39

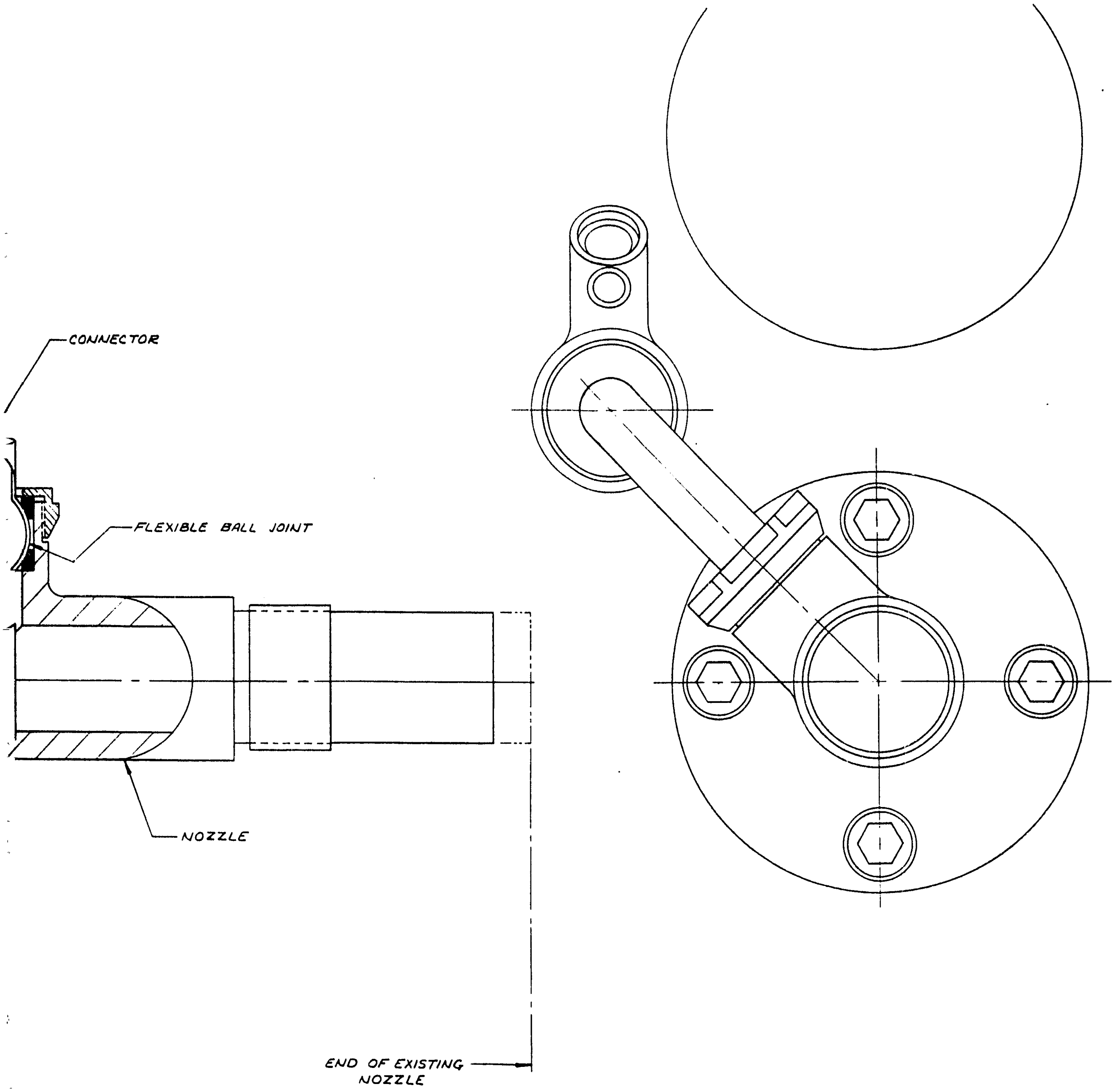

4
OUTLET ASSEMBLY

FLOW FOR FRONT FACE

Recommended Piping Sizes At Increased Flows For 95°C & 105°C. Bulk Effluent Temperatures At "B", "D" & "F" Reactors.

No.	Description	Existing Sizes	80,000	95,000	105,000	115,000	130,000
1	Valve Pit Manifold	36"	→	→	→	→	50"
2	Manifold To Riser	36"	→	→	→	→	44"
3	Riser Inlet	36"	→	→	→	→	44"
4	Inlet Loop	5" Sch 80	→	→	→	→	6" Sch 80
5	Strainer & Check Va.	5"-400#	→	→	→	→	6"-400#
6	Gate Valve	5"-300#	→	5"-400#	→	→	6"-400#
7	Crossheader Inlet	5" Sch 40	→	→	→	→	5" Sch 40
8	Crossheader Fitting	5/8" Tube	→	1" Tube	→	→	→

Recommended Piping Sizes At Increased Flows For 95°C. & 105°C. Bulk Effluent Temperatures At "DR" & "H" Reactors.

Existing Sizes	80,000	93,000	105,000	115,000	130,000
36" At DR. None At H.	→	→	→	→	30" At DR. →
36" At DR. 2-24" At H.	→	→	2-30" At H	→	44" At DR. →
36"	→	→	→	→	44"
6" Sch 80 *Alter. Rows	→	5" Sch 80 & 5" Sch 80 *Alter. Rows	→	→	6" Sch. 80 Every Row
6"-400# *Alter. Rows	→	6"-400#, 5"-400# *Alter. Rows	→	→	6"-400#, 6"-400# *Alter. Rows
6"-400# *Alter. Rows	→	6"-400#, 5"-400# *Alter. Rows	→	→	6"-400#, 6"-400# *Alter. Rows
4"-Sch 40 *Alter. Rows	→	4" Sch. 40 Every Row	→	→	5" Sch 40 Every Row
5/8" Tube	→	1" Tube		→	→

*Alter. = Alternate

Recommended Piping S
105°C Bulk Effluent Tem

Existing Sizes	Sizes Req 95,000
None	→
▲3-24"	→
2-30"	→
5" Sch 80	→
5"-400#	→
5"-400#	→
4" Sch 40	→
5/8" Tube	→

▲3-24" = From 190

SECRET

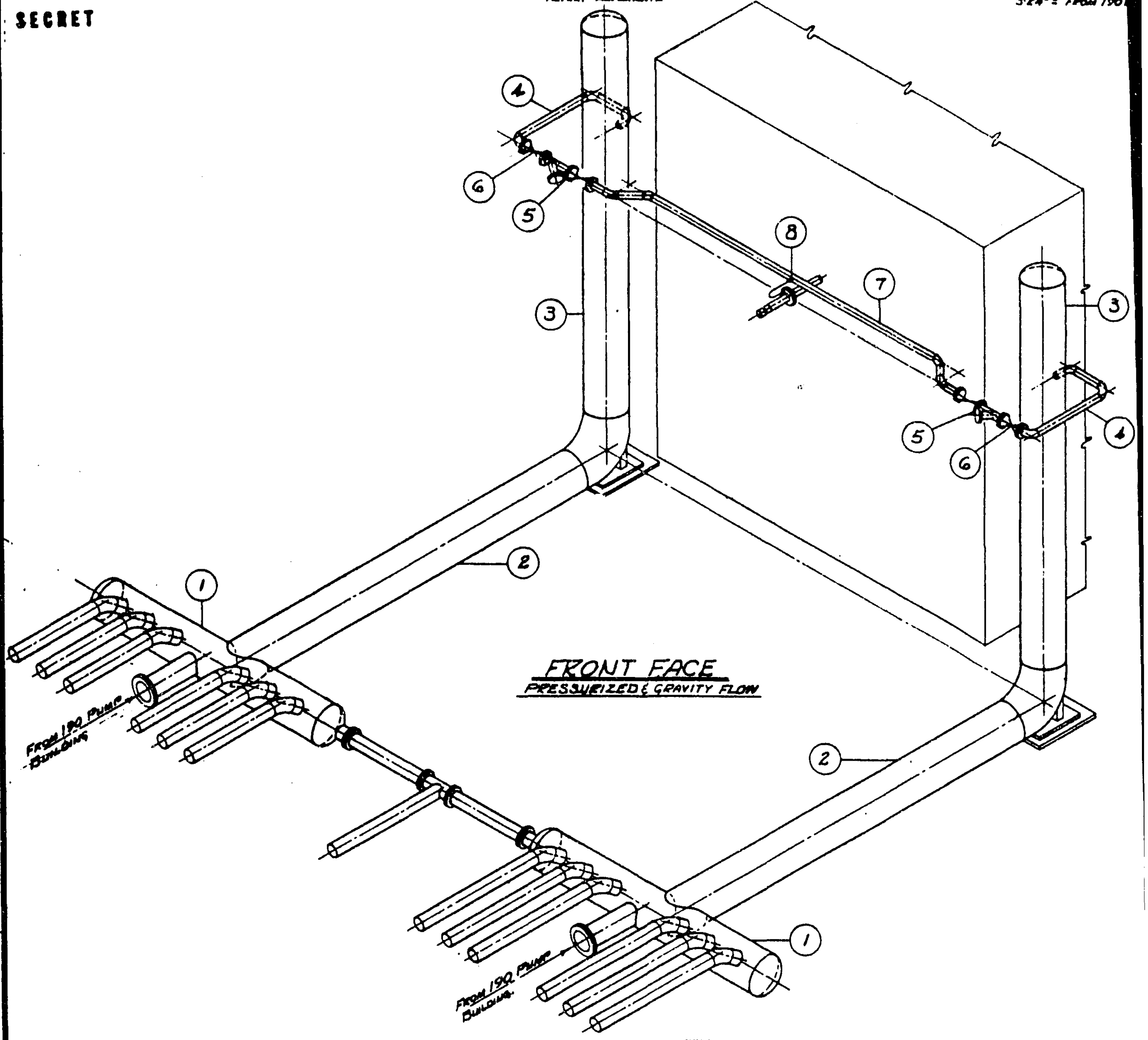

Recommended Piping Sizes At Increased Flows For
Effluent Temperatures At "B", "D" & "F" Reacto

No.	Description	Existing Sizes	80,000	95,000	105,000
1	Crossheader Fitting	5/8" Tube	1" Tube	→	→
2	Crossheader Outlet	4" Sch. 40	4" Sch. 20	→	→
3	Outlet Loop & Valves	4" Sch. 40	6" Tube	→	→
4	Outlet Riser	36"-3/4" Wall	42"-3/4" Wall	→	→
5	Riser Support	Fixed	Roller Type - To Allow Ris		
6	Crossunder Pipe	None	12" & 24" At B & D, 2-12" At F, 3		
7	Crossover Pipe	36"-3/4" Wall			
8	Crossover To Downcomer	42"-3/4" Wall	60"-3/4" Wall	→	→
9	Downcomer	One Cas-Cade Type	See Document HW-63		
10	Effluent Line	2-54" At B & D 60" At F	See Document HW-63		

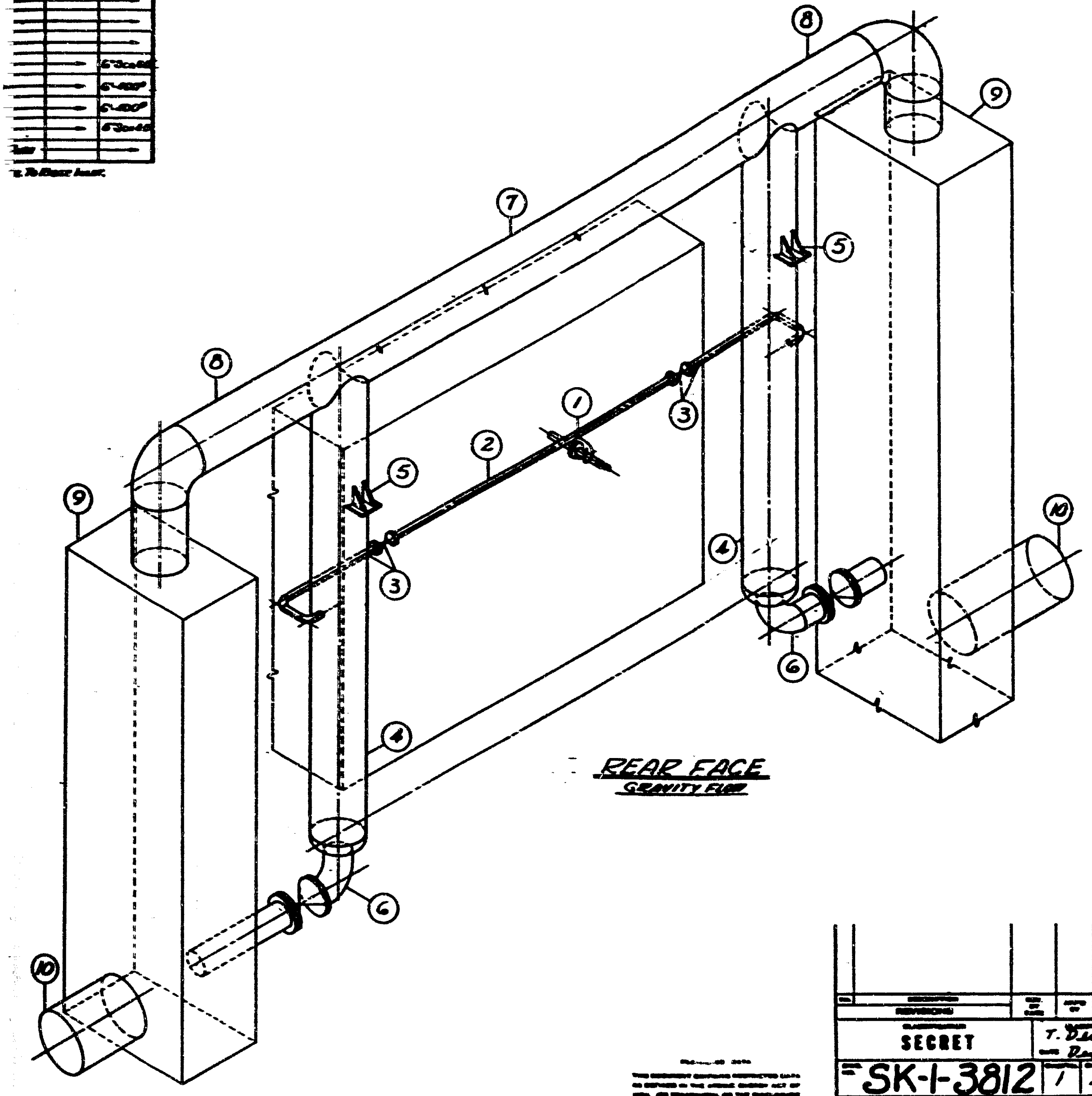

SECRET

T. D[illegible]
Dec 23 59

SK-1-3812 | 1 | 2 | 0

SCALE NONE

10554

DO-1121

U. S. ATOMIC ENERGY COMMISSION
HANFORD ATOMIC PRODUCTS OPERATION
GENERAL ELECTRIC

PROCESS PIPING FLOW SHEET

REACTOR INCREASE PRODUCTION
105 B,C,D,DR,F,H — 6401

SK-1-3812 | 1 | 2

FLOW FOR [illegible] FACE

Recommended Piping Sizes At Increased Flow For 95°C Bulk Effluent Temperatures At "DR" & "H" Reactors.

Existing Sizes	Sizes Required For Following Flows [illegible]	95,000	105,000	115,000	150,000
[illegible] Tube	1" Tube →				
4" Sch 40 [illegible]	4" Sch 30 [illegible] →				5" Tube
4" Sch 40 [illegible]	5" Tube [illegible] →				6" Tube [illegible]
35"-[illegible] Wall	40"-[illegible] Wall →			40"-[illegible] Wall	
Fixed	Roller Type - To Allow Riser To Move →				
Movable	2-35"-[illegible] [illegible] See Dwg. SK-1-3823 & 24 →				
35"-[illegible] Wall	→				
40"-[illegible] Wall	40"-[illegible] Wall →			40"-[illegible] Wall	
Van Car-cass Type	→				
2-66"	See Document HW-63[illegible], Table IV				

Recommended Piping Sizes At Increased Flow For 95°C Bulk Effluent Temperatures At "C" Reactor.

Existing Sizes	Sizes Required For Following Flows 95,000	105,000	115,000	150,000
1" Tube	→			
4" Sch 40	→			5" Tube
3" Sch 40	→			6" Tube
35"-[illegible] Wall	→			40"-[illegible] Wall
Fixed	Roller Type - To Allow Riser To Move			
Movable	[illegible] Required [illegible] Continuous [illegible]			
35"-[illegible] Wall	→			
[illegible] Wall	→			
Van Car-cass Type	→			
2-66" [illegible]	See Document HW-63487 Table [illegible]			

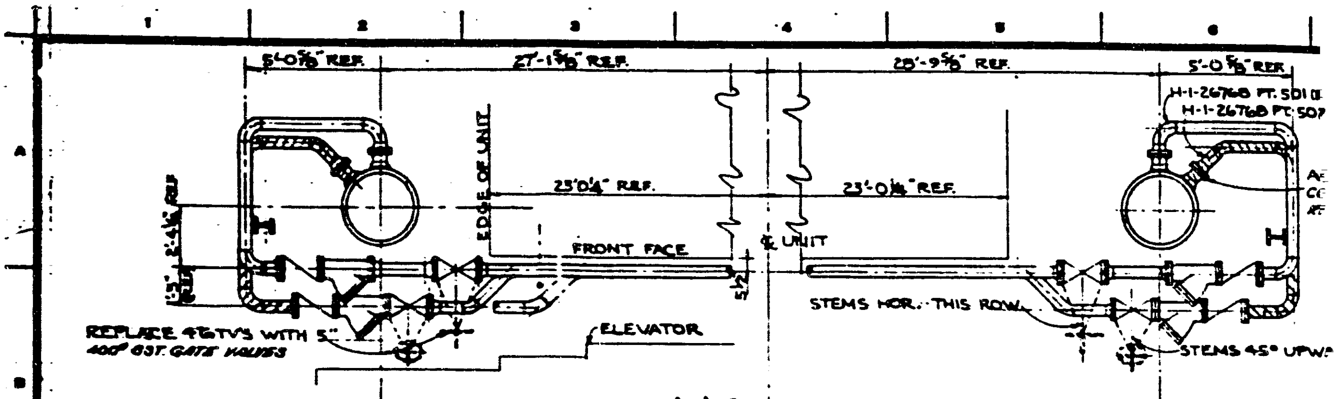

PARTIAL PLAN AT A-A 3/8"-1'-0"

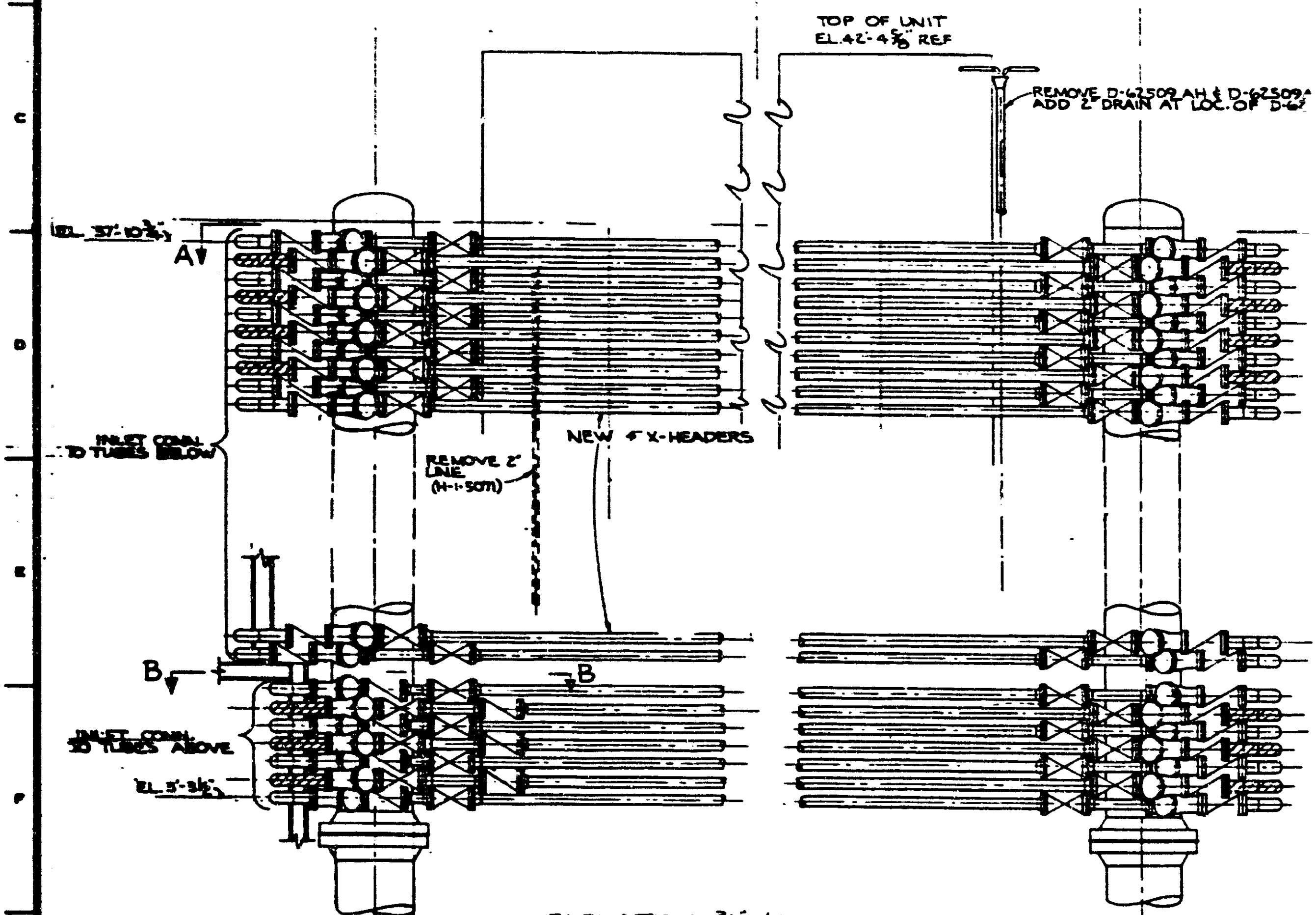

ELEVATION 3/8"-1'-0

(EXTRANEOUS PIPE OMITTED)

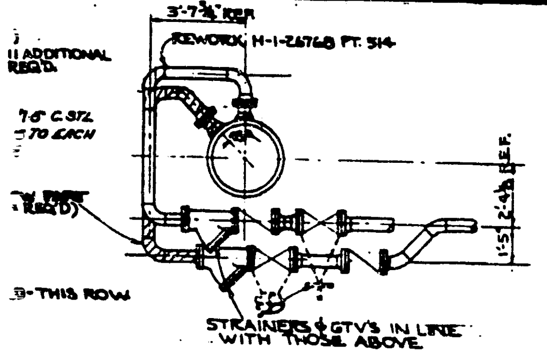

SECTION B-B 3/8"-1'-0"

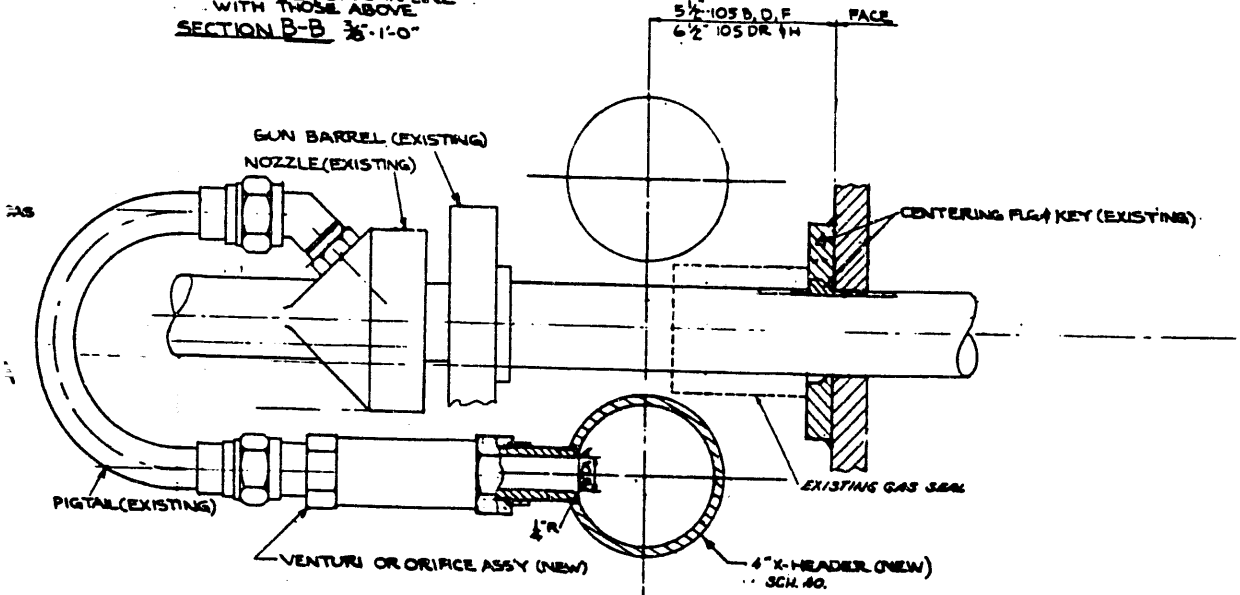

INLET DETAILS
½"=0'-1"

NOTE:
1. SEE DWG. SK-1-3812 SHTS. 1 & 2 FOR DELINEATION OF NEW WORK.

H-1-26... FRONT FACE ARRGT

REVISIONS

NONE

T. D...
Nov. 16, 59

SK-1-3826 – – 0

SCALE NOTED

DRAWN T.J.

DATE 1-5-60

MAINT. UNIT PE&A

10554

DO-1121

U. S. ATOMIC ENERGY COMMISSION
HANFORD ATOMIC PRODUCTS OPERATION
GENERAL ELECTRIC

PROCESS PIPING
TYP. FRONT FACE
ARRANGEMENT

REACTOR INCREASED PRODUCTION

105 B,D,F&F — 8481

SK-1-3826

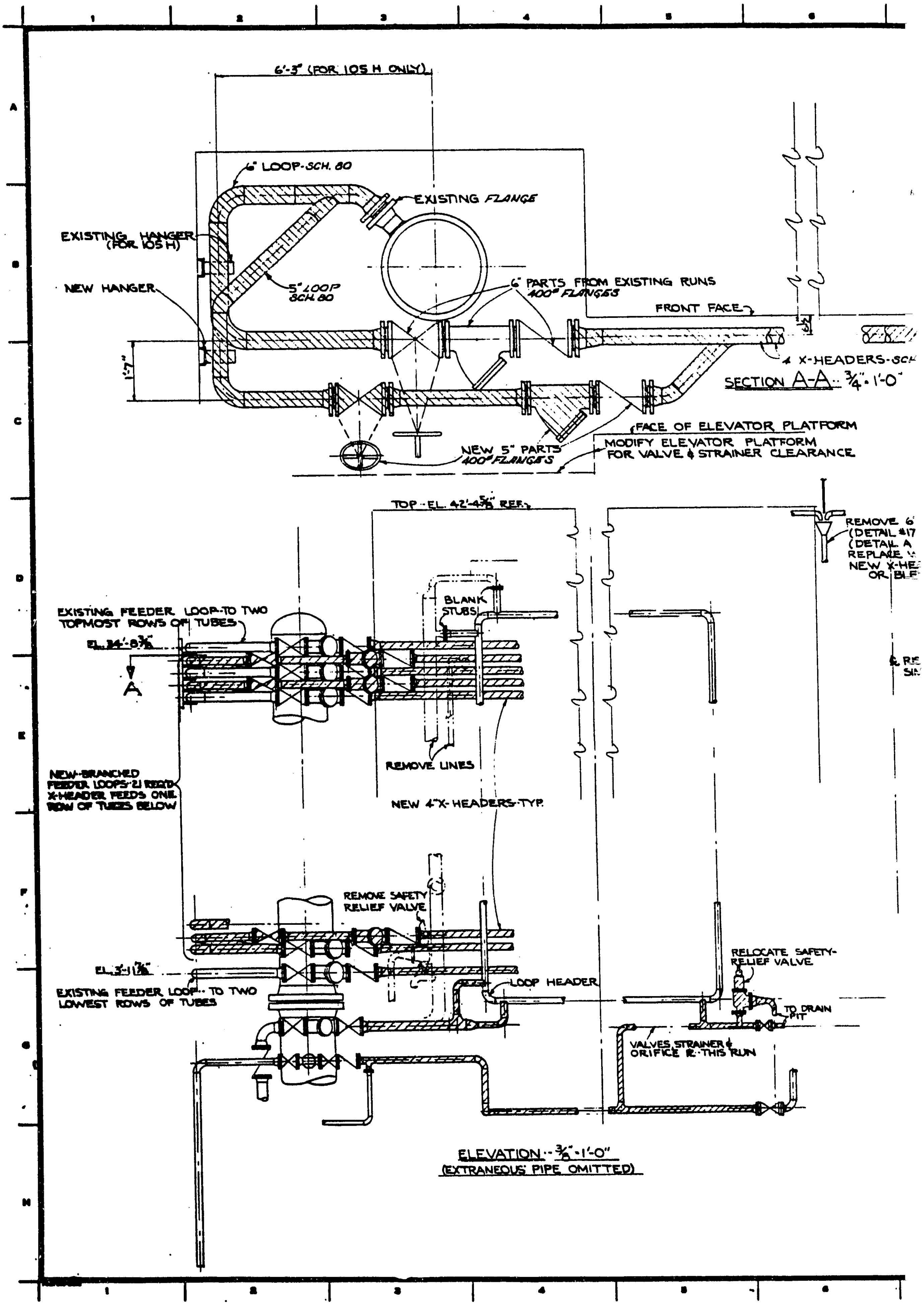

SECTION A-A ¾"-1'-0"

ELEVATION - ⅜"-1'-0"
(EXTRANEOUS PIPE OMITTED)

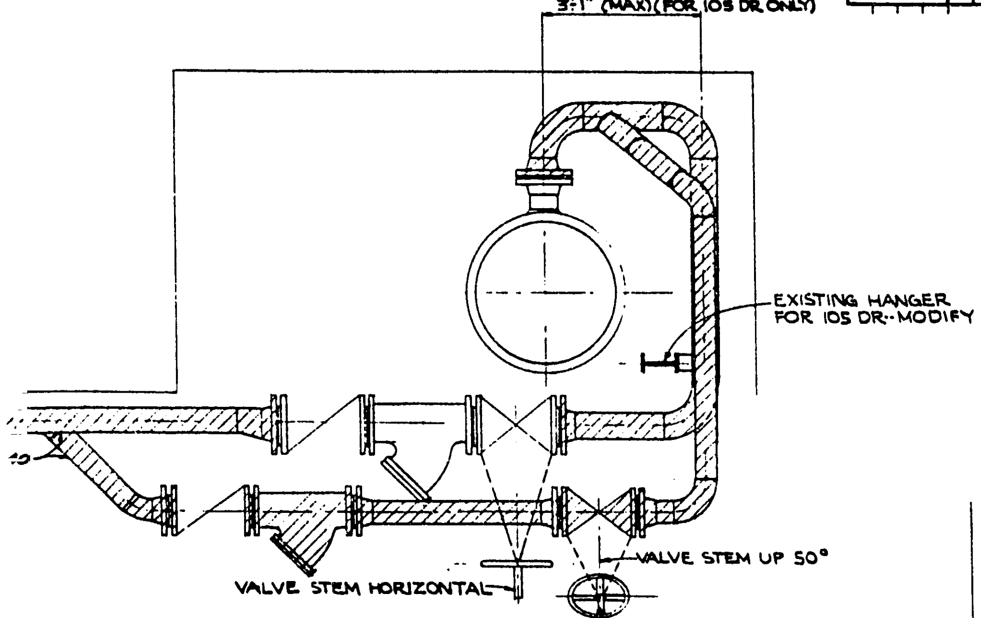

X-HEADERS' DRAIN
WG#P-1317 FOR 105-H)
WG #H-1-8317-DR FOR 105-DR)
TH 2" DRAIN
ERS DO NOT HAVE DRAINS
DERS

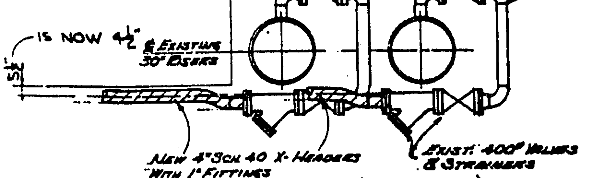

PARTIAL PLAN SECTION-(105C ONLY)
3/8" = 1'-0"

DETAIL "X"

X-- FEEDER CONN'S
TO OPP. SIDE

A

NOTES:

1. REFER TO DWG H-1-26108 FOR DETAIL OF PIPING TO LOOP HEADER
2. REFER TO DWG SK-1-3826 FOR DETAIL OF X-HEADER TO TUBE INLET
3. THIS DRAWING TYPICAL FOR 105 DR & H ONLY WORK SHOWN FOR "C" IS ON DETAIL "X"
4. SEE. DWG. SK-1-3812, SHTS. 1 & 2 FOR DELINEATION OF NEW WORK:

P-8451	INLET PIPING ARR'G'T
SK-1-3826	FRONT FACE ARR'G'T
H-1-26108	FRONT FACE ARR'G'T
H-1-39790R	FRONT FACE ARR'G'T (105 DR)
P-4819	FRONT FACE ARR'G'T (105H)

REVISIONS

NONE

W.R. Tabbs
11-23-59

SK-1-3827 — — 0

SCALE NOTED

DRAWN I. J. DATE 11-23-59
CHECKED DATE 1-5-60
Mon DT P&M
10554
DO-1121

CRW 1-20-60

U. S. ATOMIC ENERGY COMMISSION
HANFORD ATOMIC PRODUCTS OPERATION
GENERAL ELECTRIC

PROCESS PIPING
TYP. FRONT FACE
ARRANGEMENT

REACTOR INCREASED PRODUCTION
105 DR, H & C 8401

SK-1-3827 — —

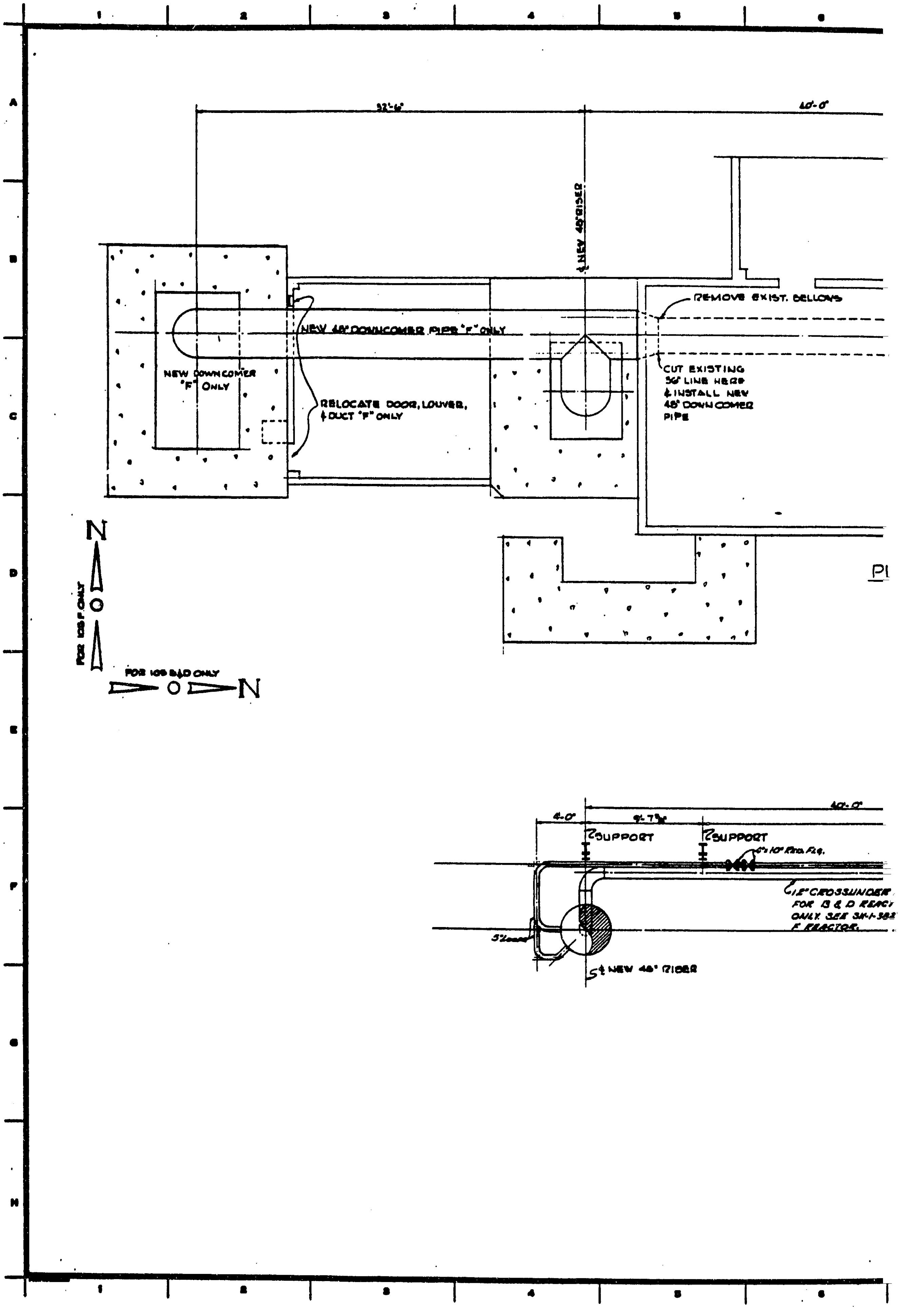
1
2
3
4
5
6
A
B
C
D
E
F
G
H
32'-6"
40'-0"
℄ NEW 48" RISER
REMOVE EXIST. BELLOWS
NEW 48" DOWNCOMER PIPE "F" ONLY
CUT EXISTING 36" LINE HERE & INSTALL NEW 48" DOWNCOMER PIPE
NEW DOWNCOMER "F" ONLY
RELOCATE DOOR, LOUVER, & DUCT "F" ONLY
Pl
N
FOR 105 F ONLY
FOR 105 B & D ONLY
N
4-0"
9'-7⅝"
40'-0"
℄ SUPPORT
℄ SUPPORT
6"x10" Red. Flg.
℄ 12" CROSSUNDER FOR B & D REACT ONLY. SEE SK-1-382 F REACTOR.
5" Loop
S℄ NEW 48" RISER

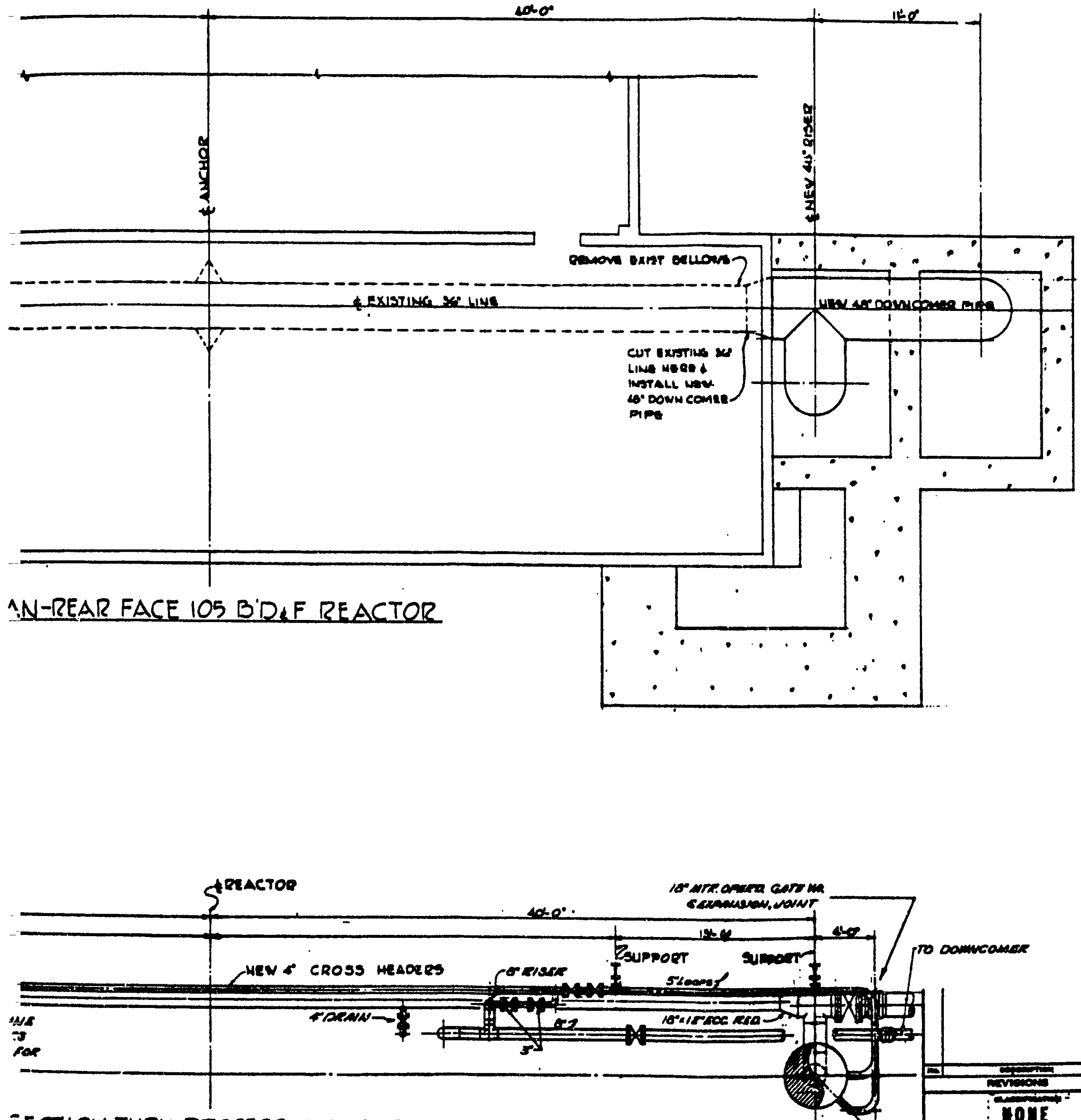

SECTION THRU PROCESS HEADERS

NOTE:
SEE DWG. SK-1-3812 SHT. 1 FOR DELINEATION OF NEW WORK.

	HW-70644	ELEV.-OUTLET END PROCESS WATER
	HW-3822	ELEV. 105 B, D & F REAR FACE GRAVITY FLOW
	DWG. NO.	DRAWING TITLE
	REFERENCE DRAWINGS	

REVISIONS

CLASSIFICATION NONE

DATE 11/11/59

SK-1-3821

SCALE 1/4" = 1'-0"

DRAWN H. R. WITT DATE 10/59

UNIT PLM

10554

DO-1121

U. S. ATOMIC ENERGY COMMISSION
HANFORD ATOMIC PRODUCTS OPERATION
GENERAL ELECTRIC

PROCESS PIPING
REAR FACE
GRAVITY FLOW

REACTOR INCREASED PRODUCTION
105 B D & F

SK-1-3821

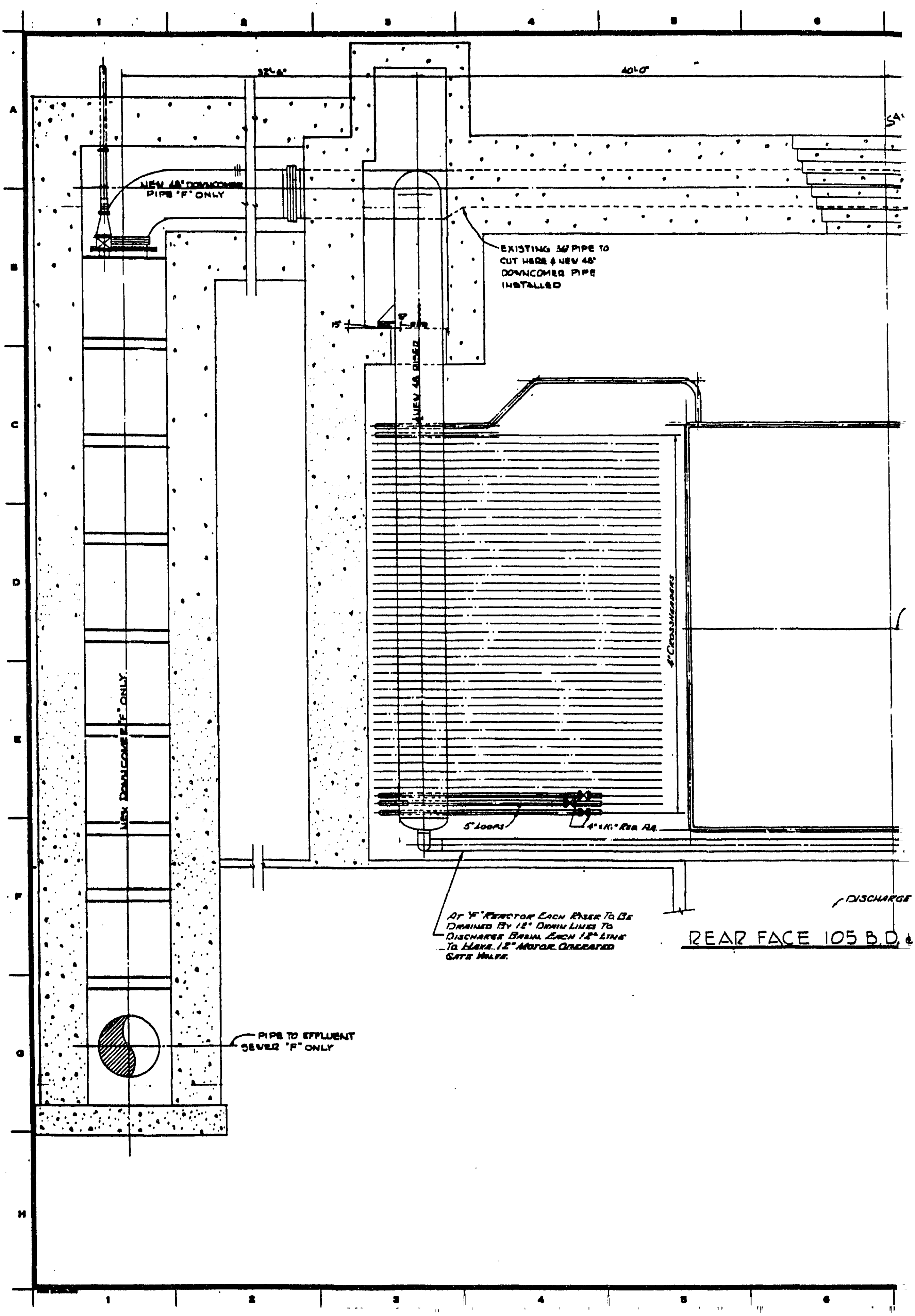1
2
3
4
5
6
A
B
C
D
E
F
G
H
32'-6"
40'-0"
NEW 48" DOWNCOMER PIPE "F" ONLY
EXISTING 36" PIPE TO CUT HERE & NEW 48" DOWNCOMER PIPE INSTALLED
15"
NEW 48 RISER
NEW DOWNCOMER "F" ONLY
4" CROSSHEADERS
5 LOOPS
4" x 1½" RED. AR.
AT "F" REACTOR EACH RISER TO BE DRAINED BY 12" DRAIN LINES TO DISCHARGE BASIN. EACH 12" LINE TO HAVE 12" MOTOR OPERATED GATE VALVE.
DISCHARGE
REAR FACE 105 B.D. &
PIPE TO EFFLUENT SEWER "F" ONLY

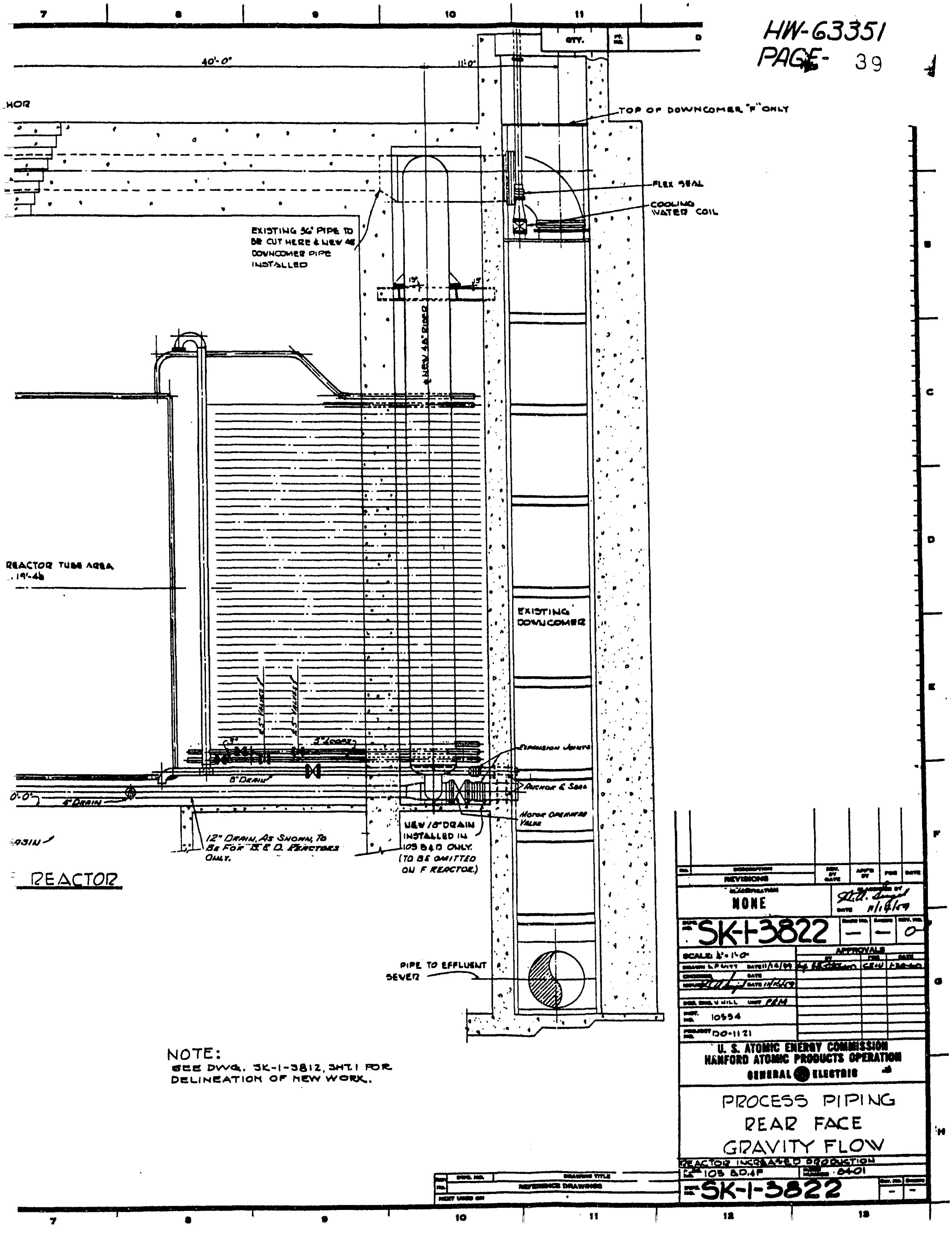

NOTE:
SEE DWG. SK-1-3812, SHT. 1 FOR DELINEATION OF NEW WORK.

REVISIONS

CLASSIFICATION
NONE

DATE 11/18/59

SK-1-3822 — — 0

SCALE: ⅛" = 1'-0"
DRAWN L.P. WITT DATE 11/14/59
CHECKED DATE
DATE 11/18/59
DES. ENG. V HILL UNIT PRM
10554
PROJECT NO. DO-1121

APPROVALS

U. S. ATOMIC ENERGY COMMISSION
HANFORD ATOMIC PRODUCTS OPERATION
GENERAL ELECTRIC

PROCESS PIPING
REAR FACE
GRAVITY FLOW

REACTOR INCREASED PRODUCTION
105 BD.4F
0401

SK-1-3822 — —

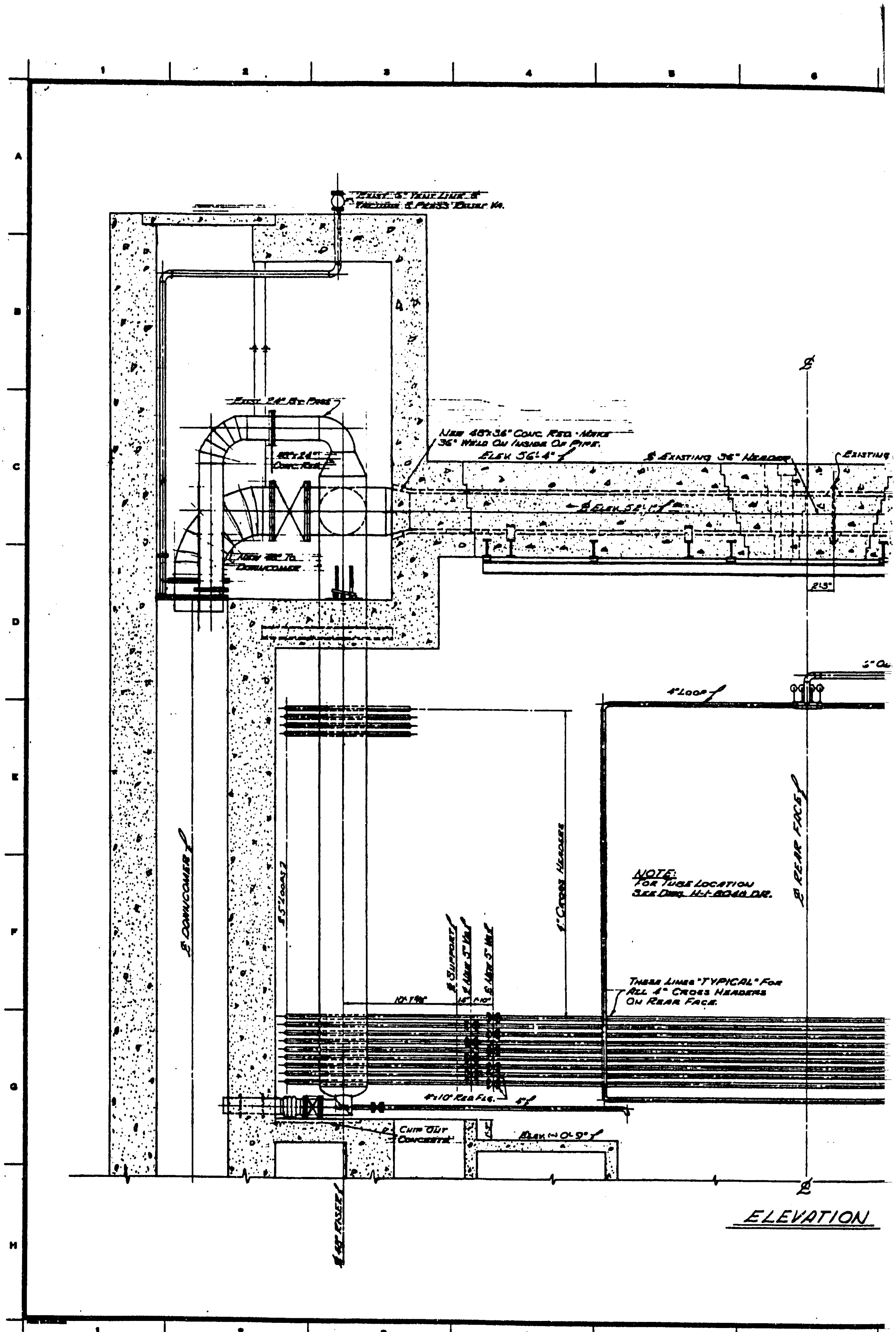
1
2
3
4
5
6
A
B
C
D
E
F
G
H
EXIST. 6" VENT LINE &
VACUUM & PRESS. RELIEF VA.
EXIST. 24" BY PASS
NEW 48"x36" CONC. RED. MAKE
36" WELD ON INSIDE OF PIPE.
ELEV. 56'-4"
48"x24" CONC. RED.
NEW 48" TO DOWNCOMER
℄ EXISTING 36" HEADER
EXISTING
℄ ELEV. 52'-1"
℄
2'-5"
4" LOOP
5" OU
℄ DOWNCOMER
℄ 5" LOOPS
℄ 4" CROSS HEADERS
NOTE:
FOR TUBE LOCATION
SEE DWG. H-1-80414 D.R.
℄ REAR FACE
THESE LINES "TYPICAL" FOR
ALL 4" CROSS HEADERS
ON REAR FACE.
℄ SUPPORT
℄ NEW 5" VA.
℄ NEW 5" VA.
10'-7⅛"
1'-5"
1'-10"
4"x10" RED. FLG.
4" ℄
CHIP OUT CONCRETE
ELEV. ±0'-9" ℄
℄ 48" RISER
℄

ELEVATION

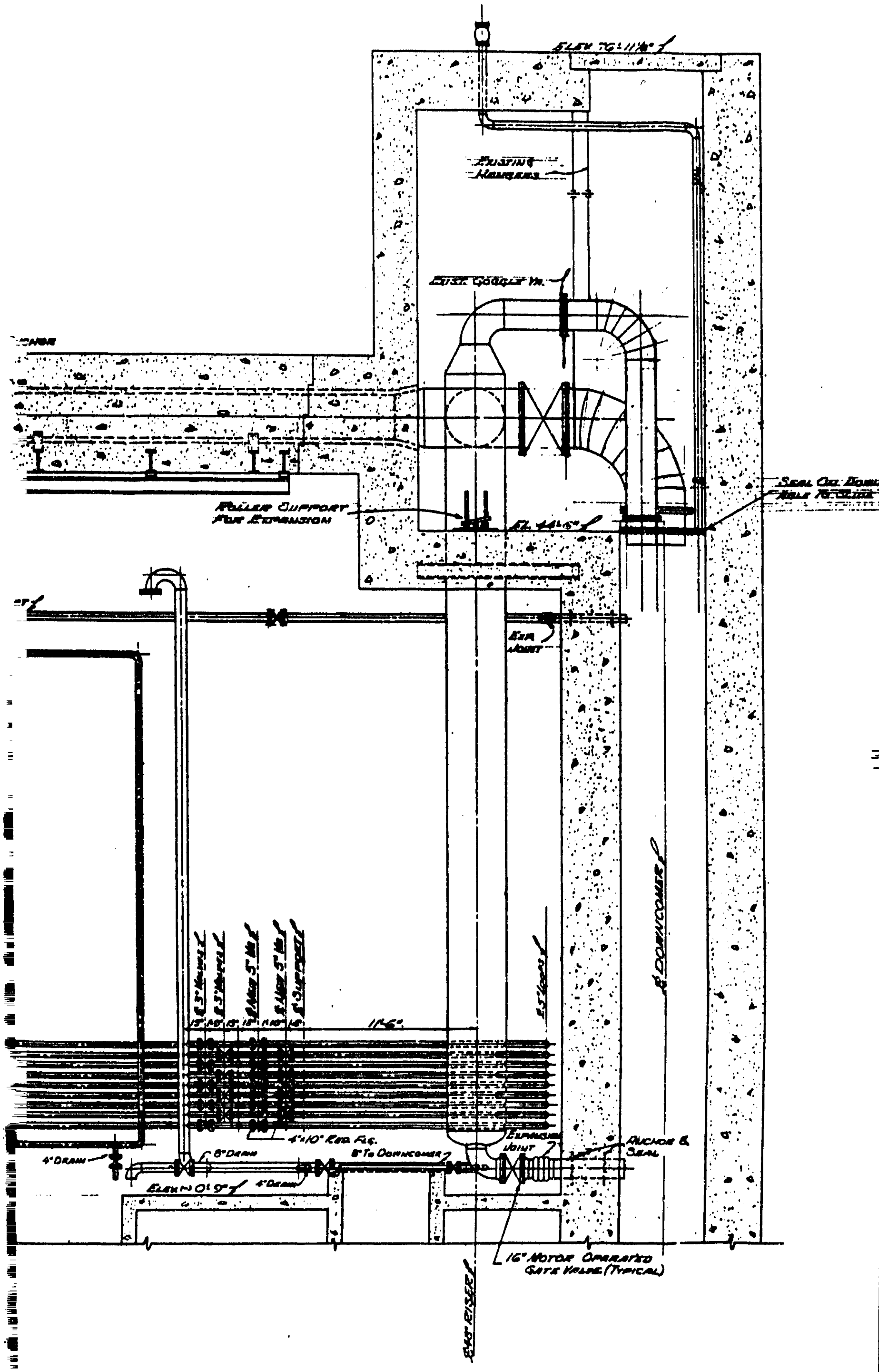

NOTES:
1. SEE DWG. SK-1-3815, PLAN "12"
2. SEE DWG. SK-1-3812, SH. 1 FOR DELINEATION OF NEW WORK.
~~3. SEE DWG. [illegible] FOR HEADERS TO DOWNCOMERS~~

REVISIONS

CLASSIFICATION
NONE

CLASSIFIED BY: H. J. Engel
DATE 11/12/59

DWG. NO. SK-1-3823 ~ ~ 0

SCALE: ¼" = 1'-0"
DRAWN MANN DATE 11-10-59
CHECKED DATE
APPROVED R. A. Engel DATE 11/11/59
DES. ENG. HILL UNIT P.E.E.
DEPT. NO. 10554
PROJECT NO. DO-1121

APPROVALS

BY	FOR	DATE
[illegible]	SPMU	1-20-60

U. S. ATOMIC ENERGY COMMISSION
HANFORD ATOMIC PRODUCTS OPERATION
GENERAL ELECTRIC

PROCESS PIPING
REAR FACE GRAVITY FLOW

REACTOR INCREASED PRODUCTION
BLDG. NO. 105 DR. 8401
DWG. NO. SK-1-3823 ~ ~

REFERENCE DRAWINGS
NEXT USED ON SEE NOTE AT 12-E, THIS DWG.

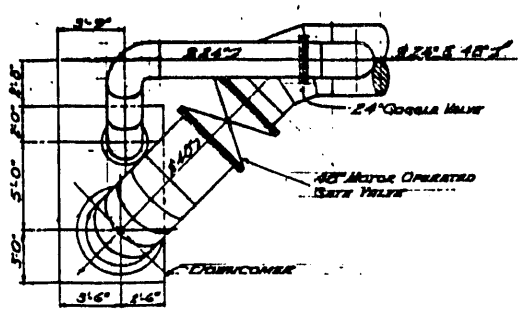

SECTION "C-C"

Left Side To Be As Shown.
Right Side, Opposite Hand.

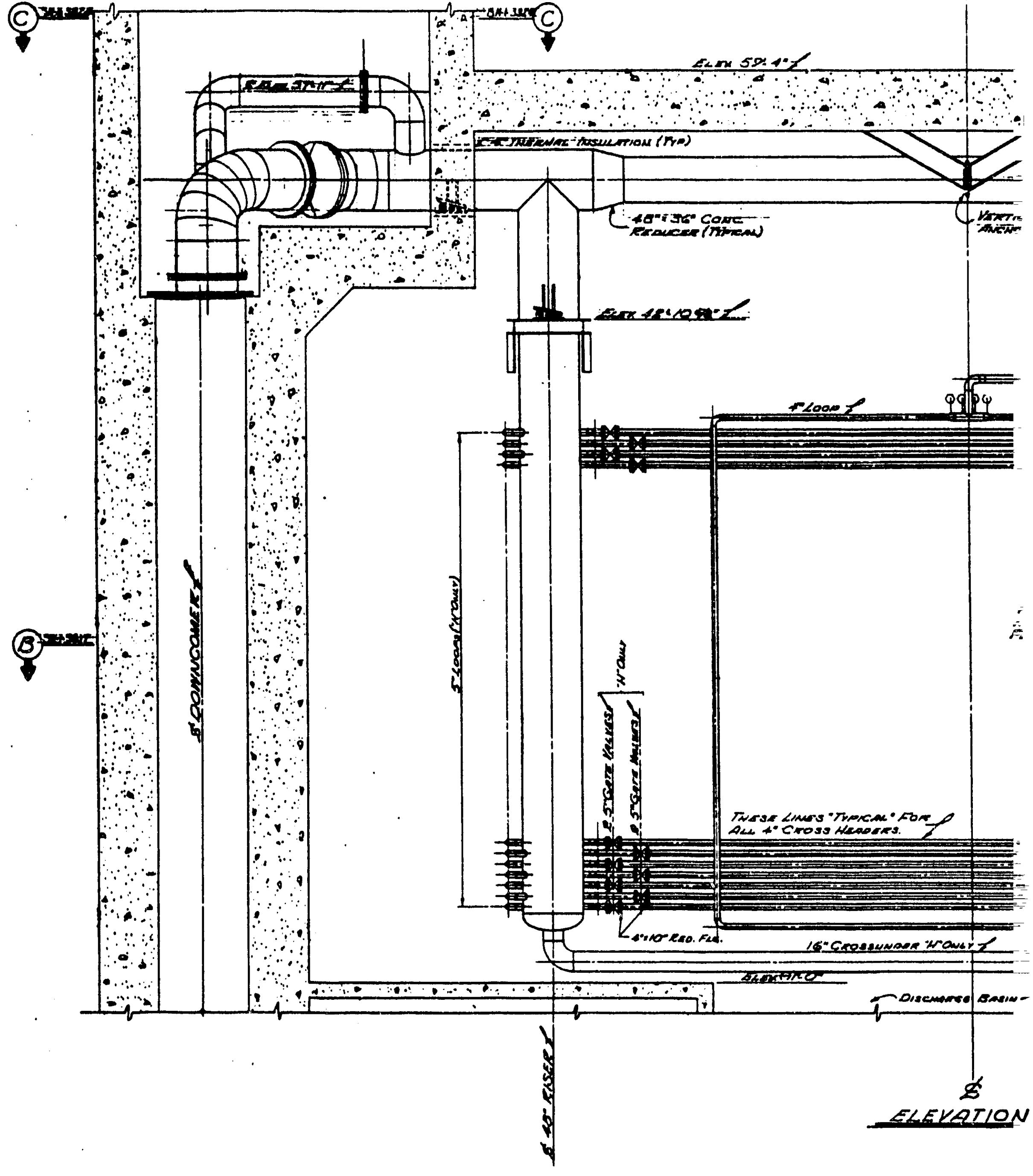

ELEVATION

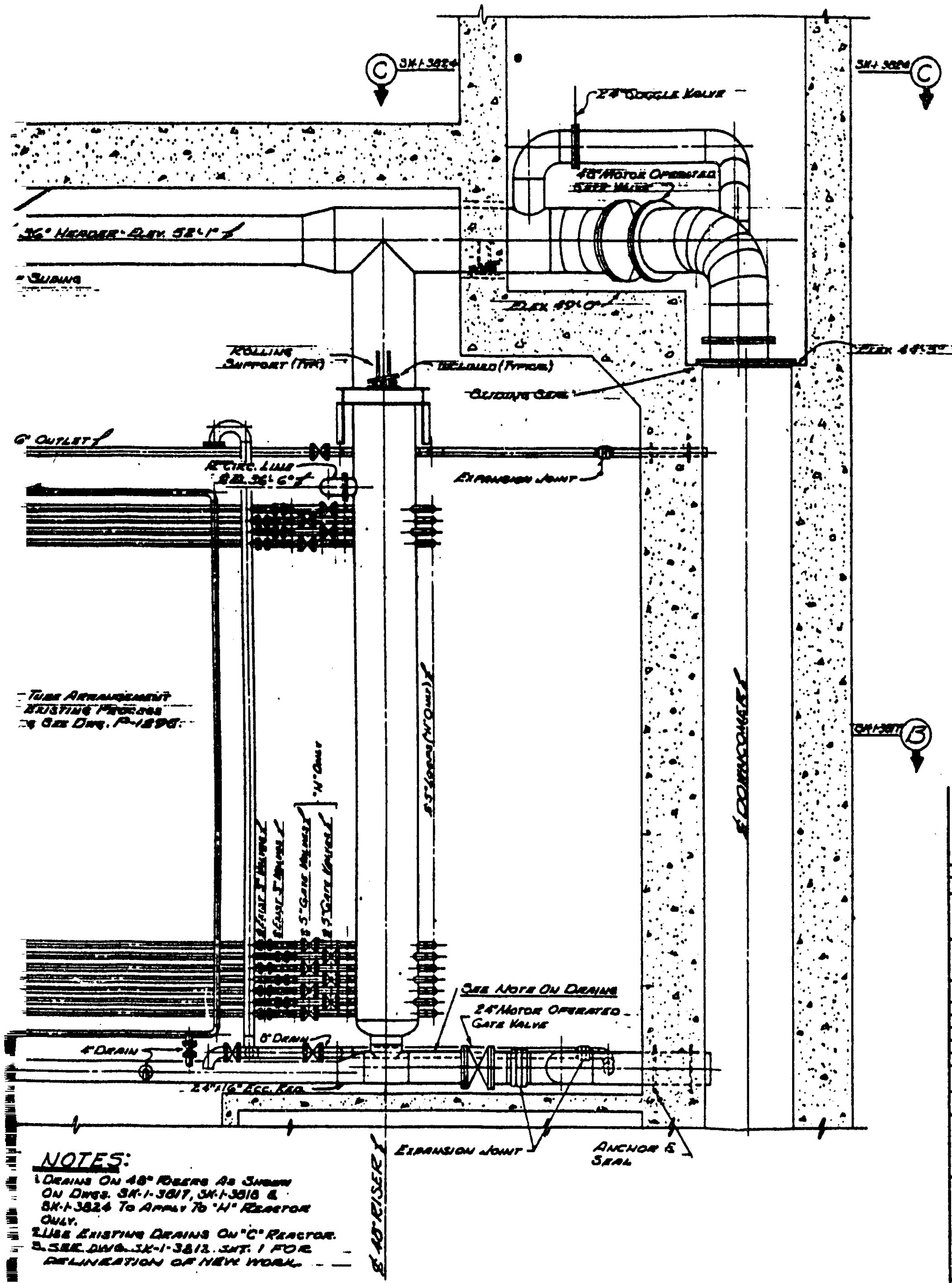

NOTES:

1. DRAINS ON 48" RISERS AS SHOWN ON DWGS. SK-1-3817, SK-1-3818 & SK-1-3824 TO APPLY TO "H" REACTOR ONLY.
2. USE EXISTING DRAINS ON "C" REACTOR.
3. SEE DWG. SK-1-3812. SHT. 1 FOR DELINEATION OF NEW WORK.

REVISIONS

NONE

SK-1-3824 ~ ~ 0

SCALE: 1/4" = 1'-0"

DRAWN HANY DATE 11-30-58

DES. ENG. KNELL UNIT PRM

10554

DO-1121

APPROVALS BY	FOR	DATE
[illegible]	CDAH	1-26-59

U. S. ATOMIC ENERGY COMMISSION
HANFORD ATOMIC PRODUCTS OPERATION
GENERAL ● ELECTRIC

PROCESS PIPING
REAR FACE GRAVITY FLOW

REACTOR INCREASED PRODUCTION

105 H & C 8401

SK-1-3824 — —

REFERENCE DRAWINGS

NEXT USED ON SK-1-3817, PLAN-REAR FACE PRESS.

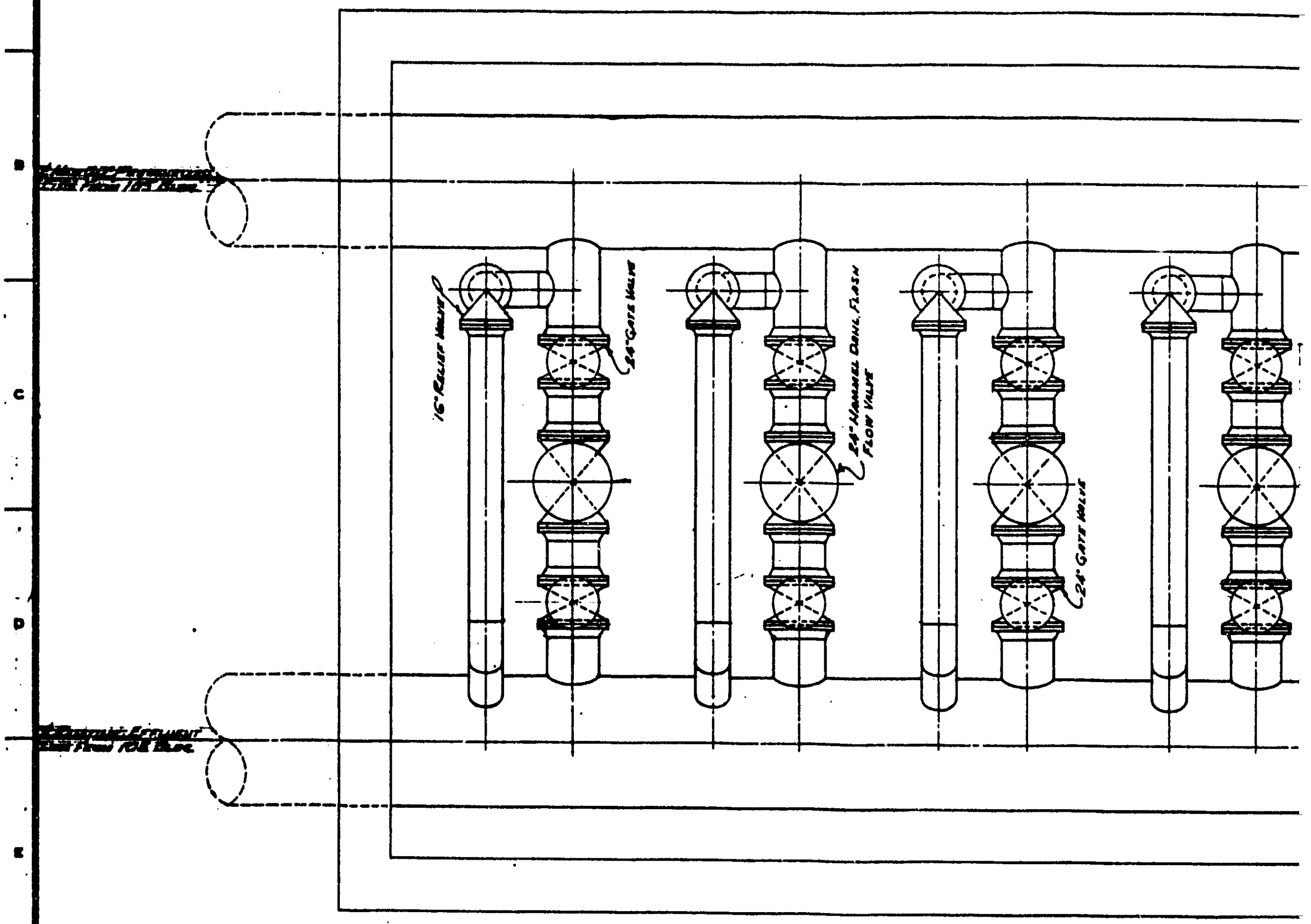

PLAN

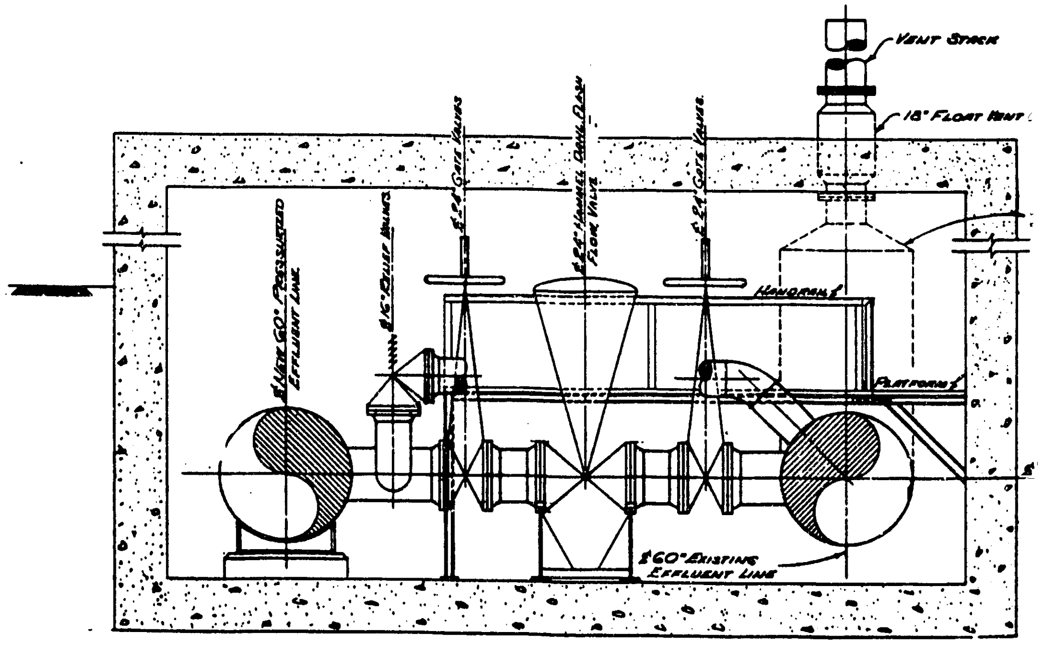

SECTION (A)

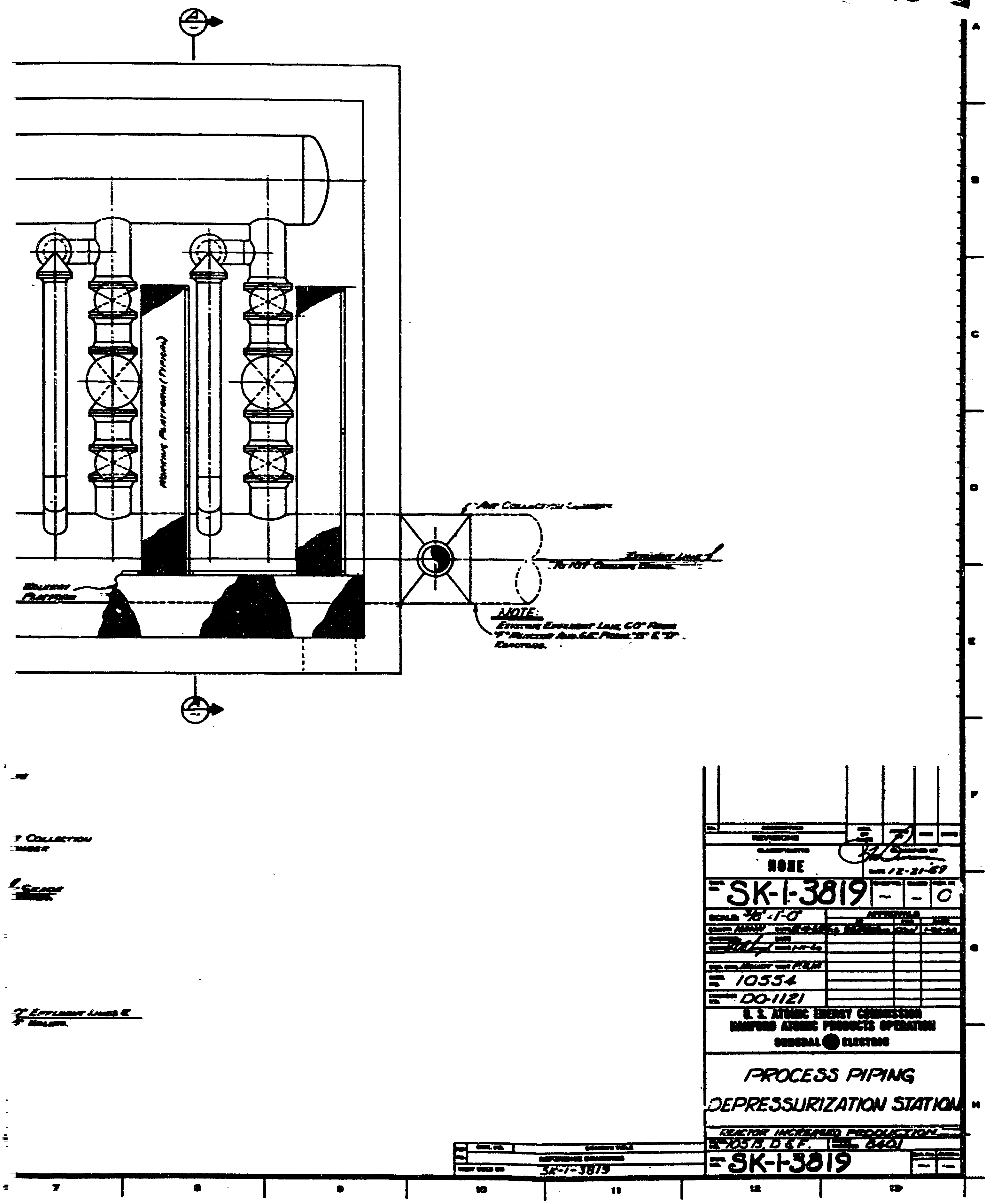

NOTE:
Existing Effluent Line, 60" From "F" Reactor And 66" From "B" & "D" Reactors.

NONE

SK-1-3819 – – 0

Date 12-21-59

Scale 3/16" = 1'-0"

10554

DO-1121

U. S. ATOMIC ENERGY COMMISSION
HANFORD ATOMIC PRODUCTS OPERATION
GENERAL ELECTRIC

PROCESS PIPING
DEPRESSURIZATION STATION

REACTOR INCREASED PRODUCTION
105 B, D & F. 8401

SK-1-3819 – –

SK-1-3819

SECRET

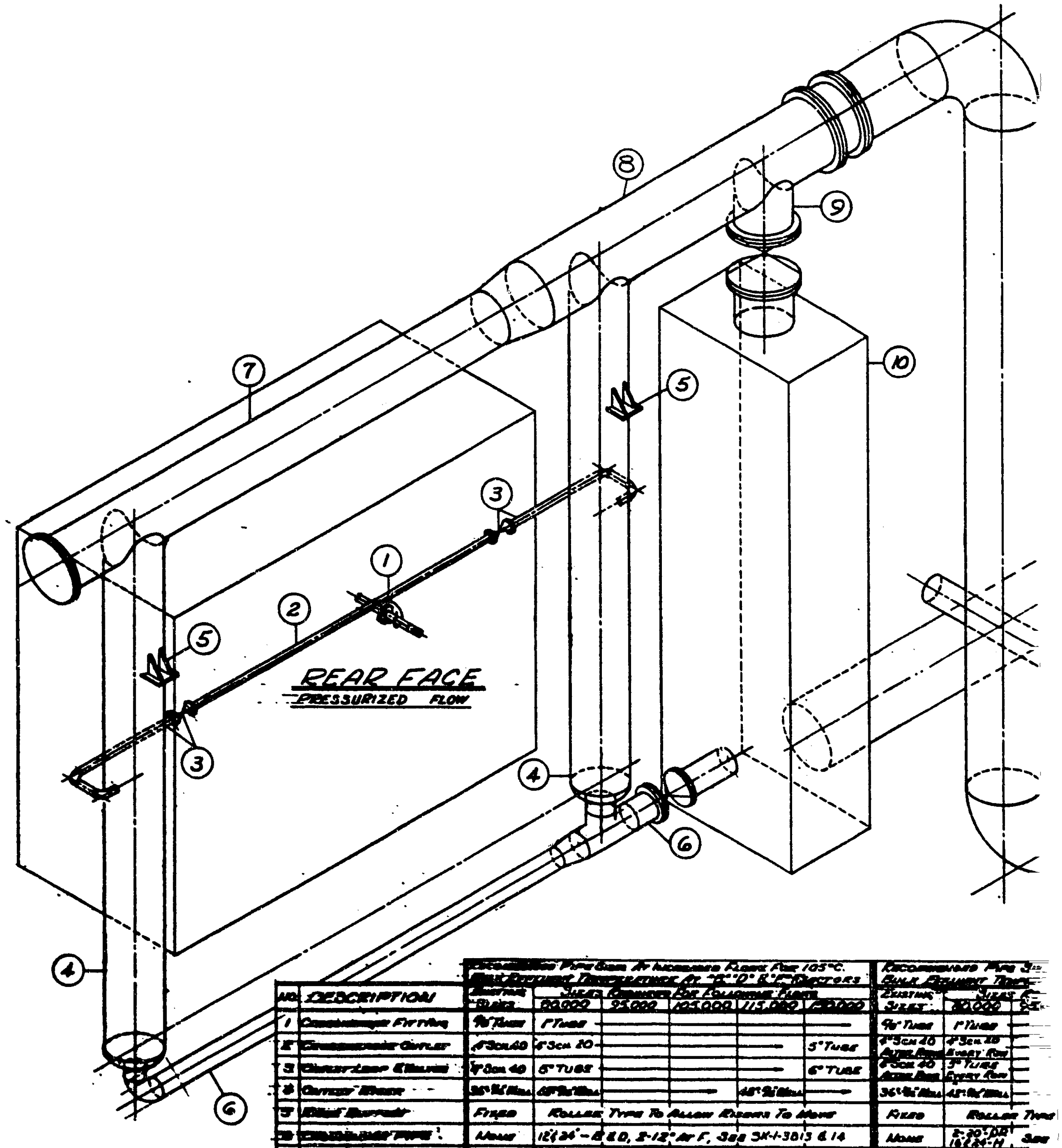

NO.	DESCRIPTION	[illegible] Pipe Sizes At Increased Flows For 105°C. [illegible] Effluent Temperature At "?" "D" & "F" Reactors						Recommended Pipe S[illegible] Bulk Effluent Tem[illegible]		
		Existing Sizes	Sizes Required For Following Flows					Existing Sizes	Sizes	
			90,000	95,000	105,000	115,000	120,000		90,000	9[illegible]
1	[illegible] Fitting	[illegible] Tube	1" Tube	—	—	—	→	[illegible] Tube	1" Tube	—
2	[illegible] Outlet	4" Sch 40	6" Sch 20	—	—	→	5" Tube	4" Sch 40 [illegible] Row	4" Sch 20 Every Row	—
3	[illegible]	[illegible] Sch 40	5" Tube	—	—	→	6" Tube	4" Sch 40 [illegible]	5" Tube Every Row	—
4	[illegible]	36" [illegible]" Wall	48" [illegible]" Wall	—	→	48" [illegible]" Wall	→	36" [illegible]" Wall	48" [illegible]" Wall	—
5	[illegible] Support	Fixed	Roller Type To Allow Risers To Move					Fixed	Roller Type	
6	[illegible] Pipe	None	12 & 24" - B & D, 2-12" At F, See SK-1-3013 & 14					None	2-30" DR 16 & 24"-H	See
7	[illegible] Pipe	36" [illegible]" Wall	48" [illegible]" Wall	—	→	48" [illegible]" Wall	→	36" [illegible]" Wall	48" [illegible]" Wall	—
8	[illegible] To [illegible]	48" [illegible]" Wall	48" [illegible]" Wall	—	—	→	54"-[illegible] Wall	48" [illegible]" Wall	48" [illegible]" Wall	—
9	[illegible] Line	None	48" [illegible]" Wall	—	→	48" [illegible]" Wall	→	None	48" [illegible]" Wall	—
10	[illegible]	Two Con-[illegible]	New 48" [illegible]" Wall Down Pipe			→	54"-[illegible] Wall	Two Con-[illegible]	New 48" [illegible]"	
11	[illegible]	None	12,000	14,000	15,000	18,000	22,000	None	12,000	14,0[illegible]
12	[illegible]	None	Provided As Per Drawing SK-1-3841					None	Provided	
13	[illegible] Line [illegible]	None	60" [illegible]" Wall	—	→	60" [illegible]" Wall	→	None	60" [illegible]" Wall	—
14	Effluent Line ([illegible]	NONE	48"-$\frac{7}{16}$" Wall	—	—	→	54"-$\frac{7}{16}$" Wall	NONE	48"-$\frac{7}{16}$" Wall	—

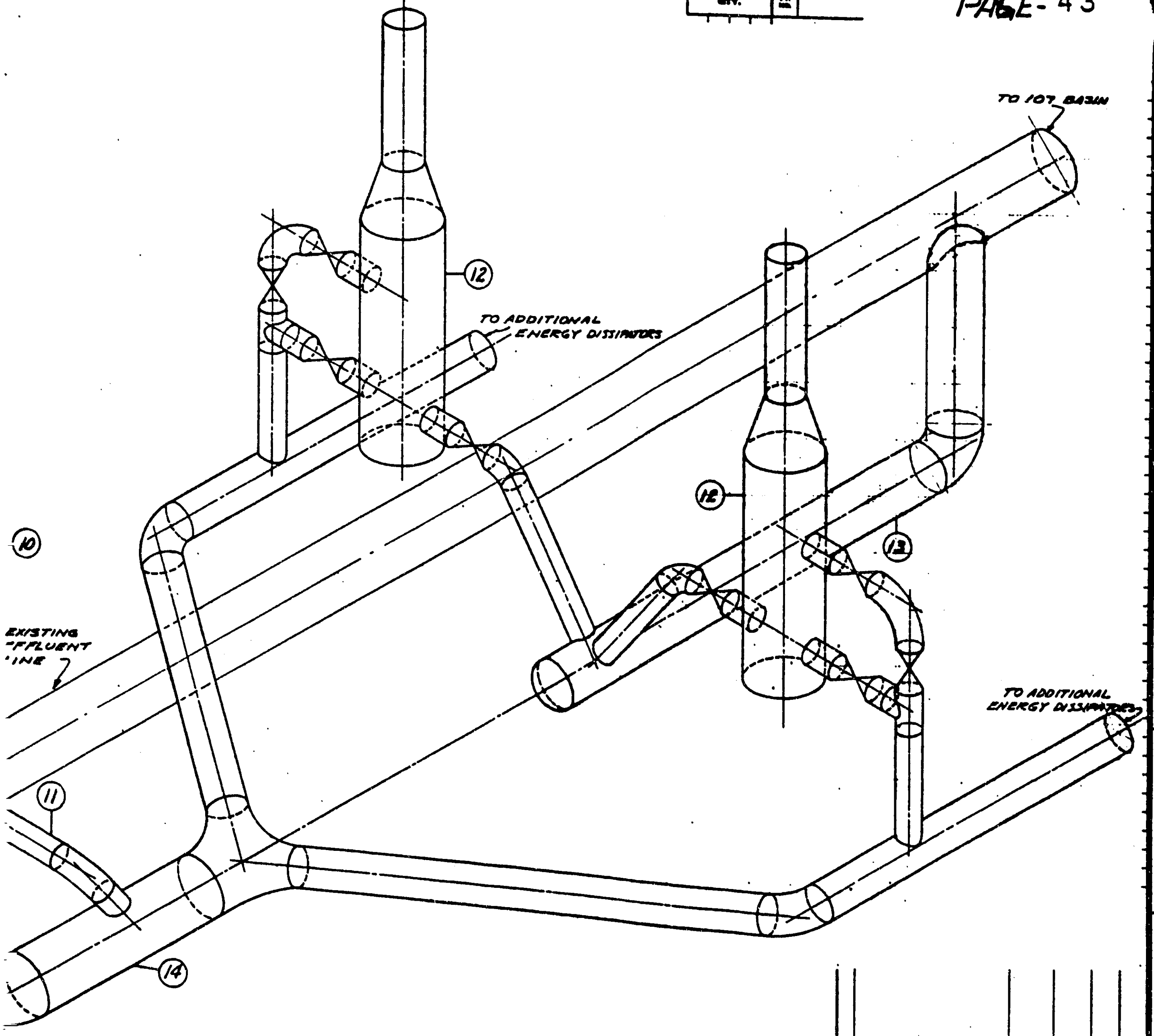

…d Increased Flows For 105°C. …s At "DR" & "H" Reactors. …ed For Following Flows 105,000	115,000	130,000	Recommended Pipe Sizes For Increased Flows For 105°C. Bulk Effluent Temp. At "C" Reactor — Existing Sizes	Sizes Required For Following Flows 93,000	105,000	115,000	130,000
—	—	→	1" Tube	—	—	—	→
—	→	5" Tube	4" Sch. 40	—	—	→	5" Tube
—	→	6" Tube [illegible]	4" Sch. 40	—	—	→	6" Tube
→	48"-3/8" Wall	→	36"-3/8" Wall	—	—	→	48"-5/16" Wall
…Allow Riser To Move			Fixed	Roller Type To Allow Riser To Move			
…Drawing SK-1-3815, 16, 17 & 18 →			None	None →			
→	48"-3/8" Wall	→	36"-3/8" Wall	—	—	→	48"-5/16" Wall
—	→	54"-7/16" Wall	54"-3/8" Wall	—	—	—	→
→	48"-3/8" Wall	→	None	36"-3/8" Wall →		48"-3/8" Wall	→
…Down Pipe →		54"-7/16" Wall	Two Cascade Type	New 54"-5/16" Wall Down Pipe →			
15,000	18,000	22,000	None	14,000	15,000	18,000	22,000
…s Per Drawing SK-1-3841			None	Provided As Per Drawing SK-1-3841			
→	66"-3/8" Wall	→	None	60"-3/8" Wall	→	66"-3/8" Wall	→
—	→	54"-7/16" Wall	NONE	48"-7/16" Wall	—	→	54"-7/16" Wall

RESTRICTED DATA
THIS DOCUMENT CONTAINS RESTRICTED DATA AS DEFINED IN THE ATOMIC ENERGY ACT OF 1954. ITS TRANSMITTAL OR THE DISCLOSURE OF ITS CONTENTS IN ANY MANNER TO AN UNAUTHORIZED PERSON IS PROHIBITED.

REVISIONS

CLASSIFICATION SECRET
CLASSIFIED BY T. Dluzewski
DATE Dec 28, 59

DWG. NO. SK-1-3812 | SHEET NO. 2 | SHEETS 2 | REV. NO. 0

SCALE: NONE
DRAWN [illegible]
CHECKED [illegible]
DES. ENG. MONOT UNIT R&M
WORK NO. 10554
PROJECT NO. DO-1121

APPROVALS
BY [illegible] | FOR CE&U | DATE 1-20-60

U. S. ATOMIC ENERGY COMMISSION
HANFORD ATOMIC PRODUCTS OPERATION
GENERAL ELECTRIC

PROCESS PIPING
FLOW SHEET

REACTOR INCREASE PRODUCTION
BLDG. NO. 105 B,C,D,DR,F,H | INDEX 8401
DWG. NO. SK-1-3812 | SHEET NO. 2 | SHEETS 2

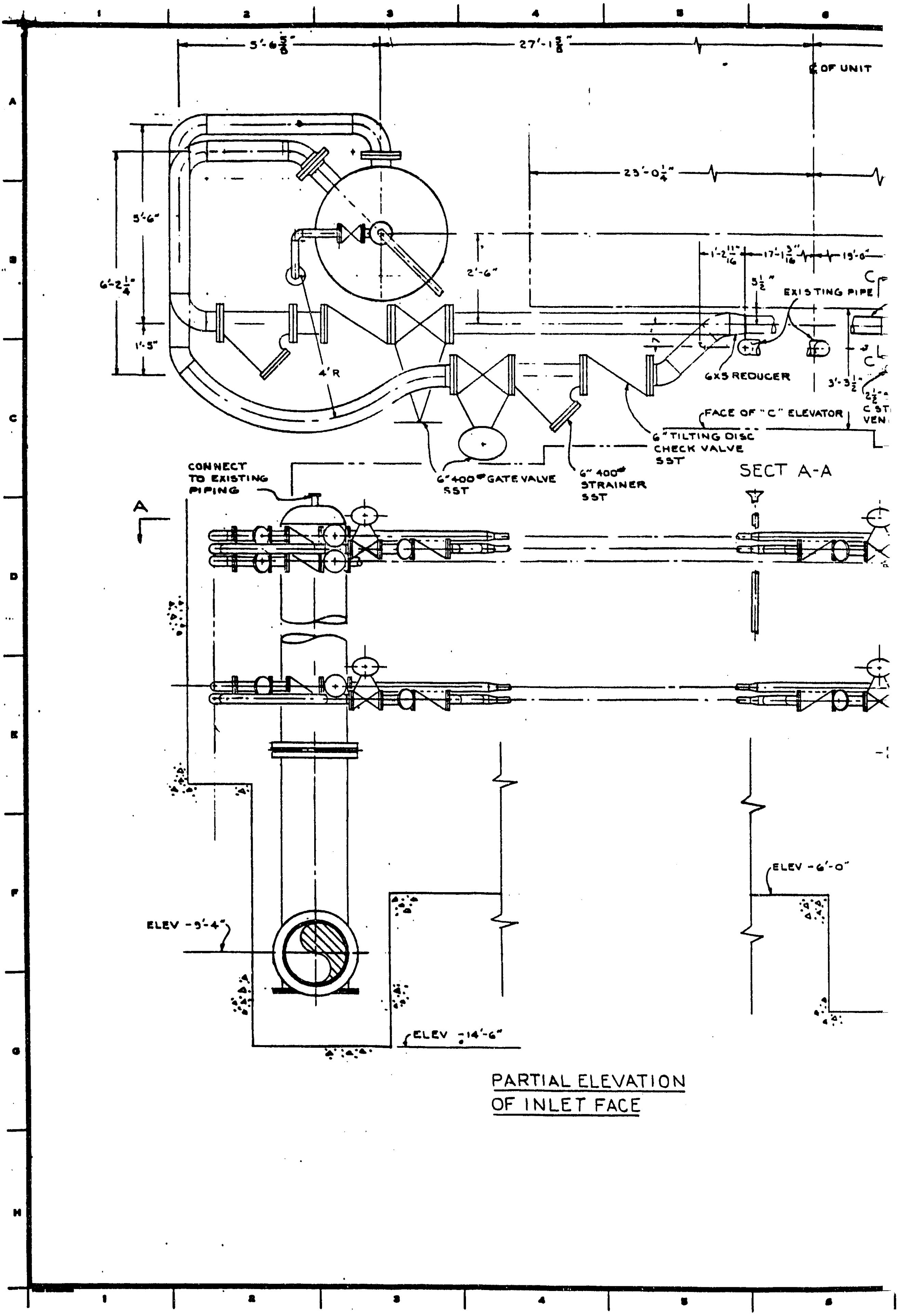
SECT A-A

PARTIAL ELEVATION OF INLET FACE

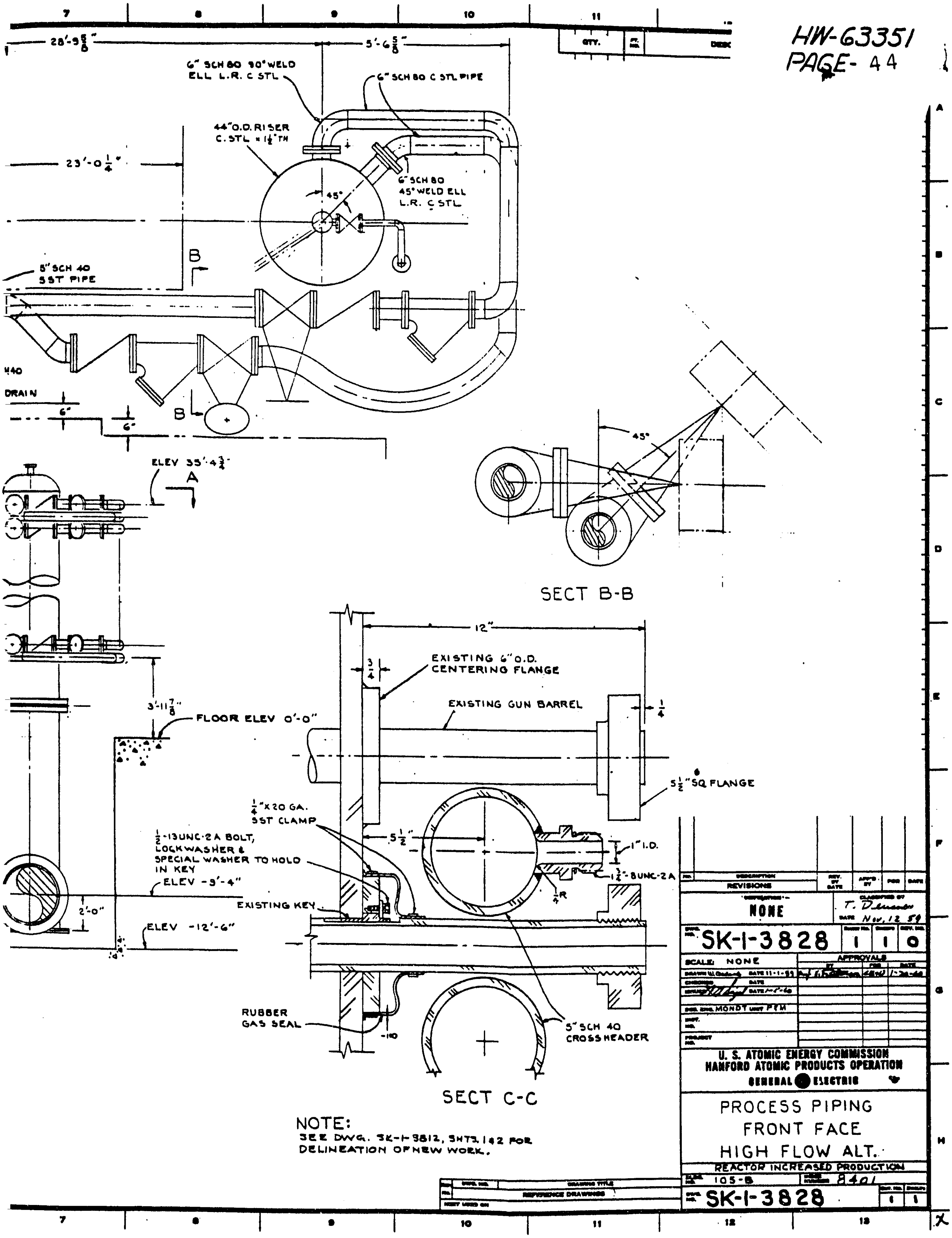

NOTE:
SEE DWG. SK-1-3812, SHTS. 1 & 2 FOR DELINEATION OF NEW WORK.

REVISIONS

NONE

CLASSIFIED BY T. D[illegible]
DATE Nov. 12 59

SK-1-3828 | 1 | 1 | 0

SCALE: NONE

DRAWN W. Clodroch DATE 11-1-59

DATE 1-8-60

MONDT UNIT PFM

APPROVALS 1-20-60

U. S. ATOMIC ENERGY COMMISSION
HANFORD ATOMIC PRODUCTS OPERATION
GENERAL ELECTRIC

PROCESS PIPING
FRONT FACE
HIGH FLOW ALT.

REACTOR INCREASED PRODUCTION

105-B
8401

SK-1-3828 | 1 | 1

REFERENCE DRAWINGS

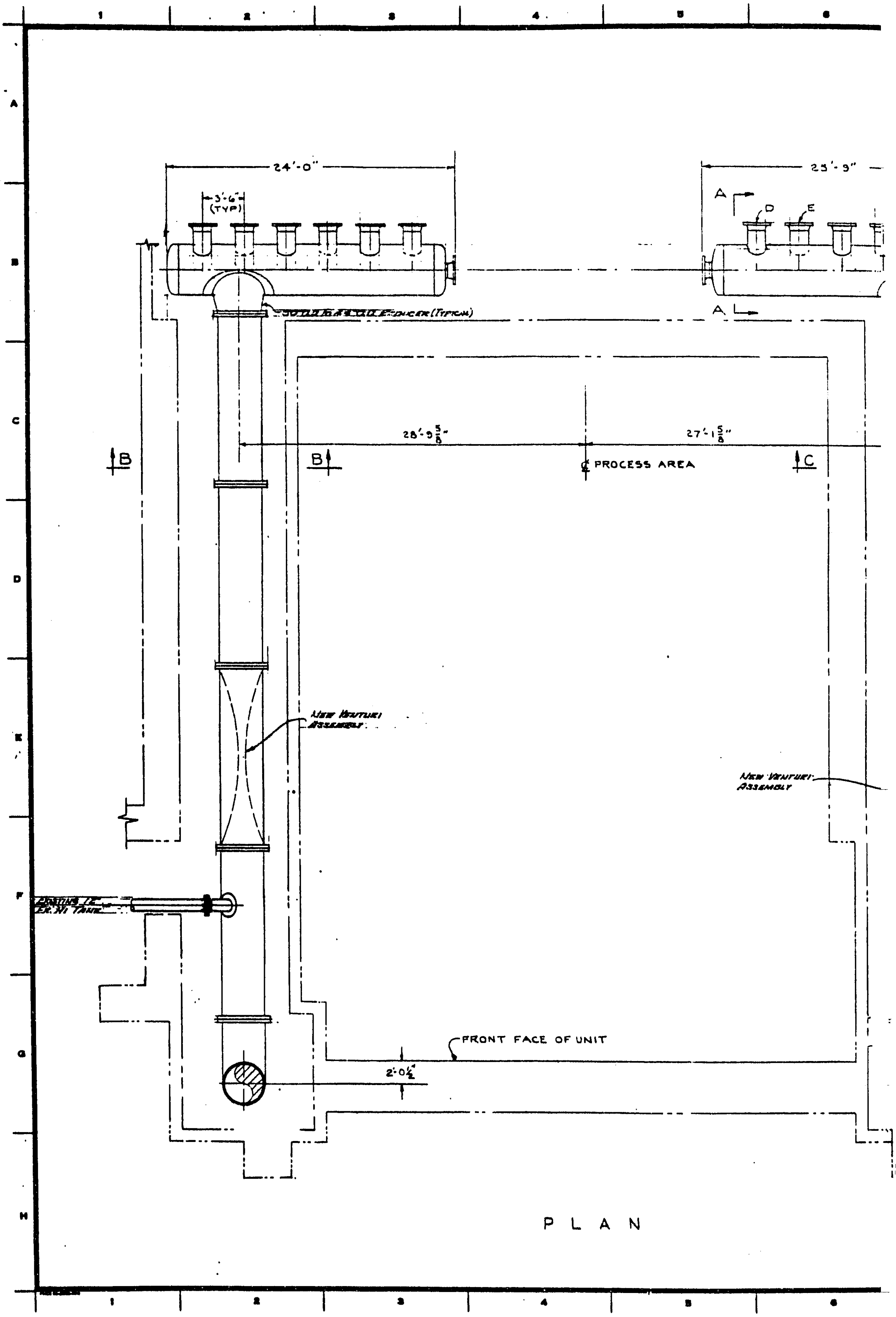
24'-0"
3'-6"
(TYP)
25'-9"
A
D
E
A
REDUCER (TYPICAL)
28'-9 5/8"
27'-1 5/8"
B
B
℄ PROCESS AREA
C
NEW VENTURI ASSEMBLY
NEW VENTURI ASSEMBLY
EXISTING 12"
EX. HI TANK
FRONT FACE OF UNIT
2'-0 1/2"
1
2
3
4
5
6
A
B
C
D
E
F
G
H

PLAN

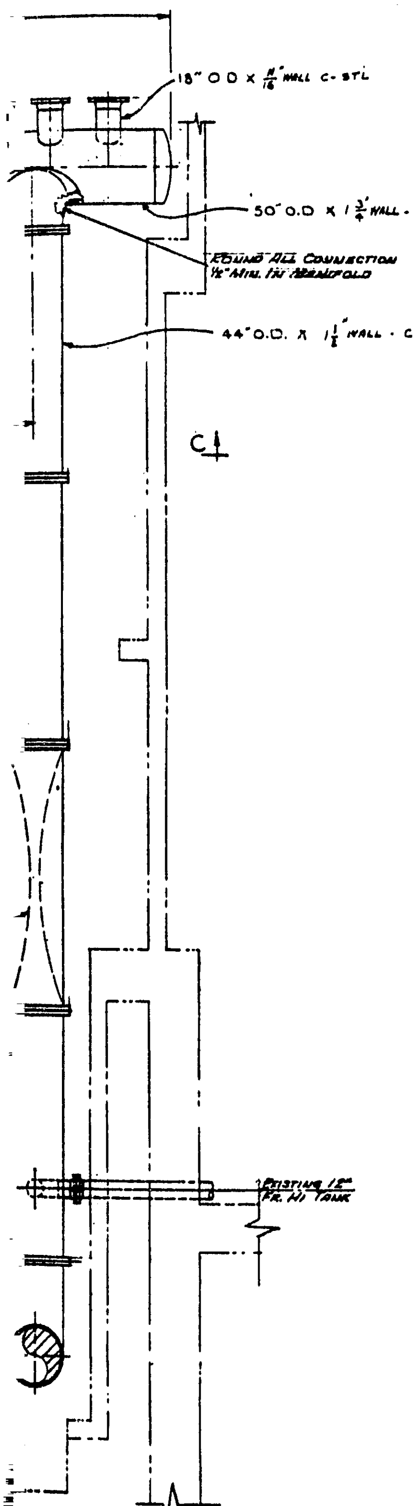

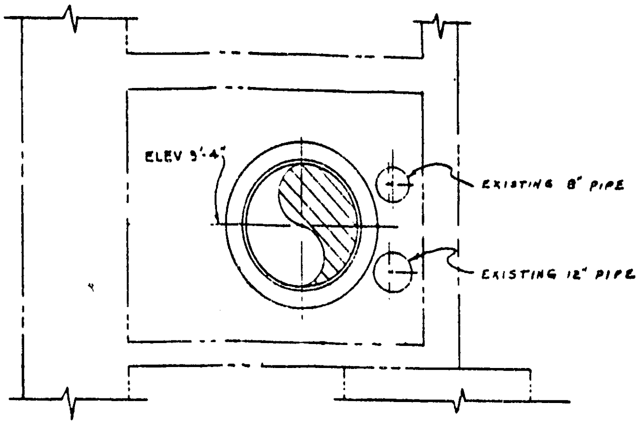

SECT B-B

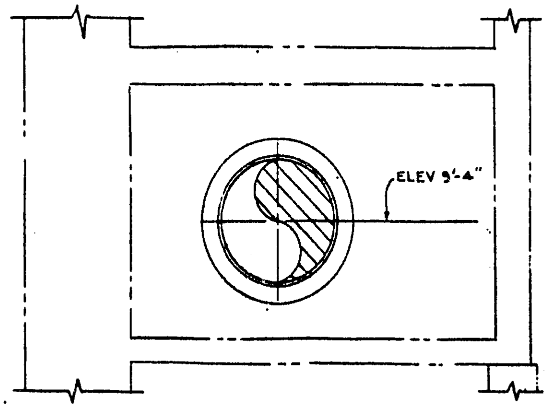

SECT C-C

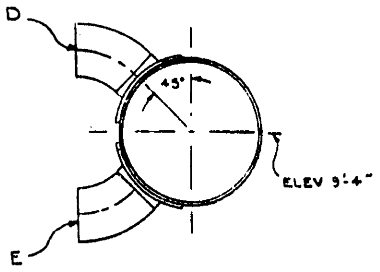

SECT A-A

NOTE:
SEE DWG. SK-1-3812, SHTS 1&2 FOR DELINEATION OF NEW WORK.

REVISIONS

CLASSIFICATION NONE
CLASSIFIED BY T. D[illegible]
DATE Nov. 16 59

DWG. NO. SK-1-3829 | 1 | 1 | 0

SCALE: NONE
APPROVALS
DRAWN W. [illegible] DATE 11-14-59
CHECKED DATE
ISSUED [illegible] DATE 1-5-60
DES. ENG. MONOT UNIT PEM

U. S. ATOMIC ENERGY COMMISSION
HANFORD ATOMIC PRODUCTS OPERATION
GENERAL ELECTRIC

PROCESS PIPING
VALVE PIT ARRGT.
HIGH FLOW ALTERNATE

REACTOR INCREASED PRODUCTION
BLDG. NO. 105-B
8403

DWG. NO. SK-1-3829 | 1 | 1

REFERENCE DRAWINGS

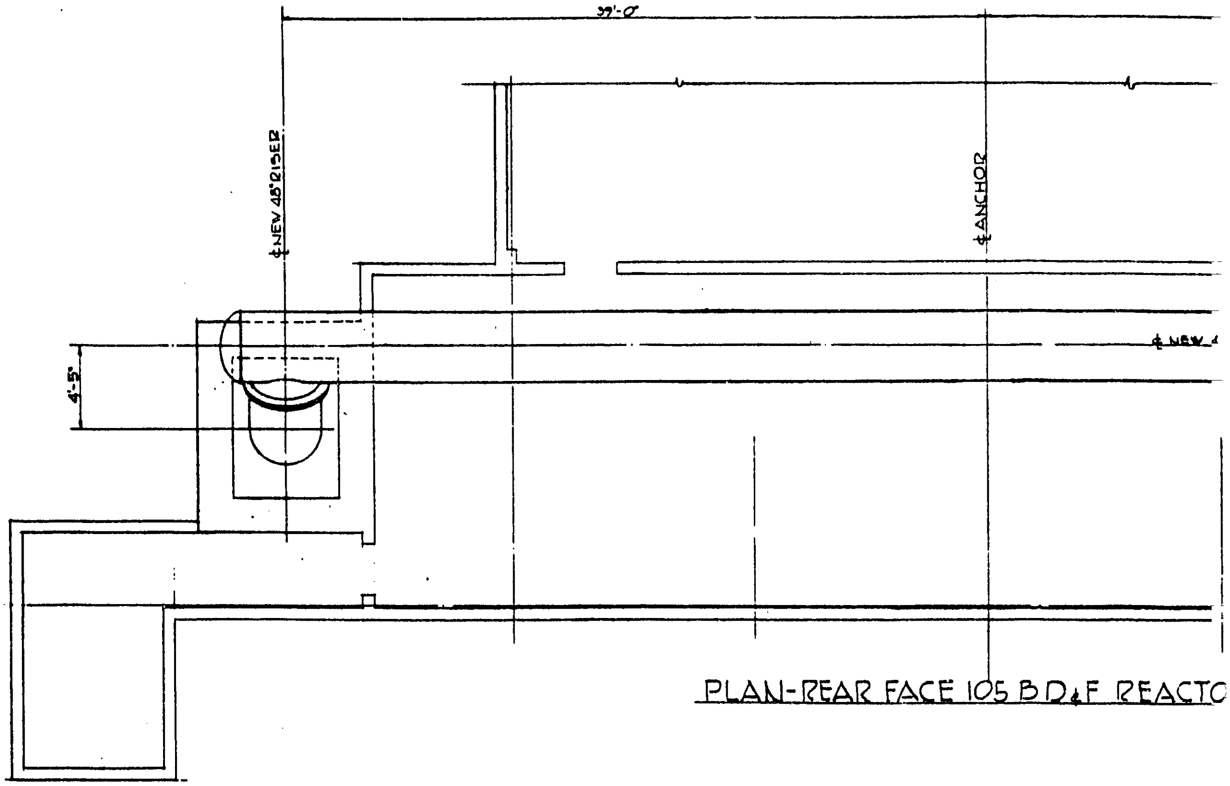

PLAN-REAR FACE 105 B D & F REACTO

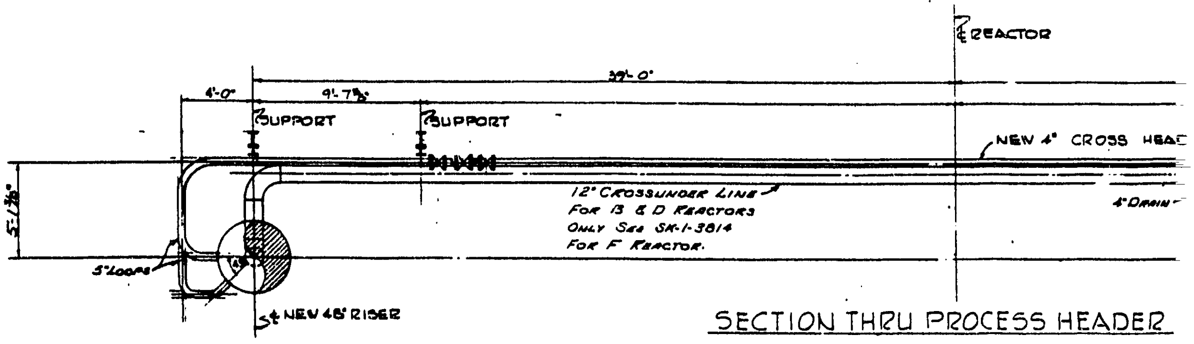

SECTION THRU PROCESS HEADER

HW-63351
PAGE-

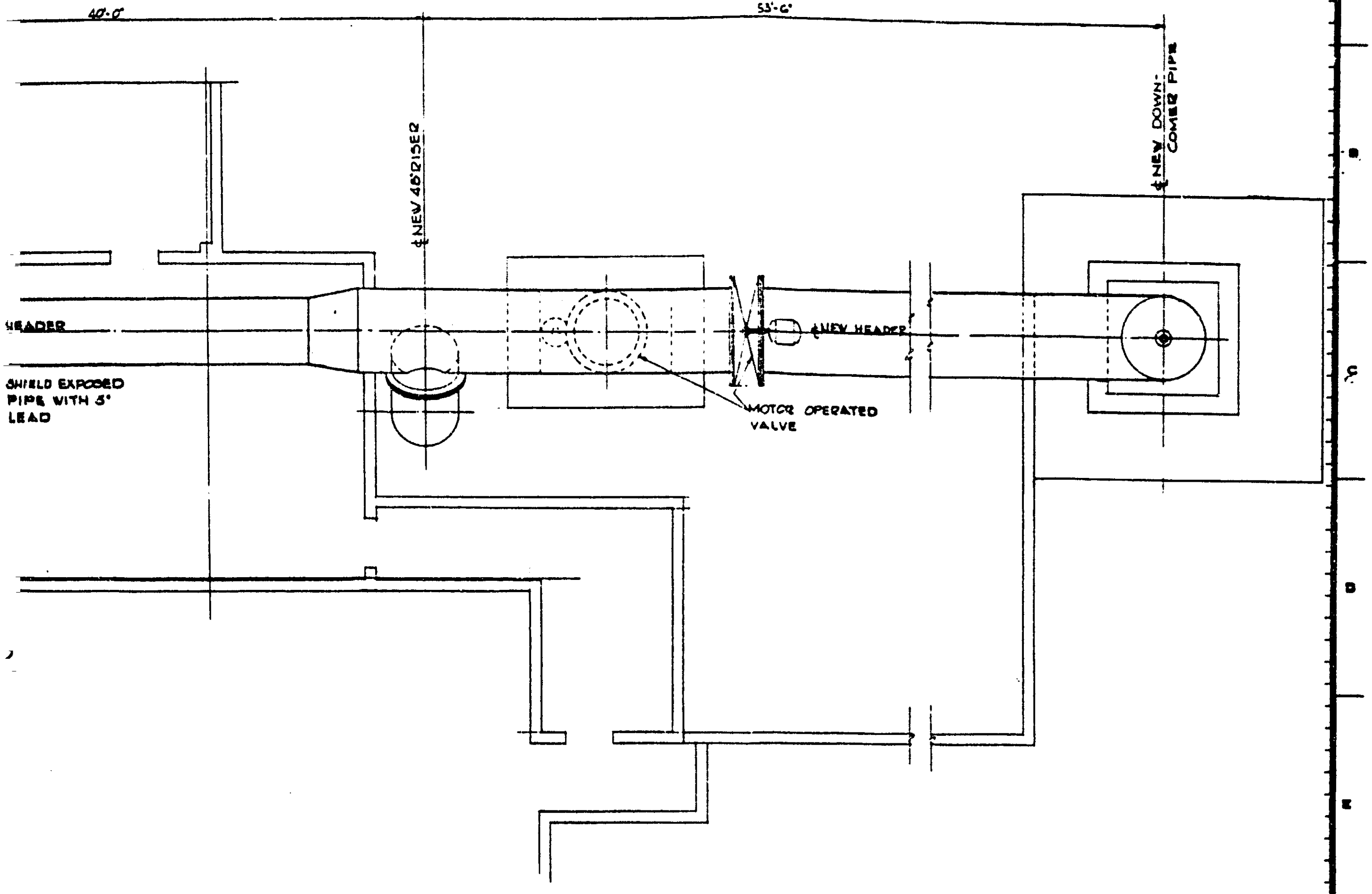

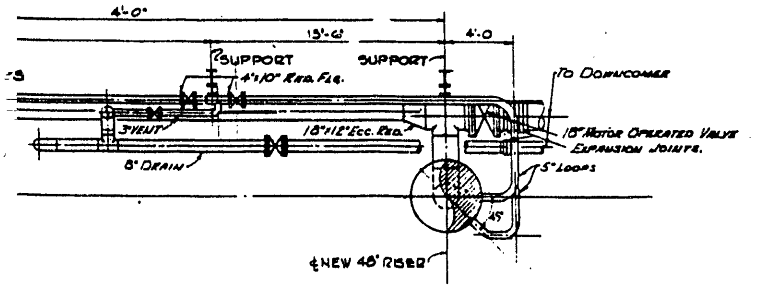

NOTE:
SEE DWG. SK-1-3812, SHT. 2 FOR DELINEATION OF NEW WORK.

REVISIONS

CLASSIFICATION
NONE

DATE 11/2/59

DWG. NO. SK-1-3813 — — 0

SCALE: 1/4" = 1'-0"
APPROVALS
DATE 11-2-59
1-20-60
DATE 1/5/60
V. HILL UNIT P&M
10554
PROJECT NO. DO-1121

U. S. ATOMIC ENERGY COMMISSION
HANFORD ATOMIC PRODUCTS OPERATION
GENERAL ELECTRIC

PROCESS PIPING 105 B D&F
REAR FACE
PRESSURIZATION

REACTOR INCREASED PRODUCTION
105 B D&F
8401
SK-1-3813 — —

REFERENCE DRAWINGS

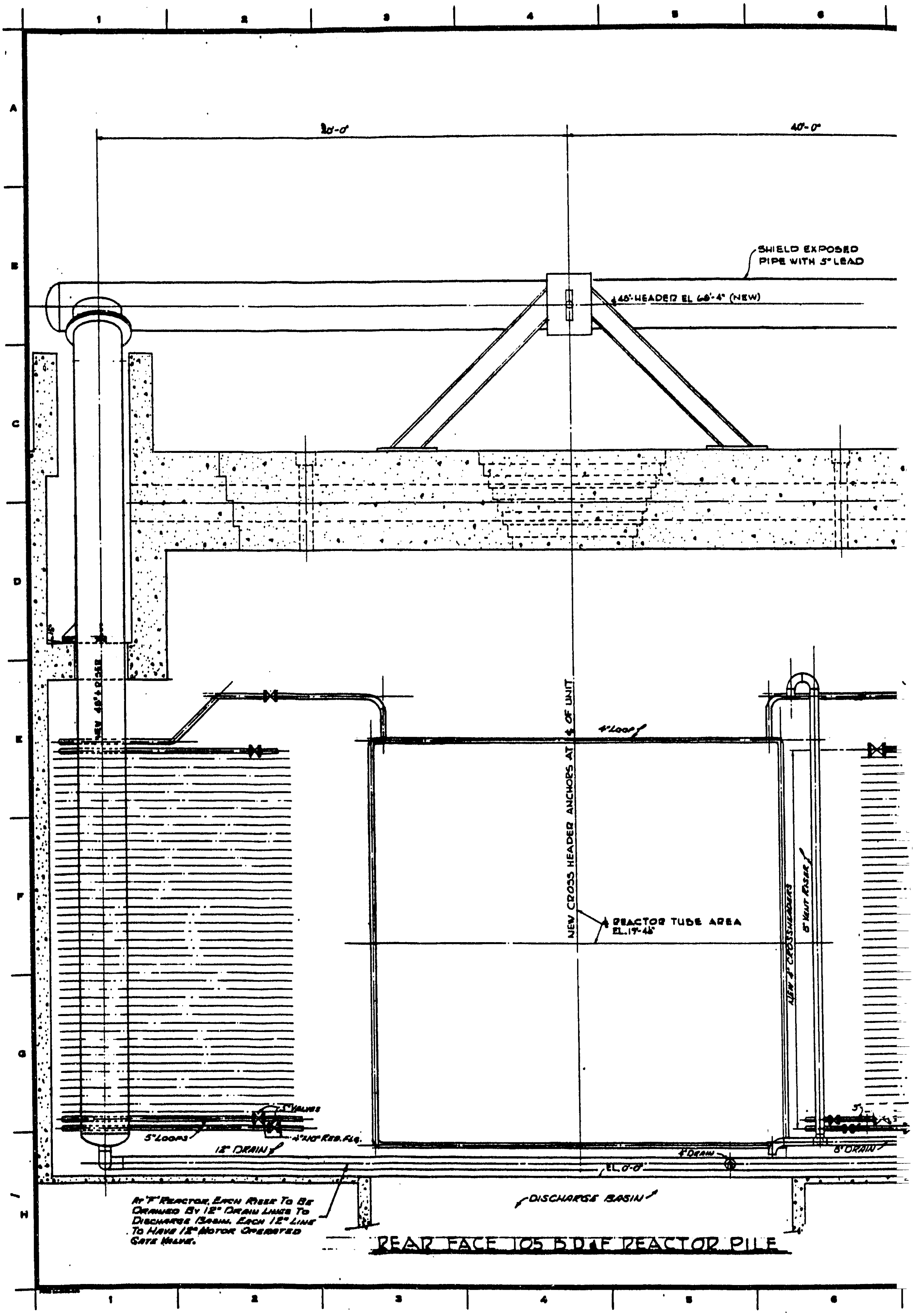

At "F" Reactor, Each Riser To Be Drained By 12" Drain Lines To Discharge Basin. Each 12" Line To Have 12" Motor Operated Gate Valve.

REAR FACE 105 B D & F REACTOR PILE

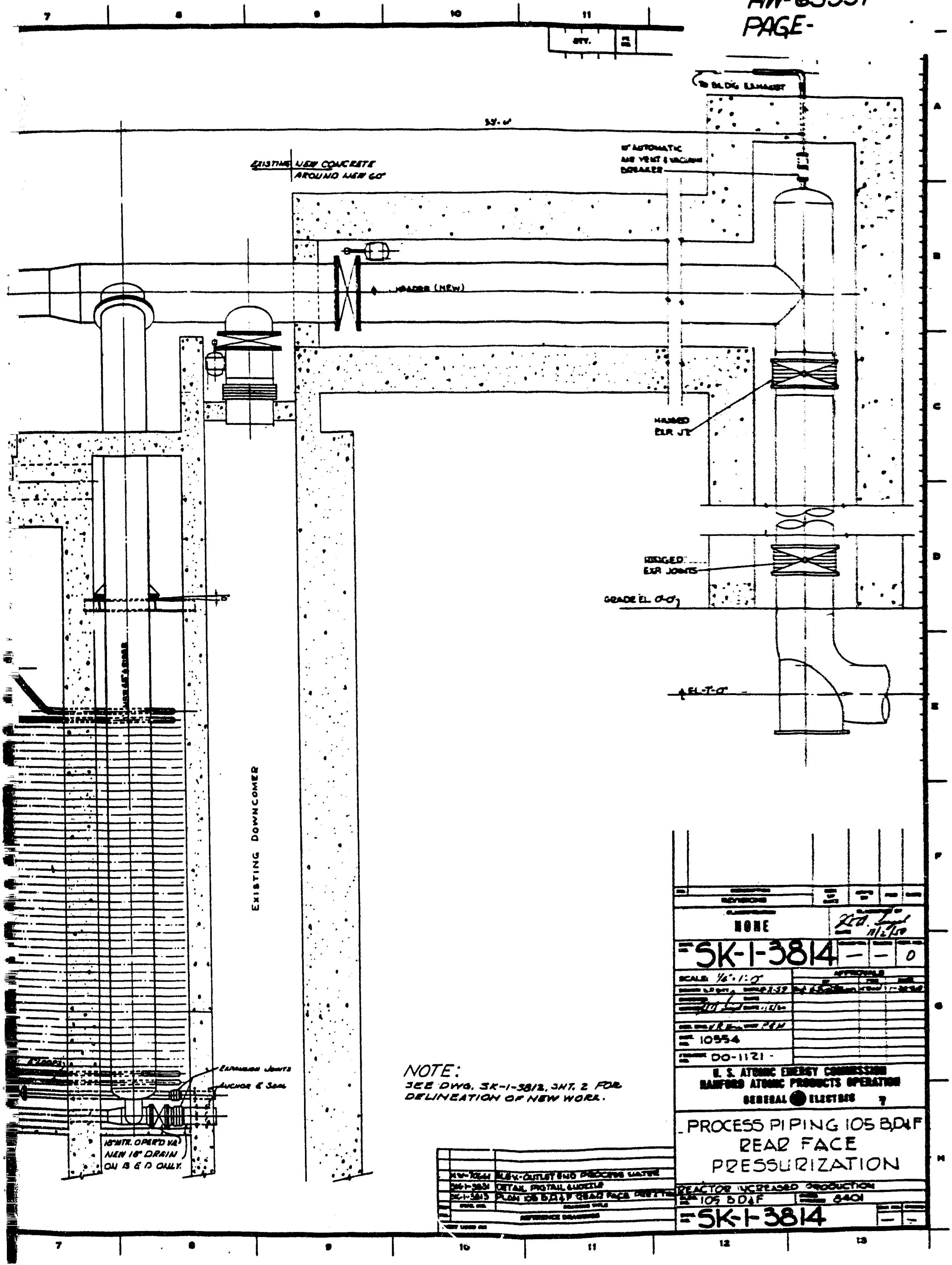

NOTE:
SEE DWG. SK-1-3812, SHT. 2 FOR
DELINEATION OF NEW WORK.

NONE

SK-1-3814 — — 0

SCALE 1/8" = 1'-0"

10554

DO-1121 -

U. S. ATOMIC ENERGY COMMISSION
HANFORD ATOMIC PRODUCTS OPERATION
GENERAL ELECTRIC

PROCESS PIPING 105 B,D & F
REAR FACE
PRESSURIZATION

REACTOR INCREASED PRODUCTION
105 B D & F | 8401

SK-1-3814

REFERENCE DRAWINGS

HW-[illegible]	ELEV. - OUTLET END PROCESS WATER
SK-1-3831	DETAIL PIGTAIL & NOZZLE
SK-1-3815	PLAN 105 B,D & F REAR FACE [illegible]

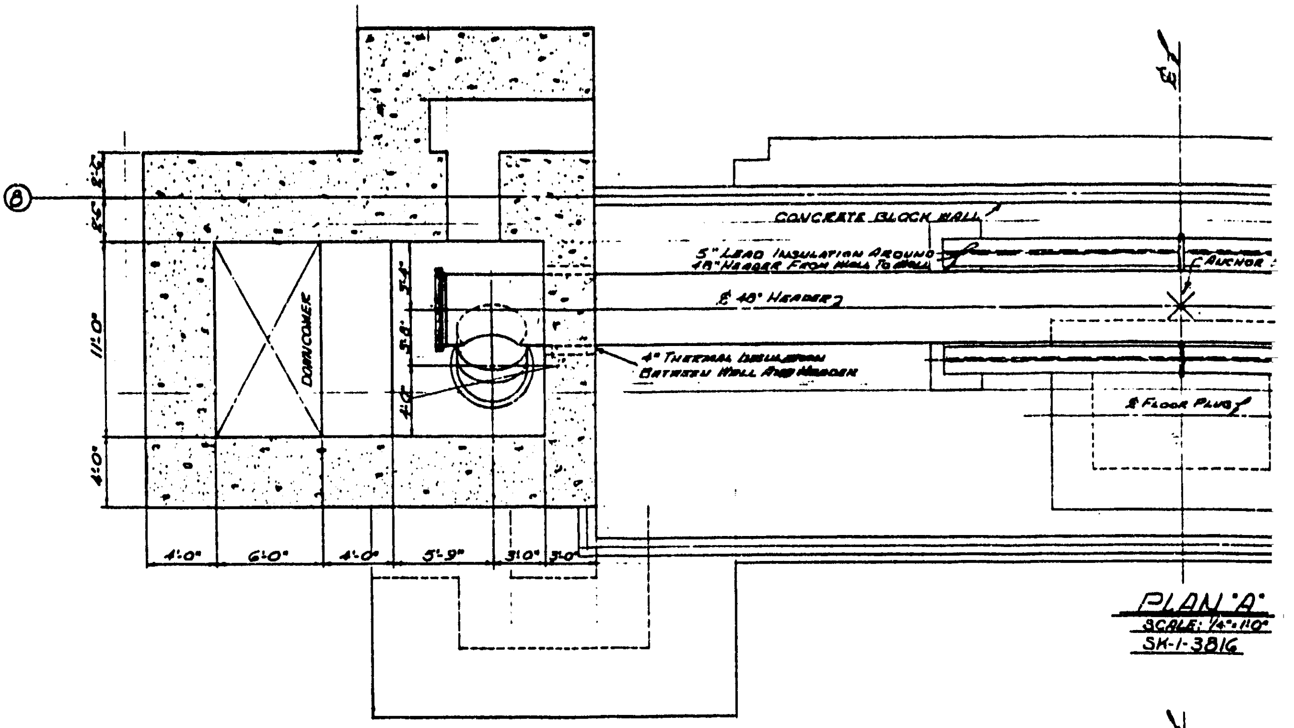

PLAN "A"
SCALE: 1/4"=1'-0"
SK-1-3816

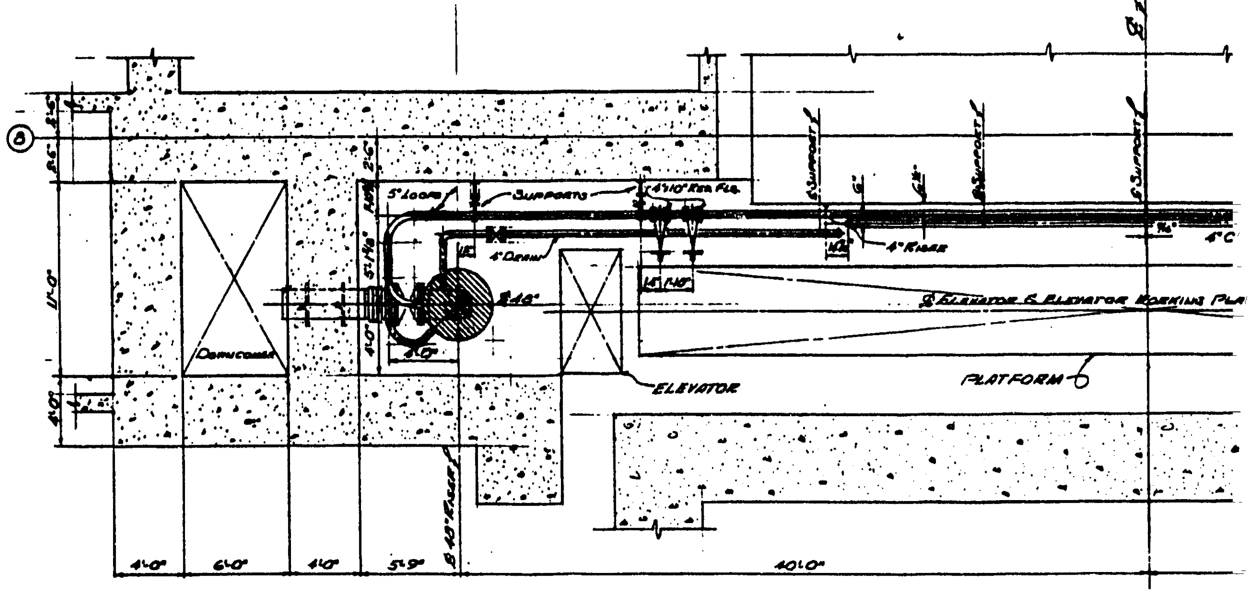

PLAN "B"
SCALE: 1/4"=1'-0"
SK-1-3816

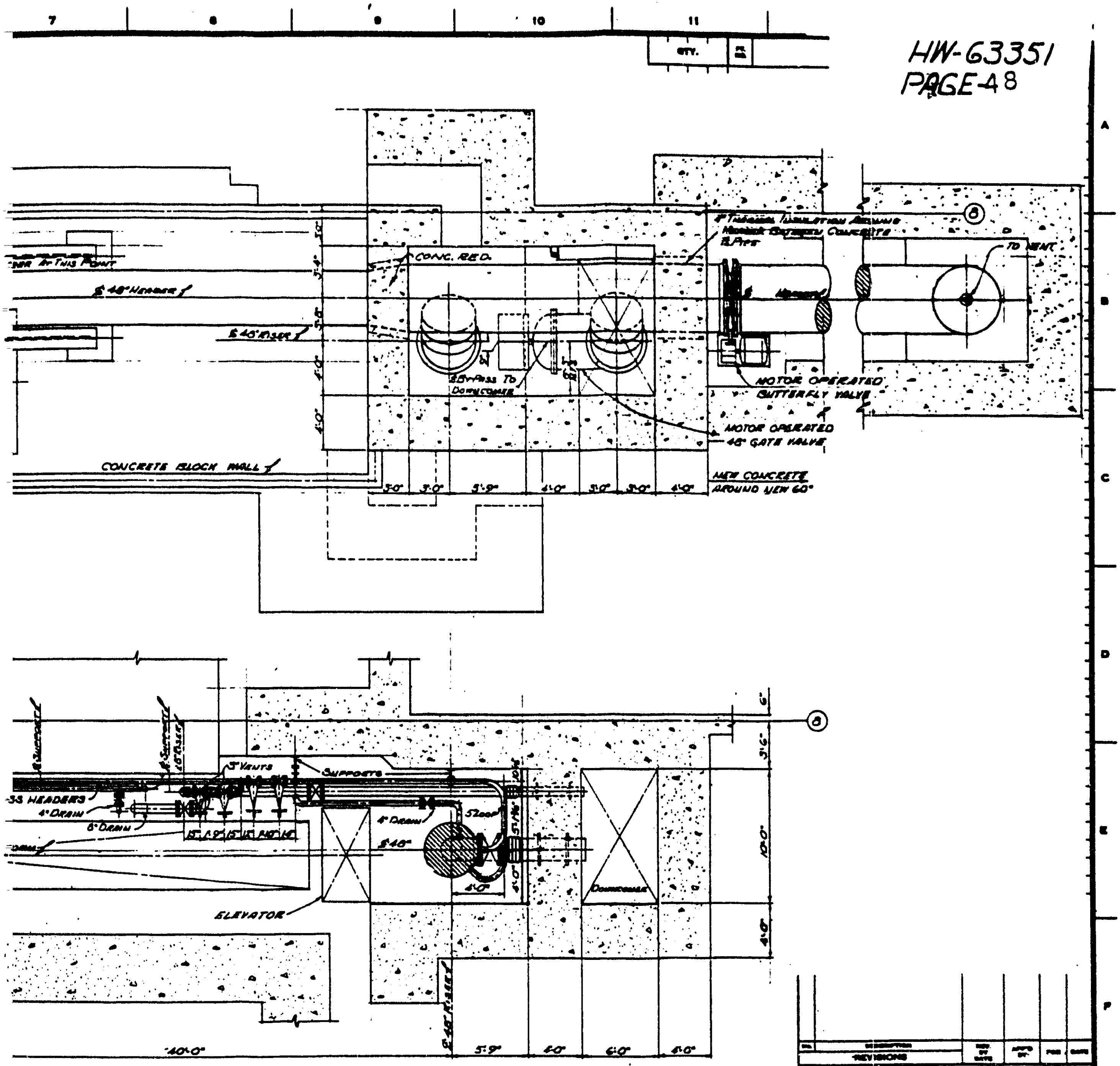

NOTE:
SEE DWG. SK-1-3812, SHT. 2 FOR
DELINEATION OF NEW WORK.

9	HW-71486 -	Details Superstructure - Process Area
8	HW-71487 -	Sections At Elev 56'4"
7	H-1- -	Key Plan
6	H-1-8467 -	Sections
5	H-1-8465 -	Sections & Details
4	HW-73334	Ground Floor Plan
3	H-1-8463 -	Concrete Plan At Elev 56'4"
2	H-1-6048 -	Arrgt. Elev. Outlet Eng.
1	H-1-10908	Process Water Piping Arrgt. Plan
NO.	DWG. NO.	DRAWING TITLE
NO.	REFERENCE DRAWINGS	

NEXT USED ON SK-1-3816 - Sections - DR Rear Face

REVISIONS

CLASSIFICATION NONE

CLASSIFIED BY D.A. Engel DATE 11/2/59

DWG. NO. SK-1-3815 ~ ~ 0

SCALE: 1/16" = 1'-0"

APPROVALS

DRAWN [illegible] DATE [illegible] | [illegible] | CPM | 1-30-60

CHECKED DATE

APPROVED D.A. Engel DATE 11-3-59

RES. ENG. HILL UNIT [illegible]

DWG. NO. 10554

PROJECT NO. DO-1121

U. S. ATOMIC ENERGY COMMISSION
HANFORD ATOMIC PRODUCTS OPERATION
GENERAL ELECTRIC

PROCESS PIPING
REAR FACE PRESSURIZATION

REACTOR INCREASED PRODUCTION

BLDG. NO. 105 DR | 8401

DWG. NO. SK-1-3815 ~ ~

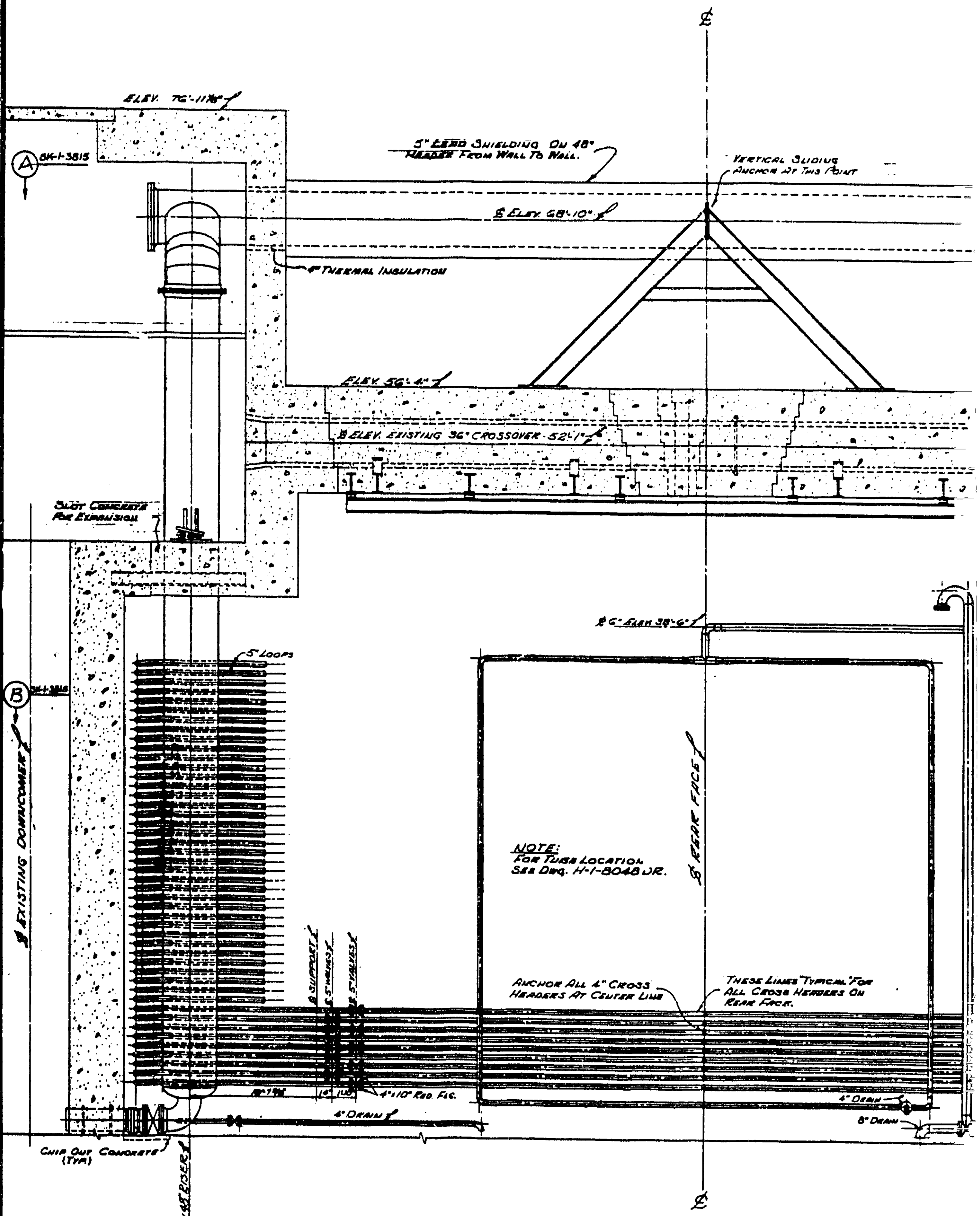
ELEV. 76'-11⅛"
A
SK-1-3815
5" LEAD SHIELDING ON 48" HEADER FROM WALL TO WALL.
VERTICAL SLIDING ANCHOR AT THIS POINT
℄ ELEV. 68'-10"
4" THERMAL INSULATION
ELEV. 56'-4"
℄ ELEV. EXISTING 36" CROSSOVER 52'-1"
SLOT CONCRETE FOR EXPANSION
℄ 6" ELEV. 38'-6"
5" LOOPS
B
SK-1-3815
℄ EXISTING DOWNCOMER
NOTE: FOR TUBE LOCATION SEE DWG. H-1-8048 JR.
℄ REAR FACE
℄ SUPPORT
℄ 5" VALVES
℄ 5" VALVES
ANCHOR ALL 4" CROSS HEADERS AT CENTER LINE
THESE LINES "TYPICAL" FOR ALL CROSS HEADERS ON REAR FACE.
14"
4" x 10" RED. FLG.
4" DRAIN
4" DRAIN
8" DRAIN
CHIP OUT CONCRETE (TYP)
℄ NEW 48" RISER
℄
℄

ELEVATION

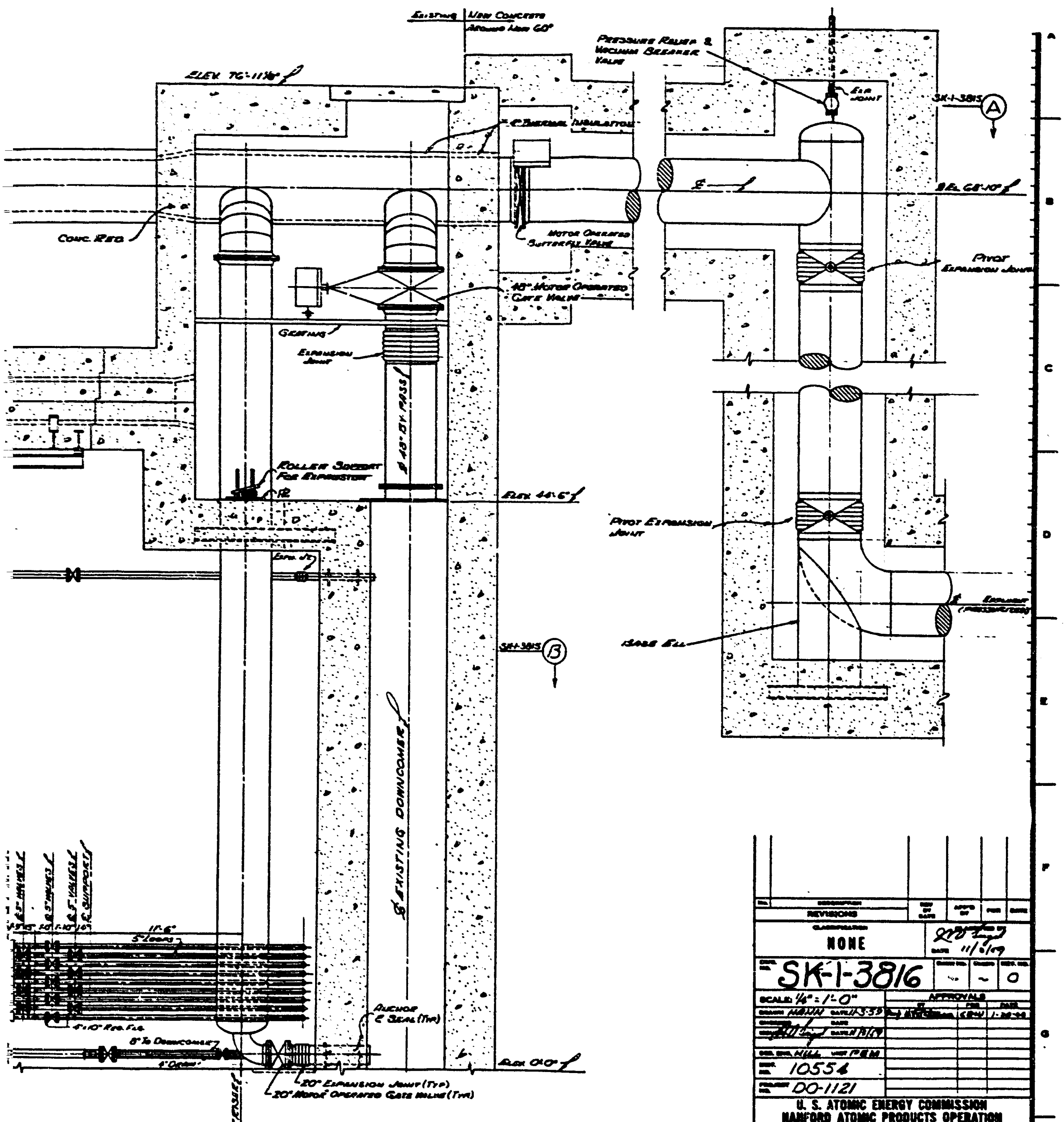

TE:
E DWG. SK-1-3812, SHT. 2
- DELINEATION OF NEW WORK.

9	HW-71486	DETAILS-SUBSTRUCTURES-PROCESS AREA
8	HW-71487-	SECTIONS AT EL 56'-4"
7	H-1-	KEY PLAN
6	H-1-8467-	SECTIONS
5	H-1-8465-	SECTIONS & DETAILS
4	HW-73336-	GROUND FLOOR PLAN
3	H-1-8451-	CONCRETE PLAN AT EL 56'-4"
2	H-1-8048-	ARRGT. ELEV. OUTLET END
1	H-1-81090R	PROCESS WATER PIPING ARRGT. PLANS
NO.	DWG. NO.	DRAWING TITLE

REFERENCE DRAWINGS

NEXT USED ON SK-1-3815-PLAN-REAR FACE

NO.	DESCRIPTION	REV. BY DATE	APP'D BY	PCR	DATE

REVISIONS

CLASSIFICATION
NONE

CLASSIFIED BY JRB Engel
DATE 11/6/59

DWG. NO. SK-1-3816 | SHEET NO. ~ | CHANGE ~ | REV. NO. 0

SCALE: ¼" = 1'-0"
DRAWN MANN DATE 11-3-59
CHECKED DATE
APPROVED JRB Engel DATE 11/6/59
DES. ENG. HILL UNIT PEM
INDEX NO. 10554
PROJECT NO. DO-1121

APPROVALS BY	PER	DATE
[illegible]	CPW	1-26-59

U. S. ATOMIC ENERGY COMMISSION
HANFORD ATOMIC PRODUCTS OPERATION
GENERAL ELECTRIC
4

PROCESS PIPING
REAR FACE PRESSURIZATION

REACTOR INCREASED PRODUCTION
BLDG. NO. 105DR
INDEX NO. 0401
DWG. NO. SK-1-3816 | SHEET NO. ~ | CHANGE ~

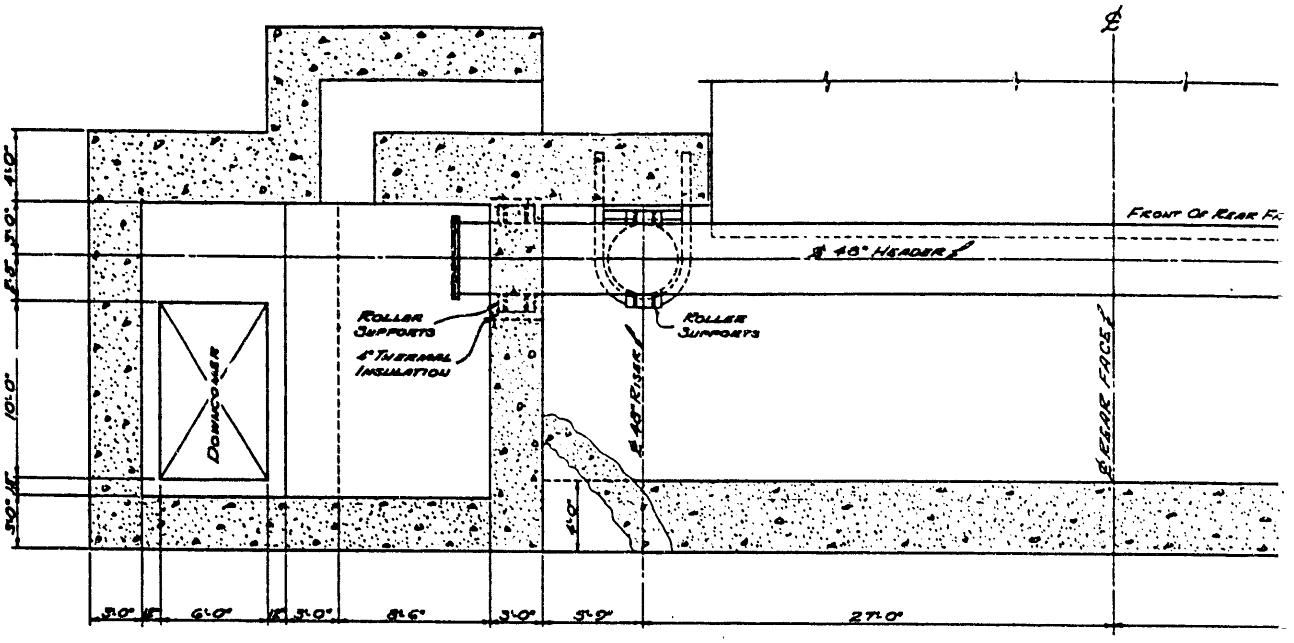

PLAN "A-A"

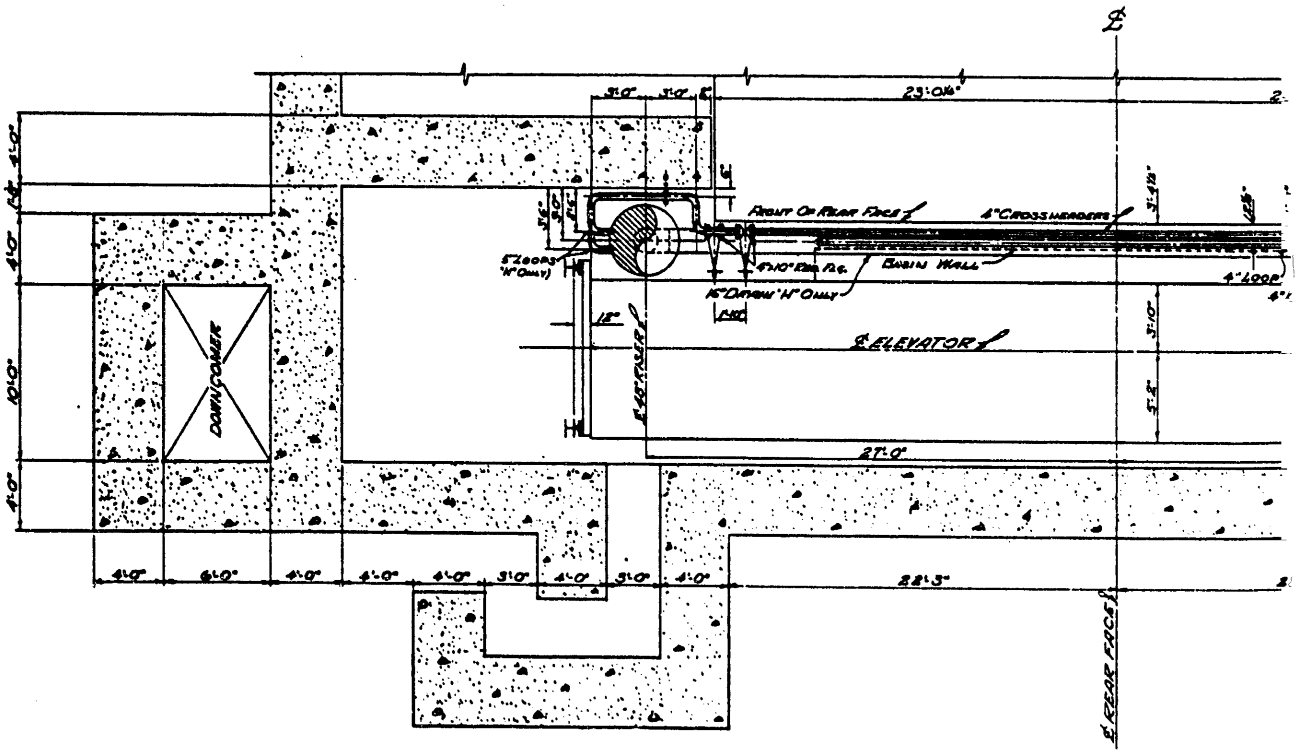

PLAN "B-B"

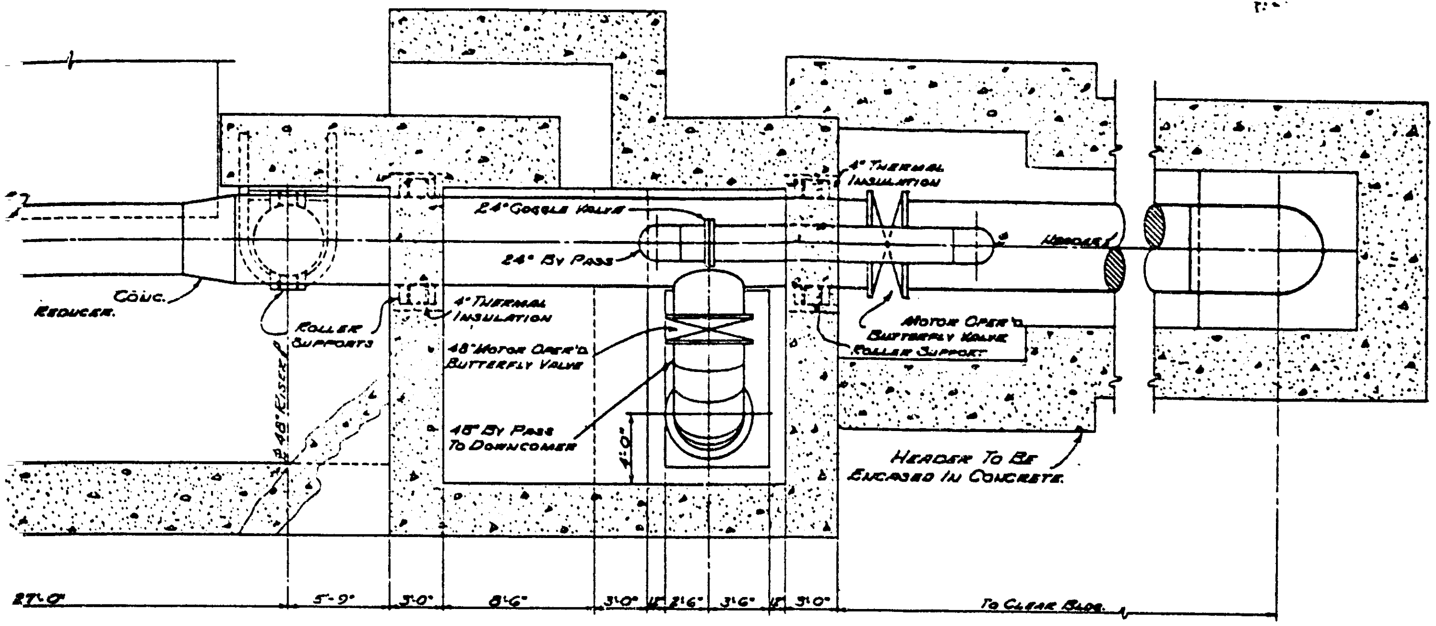

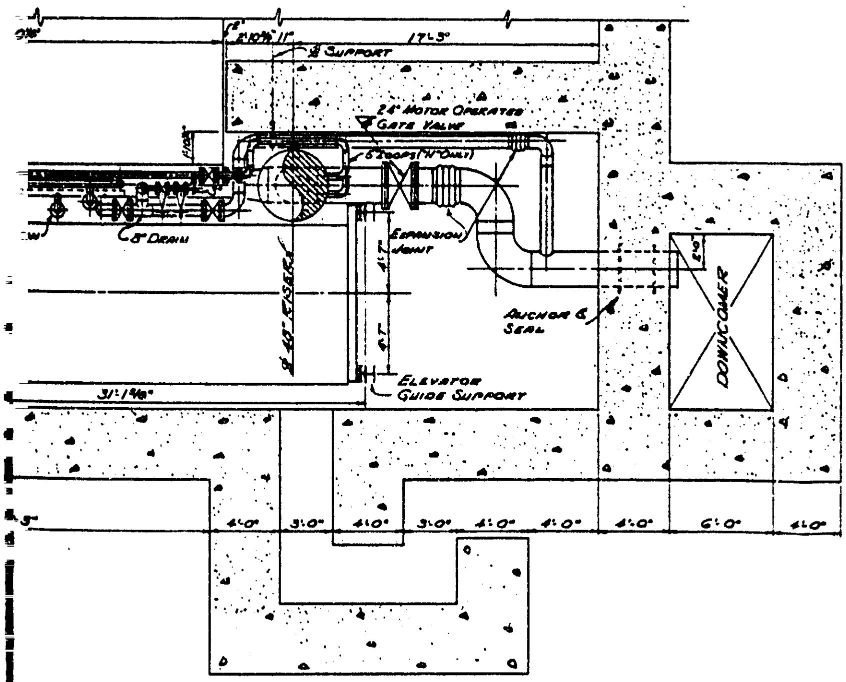

NOTE:
SEE DWG. SK-1-3812, SHT. 2 FOR DELINEATION OF NEW WORK.

REVISIONS

NONE

A.T. Seigel 11/24/59

SK-1-3817 ~ ~ 0

SCALE 1/4" = 1'-0"

APPROVALS

DRAWN HANAF DATE 11-21-59

V. HALL P.E.M.

10554

DO-1121

U. S. ATOMIC ENERGY COMMISSION
HANFORD ATOMIC PRODUCTS OPERATION
GENERAL ELECTRIC

PROCESS PIPING
REAR FACE PRESSURIZATION

REACTOR INCREASED PRODUCTION

105 H & C 8401

SK-1-3817 ~

REFERENCE DRAWINGS

SK-1-3818-ELEVATION-REAR FACE PIPING

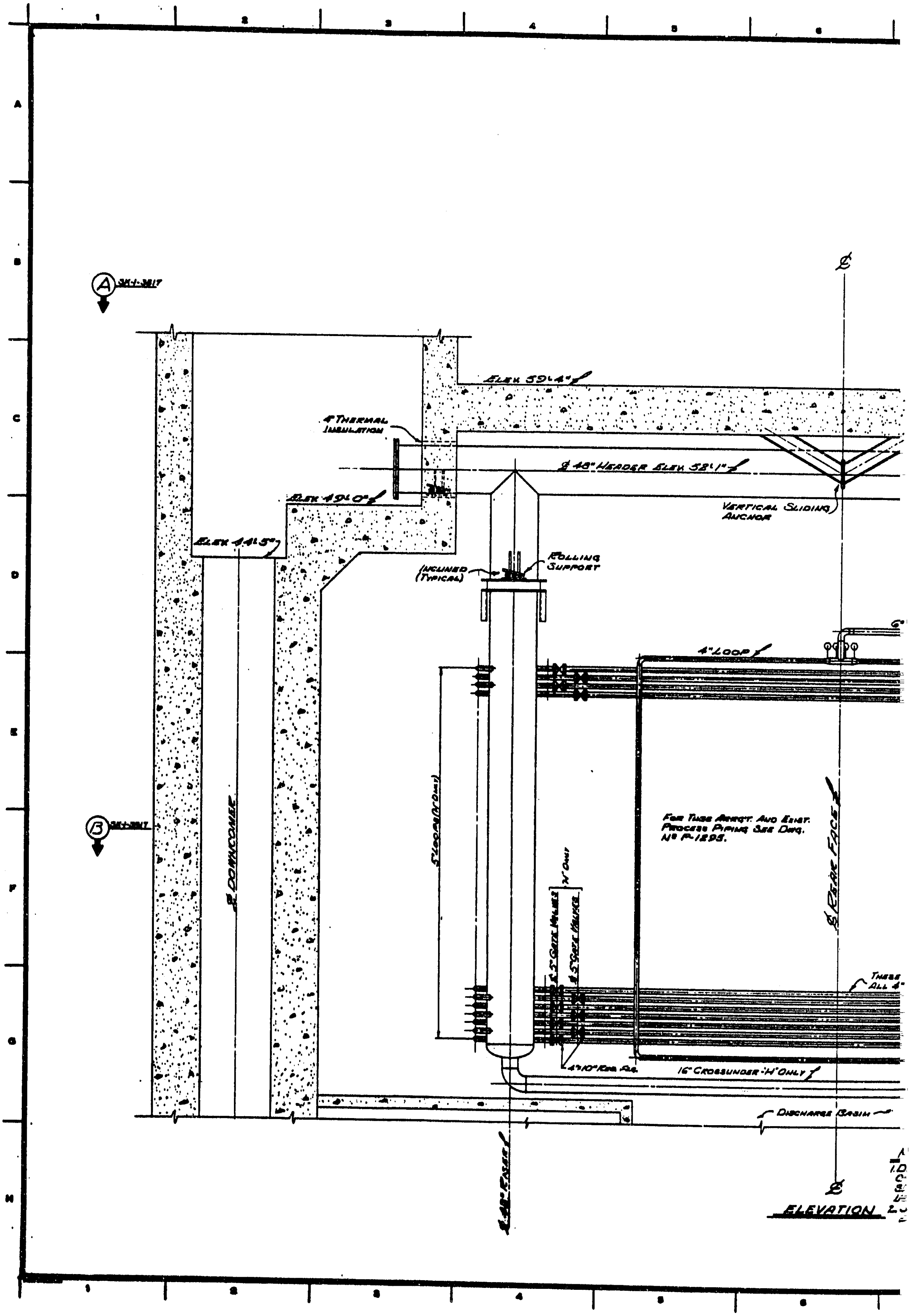
1
2
3
4
5
6
A
B
C
D
E
F
G
H
A SK-1-3817
B SK-1-3817
℄
ELEV 59'-4"
4" THERMAL INSULATION
℄ 48" HEADER ELEV. 58'-1"
ELEV 49'-0"
VERTICAL SLIDING ANCHOR
ELEV 44'-5"
INCLINED (TYPICAL)
ROLLING SUPPORT
℄ DOWNCOMER
4" LOOP
5 LOOPS ('H' ONLY)
'H' ONLY
℄ 5" GATE VALVES
℄ 5" GATE VALVES
FOR TUBE ARRGT. AND EXIST. PROCESS PIPING SEE DWG. Nº P-1295.
℄ REAR FACE
THESE ALL 4"
4"x10" RED. FLG.
16" CROSSUNDER 'H' ONLY
DISCHARGE BASIN
℄ 48" RISER

ELEVATION

HW-63351
PAGE 31

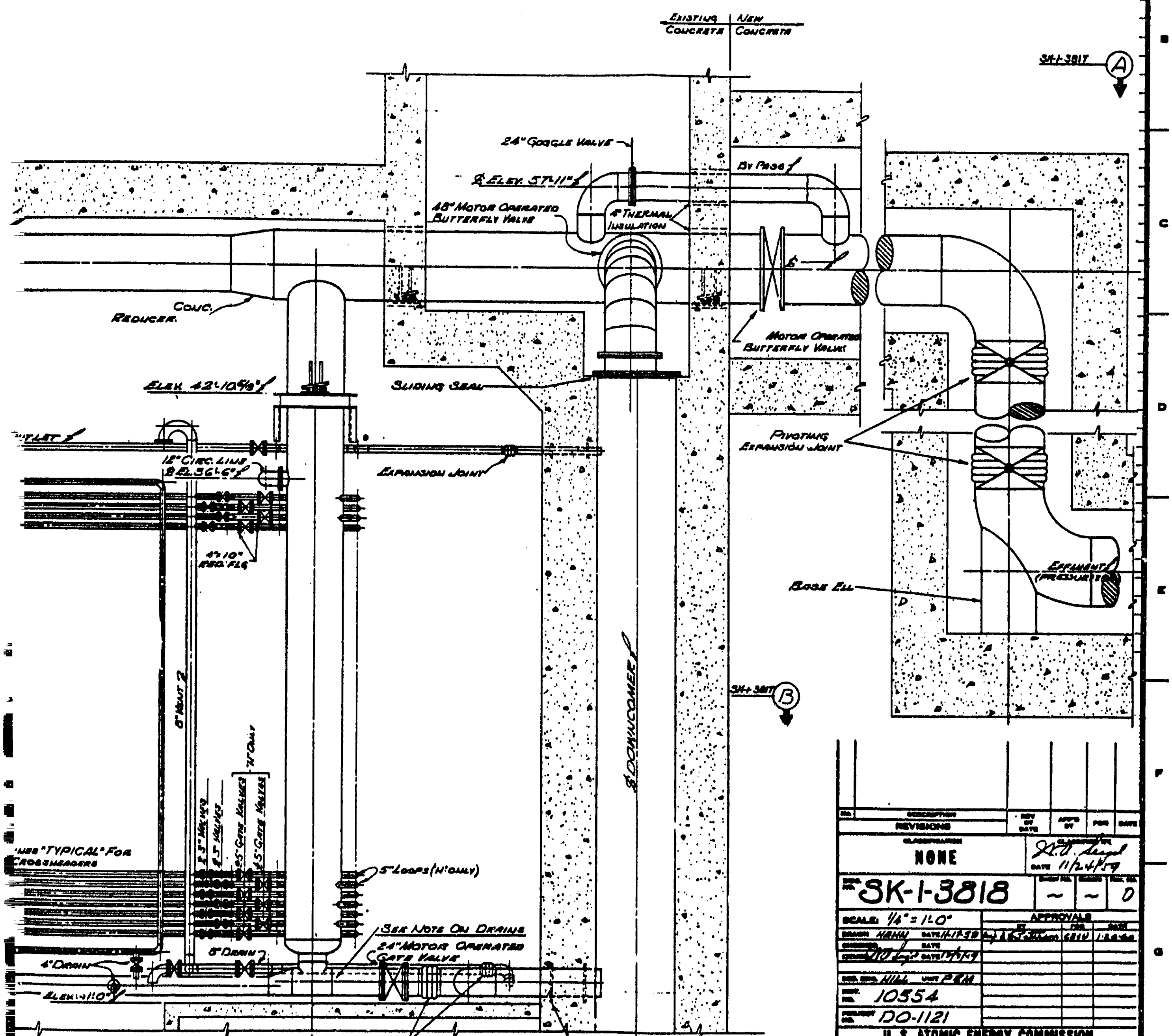

OTES:
AIN LINES ON 48" RISERS AS SHOWN
DRAWINGS SK-1-3817, SK-1-3818 &
-1-3824 TO APPLY TO H-REACTOR ONLY.
EXISTING DRAINS ON C-REACTOR.
E DWG. SK-1-3812, SHT. 2 FOR
LINEATION OF NEW WORK.

REVISIONS

CLASSIFICATION
NONE

CLASSIFIED BY H. V. Seigel
DATE 11/24/59

DWG. NO. SK-1-3818 ~ ~ 0

SCALE: 1/4" = 1'-0"
DRAWN HAHN DATE 11-17-59
CHECKED DATE
CERTIFIED D.O. Lyr DATE 12/4/59
DES. ENG. HILL UNIT PRM
NO. 10554
NO. DO-1121

APPROVALS
BY: R.E.S. Johnson FOR: CEIU DATE: 1-26-60

U. S. ATOMIC ENERGY COMMISSION
HANFORD ATOMIC PRODUCTS OPERATION
GENERAL ELECTRIC

PROCESS PIPING
REAR FACE PRESSURIZATION

REACTOR INCREASED PRODUCTION
105 H & C 8401
SK-1-3818 ~ ~

REFERENCE DRAWINGS
SK-1-3817 - PLANS - REAR FACE PRESS

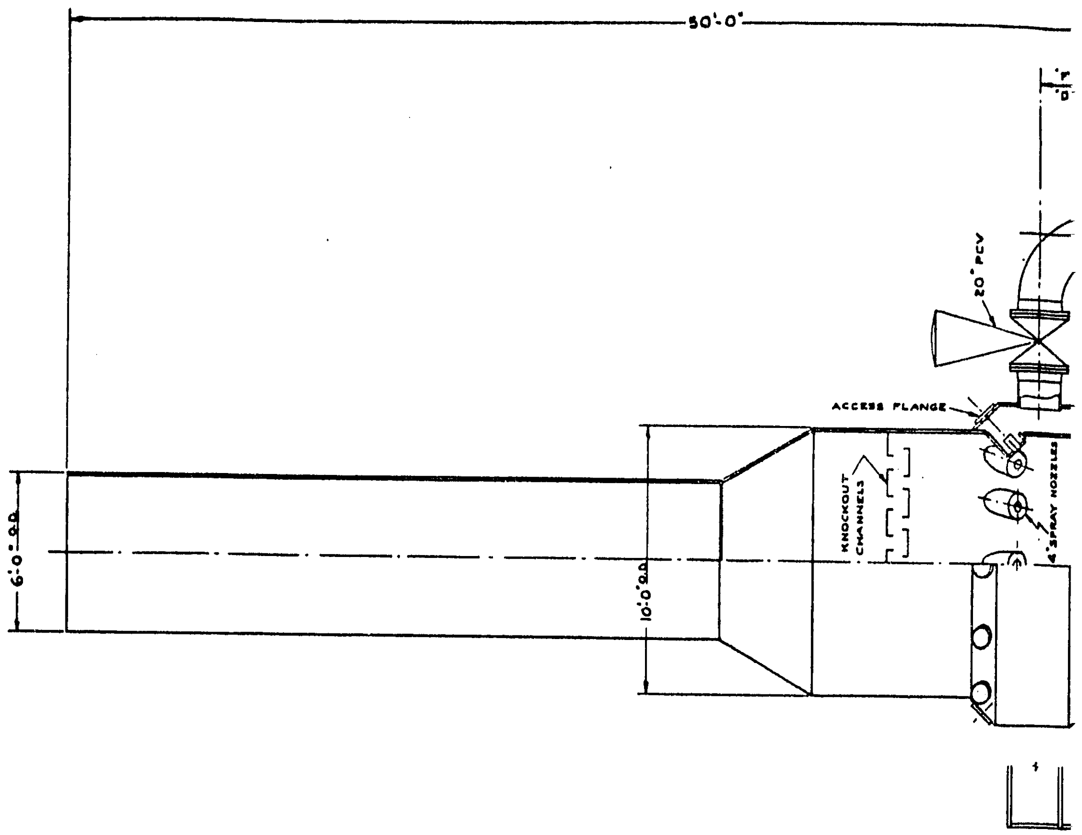

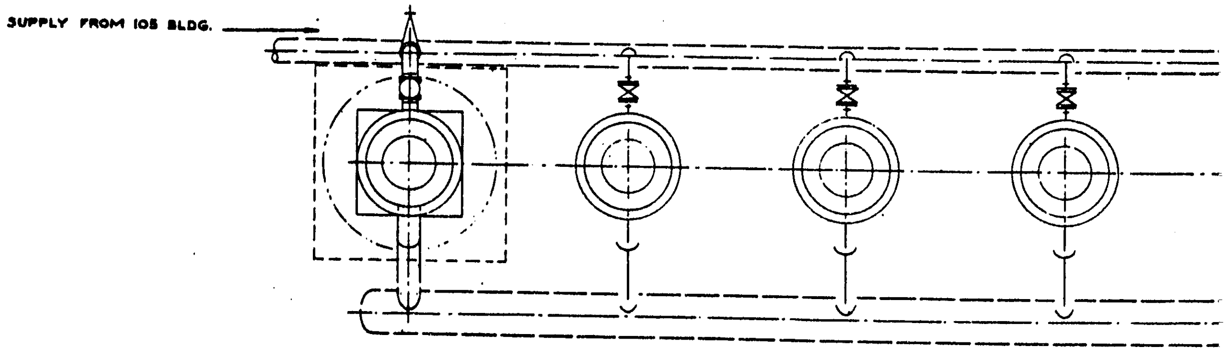

HALF PLAN
(TOTAL OF 10 REQUIRED PER AREA)
SCALE: $\frac{1}{8}$" = 1FT.

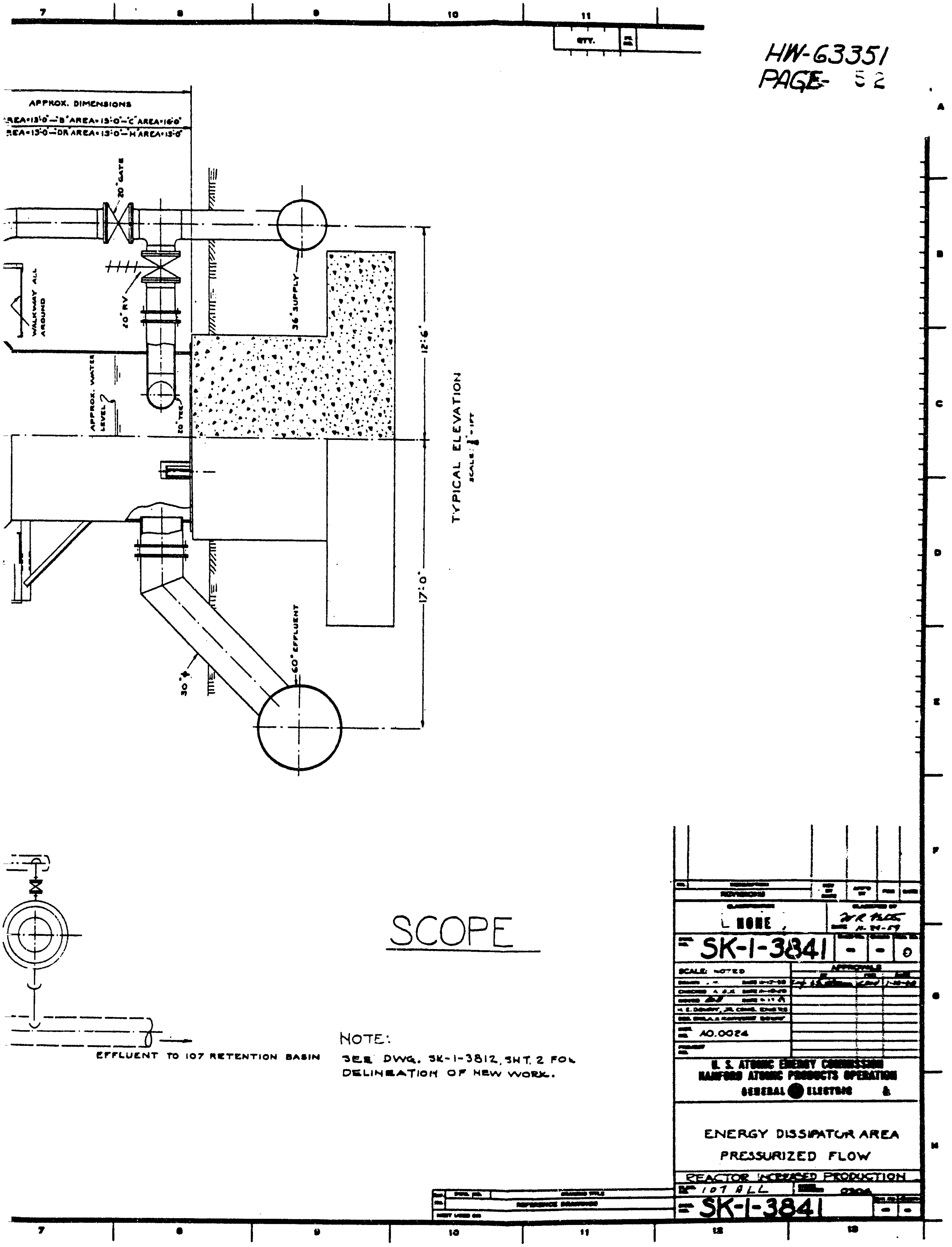

SCOPE

NOTE:
SEE DWG. SK-1-3812, SHT. 2 FOR DELINEATION OF NEW WORK.

NONE
W R Ploss
11-24-59
SK-1-3841 – – 0
SCALE: NOTED
APPROVALS
A0.0024

U. S. ATOMIC ENERGY COMMISSION
HANFORD ATOMIC PRODUCTS OPERATION
GENERAL ELECTRIC

ENERGY DISSIPATOR AREA
PRESSURIZED FLOW

REACTOR INCREASED PRODUCTION
107 ALL
0204
SK-1-3841 – –

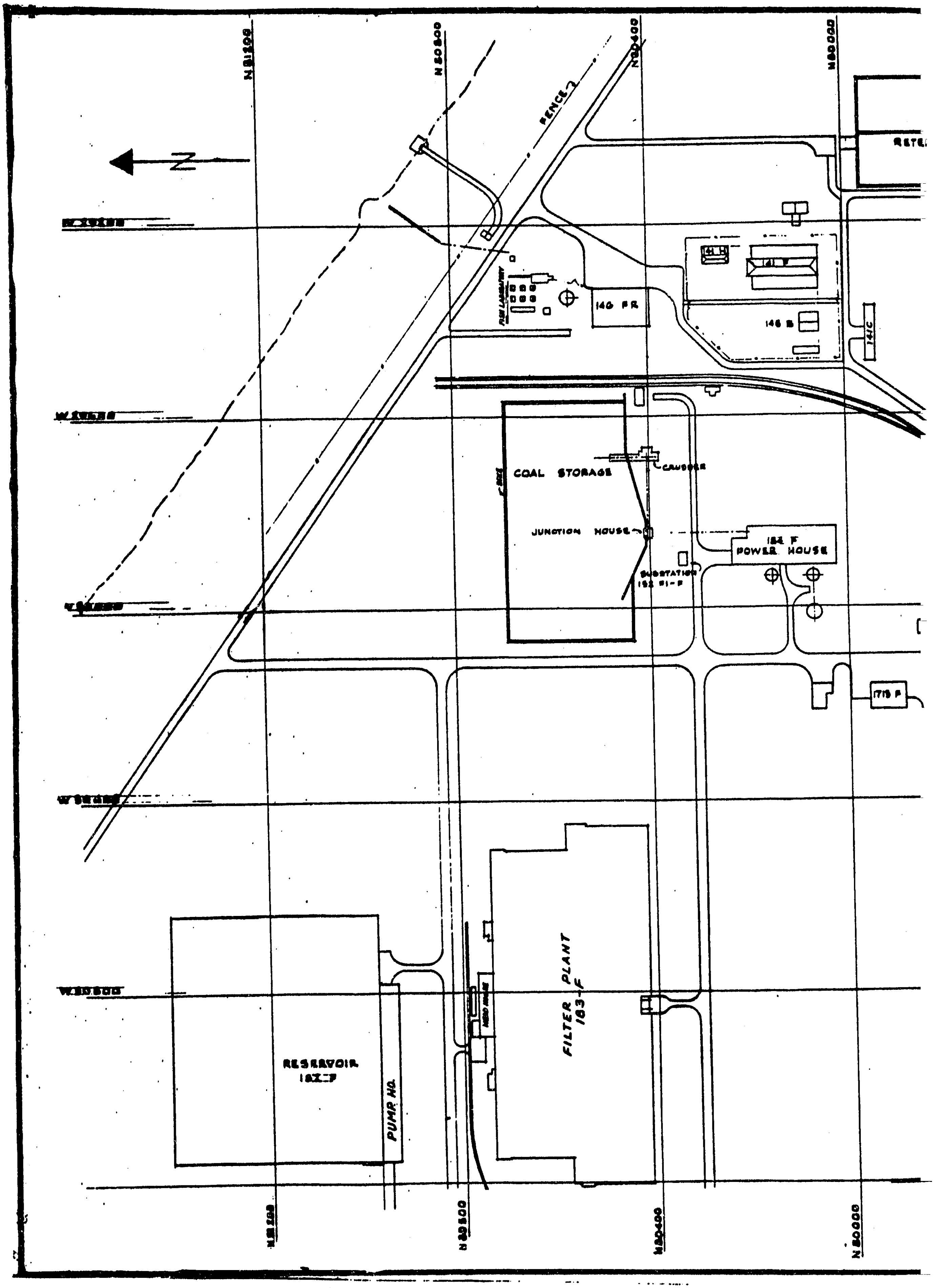
N 51200
N 50800
N 50400
N 50000
N
FENCE
RETE
141 F
141 H
146 B
141C
146 FR
FISH LABORATORY
COAL STORAGE
CRUSHER
JUNCTION HOUSE
184 F
POWER HOUSE
SUBSTATION
151 FI-F
1713 F
RESERVOIR
182-F
PUMP HO.
FILTER PLANT
183-F
N 50800
N 50400
N 50000

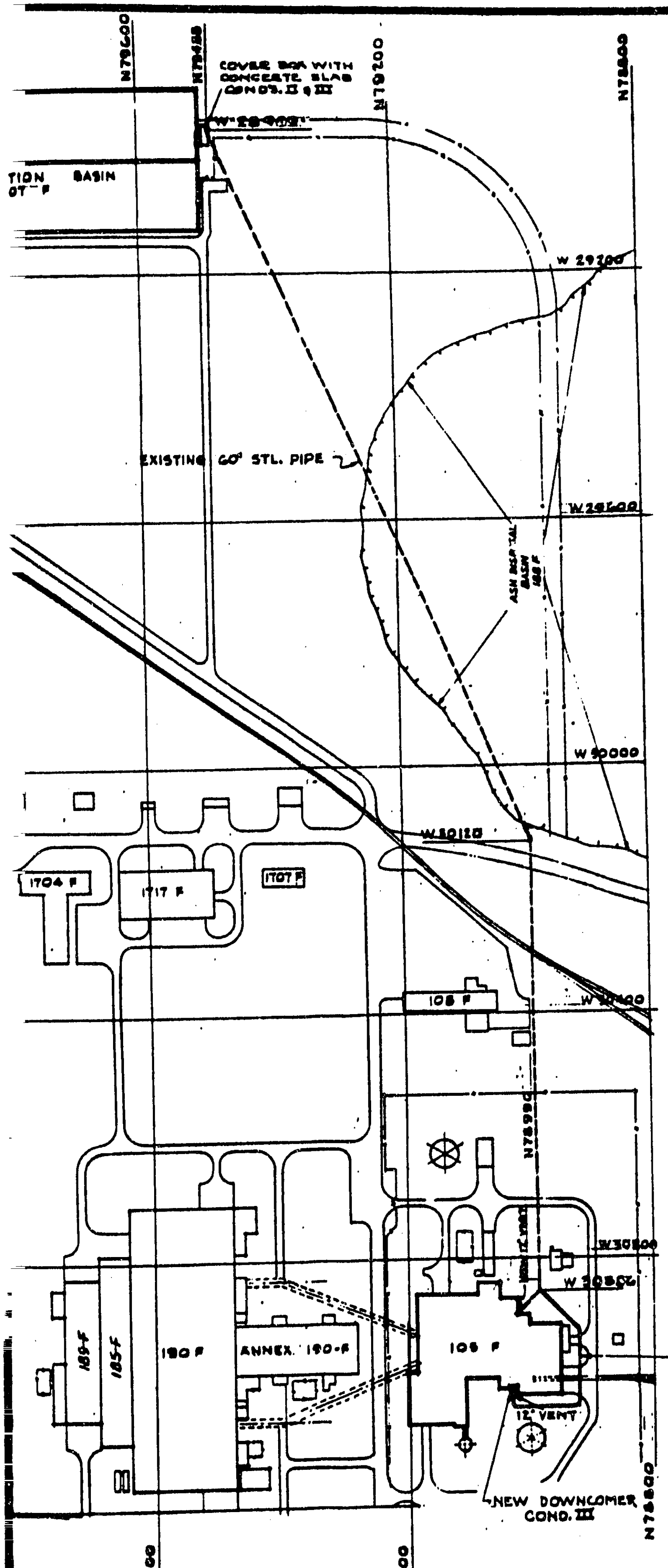

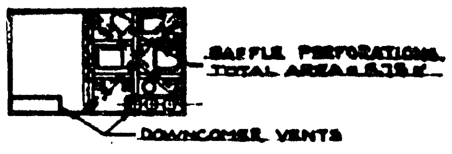

TYPICAL PERFORATED DOWNCOMER BAFFLE
-NO SCALE-

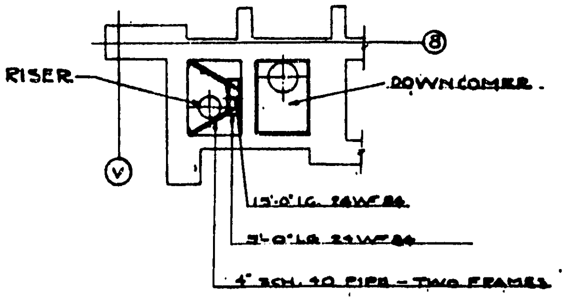

REINFORCEMENT OF DOWNCOMER WALL
-NO SCALE-

MODIFICATION	FLOW CONDITION*		
	COND. I	COND. II	COND. III
1. REINFORCE BOTTOM OF DOWNCOMER WALL	X	X	X
2. ADD DOWNCOMER ELBOW (DWG. NO. H-1-12068)	X	X	X
3. VENT EFFLUENT LINES ADJACENT TO DOWNCOMERS	X	X	X
4. ADD NEW DOWNCOMER			X
5. ADD NEW SECTION OF 60" EFFLUENT LINE			X
6. COVER DISCHARGE BOX AT 107-F BASIN		X	X

*SEE TABLE IX, DOC. NO. 63487 FOR DEFINITION OF CONDITIONS

RECOMMENDED MODIFICATIONS

1.	H-1-12068	SPECIAL 45° ELBOW AT DOWNCOMER
	DWG. NO.	DRAWING TITLE
REFERENCE DRAWINGS		

REVISIONS

CLASSIFICATION: NONE

CLASSIFIED BY: D K Ralls
DATE: 11-20-57

SK 1-3851 | 1 | 1 | 0

SCALE: 1" = 100'
DRAWN: DLH DATE 11-20-57
CHECKED: DEV DATE 1-20-58
APPROVED: DCP DATE 1-14-58

APPROVALS: 1-20-58

PROJ. NO.: AO-0024
PRIORITY NO.: DO-1121

U. S. ATOMIC ENERGY COMMISSION
HANFORD ATOMIC PRODUCTS OPERATION
GENERAL ELECTRIC

EFFLUENT LINE & DOWNCOMER MOD.
105-F TO 107-F
NON-PRESSURIZED FLOW
REACTOR INCREASED PRODUCTION

BLDG. 100 F AREA
0110; 8408

SK 1-3851

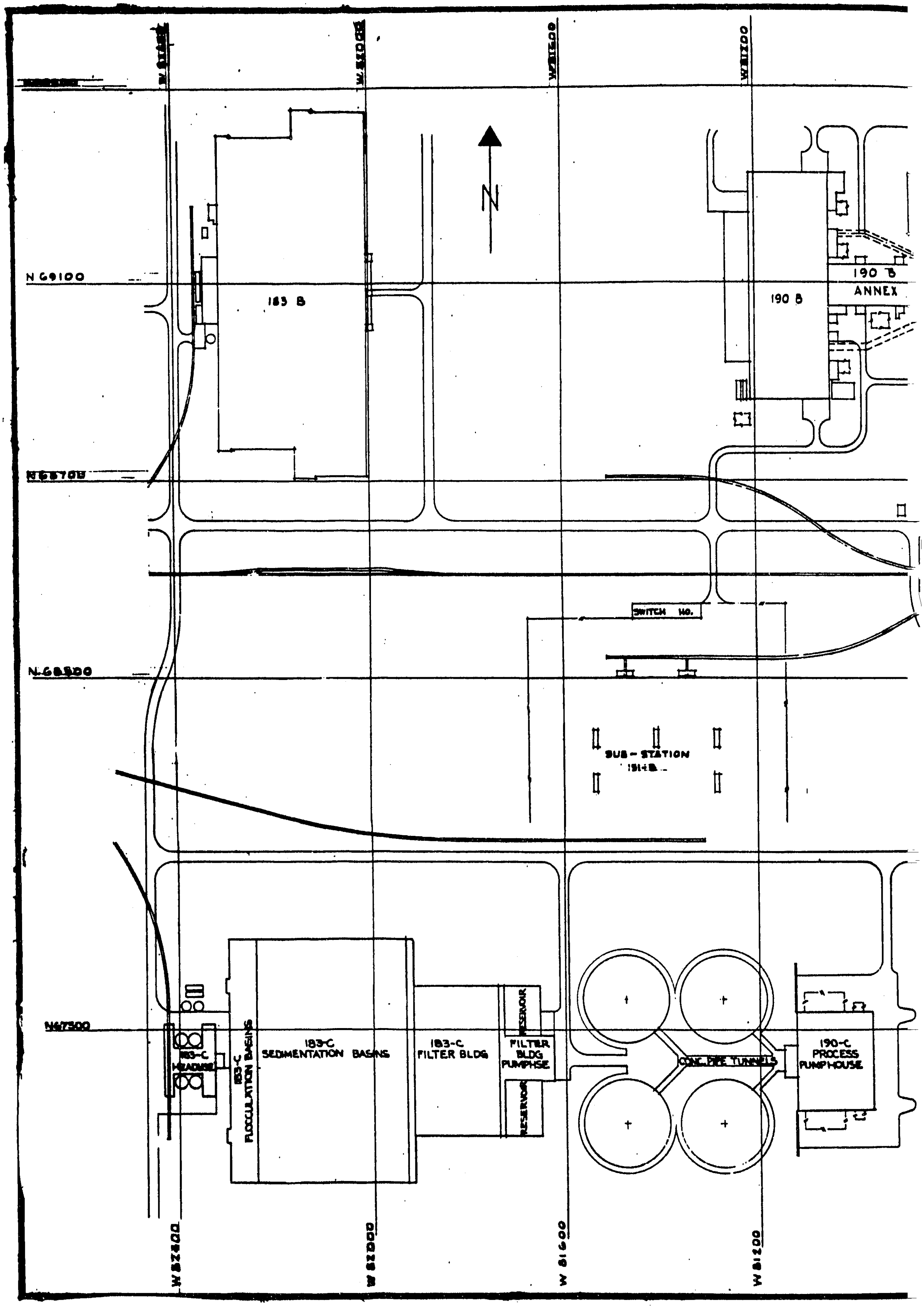
W 82000
W 81600
W 81200
N
N 69100
183 B
190 B
190 B
ANNEX
N 68700
SWITCH HO.
N 68300
SUB - STATION
151-B
N67500
183-C
HEADHSE
183-C
FLOCCULATION BASINS
183-C
SEDIMENTATION BASINS
183-C
FILTER BLDG
RESERVOIR
FILTER
BLDG
PUMPHSE
RESERVOIR
CONC. PIPE TUNNELS
190-C
PROCESS
PUMPHOUSE
W 82400
W 82000
W 81600
W 81200

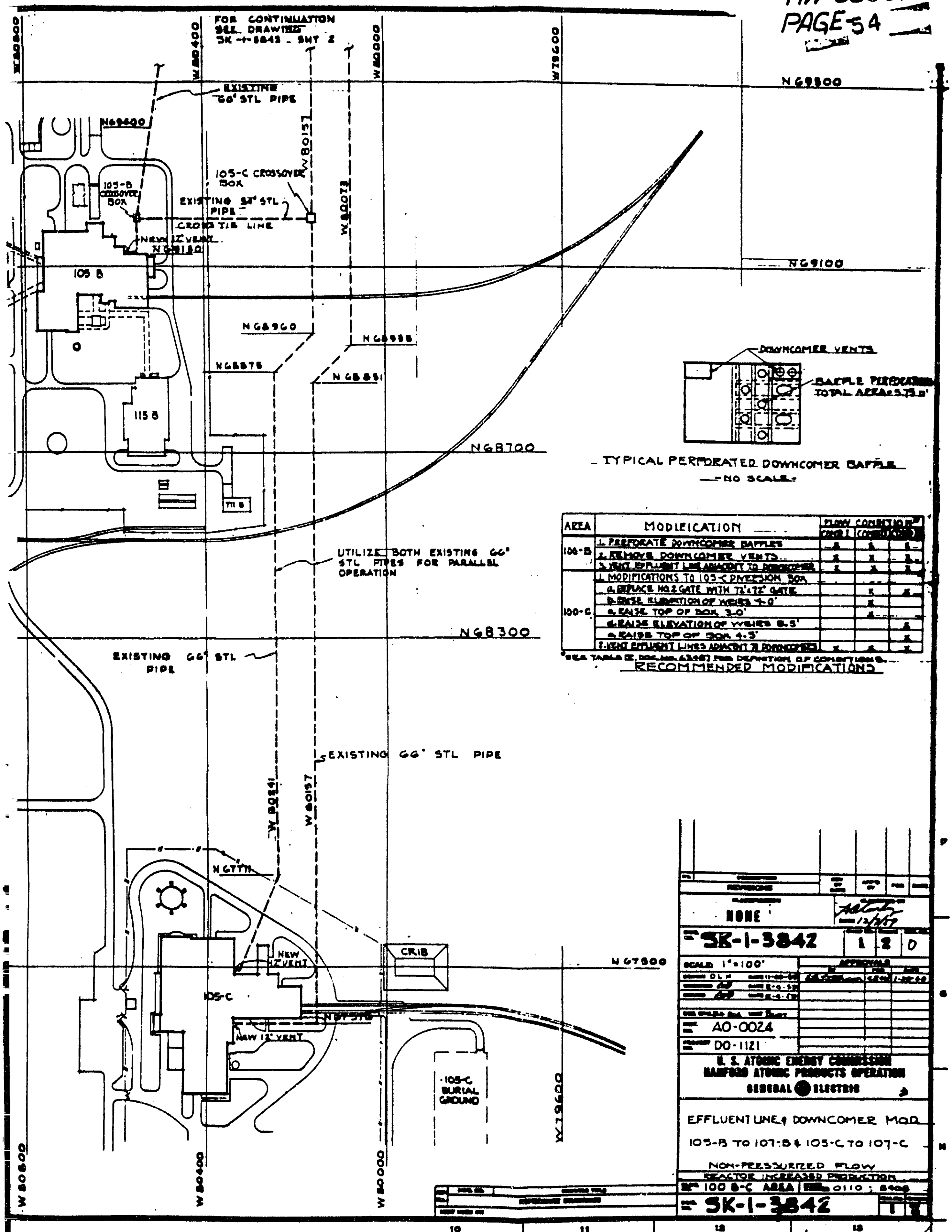

AREA	MODIFICATION	FLOW CONDITIONS*		
		COND 1	[illegible]	[illegible]
100-B	1. PERFORATE DOWNCOMER BAFFLES	x	x	x
	2. REMOVE DOWNCOMER VENTS	x	x	x
	3. VENT EFFLUENT LINE ADJACENT TO DOWNCOMER	x	x	x
100-C	1. MODIFICATIONS TO 105-C DIVERSION BOX			
	a. REPLACE NO 2 GATE WITH 72"x72" GATE		x	x
	b. RAISE ELEVATION OF WEIRS 4.0'		x	
	c. RAISE TOP OF BOX 3.0'		x	
	d. RAISE ELEVATION OF WEIRS 6.5'			x
	e. RAISE TOP OF BOX 4.5'			x
	2. VENT EFFLUENT LINES ADJACENT TO DOWNCOMERS	x	x	x

*SEE TABLE II, DOC. NO. 63987 FOR DEFINITION OF CONDITIONS.

RECOMMENDED MODIFICATIONS

NONE
12/2/59
SK-1-3842 1 2 0
SCALE 1" = 100'
DLH 11-30-59
APPROVALS
AO-0024
DO-1121
U. S. ATOMIC ENERGY COMMISSION
HANFORD ATOMIC PRODUCTS OPERATION
GENERAL ELECTRIC

EFFLUENT LINE & DOWNCOMER MOD
105-B TO 107-B & 105-C TO 107-C
NON-PRESSURIZED FLOW
REACTOR INCREASED PRODUCTION
100 B-C AREA 0110 ; 8400
SK-1-3842

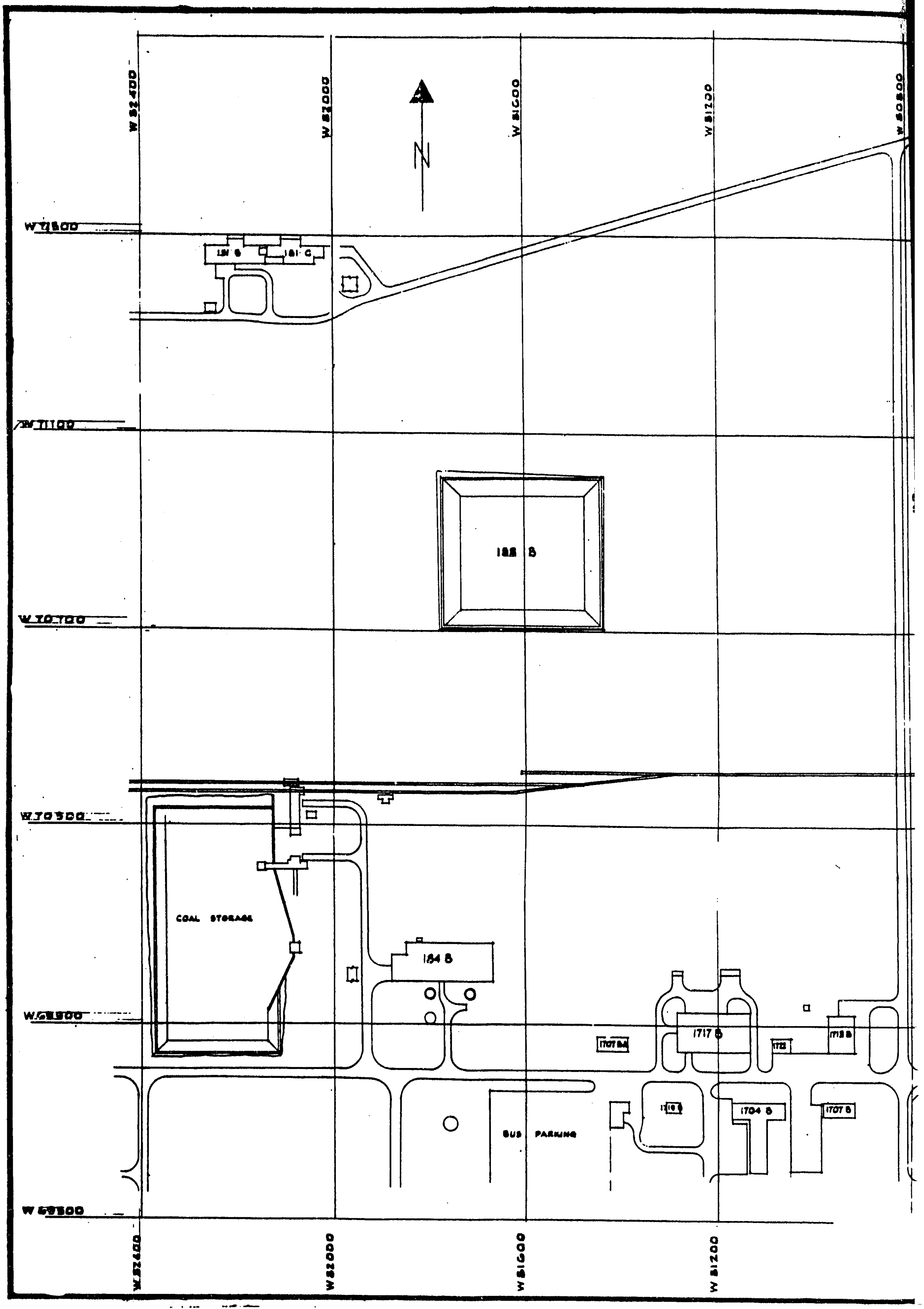
W 82400
W 82000
W 81600
W 81200
W 80800
N
W 71500
W 71100
W 70700
W 70300
W 69900
W 69500
181 B
181 C
182 B
COAL STORAGE
184 B
1717 B
1707 BA
1713
1713 B
1716 B
1704 B
1707 B
BUS PARKING
W 82400
W 82000
W 81600
W 81200

HW-63351
PAGE- 55

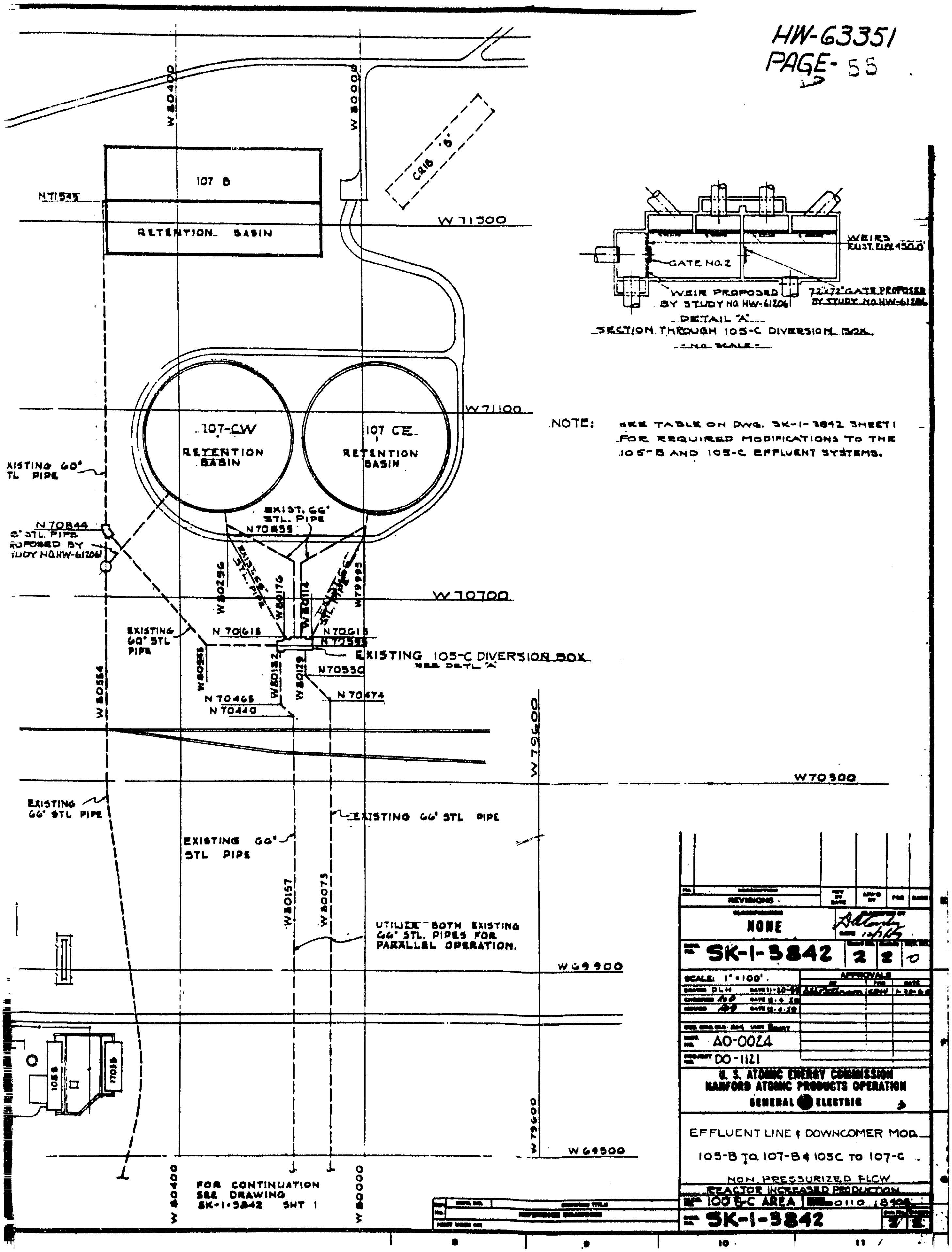

DETAIL "A"
SECTION THROUGH 105-C DIVERSION BOX
- NO SCALE -

NOTE: SEE TABLE ON DWG. SK-1-3842 SHEET 1 FOR REQUIRED MODIFICATIONS TO THE 105-B AND 105-C EFFLUENT SYSTEMS.

NONE
SK-1-3842 2 2 0
SCALE: 1" = 100'.
DRAWN DLH DATE 11-20-58
CHECKED AD DATE 12-4-58
APPROVED AD DATE 12-4-58
AO-0024
DO-1121
U. S. ATOMIC ENERGY COMMISSION
HANFORD ATOMIC PRODUCTS OPERATION
GENERAL ELECTRIC
EFFLUENT LINE & DOWNCOMER MOD.
105-B TO 107-B & 105C TO 107-C
NON PRESSURIZED FLOW
REACTOR INCREASED PRODUCTION
100 B-C AREA 0110 8498
SK-1-3842 2/2

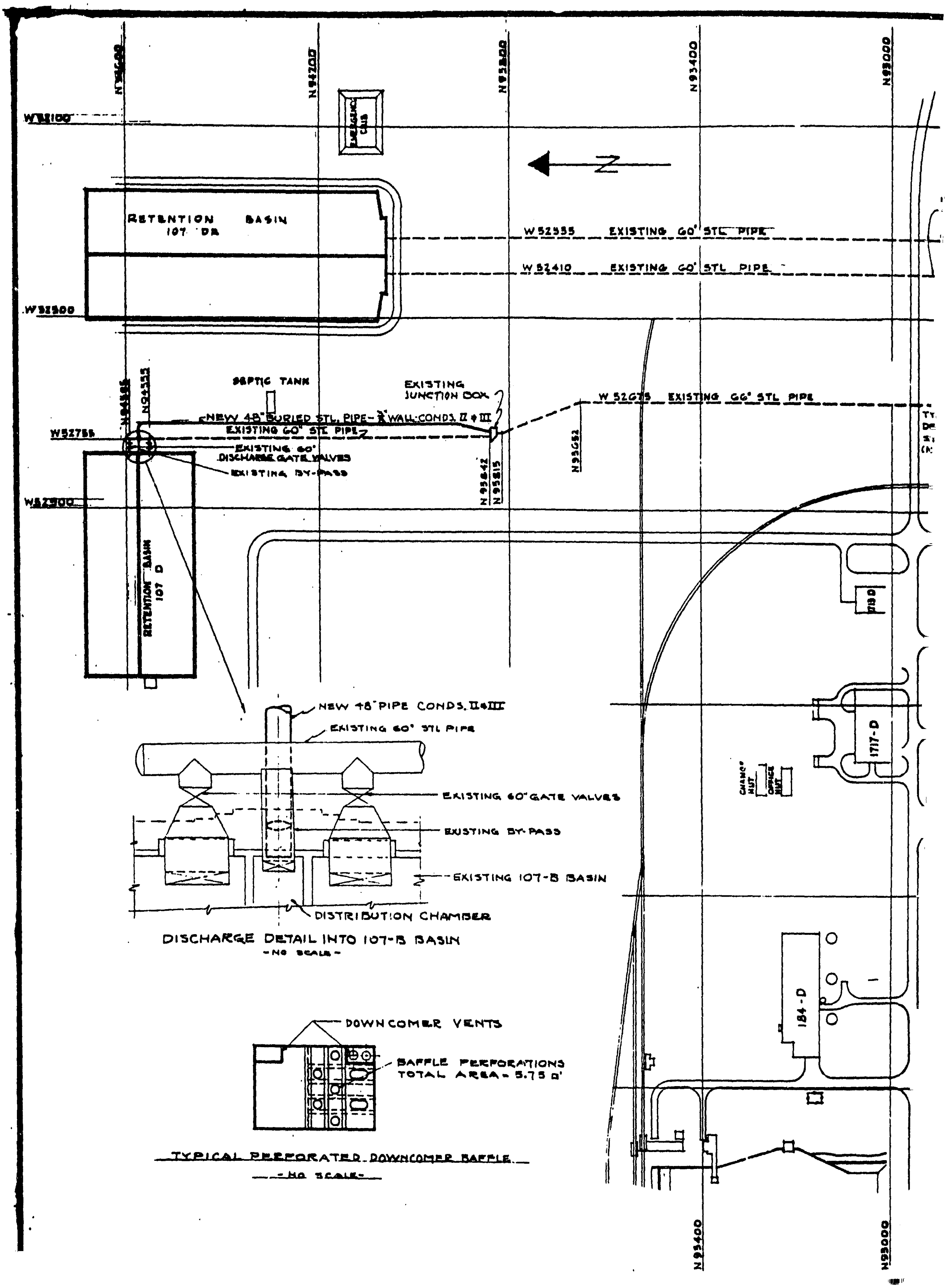
N94600
N94200
N93800
N93400
N93000
W52100
W52500
W52755
W52900
EMERGENCY CLUB
N
RETENTION BASIN
107 DR
W 52555 EXISTING 60' STL PIPE
W 52410 EXISTING 60' STL PIPE
SEPTIC TANK
N94585
N94555
EXISTING JUNCTION BOX
NEW 48" BURIED STL. PIPE - 3/8" WALL-CONDS. II & III
EXISTING 60" STL PIPE
EXISTING 60" DISCHARGE GATE VALVES
EXISTING BY-PASS
N 95842
N 95815
N95652
W 52675 EXISTING 66' STL PIPE
RETENTION BASIN 107 D
1719 D
1717-D
CHANGE HUT
OFFICE HUT
184-D
NEW 48" PIPE CONDS. II & III
EXISTING 60" STL PIPE
EXISTING 60" GATE VALVES
EXISTING BY-PASS
EXISTING 107-B BASIN
DISTRIBUTION CHAMBER
DISCHARGE DETAIL INTO 107-B BASIN
- NO SCALE -
DOWNCOMER VENTS
BAFFLE PERFORATIONS
TOTAL AREA = 5.75 □'
TYPICAL PERFORATED DOWNCOMER BAFFLE
- NO SCALE -
N93400
N93000

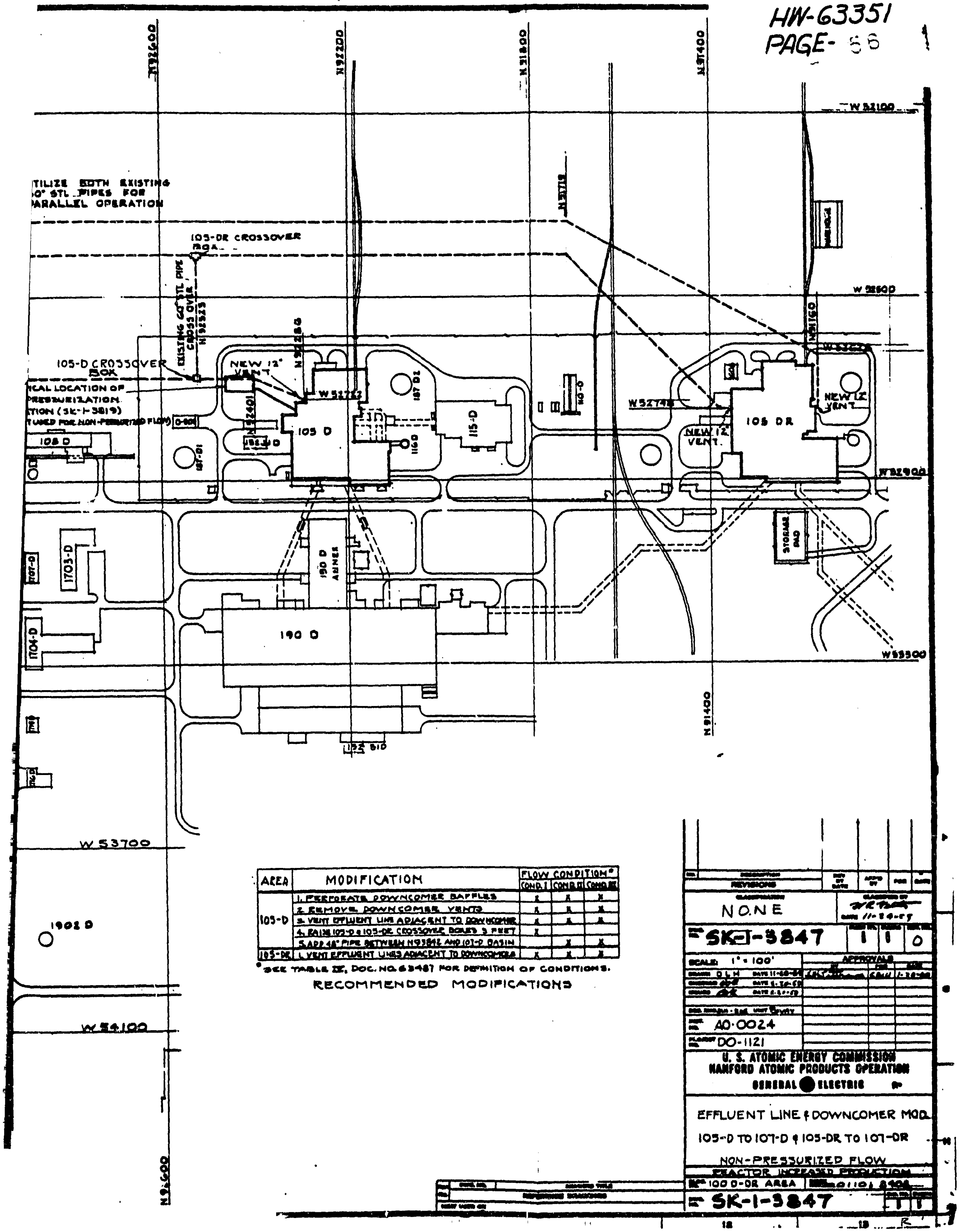

AREA	MODIFICATION	FLOW CONDITION*		
		COND. I	COND. II	COND. III
105-D	1. PERFORATE DOWNCOMER BAFFLES	X	X	X
	2. REMOVE DOWNCOMER VENTS	X	X	X
	3. VENT EFFLUENT LINE ADJACENT TO DOWNCOMER	X	X	X
	4. RAISE 105-D & 105-DR CROSSOVER BOXES 3 FEET	X		
	5. ADD 48" PIPE BETWEEN N93842 AND 107-D BASIN		X	X
105-DR	1. VENT EFFLUENT LINES ADJACENT TO DOWNCOMERS	X	X	X

*SEE TABLE IX, DOC. NO. 63487 FOR DEFINITION OF CONDITIONS.

RECOMMENDED MODIFICATIONS

REVISIONS

CLASSIFICATION
NONE

CLASSIFIED BY
W R Tate
DATE 11-24-59

SK-1-3847 | 1 | 1 | 0

SCALE: 1" = 100'

DRAWN D L H DATE 11-20-59
DATE 1-20-60
DATE 1-20-60

APPROVALS
CGH 1-20-60

A0-0024
DO-1121

U. S. ATOMIC ENERGY COMMISSION
HANFORD ATOMIC PRODUCTS OPERATION
GENERAL ELECTRIC

EFFLUENT LINE & DOWNCOMER MOD.
105-D TO 107-D & 105-DR TO 107-DR
NON-PRESSURIZED FLOW
REACTOR INCREASED PRODUCTION
100 D-DR AREA
01101 8404

SK-1-3847

18
19
R

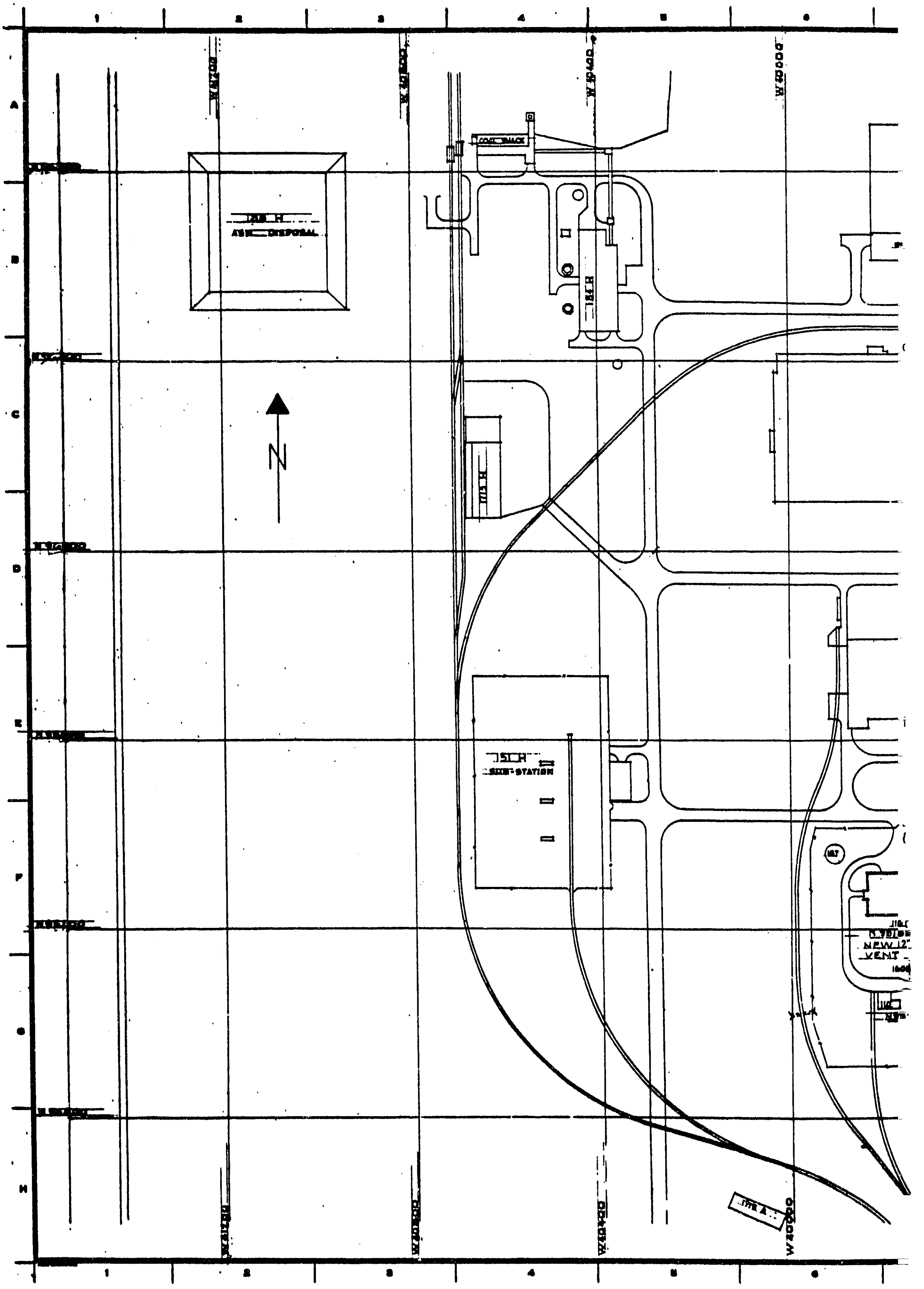
1
2
3
4
5
6
A
B
C
D
E
F
G
H
W 40400
W 40000
W 40800
COAL SHACK
155 H
ASH DISPOSAL
156 H
1713 H
151 H
SUB-STATION
167
NEW 12"
VENT
1776 A
N

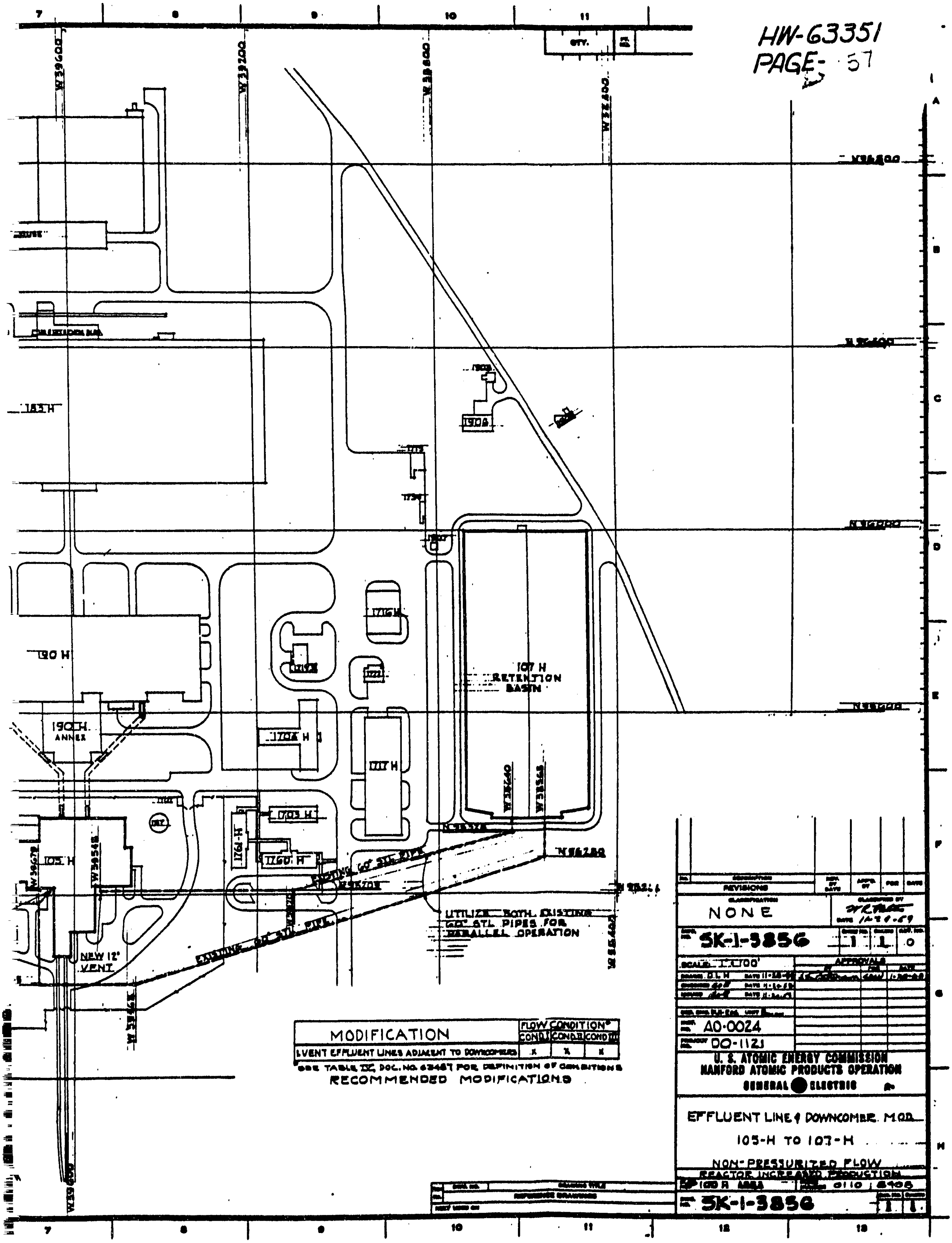

MODIFICATION	FLOW CONDITION*		
	COND I	COND II	COND III
VENT EFFLUENT LINES ADJACENT TO DOWNCOMERS	X	X	X

*SEE TABLE IX, DOC. NO. 63467 FOR DEFINITION OF CONDITIONS

RECOMMENDED MODIFICATIONS

REVISIONS

CLASSIFICATION
NONE

CLASSIFIED BY
DATE 12-29-59

SK-1-3856 1 L 0

SCALE 1"=100'
APPROVALS

DRAWN D.L.H. DATE 11-23-59

A0-0024

DO-1121

U. S. ATOMIC ENERGY COMMISSION
HANFORD ATOMIC PRODUCTS OPERATION
GENERAL ELECTRIC

EFFLUENT LINE & DOWNCOMER MOD.
105-H TO 107-H
NON-PRESSURIZED FLOW
REACTOR INCREASED PRODUCTION
100 H AREA 0110 6908

SK-1-3856 1 1

REFERENCE DRAWINGS

ITEM NO.	DESCRIPTION	NOMINAL SIZE	WALL THICK.	RATING OR SCHEDULE	MATERIAL	NON SHOCK WORKING PRESS PSI	HYDRO TEST PSI	GASKET	DWG. REF.	REMARKS
1	FLANGE	14"	–	600# W.N.	ASA B16.5 -1958	1440	2175	⅛" FLEXITALLIC (18-8 TYPE) STYLE CG	P-5371	
2	PIPE	14"	0.593	(P-28A) SCH. 60	ASTM A106(AISSG-C45)	674	1050	–	—"—	USE ASTM A 106 GR A, SCH 60 FOR 800°SERVICE
2A	PIPE	⅜"	0.126	(P-28A) SCH. 80	—"—	–	–	–	–	
2B	GLOBE VALVE	⅜"	–	600#	–	1440	2175	SCREWED	–	
2C	PIPE	1½"	0.200	(P-28A) SCH 80	ASTM A106(AISSG-C45)	1457	2175	–	P-5379	
2D	GLOBE VALVE	1½"	–	600#	ASA B16.5 - 1958	1440	2175	⅛" FLEXITALLIC TYPE CG	–	
2E	ORIFICE FLANGE	1½"	–	600#	—"—	—"—	—"—	–	–	
3	PIPE	18"	0.750	(P-28A) SCH. 60	ASTM A106(AISSG-C45)	680	1025	–	P-5371	USE ASTM A106 GR A, SCH 60 FOR 800°SERVICE
3A	DRAIN PIPE	1"	0.179	(P-28A, SCH. 80	—"—	1740	2600	–	–	
3B	GLOBE VALVE	1"	–	600#	–	1440	2175	SCREWED	–	
4	FLANGE	18"	–	600# W.N.	ASA B16.5 -1958	—"—	—"—	⅛" FLEXITALLIC STYLE CG)	P-5371	
4A	CHECK VALVE EPN 190-C 808	18"	–	600#	—	—"—	—"—	—"—	–	
5	VALVE(MOV) EPN 190-C -806	18"	–	—"—	—	—"—	—"—	—"—	–	
6	FLANGE, FLOW METER	18"	–	—"—	ASA B16.5 -1958	—"—	—"—	—"—	–	
6A	PIPE	½"	0.147	(P-28A) SCH. 80	ASTM A106(AISSG-C45)	2050	3075	—	–	
7	BRANCH CONNECTION	24 x 18	–	(P-28A) SCH. 60	—"—		–	–	P-5371	
8	PIPE	24"	0.768	—"—	—"—	680	1025	–	—"—	USE ASTM A106 GR A SCH 60, FOR 800° SERVICE
8A	PRV CONNECTION	3"							P-5379	
8B	PIPE	3"	0.300	(P-28A) SCH. 80	ASTM A106(AISSG-C45)	1200	1800		P-5371	
8B1	GATE VALVE	3"	–	600#	–	1440	2175		P-5379	
8B2	STRAINER (3" ST GF 1030)	3"	–	—"—	–	—"—	—"—	⅛" FLEXITALLIC (STYLE CG)	—"—	
8B3	VALVE (1¼" G 6S176)	1¼"	–	—"—		—"—	—"—		—"—	
8B4	PRV (EPN 190-C-807)	4"	–	—"—	–	—"—	—"—		—"—	
8C	DRAIN CONNECTION	1½"		–	–	–	–	—	P-5371	HALF COUPLING
8D	PIPE	1½"	0.200	(P-28A) SCH 80	ASTM A106(AISSG-C45)	1220	1830	–	—"—	
8E	VALVE(1½" G 6S176)	1½"	–	600#	–	1440	2175	–	—"—	
8F	DRAIN CONNECTION	18"		–	–	–	–	–	—"—	
8G	PIPE DRAIN	18"	0.750	(P-28A) SCH. 60	ASTM A106(AISSG-C45)	680	1025	–	—"—	USE ASTM A106 GR A, SCH 60 FOR 800°SERVICE
8H	W.N. FLANGE & BLIND FLANGE	18"	–	600#	ASA B16.5-1958	1440	2175	⅛" FLEXITALLIC (STYLE CG)	—"—	
8J	CONNECTION	2"	–	–	–	–	–		P-5377	
8K	VALVE (2"G GF 76)	2"	–	600#	ASA B16.5-1958	1440	2175	FLEXITALLIC	—"—	
8L	PIPE	2"	0.218	(P-28A) SCH. 80	ASTM A106(AISSG-C45)	1120	1675	–	—"—	
8M	CHECK VALVE (2"C GF78)	2"	–	600#	ASA B16.5 - 1958	1440	2175	⅛" FLEXITALLIC (STYLE CG)	—"—	
8N	VALVE (¾" G 6S176)	¾"	–	600 #	—"—				—"—	
8P	CONNECTION	8"	–	–		–	–	–	P-6042	
8R	PIPE STUB	8"	0.406	(P-28A) SCH. 60	ASTM A106(AISSG C45)	698	1050	—	—"—	USE ASTM A106 GR A SCH 60 FOR 895°SERVICE
8S	SLIP-ON FLANGE & BLIND FLANGE	8"	–	600#	ASA B16.5-1958	1440	2175	⅛" FLEXITALLIC (STYLE CG)	—"—	
8T	CONNECTION	1"	–	–	–	–	–	–	—"—	
8U	PIPE	1"	0.179	(P-28A) SCH. 80	ASTM A106(AISSG-C45)	1740	2600	–	—"—	
9	FLANGE	24"	–	600# W.N.	ASA B16.5-1958	1440	2175	⅛" FLEXITALLIC (STYLE CG)	P-5371	
10	VALVE	24"	–	600#	—"—	—"—	—"—	–	—"—	
11	STRAINER EPN 190-C-806	24"	–	600#	–	1440	2175	–	—"—	
11A	CONNECTION	4"	–	–	–	–	–	–	—"—	
11B	PIPE	4"	0.337	(P-28A) SCH. 80	ASTM A106(AISSG-C45)	1075	1600	–	—"—	
11C	VALVE (4" G GF 76)	4"	–	600#	ASA B16.5 -1958	1440	2175	⅛" FLEXITALLIC (STYLE CG)	—"—	
11D	VENT CONNECTION	1"	–	–	–	–	–	–	—"—	
11E	PIPE	1"	0.179	(P-28A) SCH. 80	ASTM A106(AISSG-C45)	1740	2600	–	—"—	

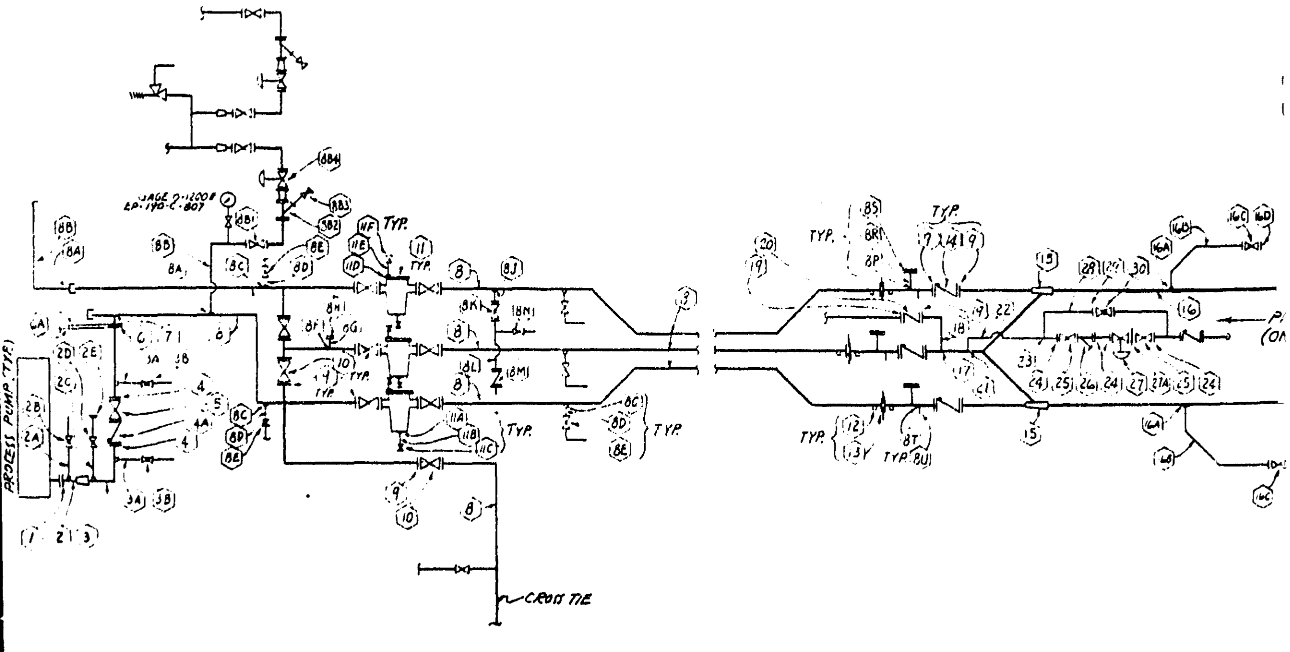

EM NO.	DESCRIPTION	NOMINAL SIZE	WALL THICK.	RATING OR SCHEDULE	MATERIAL	NON SHOCK WORKING PRESS.	HYDRO TEST	GASKET	DWG. REF.	REMARKS
F	VALVE	1"	-	600#	ASA B16.5 - 1958	1440 PSI	2175 PSI	-	P-5371	
2	COUPLING	¾"	-	2000#	ASTM A106 (A155G-C45)	2000	3000	—	P-6042	
3	FLANGE W/ORIFICE	24"	-	600# S.O.	ASA B16.5 - 1958	1440	2175	—	—"—	ORIFICE MAY REQUIRE RESIZING
4	CHECK VALVE (24C6F79)	24"	-	600#	—"—	—"—	—"—	⅛" FLEXITALLIC (STYLE CG)	—"—	
5	CONNECTION	24"	—	—	—	—	—	—	—"—	
6	PIPE	30"	1.00	P-37C	ASTM A155 GR. B	621	925	—	—"—	USE ASTM A106 GR B, 1" WALL FOR 900° SERVICE
A	CONNECTION	4 x 30	—	—	—	—	—	—	—"—	
B	PIPE	4"	0.337	(P-28A) SCH. 80	ASTM A106 (A155G-C45)	1075	1600	—	—"—	
C	VALVE (4G4F51)	4"	—	400#	ASA B16.5 - 1958	1440	2175	⅛" FLEXITALLIC (STYLE CG)	—"—	
D	BLIND FLANGE	4"	-	—"—	—"—	—"—	—"—	—"—	—"—	
7	CONNECTION	16 x 24	—	—	—	—	—	—	—"—	
8	PIPE	16"	0.656	(P-28A) SCH. 60	ASTM A106 (A155G-C45)	660	1000	—	—"—	USE ASTM A106 GR A SCH 80 FOR 1045 SERVICE
9	FLANGE	16"	-	600#	ASA B16.5 - 1958	1440	2175	⅛" FLEXITALLIC (STYLE CG)	—"—	
0	CHECK VALVE	16"	-	—"—	—"—	—"—	—"—	—"—	—"—	
1	CONNECTION	8 x 24	—	—	—	—	—	—	—"—	
2	PIPE	8"	0.406	(P-28A) SCH. 60	ASTM A106 (A155S-C45)	698	1050	-	—"—	USE ASTM A106 GR A, SCH 60 FOR 845" SERVICE

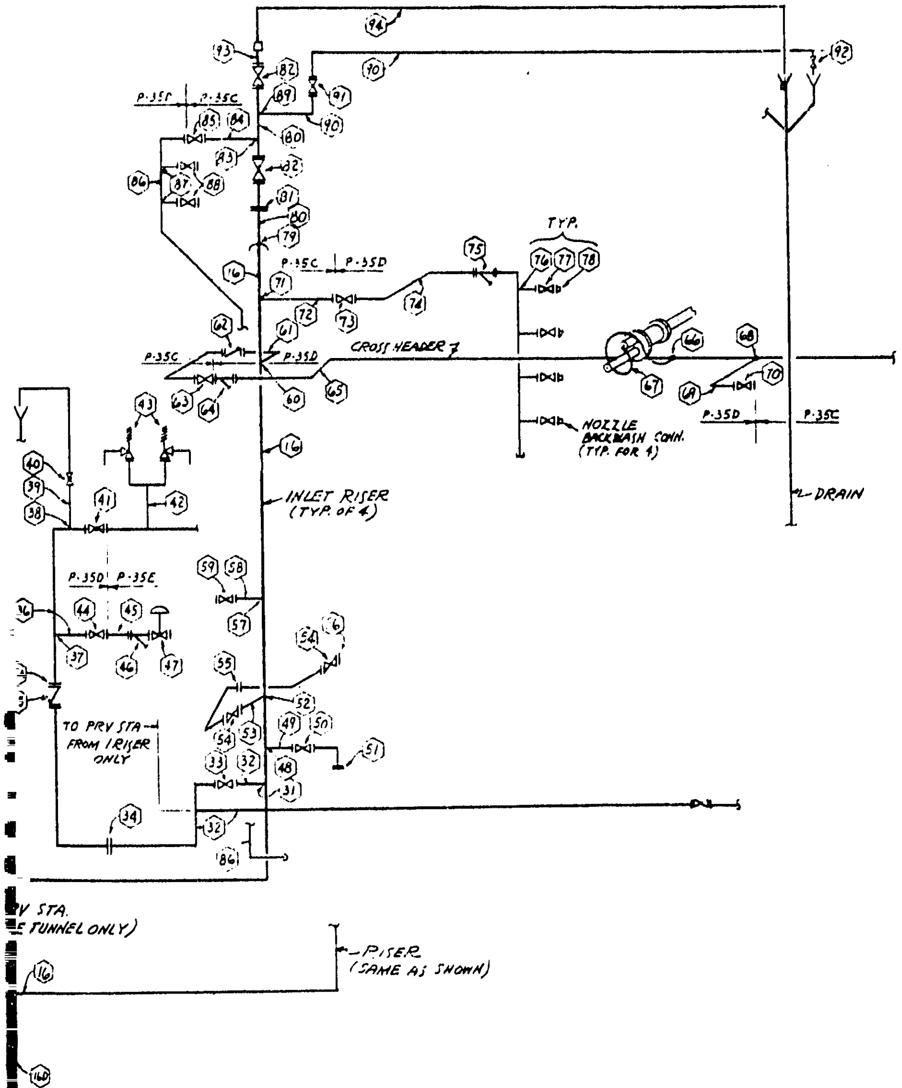

GENERAL NOTES

1. ALLOWABLE WORKING PRESSURE BASED ON POOREST ALLOWABLE MATERIAL A155 GRADE C45 WHICH WAS ALLOWED AS AN ALTERNATE MATERIAL IN HWS-5131.
2. UNLESS OTHEWISE NOTED ALL EXISTING BRANCH CONNECTIONS ARE MADE BY WELDING DIRECTLY TO THE RUN AND ARE NOT REINFORCED.
3. PIPING DIAGRAM ILLUSTRATES ONE PIPE TUNNEL AND ONE RISER ONLY. OPPOSITE PIPE TUNNEL AND THREE OTHER RISERS ARE SIMILAR EXCEPT AS NOTED.

NO.	DESCRIPTION	REV. BY DATE	APP'D BY	FOR	DATE
	REVISIONS				

CLASSIFICATION NONE
CLASSIFIED BY H.A. Surgent DATE 2/25/60
DWG. NO. SK-1-4087 SHEET NO. 1 SHEETS 2 REV. NO. —
SCALE: NONE
DRAWN SCHOENE DATE 1/22/60
CHECKED SCHOENE DATE 2/25/60
ISSUED H.A. Surgent 2/26/60
DES. ENG. J. SLUFA UNIT PEH
INST. NO. 1056W
PROJECT NO. DO-1208

APPROVALS BY	FOR	DATE
	C Ald	3-9-60

U. S. ATOMIC ENERGY COMMISSION
HANFORD ATOMIC PRODUCTS OPERATION
GENERAL ELECTRIC

PROCESS WATER PIPING
PRESSURE RATING
PROCESS PUMP TO INLET NOZZLE

REF. NO.	DWG NO.	DRAWING TITLE
	REFERENCE DRAWINGS	

NEXT USED ON

BLDG. NO. 105-C INDEX NUMBER 8401-01
DWG NO. SK-1-4087 SHT NO. 1 SHEETS 2

ITEM NO.	DESCRIPTION	NOMINAL SIZE	WALL THICK.	RATING OR SCHEDULE	MATERIAL	NON SHOCK WORKING PRESS.	HYDRO TEST	GASKET	DWG. REF.	REMARKS
23	CONNECTION	6"	—	—	—	—	—	—		
24	FLANGE	8"	—	600#	ASA B16.5-1958	1440	2175	⅛" FLEXITALLIC (STYLE CG)	P-6397	
25	GATE VALVE	8"	—	"	"	"	"	—	—	
26	STRAINER	8"	—	"	"	"	"	—	—	
27	PRV SPENCE TYPE C-20(GP) COMB. PILOTS TYPE D-P	8"	—	"	"	"	"	—	—	
27A	ORIFICE PL	1 3/16"	—	—	—	·	—	—	—	REPLACE FOR HIGHER ΔP.
28	PIPE	6"	0.500	(P-28A) SCH 80	ASTM A106 (A155G-C45)	990	1500	—	—	WILL REQUIRE RESIZING
29	FLANGE	6"	—	600#	ASA B16.5-1958	1440	2175	—	—	
30	GLOBE VALVE	6"	—	"	"	"	"	—	—	
31	CONNECTION	2½"	—	—	—	—	—	—	—	
32	PIPE	2½"	0.276	(P-28A) SCH. 80	ASTM A106 (A155G-C45)	1300	1950	—	P-8452	
33	VALVE (2½ G GF76)	2½"	—	600#	ASA B16.5-1958	1440	2175	⅛" FLEXITALLIC (STYLE CG)	"	
34	FLANGE	2½"	—	600# W.N.	"	"	"	"	"	
35	CHECK VALVE (2½ C3F852)	2½"	—	300#	"	720	1100	"	"	
35A	LAP JOINT FLANGE & STUB	2½"	—	"	—	"	"	—	P-6231	USE 400# VALVE FOR 96
36	PIPE	2½"	0.203	(P-35D) SCH. 40	AISI 304 OR 347	1200	1800	—	"	
37	CONNECTION WELD TEE	2½"	—	"	"	"	"	—	"	
38	" "	½"	—	"	"	"	"	—	"	
39	PIPE	½"	0.109	—	—	1700	2900	—	"	
40	GLOBE VALVE (½ GL 3F853)	½"	—	300#	ASA B16.5-1958	720	1100	—	"	
41	" (2½ GL 3F853)	2½"		"	"	"	"	—	"	USE 400# VALVE FOR 960#S
42	LAP JOINT FLANGE & STUB	2"	—	150#	"	275	425	—	"	
43	SAFETY RELIEF VALVES FISHER TYPE 196 OR EQUAL SET @ 125 PSI	2"	—	—	—	—	—	—	"	PROTECTED BY SRV (#43)
44	VALVE (2½G 3F851)	2½"	·	300#	ASA B16.5-1958	720	1100	⅛" FLEXITALLIC (STYLE CG)	"	USE 400# VALVE FOR 960#
45	PIPE	2½"	0.203	(P-35E) SCH. 40	AISI 304 OR 347	1200	1800		"	
46	STRAINER	2½"	—	150#	ASA B16.5-1958	275	425		"	USE 400# STR FOR 960#S
47	PRV 225 GPM CAP. INLET - 150 PSI OUTLET - 30 PSI FISHER #57 OR EQUAL	2½"	—	—	—	—	—	—	"	
48	CONNECTION	2½"								
49	PIPE	2½"	0.276	(P-28A) SCH. 80	ASTM A106 (A155G-C45)	1300	1950	—	P-8452	
50	VALVE (2½G GF76)	2½"	—	600#	ASA B16.5-1958	1440	2175	—	"	
51	FLANGED ELL & BLIND FLANGE	2½"	—	"	"	"	"	—	"	
52	CONNECTION	1½"	—						"	
53	PIPE	1½"	0.145	(P-35D) SCH. 40	AISI 304 OR 347	1235	1850	—	"	
54	GATE VALVE	1½"	—	600#	S.ST.	1440	2175	—	"	
55	FLANGE	1½"	—	600# S.O.	"	"	"	—	"	
56	BLIND FLANGE	1½"	—	600#	"	"	"	—	"	
57	CONNECTION	2"							"	
58	PIPE	2"	0.218	(P-35C) SCH. 80	ASTM A106 GR. B OR (A53)	1662	2500	—	"	
59	VALVE (2G GF81) & BLIND FLANGE	2"	—	600#	ASA B16.5-1958	1440	2175	—	"	
60	CONNECTION	5"							"	
61	PIPE	5"	0.375	(P-35C) SCH. 80	ASTM A106 GR. B OR (A53)	1475	2200	—	"	
62	CHECK VALVE (5C4F53)	5"	—	400#	ASA B16.5-1958	960	1450	—	"	
63	GATE VALVE (5G4F51)	5"	—	"	"	"	"	—	"	
64	STRAINER (SEE BPF 3678)	5"	—	"	"	"	"	—	"	
65	CROSS HEADER PIPE	4"	0.237	(P-35D) SCH. 40	AISI 304 OR 347	"	"	—	"	
66	CONNECTION								"	
67	INLET JUMPER (HW8038)								P-8479	DETAIL "X"
68	CONNECTION	1"				1075	1600	—	P-7503	
69	PIPE	1"	0.133	(P-35D) SCH. 40	AISI 304 OR 347	1580	2375	—	P-8451	
70	VALVE	1"	—	600#	S.ST.	1440	2175	—	"	
71	CONNECTION	2"							"	
72	PIPE	2"	0.218	(P-35C) SCH. 80	ASTM A106 GR. B OR (A53)	1662	2500	—	P-8452	
73	VALVE	2"	—	600#	S.ST.	1440	2175	—	"	
74	PIPE	2"	0.154	(P-35D) SCH 40	AISI 304 OR 347	896	1350	—	"	
75	STRAINER (Y TYPE)	2"	—	400#	S.ST.	960	1450	—	P-8475	
76	CONNECTION 1½" SHAPED NIPPLE	1½"	—	P-35-A					"	
77	GLOBE VALVE	1½"	—	600#	S.ST.	1440	2175	—	P-8478	DETAIL "E" (IMPROPER PIP CODE REF. FOR HW-5131)
78	SCR'D COMB. FLANGE	1½"	—	600#	—	"	"	—	P-8475	
79	CONNECTION	4"						—	—	
80	PIPE	4"	0.337	(P-35C) SCH. 80	ASTM A106 GR. B OR (A53)	1599	2400		P-8452	REINFORCED
81	FLANGE	4"	—	400# S.O.	ASA B16.5-1958	960	1450	—	"	
82	GATE VALVE (4G4F51)	4"	—	400#	"	"	"	—	"	
83	CONNECTION	1½"						—	"	
84	PIPE	1½"	0.200	(P-35C) SCH. 80	ASTM A106 GR. B OR (A53)	1821	2725	—	"	
85	VALVE (1½" G GF81)	1½"	—	600#	ASA B16.5-1958	1440	2175	—	"	
86	PIPE	1½"	0.145	(P-35D) SCH. 40	AISI 304 OR 347	995	1500	—	"	
87	CONNECTION (TO W.N. FLANGE)	½"							"	
88	GATE VALVE & BLIND FLANGE	½"	—	600#	S.ST.	1440	2175	—	"	
89	CONNECTION	¾"							"	
90	PIPE	¾"	0.154	(P-35C) SCH. 80	ASTM A106 GR. B OR (A53)	2597	3900	—	"	
91	VALVE (¾ G GF81)	¾"	—	600#	ASA B16.5-1958	1440	2175	—	"	
92	GLOBE VALVE	¾"	—	600# SCR'D	S.ST.	"	"	—	"	
93	PIPE	4"	0.237	(P-35C) SCH. 40	ASTM A106 GR. B OR (A53)	971	1450	—	"	
94	PIPE	3"	0.216	"	"	1094	1650	—	"	

QTY. | DESCRIPTION

NTROL

ERVICE

VICE

RVICE

RVICE

FOR GENERAL NOTES SEE SHEET 1

REVISIONS

CLASSIFICATION
NONE

SK-1-4087 2 2 —

SCALE: NONE

10561

DO-1208

U. S. ATOMIC ENERGY COMMISSION
HANFORD ATOMIC PRODUCTS OPERATION
GENERAL ELECTRIC

PROCESS WATER PIPING
PRESSURE RATING
PROCESS PUMP TO INLET NOZZLE

105-C
8401-01

SK-1-4087 2

REFERENCE DRAWINGS
SK-1-4087 SH.1

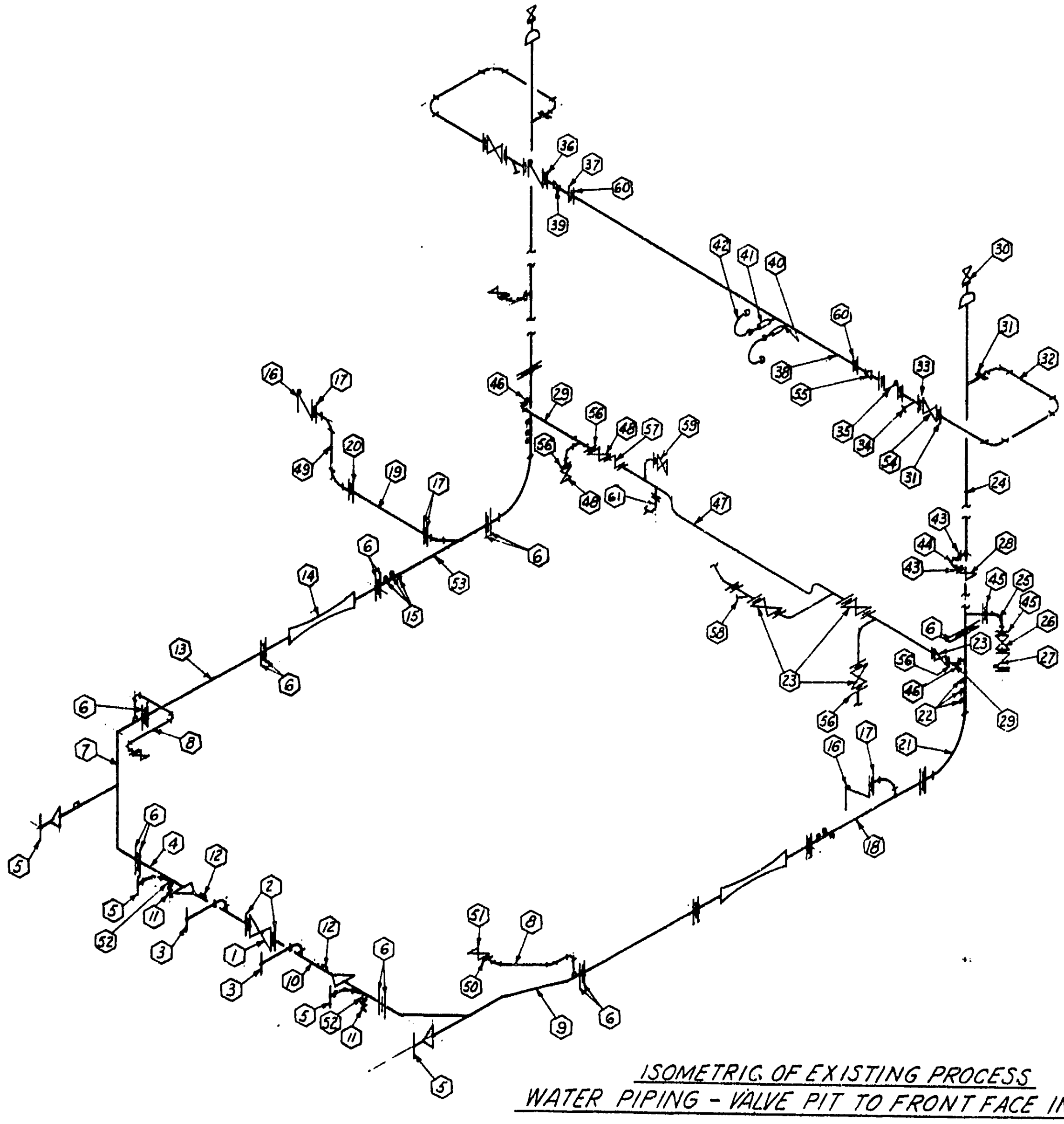

ISOMETRIC OF EXISTING PROCESS
WATER PIPING - VALVE PIT TO FRONT FACE INLET

ITEM NO	DESCRIPTION	NOMINAL SIZE	WALL THICKNESS	RATING OR SCHEDULE	MATERIAL (EXISTING)	NON-SHOCK WP PSI	HYDRO TEST PSI	GASKET	REMARKS
1	MOTOR OPER. GATE	24"		600#	ASTM-A216-GR-WCB	1200	1800		EXISTING BEFORE CG-558 REUSED
2	WELD NECK FLANGE	24"		600#	ASTM-A-105-46 GR.I	1200	1800	CLASS "B" RATING	
3	WELD NECK FLANGE	12"		600#	ASTM-A-105-46 GR.I	1200	1800	CLASS "B" RATING	
4	24"x 36" RED. SECTION - NEAR SIDE		1 1/4"		ASTM-A-155 CLASS 2 ASTM-A-285 GR.C	800	1200		
5	WELD NECK FLANGE	24"		600#	ASTM-A-105-46 GR.I	1200	1800	CLASS "B" RATING	
6	WELD NECK FLANGE	36"		400#	ASTM-A-105-46 GR.I	800	1200	CLASS "B" RATING	
7	24"x 36" "Y" SECTION - NEAR SIDE		1 1/4"		ASTM-A-155 CLASS 2 ASTM-A-285 GR.C	800	1200		
8	PIPE	2"		SCH. 40	C-STL.	800	1200		
9	24"x 36" "Y" SECTION - FAR SIDE		1 1/4"		ASTM-A-155 CLASS 2 ASTM-A-285 GR.C	800	1200		
10	24"x 36" RED. SECTION - FAR SIDE		1 1/4"		ASTM-A-155 CLASS 2 ASTM-A-285 GR.C	800	1200		
11	GATE VALVE	2"		600#	C-STL.	1200	1800		
12	THRED-O-LET	3/4"	EX. STRONG		C-STL. BONNY FORGE	800	1200		FOR INSTRUMENT CONN.
13	PIPE	36"	1 1/4		ASTM-A-155 CLASS 2 ASTM-A-285 GR.C	800	775		
14	PIPE	36"	1 1/4		ASTM-A-155 CLASS 2 ASTM-A-285 GR.C	800	775		
15	THRED-O-LET	1 1/2"	EX. STRONG		C-STL. BONNY FORGE	800	775		FOR INSTRUMENT CONN.
16	CHECK VALVE	16"		400#	CF 7-C	800	1200		EXISTING BEFORE CG-558 REUSED
17	WELD NECK FLANGE	16"		400#	ASTM-A-105-46 GR.I	800	775	CLASS "B" RATING	
18	PIPE	36"	1 1/4"		ASTM-A-155 CLASS 2 ASTM-A-285 GR.C	800	775		
19	PIPE	16"	0.656"	SCH. 60	ASTM-A-106 GR. A	800	1200		EXISTING BEFORE CG-558 REUSED
20	FLANGE	16"		400#	ASTM-A-105-46 GR.I	800	1200	CLASS "B" RATING	EXISTING BEFORE CG-558 REUSED
21	BASE ELL	36"	1 1/4"		ASTM-A-155 CLASS 2 ASTM-A-285 GR.C	800	1200		
22	INSTRUMENT CONN.	1/4" & 3/8"		TAPPED NPT					SHOULD BE WELDED
23	GATE VALVE	4"		300#	S/ST TYPE 304	600	900	CLASS "B" RATING	(4) REPLACE W/ 400# VALVE C-STL. EXISTING CROSSHEADER VALVE
24	VERTICAL RISER	36"	1 1/4"		ASTM-A-155 CLASS 2 ASTM-A-285 GR.C	800	1200		
25	PIPE	8"	0.406"	SCH. 60	ASTM-A-106 GR.A	860	1200		
26	GATE VALVE	8"		600#	ASTM-A-216 GR. WCB	1200	1800		EXISTING BEFORE CG-558
27	CHECK VALVE	8"		600#	ASTM-A-216 GR. WCB	1200	1800		
28	GATE VALVE	2"		600#	ASTM-A-216 GR. WCB	1200	1800		
29	PIPE	4"		SCH. 80	ASTM-A-106 GR. A	1280	1800		
30	GATE VALVE	2 1/2"		300#	C-STL.	600	900	CLASS "B" RATING	(4) VALVES REPLACE W/ 400# VALVE C-STL.
31	WELD NECK FLANGE	6"		400#	ASTM-A-105-46 GR. I	800	1200	CLASS "B" RATING	
32	PIPE	6"	0.432"	SCH. 80	ASTM-A-106 GR. A	1180	1770		
33	INSULATING FLANGE	6"		400#	ASTM-A-105-46 GR.I	800	1200	CLASS "B" RATING JM STYLE 71	
34	STRAINER	6"		400#	CF8-ASTM-A-351-52 T	800	1200		
35	CHECK VALVE	6"		400#	CF8-ASTM-A-351-52 T	800	1200	18-8 S/ST FLEXITALLIC	
36	WELD NECK FLANGE	6"		400#	ASTM-182 GR. F304	800	1200	CLASS "B" RATING	(46) REPLACE W/ REDUCER #39
37	WELD NECK FLANGE	4"		300#	ASTM-182 GR. F304	720	1100	CLASS "A" RATING	(46) FLANGES REPLACE W/ 400# S/ST FLANGE
38	PIPE CROSSHEADER	4"		SCH. 40	TYPE 304 OR 347	800	1200		USED EXISTING PIPE ON CG-558
39	ECCENTRIC REDUCER	6"x 4"		SCH. 40S	ASTM-A-312 GR. TP304	670	1000		(23) REPLACE W/ SCH. 80 S/ST
40	TUBE CONNECTOR	5/8"	0.113"	3/4" SCH. 40	18-8 TYPE 304	1170	1800		
41	VENTURI	←	REF. G.E.	DWG. H-1-	5342 →	1100	1600		
42	FLEXIBLE CONNECTOR	1"	0.125"		TEFLON & S/ST TY. 304 BRAID	1100	1600		
43	WELD NECK FLANGE	2"		600#	ASTM-A-105-46 GR. I	1200	1800	CLASS "B" RATING	
44	PIPE	2"		SCH. 80	ASTM-A-106 . GR. A	1330	2000		
45	WELD NECK FLANGE	8"		600#	ASTM-A-105-46 GR. I	1200	1800	CLASS "B" RATING	
46	WELD NECK FLANGE	4"		400#	ASTM-A-105-46 GR. I	800	1200	CLASS "B" RATING	
47	PIPE	4"		SCH. 40	ASTM-A-106-46 GR. I	776	1150		(AS REQ'D) REPLACE W/ MTL. A106 GR A
48	GATE VALVE	4"		300#	S/ST TYPE 304	600	900		(2) REPLACE W/ 400#
49	PIPE	16"	0.656	SCH. 60	ASTM-A-106-46 GR. I	800	1200		EXISTING BEFORE CG-558
50	FLANGE	2"		300#	ASTM-A-105-46 GR. I	600	900		(4) REPLACE W/ 400#
51	GATE VALVE	2"		300#	C-STL.	600	900		(2) REPLACE W/ 400#
52	WELD-O-LET	2"x 24"	EX. STRONG	EX. STRONG	C-STL.	800	1200		
53	PIPE	36"	1 1/4"		ASTM-A-155 CLASS 2 ASTM-A-285 GR.C	800	775		
54	GATE VALVE	6"		400#	C-STL.	800	1200		
55	ECCENTRIC REDUCER	6"x 4"		SCH. 40	S/ST TYPE 304	670	1000		(23) REPLACE W/ SCH. 80 S/ST
56	WELD NECK FLANGE	4"		300#	C-STL.	600	900	CLASS "B" RATING	(12) INSULATING FLANGE-REPLACE W/ 400# C-STL.
57	CHECK VALVE	4"		300#	S/ST TYPE 304	600	900	CLASS "B" RATING	(2) REPLACE W/ 400# C-STL.
58	STRAINER	4"		300#	S/ST TYPE 304	600	900	CLASS "B" RATING	(1) REPLACE W/ 400# C-STL.
59	GATE VALVE	2"		600#	C-STL.	1200	1800	CLASS "B" RATING	
60	LAP JOINT FLANGE	4"		300#	S/ST TYPE 304	600	900	CLASS "B" RATING	(46) REPLACE W/ 400# S/ST TYPE 304
61	PIPE	2 1/2"		SCH 40	ASTM-A-106-46-GR. I	1000	1500		

GENERAL NOTES

1. ALL INSTRUMENT TUBING TO BE CHECKED FOR OPERATING PRESSURE OF 800 PSI
2. AFTER PIPING MODIFICATIONS HYDROSTATIC TEST ALL PIPING AT 1200 PSI FOR 800 PSI SERVICE

105-DR

DWG. NO	DRAWING TITLE
H-1-9982 DR	PROCESS PIPING CROSSHEADER MOD.
H-1-9977 DR	VALVE PIT TO RISER
H-1-9974 DR	PROCESS PIPING VALVE PIT

REFERENCE DRAWINGS
NEXT USED ON

NO	DESCRIPTION	REV BY DATE	APP'D BY	FOR	DATE

REVISIONS

CLASSIFICATION
NONE
CLASSIFIED BY
DATE 2/29/60

DWG. NO. SK-1-4088
SHEET NO. —
SHEETS —
REV. NO. —

SCALE: NONE
DRAWN RAW DATE 2-24-60
CHECKED DATE
ISSUED

APPROVALS
BY	FOR	DATE
	CE+U	3-9-60

DES. ENG. MONOTUNT. PEM
INST. NO. 10561
PROJECT NO. D.O. 1208

U. S. ATOMIC ENERGY COMMISSION
HANFORD ATOMIC PRODUCTS OPERATION
GENERAL ELECTRIC

PROCESS WATER PIPING PRESSURE RATING VALVE PIT TO INLET NOZZLE

REACTOR INCREASE PRODUCTION

BLDG NO 105 DR
INDEX NUMBER 8401-01
DWG NO SK-1-4088

ITEM Nº	DESCRIPTION	NOMINAL SIZE	WALL THICKNESS	RATING OR SCHEDULE	MATERIAL	NON-SHOCK WP-PSI	HYDRO TEST-PSI	GASKET	REF. DWG	REMARKS	QUAN.
47	GA. VA. W/INSULATING FLG.	4"		300#	S. STL.	720	1100		P-4822	REPLACE WITH 400# C STL	5
48	C. VA. W/INSULATING FLG	4"		300#	S. STL	720	1100			REPLACE WITH 400# C STL	2
49	ORIFICE FLANGE	2½"		600#	ASTM A105 GR I	1440	2175				
50	PIPE	4"	.237	SCH 40	ASTM A106 GR A	776	1150			REPLACE MTL WITH A106GRB	AS REQ'D
51	ORIFICE PLATE									MAY REQ'R RESIZING	
52	STRAINER	4"		300#	S. STL	720	1100			REPLACE WITH 400# C STL	1
53	GLOBE VALVE	4"		300#	S. STL.	720	1100			REPLACE WITH 400# C STL	1
54	GATE VALVE	2½"		600#	ASTM A216 GR WCB	1440	2175				
55	PIPE	2"	.218	SCH 80	ASTM A106 GR A	1330	2000				
56	CHECK VALVE	2"		600#	ASTM A216 GR WCB	1440	2175				
57	PIPE	2"	.154	SCH 40	ASTM A 106 GR A	725	1075			REPLACE MTL WITH A106GRB	AS REQ'D
58	GATE VALVE	2"		300	C. STL.	720	1100			REPLACE WITH 400# C STL	6
59	PIPE	4"	.337	SCH 80	ASTM A106 GR A	1279	1920				
60	W.N. FLANGE	4"		400	ASTM A105 GR I	960	1450		P-4819		
61	NOZZLE	8	.406	SCH 60	ASTM A106 GR A	860	1300		"		
62	PIPE	8	.406	SCH 60	ASTM A106 GR A	860	1300		"		
63	GATE VALVE	8		400#	ASTM A 216 GR WCB	960	1450		"		
64	CHECK VALVE	8		400#	ASTM A 216 GR WCB	960	1450		"		

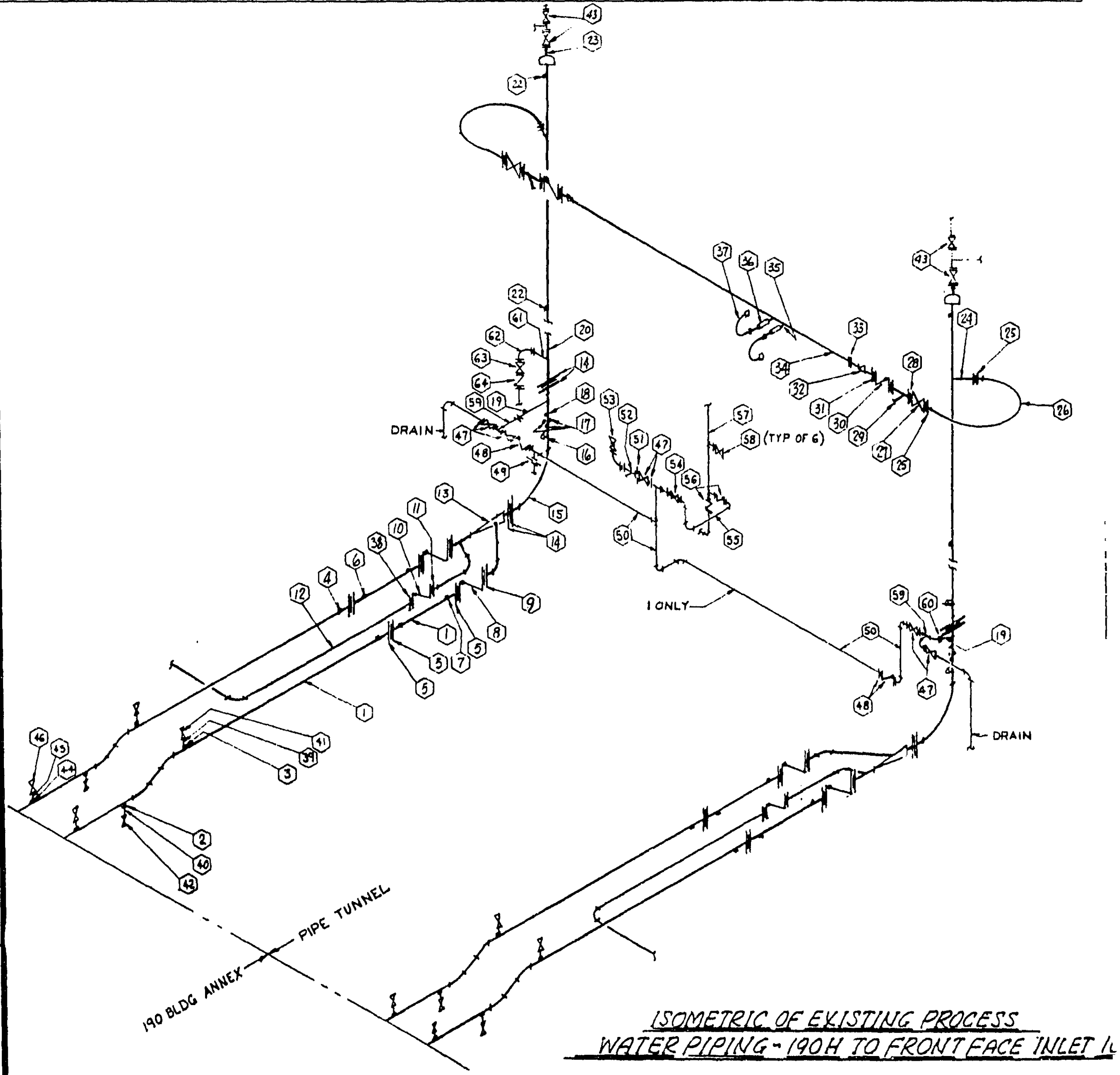

ISOMETRIC OF EXISTING PROCESS WATER PIPING - 190H TO FRONT FACE INLET I

ITEM NO	DESCRIPTION	NOMINAL SIZE	WALL THICKNESS	RATING OR SCHEDULE	MATERIAL	NON-SHOCK WP PSI	HYDRO. TEST PSI	GASKET	REF DWG	REMARKS	QUAN.
1	PIPE	24"	0.968"	SCH 60	ASTM A-106 GR A	803	1200		P-4817		
2	COUPLING	1½"		6000#	ASTM A-106 GRA	1200	1800		"		
3	COUPLING	1"		6000#	ASTM A-106 GRA	1200	1800		"		
4	COUPLING	¾"		6000#	ASTM A-106 GRA	1200	1800		"		
5	SLIP-ON FLANGE	24"		600#	ASTM A-105 GRI	1200	1800		"	W/ORIFICE PLATE	
6	NIPPLES	¾"	0.15"	SCH 160	ASTM A106 GRA	2000	3000			⅜ DRILL	
7	WELDOLET	1"		SCH 60	ASTM A-106 GRA	1200	1800				
8	CHECK VALVE	24"		600#		1200	1800		P-4822		
9	WELDNECK FLANGE	36"		600#	ASTM A-105 GRI	1200	1800				
10	CHECK VALVE	16"		400#		960	1450				
11	WELD-NECK FLANGE	16"		600#	ASTM A-105 GRI	1200	1800				
12	PIPE	16"		SCH 80	ASTM A-106 GRA	1310	1960				
13	"Y" SECTION	36"×24"	1½"		ASTM A-155 GRI GRA 285-C	800	1200				
14	WELD-NECK FLANGE	36"		400#	ASTM A105 GRI	960	1450				
15	BASE ELL	36"	1½"		ASTM A-155 GRI GRA 285C	800	1200				
16	NOZZLE	2"		400#	ASTM A-105-46-GRI	960	1450				
17	COUPLINGS	1½"		6000#	ASTM A-105 GR II	1200	1800				
18	COUPLING	1"		6000#	ASTM A-105 GR II	1200	1800				
19	NOZZLE	4"		400#	ASTM A-105 GR I	960	1450				
20	RISER	36"	1½"		ASTM A-155 GRI GRA 285C	800	1200				
21	COUPLING	1"		6000#	ASTM A-105 GR II	1200	1600				
22	NOZZLE	2"		400#	ASTM A-105 GR I	960	1450				
23	NOZZLE	4"		400#	ASTM A-105 GRI	960	1450				
24	NOZZLE	6"		400#	ASTM A-105 GRI	360	1450				
25	WELD-NECK FLANGE	6"		400#	ASTM A-105 GRI	960	1450				
26	PIPE	6"		SCH 80	ASTM A-106 GR A	1180	1800			HWS 7150	
27	GATE VALVE	6"		400#	ASTM A-216 GR WCB	960	1450				
28	INSULATING FLANGE..	6"		400#	ASTM A-106 GRA	800	1200	⅛" JM STYLE 71		CLASS B RATING	
29	STRAINER	6"		400#	CF8 ASTM A351-52T	960	1450				
30	CHECK VALVE	6"		400#	SST TYPE 304	960	1450	SST FLEXITALLIC			
31	LAP JOINT FLANGE	6"		300#	ASTM A182 F304	720	1100	CLASS A		REPLACE WITH 400# SST	46
32	ECCENTRIC REDUCER	6"×4"		SCH 40	SST TYPE 304	670	1000			REPLACE WITH SCH 80	46
33	LAP JOINT FLANGE	4"		300#	ASTM A182 GR F304	720	1100	CLASS A		REPLACE WITH 400# C STL	46
34	PIPE	4"		SCH 40	SST TYPE 304	960	1440				
35	TUBE CONNECTION	⅝"	0.113"	½" SCH 40	18-8 TYPE 304	1170	1800				
36	VENTURI	← REF. DWG. H-1-5342 →				1150	1600		H-1-5342		
37	FLEXIBLE CONNECTION	1"	0.125"		TEFLON & SST BRAID	1100	1600		—		
38	SLIP-ON FLANGE	16"		400#	ASTM A105 GRI	960	1450		P-4817		
39	NIPPLE	1"		SCH 80	ASTM A106 GRA	2090	3000		"		
40	NIPPLE	1½"		SCH 80	ASTM A106 GRA	1460	2200		"		
41	GATE VALVE	1"		600#	ASTM A105 GRI	1200	1800		"		
42	GATE VALVE	1½"		600#	ASTM A105 GRI	1200	1800		"		
43	GATE VALE	4"		300#	ASTM A216-GR WCB	720	1100		P-4822	REPLACE WITH 400# C-STL	4
44	WELDOLET	24 × 2		SCH 80		1330	2000		P-4825	SOLIDS FEED CONNECTION	
45	PIPE	2	.218	SCH 80	ASTM A106 GR A	1330	2000		"		
46	GATE VALVE	2		600#	ASTM A216 GR WCB	1440	2175		"		

GENERAL NOTES

1. ALL INSTRUMENT TUBING TO BE CHECKED FOR OPERATING PRESSURE OF 800 PSI.
2. AFTER PIPING MODIFICATIONS HYDROSTATIC TEST ALL PIPING AT 1200 PSI. FOR 800 PSI SERVICE

NO.	DWG. NO.	DRAWING TITLE
	REFERENCE DRAWINGS	
	NEXT USED ON	

NO.	DESCRIPTION	REV. BY DATE	APP'D BY	FOR	DATE
	REVISIONS				

CLASSIFICATION
NONE
CLASSIFIED BY J.A. Siegel
DATE 2/25/60

DWG. NO. SK-1-4089

SCALE: NONE
DRAWN DATE 2-23-60
CHECKED T. SLU DATE 2-29-60
ISSUED

APPROVALS

BY	FOR	DATE
	CRW	3-4-60

DES. ENG. MOEDT UNIT PWM
INST. NO. 10561
PROJECT NO. DO-1208

U. S. ATOMIC ENERGY COMMISSION
HANFORD ATOMIC PRODUCTS OPERATION
GENERAL ELECTRIC

PROCESS WATER PIPING
PRESSURE RATING
VALVE PIT TO INLET NOZZLE

REACTOR INCREASE PRODUCTION
BLDG. NO. 105H
INDEX NUMBER ...01-01

DWG. NO. SK-1-4089

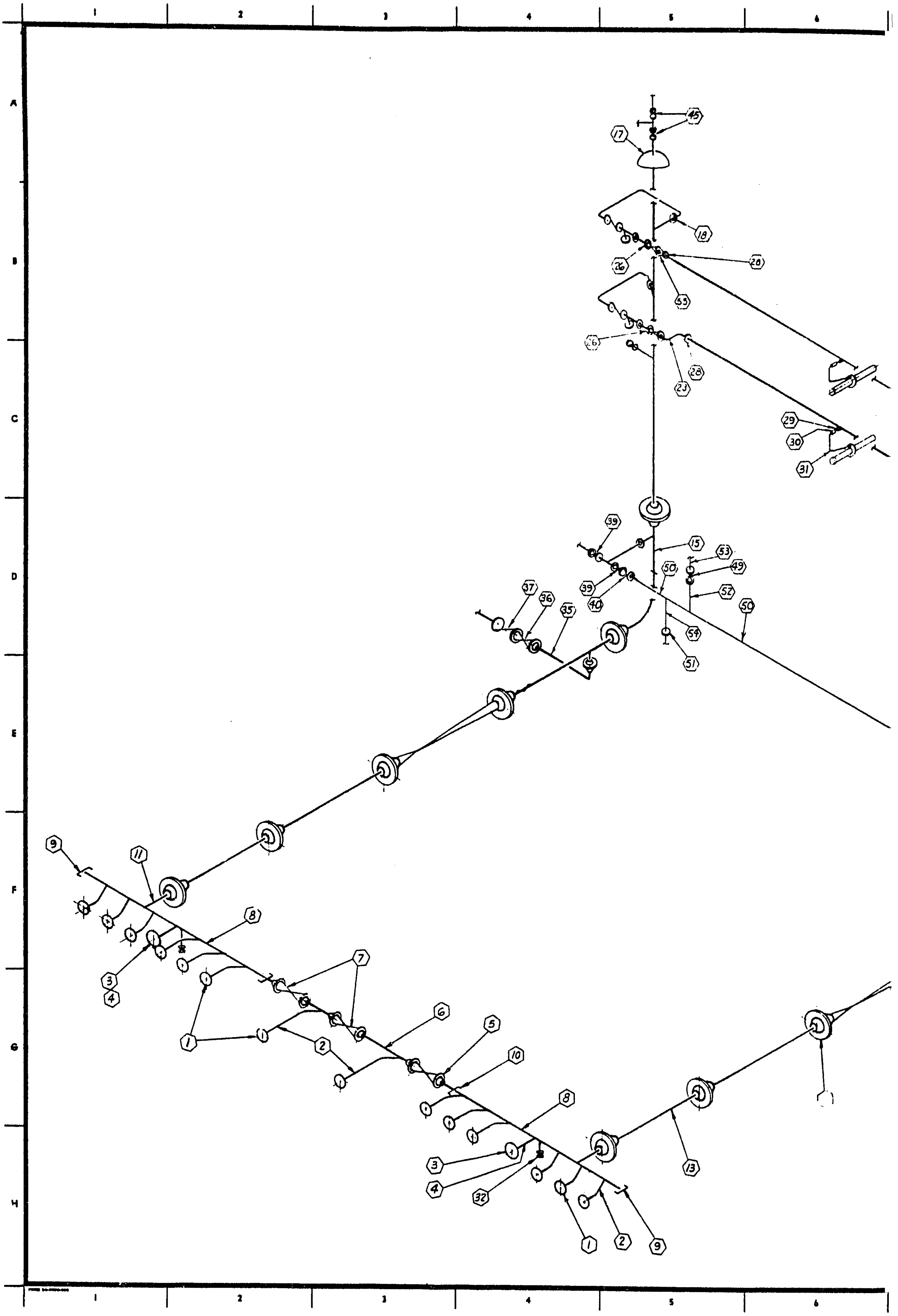
1
2
3
4
5
6
A
B
C
D
E
F
G
H
45
17
18
26
28
55
26
23
28
29
30
31
39
15
53
49
39
40
50
52
50
37
36
35
54
51
9
11
8
7
3
4
1
2
6
5
10
8
3
4
32
13
1
2
9

ITEM	DESCRIPTION	SIZE DIA.	SIZE WALL	RATING & CLASSIFICATION	NON-SHOCK WORKING PRESS.	MAX. TEST PRESS.	REMARKS
1	FLANGE	12"		600# ASTM A-105-46 GR-1	1200	1800"	
2	PIPE	12"	.562"	ASTM A-106-52T GR A	SCH.60 CLASS "A" 809"	1075"	
3	FLANGE	18"		400# ASTM A-105-46 GR-1	800"	1200	
4	PIPE	18"	.750"	SCH. 60 A-106 GR.A	809"	1200	
5	FLANGE	16"		600# ASTM A-105-46 GR-1	1200	1800	
6	PIPE	16"	.656"	SCH. 60 A-106 GR.A	900	1350	
7	VALVE	16"		400# ASTM 216 GR-WCB	800	1200	
8	PIPE	36"	1.250	A-155-52T CL.2 A-285 GR C PLATE	800	1200	
9	HEAD (ELLIPSOIDAL)	36"	1.250"	"	800	1200	
10	HEAD (ELLIPSOIDAL) W/16" OPEN	36"	1.250"	"	800	1200	
11	PIPE	36"	1.250"	"	800	1200	
12	FLANGE	36"		400# ASTM-105-46 GR.1	800	1200	
13	PIPE	36"	1.250"	ASTM-A-155-52T & A-285-53T FIRE BOX GR.C	800	1200	
14	VENTURI	36"		"	800	1200	
15	BASE ELBOW	36"	1.250	ASTM A-155-52T & A-285-53T FIREBOX GR.C	800	1200	MITER CONSTRUCTION
16	NOZZLE	4"		400# ASTM-A105-46 GR.I CL.B	800	1200	
17	RISER	36"	1.250"	ASTM-A-155-52T & A-285-53T FIREBOX GR.C	800	1200	
18	NOZZLE	5"		400# ASTM-A105-46 GR.I CL.B	800	1200	
19	FLANGE	5"		400# ASTM-A105-46 GR.I CL.B	800	1200	
20	PIPE	5"	.375"	SCH. 80 ASTM-A-106 52T GR.A	1180	1775	
21	CHECK VALVE	5"		400# ASTM A 216 GR WCB	800	1200	INSULATION FLANGE J.M. #71 GASKET
22	STRAINER (SPECIAL)	5"		400# CF8-ASTM-A351-52T CL.B	800	1200	
23	90° ELBOWS	4"		SCH 40 S-ST TYPE 304	800	1200	(30) REPLACE WITH 5" SCH 80 S-ST & REDUCE TO 400# WN FLANGE
24	REDUCER	4"×5"		SCH 40 S-ST TYPE 304	800	1200	(78) REPLACE WITH 5" SCH 80 S-ST TYPE 304 PIPE
25	VALVE, GATE	4"		300# SST	600	900	(78) REPLACE WITH 5" 400# S-ST
26	FLANGE	4"		300# SST	600	900	(78) REPLACE WITH 5" 400# S-ST
27	PIPE	4"		SCH. 40 SST	1250	1875	
28	FLANGE (VAN STONE)	4"		300# CL.B	600	900	(30) REPLACE WITH 4" 400# C-STL
29	BRANCH CONN.	3/4"		SCH. 40 S-ST TYPE 304	1164	1750	
30	VENTURI	←	REF	DWG H-1-5342 →	1100	1600	
31	FLEX. CONNECTOR	1"	.125	TEFLON & SST BRAID	1100	1600	
32	VALVE, GATE	4"		400# ASTM 216-GR-WCB	800	1200	
33	THRED-O-LET	1½"		EX-STRONG C-STL	800	1200	
34	FLANGE	12"		400# ASTM-A105-46-GR-1	800	1200	
35	PIPE	12"		SCH. 40 C-STL	600	900	REPLACE WITH 12" SCH 80 PIPE, C-STL
36	VALVE	12"		300# C STL	600	900	(2) REPLACE WITH 400# C-STL
37	CHECK VALVE	12"		300# C STL	600	900	(2) REPLACE WITH 400# C-STL
38	PIPE	4"		SCH. 80 A-106-GR-A	1280	1920	
39	VALVE	4"		300# SST TYPE 304	600	900	(5) REPLACE WITH 400# C-STL
40	CHECK VALVE	4"		300 SST TYPE 304	600	900	(2) REPLACE WITH 400# C-STL
41	FLANGE	8"		400# ASTM A-105-46-GR-1	800	1200	
42	PIPE	8"		SCH. 60 ASTM A-106-GR.A	800	1200	
43	VALVE, GATE	8"		400# ASTM A-216-GR WCB	800	1200	
44	CHECK VALVE	8"		400# "	800	1200	
45	VALVE	2½"		300# SST TYPE 304	600	900	(4) REPLACE WITH 400# C-STL
46	VALVE W/BLIND FLG	2"		1200# C-STL FLANGE	2400	3600	
47	STRAINER	4"		300# SST TYPE 304	600	900	(1) REPLACE WITH 400# C-STL
48	VALVE, GLOBE	4"		300# SST TYPE 304	600	900	(1) REPLACE WITH 400# C-STL
49	VALVE, GATE	2"		600# C-STL	1200	1800	
50	PIPE	4"		SCH 40 ASTM A-106 GR A	776	1150	(AS REQ'D) REPLACE MTL WITH A-106 GR B
51	FLANGE	2½"		600# C-STL	1200	1800	
52	PIPE	2"		SCH 40 ASTM A-106 GR-A	730	1100	(AS REQ'D) REPLACE MTL WITH A-106 GR B
53	PIPE	2"		SCH 80 C-STL	1330	2000	
54	PIPE	2½"		SCH 40 C-STL	1000	1500	
55	REDUCER WITH FLGS	5"×4"		SCH 80 WITH 400# FLG T-304	800	1200	(48) NEW FITTINGS FOR 5" GATE VALVE

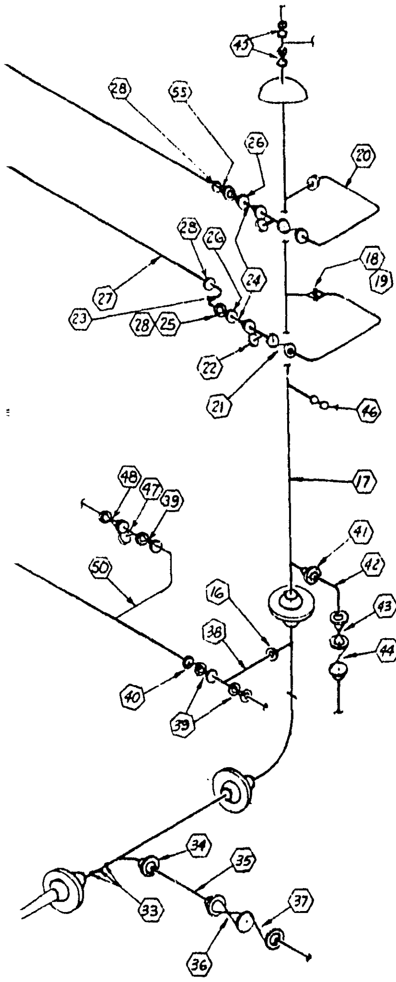

GENERAL NOTES...

1. ALL INSTRUMET TUBING TO BE CHECKED FOR 800 PSI OPERATING PRESSURE.
2. PIPING TO BE HYDROSTATIC TESTED AT 1200 PSI.

DWG NO	DRAWING TITLE
H-1-26763	PROCESS PIPING FRONT FACE - 105 F
H-1-26758	VALVE PIT TO RISER - 105 F
H-1-26755	PROCESS PIPING VALVE PIT - 105 F
H-1-26478	PROCESS PIPING FRONT FACE - 105 D
H-1-26473	VALVE PIT TO RISER - 105 D
H-1-26470	PROCESS PIPING VALVE PIT - 105 D
H-1-26111	PROCESS PIPING FRONT FACE - 105 B
H-1-26103	PROCESS PIPING VALVE PIT - 105 B
H-1-26102	VALVE PIT TO RISER - 105 B
SK-1-4089	PRESSURE RATINGS 105 H
SK-1-4088	PRESSURE RATINGS 105 DR
SK-1-4087	PRESSURE RATINGS 105 C

REFERENCE DRAWINGS
NEXT USED ON

NO	DESCRIPTION	REV BY DATE	APP'D BY	FOR	DATE
	REVISIONS				

CLASSIFICATION
NONE
CLASSIFIED BY
DATE 3/29/60

DWG NO. SK-1-4090 — — ~

SCALE: NONE
DRAWN W. McGreg DATE 2-24-60
CHECKED DATE
DATE 3/29/60
APPROVALS: FOR CE/U DATE 3-1-60
DES. ENG MONDT UNIT P&M
INST. NO. 10561
PROJECT NO. DO-1208

U. S. ATOMIC ENERGY COMMISSION
HANFORD ATOMIC PRODUCTS OPERATION
GENERAL ELECTRIC

PROCESS WATER PIPING
PRESSURE RATINGS
VALVE PIT TO INLET NOZZLE

REACTOR INCREASE PRODUCTION
BLDG. NO 105 B-D-F
INDEX NUMBER 8401-01
DWG NO SK-1-4090 — —

END

DATE
FILMED

12/17/92