Association for Information and Image Management
1100 Wayne Avenue, Suite 1100
Silver Spring, Maryland 20910
301/587-8202

Centimeter

Inches

MANUFACTURED TO AIIM STANDARDS
BY APPLIED IMAGE, INC.

1 of 2

UNCLASSIFIED

DPSTD-AFCT-77-12
Revision 1

TECHNICAL DATA SUMMARY -

MIXED OXIDE FUEL FABRICATION FACILITY COPROCESSING CASE

INFORMATION ONLY

Prepared by

J. P. Howell
D. T. Rankin
J. D. Scarbrough

Approved by

R. T. Huntoon, Research Manager
Nuclear Materials Division

August 1979

E. I. DU PONT DE NEMOURS AND COMPANY
SAVANNAH RIVER LABORATORY
AIKEN, SOUTH CAROLINA 29801

PREPARED FOR THE U. S. DEPARTMENT OF ENERGY UNDER CONTRACT AT(07-2)-1

UNCLASSIFIED
MASTER

DISTRIBUTION OF THIS DOCUMENT IS UNLIMITED

UNCLASSIFIED
DOES NOT CONTAIN
UNCLASSIFIED CONTROLLED
NUCLEAR INFORMATION
ADC & Reviewing Official: RL Collins/CLASS. Amy Ltd
(Name and Title)
Date: 5/10/92

UNCLASSIFIED

CONTENTS

1. Introduction 1

2. Product Description 5

   2.1 UO_2-PuO_2 Products 5

      2.1.1 General 5

      2.1.2 Number, Vendor, and Fuel Requirements of LWRs 6

      2.1.3 W Market Survey 6

      2.1.4 Characteristics of LWR (U-Pu)O_2 Assembly Designs 9

      2.1.5 Characteristics of LWR (U-Pu)O_2 Fuel Pellets and Encapsulated Fuel Rods 10

   2.2 Specifications 12

3. General Description of Required Facility 13

   3.1 General Requirements 13

      3.1.1 Design Criteria 13

      3.1.2 Support Facilities 16

   3.2 Major Process Operations 17

   3.3 Layout of Facility 20

   3.4 Auxiliary Services 24

      3.4.1 Process 24

4. Process Description 28

   4.1 Process Streams and Material Balance 33

      4.1.1 Process Streams 33

      4.1.2 Heavy Metal Material Balance 33

      4.1.3 Detailed Material Balance 37

   4.2 Master Blend Preparation 40

   4.3 UO_2 Preparation 40

      4.3.1 Receive 40

      4.3.2 Screen 41

UNCLASSIFIED
DOES NOT CONTAIN
UNCLASSIFIED CONTROLLED
NUCLEAR INFORMATION

DISCLAIMER

This report was prepared as an account of work sponsored by an agency of the United States Government. Neither the United States Government nor any agency thereof, nor any of their employees, makes any warranty, express or implied, or assumes any legal liability or responsibility for the accuracy, completeness, or usefulness of any information, apparatus, product, or process disclosed, or represents that its use would not infringe privately owned rights. Reference herein to any specific commercial product, process, or service by trade name, trademark, manufacturer, or otherwise does not necessarily constitute or imply its endorsement, recommendation, or favoring by the United States Government or any agency thereof. The views and opinions of authors expressed herein do not necessarily state or reflect those of the United States Government or any agency thereof.

This report has been reproduced directly from the best available copy.

Available to DOE and DOE contractors from the Office of Scientific and Technical Information, P. O. Box 62, Oak Ridge, TN 37831; prices available from (615) 576-8401.

Available to the public from the National Technical Information Service, U. S. Department of Commerce, 5285 Port Royal Rd., Springfield, VA 22161

4.4 Cladding Preparation 41

4.4.1 Receiving and Inspection of Cladding, Springs, and End Plugs 41

4.4.2 Bottom End Cap Welding 41

4.4.3 Weld Inspection 41

4.5 Pellet Fabrication 42

4.5.1 Batching and Blending of Master Blend and UO_2 42

4.5.2 Milling 42

4.5.3 Compact Powder 42

4.5.4 Granulate and Size 43

4.5.5 Press Pellets 43

4.5.6 Sintering 44

4.5.7 Grinding 44

4.5.8 Pellet Inspection 44

4.6 Encapsulation 44

4.6.1 Form Pellet Stack 44

4.6.2 Rod Loading 45

4.6.3 Decontamination 45

4.6.4 Top End Cap Welding 45

4.6.5 Pressurization (for PWR only) 46

4.6.6 Top End Cap Weld Inspection 46

4.6.7 Rod Inspection 46

4.6.8 Bundle Assembly 46

4.6.8.1 PWR 46

4.6.8.2 BWR 47

4.6.9 Bundle Inspection and Repair 47

4.7 Bundle Storage 47

4.8 Shipping 47

4.9 Rod Reject and Repair 48

4.10 Scrap Recovery and Waste Handling 48

4.10.1 General 48

4.10.2 Sorting 48

4.10.3 Scrap Dissolution 49

4.11 Quality Assurance/Quality Control (QA/QC Program for the Fuel Fabrication Facility) 50

4.12 Storage Requirements 50

5. Equipment Description 52

5.1 General Requirements 52

5.2 Material Transfer 52

5.2.1 Powder Transfer 52

5.2.2 Pellet Transfer 53

5.2.3 Rods and Bundles 53

5.3 $(U\text{-}Pu)O_2$ Master Blend Equipment 53

5.3.1 Receiving 53

5.3.2 Loading $(U\text{-}Pu)O_2$ Master Blend 54

5.4 UO_2 Equipment 54

5.4.1 Receiving 54

5.4.2 Unloading UO_2 54

5.5 Cladding and PWR Bundle Hardware Equipment 54

5.5.1 Receiving 54

5.5.2 Inspection and Cleaning 54

5.5.3 Welding Bottom End Cap 55

5.5.4 Weld Inspection 55

5.6 BWR Bundles from UO_2 Plant 55

5.6.1 Receiving 55

5.6.2 Unpackaging, Inspection, and Storage 55

5.7 Pellet Fabrication Equipment 56

5.7.1 Blending and Milling 56

5.7.2 Compacting 56

5.7.3 Granulating 56

5.7.4 Pressing 57

5.7.5 Sintering 57

5.7.6 Grinding 58

5.7.7 Inspecting 58

5.8 Encapsulation Equipment 59

5.8.1 Form Pellet Stack and Load Rod 59

5.8.2 Decontamination of Loaded Rods 59
5.8.3 Welding of Top End Cap and PWR Rod Pressurization 59
5.8.4 Top End Cap Weld Inspection 60
5.8.5 Finished Rod Inspection 60
5.8.6 Bundle Assembly 60
5.8.7 Final Bundle Inspection 61
5.9 Storage of Bundles 61
5.10 Shipping 61
5.11 Rod Reject and Repair 62
5.12 Damaged Bundle Repair 62
5.13 Scrap Recovery 62
5.14 Equipment Requirements 62
6. Nuclear and Process Safety 64
6.1 Fire 64
6.2 Explosion 64
6.3 Window and Glove Failures 64
6.4 Criticality 65
6.4.1 General 65
6.4.2 Subcritical Limits 65
6.5 Radiation and Shielding 70
6.5.1 General Requirements 70
6.5.2 Initial Shielding Guides 70
6.5.2.1 Methods of Calculations 72
6.5.2.2 Bases for Calculations 72
6.5.3 Shielding Design Criteria 76
6.5.3.1 Shield Materials 76
6.5.3.2 Shielding Design Thicknesses 77
6.6 Industrial Safety 77

Appendix A A-1

Appendix B B-1

Appendix C C-1

LIST OF TABLES

1 Assembly Designs Selected for Manufacture in FFF 5

2 PWR Vendors, Reactors, and Thermal Power 7

3 BWR Vendors, Reactors, and Thermal Power 7

4 1986 Product Mix, Domestic Reloads Only 8

5 Characteristics of LWR $(U\text{-}Pu)O_2$ Assembly Designs Selected for Manufacture in FFF 9

6 Characteristics of Pellets and Rods in $(U\text{-}Pu)O_2$ Assembly Designs Selected for Manufacture in FFF 11

7 Specifications 12

8 Average Daily Quantities for FFF Process Streams 35

9 Average Daily Heavy Metal Material Balance for BWR and PWR Production 36

10 Production Rate Requirements, 1986 38

11 Amounts and Activities of Plutonium - Contaminated Waste from Fuel Fabrication Facility 49

12 MOX Facility Storage Requirements 51

13 Subcritical Limits for PWR Process Operations 67

14 Effect of Moisture on Subcritical Limits 67

15 Criticality Safe Mass Limit Estimates for $(Pu\text{-}U)O_2$ Mixed Oxide Materials 68

16 Criticality Design Analysis Safe Geometry Dimensions for COMOX and MOX Process Containers 69

17 Subcritical Limits for a 10% PuO_2 - 90% UO_2 Oxide 71

18 Expected Isotopic Content of Pu_2 for Startup Interim and Equilibrium Conditions 71

19 Expected Dose Rates from PWR Powder and Pellets with wt % PuO_2, mrems/hr - Unshielded 73

20 Required Shielding for Continuously and Intermittently Occupied Areas with 6 wt % PuO_2 74

21 Required Shielding for Continuously and Intermittently Occupied Areas with 6 wt % PuO_2 75

22 Shield Design Thicknesses for COMOX and MOX Containing Powder Process Areas in a Large-Scale Fuel Fabrication Plant 78

23 Shield Design Thicknesses for Miscellaneous Process Areas in a Large-Scale Fuel Fabrication Plant 79

B-1 Quality Assurance Criterion B-3

B-2 Table of Contents of Quality Assurance Program B-10

C-1 Unit Processes for the Fuel Fabrication Facility C-12

C-2 Accountability Measurement Summary C-14

C-3 Scrap, Waste, and Analytical Samples Generated in Fuel Fabrication Process C-15

C-4 Summary of Analytical Samples for Chemical Analysis C-22

LIST OF FIGURES

1 Plant Layout, Six-Line Concept 21

2 Mixed Oxide Fuel and Fuel Assemblies Process Flowsheet 29

3 Process Streams in the FFF 34

A-1 Westinghouse Fuel Assembly A-2

A-2 Fuel Assembly Cross Section 17 x 17 A-3

A-3 Fuel Assembly Outline 17 x 17 A-4

A-4 Fuel Rod Schematic A-5

A-5 Plan View A-7

A-6 Elevation View A-8

A-7 Top Grid Nozzle Attachment A-9

A-8 Guide Thimble to Bottom Nozzle Joint A-11

A-9 Fuel BWR Assembly A-12

A-10 Typical BWR Core Cell A-13

A-11 BWR Fuel Bundle A-15

A-12 Schematic of Water Rod Spacer Positioning Arrangement A-16

B-1 Functional Organization for Mixed Oxide Fuel Fabrication Plant B-12

B-2 Relationship of QA Requirements and Implementing Documentation B-17

B-3 Manufacturing Procedures and Documents Required for Manufacturing to Comply with Product Assurance Manual B-19

B-4 Engineering Procedures Required for Engineering Department to Comply with Product Assurance Manual B-20

B-4A Subtier Procedures Required to Implement Engineering Manual B-21

B-4C Subtier Procedures and Documents Required to Implement Engineering Manual B-22

B-4C Subtier Procedures and Documents Required to Implement Engineering Manual B-23

B-4D Subtier Procedures and Documents Required to Implement Engineering Manual B-24

B-4E Subtier Procedures and Documents Required to Implement Engineering Manual B-25

B-4F Subtier Procedures and Documents Required to Implement Engineering Manual B-26

B-4G Subtier Procedures and Documents Required to Implement Engineering Manual B-27

B-5 Quality Control Procedures Required for Quality Control Department to Comply with Product Assurance Manual B-28

B-5A Quality Control Instructions Required to Implement Quality Control Procedure "Control of Special Processes." B-29

B-5B Quality Control Instructions Required to Implement Quality Control Procedure "Inspection" B-30

B-5C Quality Control Instructions Required to Implement Quality Control Procedure "Control of Measuring and Test Control" B-31

B-5D Records Program and Procedures Required to Comply with Quality Control Procedure "Quality Assurance Records" B-32

C-1 Block Diagram of Mixed Oxide Fuel Fabrication Process C-4

C-2 Diagram of Mixed Oxide Fuel Fabrication Process C-9

TECHNICAL DATA SUMMARY –

MIXED OXIDE FUEL FABRICATION FACILITY COPROCESSING CASE

1. INTRODUCTION

This revised Technical Data Summary (TDS) provides basic technical data, including product and equipment requirements and process description for conceptual design and cost estimate studies of a reference facility. The facility will fabricate fuel assemblies for light water reactors (LWR) from $(U\text{-}Pu)O_2$ feed coproduced from spent LWR fuel. The Fuel Fabrication Facility (FFF) will be colocated within an integrated LWR uranium-plutonium reprocessing complex consisting of facilities for fuel storage, reprocessing, conversion, refabrication, and waste processing. The conceptual design and cost estimate of the FFF is part of a general design integration study (DIS) to define an optimized system to dispose of spent LWR fuel. Du Pont's effort on the fuel fabrication portion of the DIS will terminate with a preliminary venture guidance appraisal (VGA) for the coprocessing case. Program responsibility for fuel fabrication, including the VGA for a reference $(U\text{-}Pu)O_2$ fabrication plant for the coprocessing case, has been transferred to Pacific Northwest Laboratory.

The reference process for the DIS was changed from separate processing of plutonium to coprocessing. In coprocessing, plutonium from reprocessed spent fuel is not available in a separate stream.[1] The main product of coprocessing is a mixture of UO_2 and PuO_2 that is suitable as feed for the FFF: a separate byproduct of uranium is also obtained. In the FFF, the $(U\text{-}Pu)O_2$ coproduct is fabricated into pellets, encapsulated into rods, and assembled into bundles for refueling LWRs.

The objective of the Technical Data Summary (TDS) is to provide the technical data required to design a versatile facility capable of manufacturing fuel bundles for refueling pressurized water reactors (PWRs) and boiling water reactors (BWRs). This facility must be cost effective and must satisfy material safeguards and environmental requirements.

This document revises the preliminary TDS[2] on coprocessing issued in December 1977, and contains information obtained from the supporting research and development (R&D) program through May 1978. The primary source of the information on fuel fabrication has been the Westinghouse Nuclear Fuels Division (W). The General Electric Uranium Management Corporation (GE) and the Hanford Engineering Development Laboratory (HEDL) served as consultants. This revised TDS represents final input to the development of the preliminary VGA for the coprocessing case.

Assumptions

Several options are available for producing assembled $(U\text{-}Pu)O_2$ fuel bundles within the spent fuel disposition complex. These options include fuel bundles which can be assembled

1) in the FFF with rod hardware and bundle components purchased from commercial vendors.

2) in the FFF with rod hardware and bundle components manufactured onsite.

3) onsite by the various commercial fuel vendors in separate bundle assembly facilities. In this option, the FFF would produce only $(U\text{-}Pu)O_2$ fuel rods which would be sold to the various fuel vendors. Rod hardware could be either manufactured onsite or obtained from commercial vendors.

For the purpose of this TDS, Option 1 is assumed.

Specific assumptions used as bases for developing this revised issue of the TDS are given below. These assumptions represent current thinking on the fabrication of reprocessed fuel for LWRs and are based, in part, upon discussions with commercial fuel developers and vendors, Department of Energy (DOE) contractors, and contributors to TDSs for the Conversion and Reprocessing Facilities.

1) The product of the FFF will be fuel bundles for refueling PWRs and BWRs. To simplify the design of the FFF, only fuel bundle designs with expected high demand will be manufactured.

2) The conversion facility (CF) will be closely coupled to the FFF. The CF will supply a coprocessed $(U\text{-}Pu)O_2$ powder which meets specifications to the FFF. The plutonium oxide content of this feed will be nominally 10 wt %.[3] This feed will serve as a master mix for LWR fuel fabrication.

3) The total wt % of PuO_2 in the PWR and BWR fuel pellets will be

	Minimum	*Average*	*Maximum*
PWR	2	4.5	6
BWR	2	5.0	10

4) To simplify design of the FFF, the diluent to reduce the plutonium content from 10 wt % to the required concentrations for fuel pellets will be natural UO_2 powder purchased from a commercial supplier.

5) Pellets of different weights, dimensions, and fissile content will be required for encapsulation in fuel rods of varying design.

6) The metallic components of the rods (clad, end plugs, spring, etc.) will be purchased from commercial vendors. Cladding and end plugs made of Zircaloy-2 and -4 will be required for BWRs and PWRs, respectively. Stainless steel cladding will not be required in the FFF.

7) Ceramic pellets will not be required at the ends of PWR $(U\text{-}Pu)O_2$ fuel rods to serve as thermal guards. Natural UO_2 pellets will be required at the top and bottom ends of the BWR $(U\text{-}Pu)O_2$ fuel rods. These pellets will be purchased from a commercial vendor.

8) The FFF will be designed for 100% inspection of all sintered fuel pellets and encapsulated rods. A statistical inspection will be made of cladding and related hardware in the FFF, provided that a 100% inspection is made at the vendor's shop.

9) All bundle components other than the $(U\text{-}Pu)O_2$ fuel rods will be purchased from commercial vendors. These components will include bundle skeletons for PWRs and assembled bundles with dummy rods in the $(U\text{-}Pu)O_2$ rod positions for BWRs.

10) The FFF will be sized for an average plutonium output of 100 kg Pu/day[4] at 4.67 wt %, PuO_2 in the coprocessed fuel. At this average plutonium production rate, the total daily output of the FFF will be approximately 2.2 metric tons of heavy metal (MTHM).* Approximately 0.33 MTHM of $(U\text{-}Pu)O_2$ scrap (15% of the FFF output) will also be recycled each day.

11) Clean and dirty** $(U\text{-}Pu)O_2$ scrap will be packaged separately, assayed for accountability, and shipped to the Scrap Recovery Facility (SRF) for recovery. (A separate TDS will cover the details for the SRF.)

---

*Heavy metal includes plutonium and uranium.

**Clean scrap meets purity specifications; dirty scrap does not.

12) Wastes from the FFF will be processed in common waste facilities along with wastes from other colocated facilities.

2. PRODUCT DESCRIPTION

2.1 UO_2-PuO_2 Products

2.1.1 General

Fuel assemblies (bundles*) for refueling BWRs and PWRs will be the product of the FFF. Seven assembly designs have been selected as potential products of the FFF (Table 1), based upon a market forecast made for the Department of Energy by the Westinghouse Nuclear Fuel Division (W).[5] These seven designs show the highest demand for mixed oxide fuel. Eliminating low tonnage and unique fuel bundle designs as potential products of the FFF should simplify the design. Reactors operating with fuel assembly designs other than those listed in Table 1 can be refueled completely with UO_2 fuel assemblies.

TABLE 1

Assembly Designs Selected for Manufacture in FFF[5]

	Vendor	*Type*	*Array*	*Assemblies*	*MT Pu/yr*
1	W	PWR	17 × 17	445	9.2
2	W	PWR	15 × 15	155	3.2
3	B&W	PWR	17 × 17	78	1.6
4	B&W	PWR	15 × 15	123	2.6
5	C-E	PWR	16 × 16	104	2.0
6	C-E	PWR	14 × 14	73	1.3
7	GE	BWR	8 × 8	2594[a]	10.1
			Total	3572	30.0

a. 26 MOX rods/bundle.

*Assembly and bundle are interchangeable; these two words arise from a difference in terminology by specific vendors.

2.1.2 Number, Vendor, and Fuel Requirements of LWRs

A list of LWR vendors, number of reactors, and thermal power is given in Tables 2[6] and 3[6]. Thw PWR vendors are Westinghouse Electric Corporation (W), Combustion Engineering (C-E), and Babcock and Wilcox (B&W). General Electric Company (GE) is currently the only BWR vendor and has about 1/3 of the overall LWR reactor business. W has 60% of the PWR business and 40% overall.

There will be approximately 2 PWRs for every one BWR in the mid-1980's.[6] 145 PWRs are in operation, are being built, or are in the planning stage; 74 BWRs are in similar stages. The average thermal power for BWRs and PWRs is approximately the same. Reactors in the planning stage are being designed for higher thermal output than reactors under construction or in operation. This trend points out the tendency for larger, more efficient reactors in the future.

The fuel requirements for BWRs and PWRs vary with the size of the reactor. The core of a BWR is larger than the core of a PWR for the same electrical output. However, the annual fuel reload requirements are approximately the same — 1/4 of a BWR core is refueled compared with 1/3 of a PWR core. For example, the core of a BWR with 1000 megawatt electrical power output would contain about 129 MTHM fuel compared with about 81 MTHM in a PWR core of equivalent electric power output. The annual reload requirements for each reactor would then be about 30 MTHM.[7]

Each annual PWR and BWR reload of 30 MTHM contains about 10 MT of $(U\text{-}Pu)O_2$ fuel. In the PWR case, all fuel rods in a $(U\text{-}Pu)O_2$ assembly contain $(U\text{-}Pu)O_2$ fuel, but only about 1/3 of the reload assemblies contain MOX fuel. In the BWR case, all reload bundles contain MOX fuel, but only 40% of the fuel in a bundle contains MOX fuel.

2.1.3 W Market Survey[5]

The fuel assembly designs and assigned tonnage recommended for production in the FFF (Table 1) are based upon a market forecast by W (Table 4). The fuel reload requirements of all domestic BWRs and PWRs were evaluated for the 1986-1988 period. The year 1986 is the earliest that the FFF could come online. The forecast was extended for 1987 and 1988 to determine that no major changes from 1986 requirements would occur.

TABLE 2

PWR Vendors, Reactors, and Thermal Power[6]

	PWR Operable		PWR Being Built		PWR Planned		PWR Total	
	Reactors	MW, therm	Reactors	MW, therm	Reactors	MW, therm	Reactors	MW, therm
Westinghouse	22	4,687	32	105,651	31	99,637	85	252,159
Avg		2,130		3,300		3,215		2,965
%	63%[a]	61%[b]	63%[c]	64%	53%[d]	51%[e]	59%[f]	57%[g]
Combustion-Engineering	6	13,772	9	30,456	16	56,353	31	100,581
Avg		2,295		3,384		3,420		3,245
%	17%[a]	18%[b]	17%[c]	18%[h]	27%[d]	28%[e]	21%[f]	23%[g]
B & W	7	15,990	10	293,620	12	40,857	29	86,209
Avg		2,285		29,362				2,970
%	20%[a]	21%[b]	20%[c]	18%[h]	20%[d]	3,205	20%[f]	20%[g]
Total	35	76,633	51	165,[illegible]69	59	196,847	145	438,949
Avg		2,190		3,245		3,335		3,025
%	24%[f]	17%[g]	35%[f]	38%[g]	41%[f]	45%[g]	66.2%[i]	66.8%[j]

a. % of total number of PWRs in operation.
b. % of total thermal power of PWRs in operation.
c. % of total number of PWRs being built.
h. % of total thermal power of PWRs being built.
d. % of total number of PWRs planned.
e. % of total thermal power of PWRs planned.
f. % of total number of all PWRs.
g. % of total thermal power of all PWRs.
h. % of total number of all LWRs.
i. % of total thermal power of all LWRs.

TABLE 3

BWR Vendors, Reactors, and Thermal Power[6]

	BWR Operable		BWR Being Built		BWR Planned		BWR Total	
	Reactors	MW, therm	Reactors	MW, therm	Reactors	MW, therm	Reactors	M, therm
Combustion - Engineering	0	0	0	0	2	7,166	2	7,166
Avg						3,583		3,583
%					7%[a]	7%[b]	3%[c]	3%[d]
GE	22	46,762	21	64,712	28	99,035	71	210,509
Avg		2,040		3,080		3,535		2,965
%	96%[e]	99.6%[f]	100%[g]	100%[h]	93%[a]	93%[b]	96%[c]	97%[d]
Allis Chalmers	1	165	0	0	0	0	1	165
Avg		165						165
%	4%[e]	0.4%[f]					1%	1%[d]
Total	23	46,927	21	64,712	30	106,201	74[c]	217,840
Avg		2,040		3,080		3,540		2,940
%	31%[c]	22%[d]	28%[c]	30%[d]	41%[c]	48%[d]	33.8%[i]	33.2%[j]

a. % of total number of BWRs planned.
b. % of total thermal power of BWRs planned.
c. % of total number of all BWRs.
d. % of total thermal power from all BWRs.
e. % of total number of BWRs in operation.
f. % of total thermal power of BWRs in operation.
g. % of total number of BWRs being built.
h. % of total thermal power of BWRs being built.
i. % of total number of all LWRs.
j. % of total thermal power from all LWRs.

TABLE 4

1986 Product Mix,[5] Domestic Reloads Only

W Design	*Total Reload Market, Metric Tons Total Fuel*	*Representative Reload Market, Metric Tons Total Fuel*	*% of Representative Market*	*FFF Production Allotment MT Pu/yr*
17 × 17	852.8	910.7	30.6	9.2
17 × 17 XL	57.9	-	-	-
15 × 15	214.9	317.4	10.7	3.2
14 × 14	91.0	-	-	-
Unique	11.5	-	-	-
	1,228.1	1,228.1	41.3	12.4
B&W Design				
17 × 17	156.8	156.8	5.3	1.6
15 × 15	251.6	251.6	8.5	2.6
	408.4	408.4	13.8	4.2
C-E Design				
15 × 16	202.6	202.6	6.8	2.0
15 × 15	17.8	-	-	-
14 × 14	113.9	131.7	4.4	1.3
	334.3	334.3	11.2	3.3
GE Design				
8 × 8	1,001.5	1,001.5	33.7	10.1
Totals	2,972.3	2,972.3	100.0	30.0[a]

a. 100 kg Pu/Day × 300 Days/Year = 30 Metric Tons Pu_T/Year.

The W forecast identified representative reactor core designs and the reload requirements in MTHM (Table 4; Columns 1 and 2). These fuel load requirements were then redistributed to high-tonnage bundle designs (Column 3). The percentage that each fuel assembly design represented the market was then calculated (Column 4). The production allotment (MT of Pu) to each bundle design in the FFF was then assigned according to an output of 100 kilograms of total plutonium per day or 30 MT of total plutonium per year (Column 5).

2.1.4 Characteristics of LWR $(U\text{-}Pu)O_2$ Assembly Designs

Information about the characteristics of the seven LWR $(U\text{-}Pu)O_2$ assembly designs selected for fabrication in the FFF (Table 5) has been collected from several sources.[7-12]

TABLE 5

Characteristics of LWR $(U\text{-}Pu)O_2$ Assembly Designs[8-12] Selected for Manufacture in FFF

Assembly	*Vendor* →	*W*	*W*	*C-E*	*C-E*	*B&W*	*B&W*	*GE*
Rod array		15 x 15	17 x 17	14 x 14	16 x 16	15 x 15	17 x 17	8 x 8
Number of fuel rods		-	264	-	216	-	264	63
Number of water rods		-	-	-	-	-	-	1
Number of compositions								
- $(U\text{-}Pu)O_2$[a]		1	1	1	1	1	1	3
- UO_2								4
- $UO_2\text{-}Gd_2O_3$								1
Number of $(U\text{-}Pu)O_2$ rods								
- Maximum		-	264	-	216	-	264	26
- Minimum		-	264	-	216	-	264	10
Total PuO_2 in $(U\text{-}Pu)O_2$, %								
- Average		4.5	4.5	4.5	4.5	4.5	4.5	5.0
- Minimum		2	2	2	2	2	2	2
- Maximum		6	6	6	6	6	6	10
Overall length, in.		159.8	159.8	-	-	165.6	-	-
Overall weight, lbs		1440	14[illegible]3	-	-	1550	-	625
Active fuel height, in.		144	144	-	150	144	143	148
Fuel rod pitch, in.		0.563	0.496	-	0.580	0.568	0.501	0.640
- Average kW/ft of fuel rod		-	5.4	-	5.2	-	5.2	6.0
- Max Fuel temp. DOP-F		-	3450	-	3200	-	3690	3325
Average Power Density, kW/later Core		-	104.5	-	95.9	-	101.7	56.0

a. PuO_2 isotopic composition must be constant for each $(U\text{-}Pu)O_2$ composition in a reload but may vary between the different compositions.

Several important characteristics of these seven fuel assemblies are the following

- Although each PWR and BWR reload order requires three different $(U\text{-}Pu)O_2$ compositions, an individual PWR assembly requires only one $(U\text{-}Pu)O_2$ composition. Individual BWR bundles require three $(U\text{-}Pu)O_2$ compositions.

- All fuel rods in PWR assemblies will contain $(U\text{-}Pu)O_2$ fuel. In BWR assemblies, $\sim$40% of the fuel rods (about 26 rods in, or an 8 x 8 BWR bundle) will contain $(U\text{-}Pu)O_2$ fuel.

- Individual PWR and BWR $(U\text{-}Pu)O_2$ fuel rods will contain only one composition.

- The average concentration of total PuO_2 will be 4.5% for PWRs and 5.0% for BWRs. The total PuO_2 concentration will vary from 2 to 10 wt % for BWRs and 2 to 6 wt % for PWRs.

- The Pu isotopic composition should be constant for each of the individual $(U\text{-}Pu)O_2$ compositions in a reload, but it may vary between different compositions.

Descriptions of a typical PWR assembly and a typical BWR bundle are presented in Appendix A.[13] Descriptions of PWR assembly designs and BWR bundle designs for specific reactors were presented in Appendix A of the preliminary TDS for the separated case.[14]

2.1.5 Characteristics of LWR $(U\text{-}Pu)O_2$ Fuel Pellets and Encapsulated Fuel Rods

Intermediate products of the FFF will be $(U\text{-}Pu)O_2$ fuel pellets and encapsulated fuel rods. The characteristics of these intermediate products will vary according to the requirements of the seven selected fuel assembly designs (Table 6). Production of these intermediates may be on a batch basis to fill specific orders for fuel from the utilities. However, fuel rods of common composition (reactivity) may be produced ahead of time and stored until needed to reduce down time for clean out and to minimize scrap from changing PuO_2 concentrations.

There are several major differences between the characteristics of PWR and BWR fuel rods

- The clad material for PWR is Zircaloy-4; Zircaloy-2 is the BWR-clad material.

- The Zircaloy-2 is autoclaved before fueling; the Zircaloy-4 is fueled as received.

- All fuel rods contain an He atmosphere. PWR fuel rods are pressurized with He between 300 and 600 psi. BWR fuel rods are evacuated and backfilled with He to about 1 atmosphere.

Variations also exist in pellet weights and dimensions and rod dimensions among the various PWR bundle designs (Table 6). After grinding, the pellet weight will vary from 5 to 11 grams, the diameter from 0.324 to 0.370 inch and the pellet height from 0.35 to 0.6 inch. The rod OD will vary from 0.374 to 0.430 inch and the clad thickness from 22.5 to 26.5 mils. Fuel pellet weight and dimensions for all BWR rods will be constant: 9.65 grams and 0.416-inch diameter by 0.420-inch height. The rod OD will be 0.493 inch with a clad thickness of 34 mils.

TABLE 6

Characteristics of Pellets and Rods in $(U\text{-}Pu)O_2$ Assembly Designs Selected for Manufacture in FFF[8-12]

Reactor Type →	*PWR*						*BWR*
Vendor →	*W*	*W*	*C-E*	*C-E*	*B&W*	*B&W*	*GE*
Assembly	15 × 15	17 × 17	14 × 14	16 × 16	15 × 15	17 × 17	8 × 8
Fuel Rod							
Number of $(U\text{-}Pu)O_2$ compositions	1	1	1	1	1	1	1
PuO_2 Content, %							
- Average	4.5	4.5	4.5	4.5	4.5	4.5	5.0
- Minimum	2	2	2	2	2	2	2
- Maximum	6	6	6	6	6	6	10
$(U/Pu)O_2$ weight, g	-	-	-	-	-	-	3000
Clad-free Space							
- atmosphere	He/air	He/air	He/air	He/air	He/air	He/air	He
- pressure, atm	>20	>20	>20	>20	>20	>20	~1
Clad							
- Material	Zircaloy-4	Zircaloy-4	Zircaloy-4	Zircaloy-4	Zircaloy-4	Zircaloy-4	Zircaloy-2
- OD, in.	0.422	0.374	-	0.382	0.430	0.379	0.493
- Thickness, in.	0.0243	0.0225	-	0.025	0.0265	0.0235	0.0340
Fuel Pellet							
Material	$(U\text{-}Pu)O_2$	$(U\text{-}Pu)O_2$	$(U\text{-}Pu)O_2$	$(U\text{-}Pu)O_2$	$(U\text{-}Pu)O_2$	$(U\text{-}Pu)O_2$	$(U\text{-}Pu)O_2$
Form	Solid	Solid	Solid	Solid	Solid	Solid	Solid
OD, In.	0.3659	0.3225	0.3795	0.325	0.370	0.324	0.416
Height, in.	0.600	0.530	0.600	0.390	0.7	0.375	0.420
Density, % TD	95	95	95	95	93	94	94
~Weight, g[a]	10.64	7.25	10.18	5.32	12.38	5.14	9.65
O/M	2.0	2.0	2.0	2.0	2.0	2.0	2.0

a. Weights are calculated from data in the W Market Survey.[5]

2.2 Specifications

Representative specifications for feed material, intermediate products and final products were requested from W for PWR assembly production and from GE for BWR bundle production. W supplied specifications for most feed materials[15] along with a list of comparable standard specifications (Table 7). The standard specifications are preferred to the W industrial specifications because the industrial specifications have been edited to delete proprietary information.

Because of the high proprietary nature of product specifications, specifications are available only for $(U\text{-}Pu)O_2$ pellets (Table 7). Specifications for rod, bundles, and assemblies are not available. General information on the bundles and assemblies are included in Appendix A.

TABLE 7

Specifications

A. Feed Materials	*Westinghouse*	*Other*
UO_2 Powder	NFD-31017, Rev 5	ASTM C753-73
Master Blend Powder	-	-
Fuel Rod Springs	NFD-31009, Rev 11	ASTM A313-76
Zircaloy-4 Tubing	-	-
Thimble and Instrumentation	NFD-31003, Rev 8	ASTM B353-71
Cladding	NFD-31008, Rev 9	
Fuel Rod and Thimble End Plugs	NFD-31006, Rev 11	ASTM B351-73
Helium for Fuel Rods	-	MIL-P-27407, USAI
B. Products		
Pellets	NFD-31041	ASTM C833-76
Rods	-	-
Assemblies	-	-

3. GENERAL DESCRIPTION OF REQUIRED FACILITY

3.1 General Requirements

A large versatile facility is required to fabricate the six PWR fuel assembly types and the one BWR fuel bundle type. Approximately 2.2 MTHM of fuel will be produced daily by equipment whose utilization factor, or anticipated onstream time is assumed to be about 50% of the available time. Batch sizes of plutonium up to 7.0 MTHM (about 700 kilograms plutonium) will be supplied by the Conversion Facility (CF). Producing common fuel rods for group orders will be preferred to producing rods for an individual order in a series of discrete batches.

The feed materials used in the manufacturing of fuel pellets will be a master blend of 90% UO_2-10% PuO_2 powder mixture supplied by the CF and natural UO_2 powder purchased from a commercial supplier. PWR and BWR rod components, PWR skeleton assemblies, BWR fuel bundles with dummy rods in the mixed oxide rod positions, and natural UO_2 pellets of required sizes, will also be purchased from commercial suppliers. Storage for as much as four months supply of the small externally purchased hardware should be provided to protect against strikes. The master blend will be stored in a secured storage area in common with the CF.

All clean and dirty scrap will be sorted, packaged, and assayed for accountability within the FFF and then sent to the SRF for processing. All wastes (gloves, rags, broken tools, etc.) will be sent to the common waste handling facilities within the integrated LWR refabrication complex.

A safeguards and accountability system will be required to reduce the risk of diversion of special nuclear materials; such a system will affect the design of the FFF. The initial guidance on the safeguards system for the FFF has been issued.[16,17] Accountability guidelines are given in Appendix C of this report.

All other major facilities required for the FFF, such as medical and fire protection, can be shared within the integrated complex as permitted within licensing requirements.

3.1.1 Design Criteria

<u>Minimum Design Criteria</u>

The design of the FFF should comply with the following:

- General Design Criteria - Plutonium Facilities[18]

- Environmental Statement[19]
- Safeguards requirements [16,17,20,21]
- All Federal,[22] state, and local regulations

All operations, where master blend powder, $(U\text{-}Pu)O_2$ granules, $(U\text{-}Pu)O_2$ pellets, and $(U\text{-}Pu)O_2$ scrap are processed, should be in a hardened or Class I[23] building. Other operations not involving plutonium materials, such as the inspection of the cladding hardware and UO_2 powder, receiving and unloading may be performed in a nonhardened building to reduce costs. Operations involving encapsulated plutonium such as rod inspection after leak checking, and final assembly of mixed oxide rods into PWR and BWR bundles will require a building hardened for security reasons. This building will probably be required to meet requirements similar to Class I construction.

Versatility

Operation of $(U\text{-}Pu)O_2$ lines in the FFF will be on a batch basis to produce the pellets of various sizes and plutonium concentrations for the seven different assembly designs. The batch size should be as large as practicable to reduce downtime by reducing the number of cleanouts between batches. A maximum batch size of about 7.0 MTHM is the expected product of the CF.

Cleanout of process lines and equipment after completing one batch and before running others can be done several ways:

- Vacuum techniques can be used to physically clean the lines and equipment.
- The equipment can be run dry, and the new batch can be run in without any cleaning. This technique is the most desirable and may be possible at times if the compositional change from one batch to another is kept to a minimum within each line.
- The equipment can be run dry, the new batch added, and the initial product of the new batch sent to scrap.
- A combination of the above techniques may be used.

Sufficient data are not available to recommend one of the above techniques instead of the other. However, with the change to coprocessing and the use of a $(U\text{-}Pu)O_2$ mixture that will probably

be dissolvable in nitric acid, routing of the initial portion of a new batch to scrap may be the preferred method.

Output

Approximately 2.2 MTHM will be processed into LWR bundles, daily. Required production rates will be about 4 pellets/second, 1 rod/minute and about 0.5 bundle/hour.

Mechanization

The process equipment should be mechanized and remotely controlled as opposed to "hands on" glove box or manipulator operations. Auxiliary operations, such as sorting of the waste, could possibly be done manually in a glove box.

Maintenance

Easy and rapid repair of all equipment with low personnel exposure must be provided. Maintenance concepts may vary with specific design of equipment. Modular replacement, contact maintenance with gloves, remote maintenance with manipulators, and removal of equipment to a decontamination and repair shop are all acceptable concepts; adequate provisions shall be provided for each method. Shielding shall be provided between adjacent equipment within a line. Additionally, the capability to empty process vessels before maintenance should also be provided. (Alternative devices or discharge points may be required on a system to provide this capability). The ability to use portable shielding should be available.

Minimum Space within Contained Area

Instead of large cells, the space within containment should be kept to a minimum. An effort should be made to keep most of the working parts, which require high maintenance, outside of containment. Guidance on which working parts should be within and which parts should be outside of containment may be obtained from the advanced equipment design development ongoing at HEDL and from W.

Multiple Process Lines

In addition to some redundancy of equipment in a single process line, 4 to 6 process lines or combinations of process and spare lines

will be required. Several process lines will be needed to process batches with different plutonium concentrations, to produce pellets of different sizes, and to allow for downtime for maintenance and cleaning between batches. Transfer from one process line to another is also required on an emergency basis. Care is required to prevent mixing pellets of different compositions in a rod or mixing rods in bundles when products from multiple lines converge in rod or bundle assembly areas.

Separate Assembly Lines

Because of differences in the design and assembly of PWR assemblies and BWR bundles, separate bundle assembly lines will be required.

3.1.2 Support Facilities

Analytical Service Facility (ASF)

Closely coupled analytical support is required in the FFF to provide rapid analysis of feed materials, process streams, and fuel product. This facility should be selfsufficient with respect to performance of all analysis required to suport the FFF. The facility may be designed to meet the combined analytical requirements of other parts of the complex such as the CF. The ASF will require equipment and facilities necessary for the determination of concentration, composition, purity, and other chemical physical properties.

For process control, delay times in the range of 15 minutes for a go, no-go analysis are a desirable design goal, but in many cases, the analytical techniques for this high-speed analyses are still under development. A system which will provide for rapid transfer of samples to the analytical facility is required. A rabbit (vacuum) transfer system is one possible method for transferring these analytical samples.

A detailed description of requirements for an ASF to serve a typical MOX FFF has been developed by W as part of a design study to provide information on processes and facility requirements for the FFF.

Computer Facilities

Computers will be used in FFF in the following manner:

- For Nuclear Safety Control
- As an integral part of several process operations, such as

checking specifications on gaged pellets and rods and rejecting those that do not meet these specifications.

- For process control, such as determining when an unusual amount of material is outside of specifications and warning the operator of such deviations.

- For safeguards and accountability in a system such as "DYMAC"[20], which provides timely material balances to detect diversion of special nuclear materials.

- For inventory control, including quantity and location of material and equipment in the FFF.

Decontamination and Repair

Provisions must be made for maintenance and repair of equipment by remote manipulators and through gloves while in the process lines, providing cleanout can be achieved to obtain acceptable radiation levels. For major repair operations, spare equipment should be provided to replace process equipment in the lines. The failed equipment should be removed by cranes through specially designed passages between the facility floors into a decontamination facility. Hot repair shops will be required to perform repair maintenance if deemed economically feasible. A separate furnace maintenance area should be provided for large repair operations such as rebricking. Equipment which can not be repaired is decontaminated and removed to the solid waste facility for disposal.

Adequate provisions should be made for spare parts inventory and spare equipment.

3.2 Major Process Operations

The major process operations which will be performed in the FFF are discussed in detail in the form of process flow diagrams and systems narrative descriptions provided by W under contract EY-77-C-09-0945.[24,25] This information is based upon the earlier studies W conducted for their own Recycle Fuel Plant. Information on equipment and processes provided in the deliverables of this contract is considered basic data for the venture guidance appraisal.

A brief discussion of major process operations follows:

Master Blend Receipt

The master blend is moved from secured storage into the FFF.

Blending

The master blend of 10 wt % PuO_2 and 90 wt % UO_2 is mixed with natural UO_2 to achieve homogeneity of composition and ceramic properties.

Milling

The blended powders are hammer milled to break up agglomerates.

Powder Preparation

Three steps are required to prepare the blended powders for feed for the high-speed pellet press.

- Compact Powder - Powder is pressed cold to form large compacts.
- Granulate and Size - The powder compact is broken and screened to the desired size range.
- Add Lubricant - A lubricant is added to the material to reduce friction in the pelletizing operation.

Press Pellets

Green pellets of the desired dimensions and weight and 50 to 60% of theoretical denisty are formed.

Sintered Pellets

Pellets are fixed to the desired density of about 95% of theoretical density.

GRIND PELLETS

The pellets are ground to the desired diameters.

Inspect Pellets

The pellets are gaged to determine dimensions, weight, and surface characteristics.

Measure Pellet Stack

Pellets are loaded into trays with multiple troughs, and the stacks are measured to insure proper fuel length.

Encapsulation

This involves a series of operations: 1) Moisture is removed from pellets and rods separately before loading; 2) the pellets are remotely loaded into the rod; 3) the end of the rod is decontaminated; 4) the spring and end cap are placed into the rod; 5) the end cap is welded to the rod; and 6) the rod is filled with helium.

Rod Inspection

Inspection techniques include leak-checking, well radiography, fissile assay, and visual and dimensional inspection.

Bundle Assembly

Finished $(U\text{-}Pu)O_2$ rods are inserted into preassembled BWR bundles and PWR skeleton assemblies.

Process Scrap and Waste

In addition to the normal process operations, facilities will be required to process $(U\text{-}Pu)O_2$ scrap and reject rods and waste. The $(U\text{-}Pu)O_2$ scrap will be collected as generated on the individual process lines and shipped to the SRF. Clean scrap will be packaged separately from dirty scrap. Reject rods will be opened in the FFF to recover pellets. Contaminated reject cladding will be treated as waste. Waste will be sorted, packaged, and analyzed for $(U\text{-}Pu)O_2$ before sending to SRF or to the appropriate waste facility.

3.3 Layout of Facility

A multi-line concept has been chosen as the basis for the facility layout. Each line is independent of the other lines and is capable of processing either BWR or PWR fuel through the rod loading process. A full compliment of process equipment is provided in each line because of the strict accountability requirements, even though the individual utilization on a given piece of equipment within the line may be low. Only one composition of fuel is processed in a given line at any one time.

Early studies by HEDL on the separate stream processing case suggested a layout of four process lines and one smaller process line for sintering tests and small batches. Sintering tests are required between different enrichments and between each master blend of MOX powder and natural uranium diluent. The total number of pilot runs per year for the eighty-nine enrichments required will justify the dedication of one line — at least through the sintering process — for these tests.

Based upon material balance studies by SRL and W, a six line concept is recommended and is shown in Figure 1. Four of these lines would be required to sustain production and would include all operations from enrichment blending to rod loading, with crossovers for flexibility. The other two lines, designated as a pilot unit and a spare unit, would include all operations with the exception of MOX storage (after enrichment blending) and sintering capacity (one furnace instead of four). All lines would be identical, thereby facilitating-operator training and maintenance and minimizing inventory of replacement parts. Each line would be capable of processing any of the fuel designs.

W has conducted computer studies by using the "GALS" program (Generalized Assembly Line Simulator). This program simulated a main line of flow along a typical production line with the equipment and internal storage stations being represented by equipment work times, variations in work times, reject rate, and frequency and duration of downtimes. Results of these computer studies indicate that about 206 kilograms MO_2 fuel can be produced per shift of operation. Further studies with a more detailed simulation with the "SIMULA" computer program confirmed the same general results that a six line concept should be adequate for processing 100 kilograms of plutonium per day or somewhat more than 700 MT of mixed oxide fuel per year.

There are many considerations for individual equipment layout within a given production line; some of these include the following:

- Provisions to transfer materials between process lines is required, but this transfer of materials must be carefully controlled.

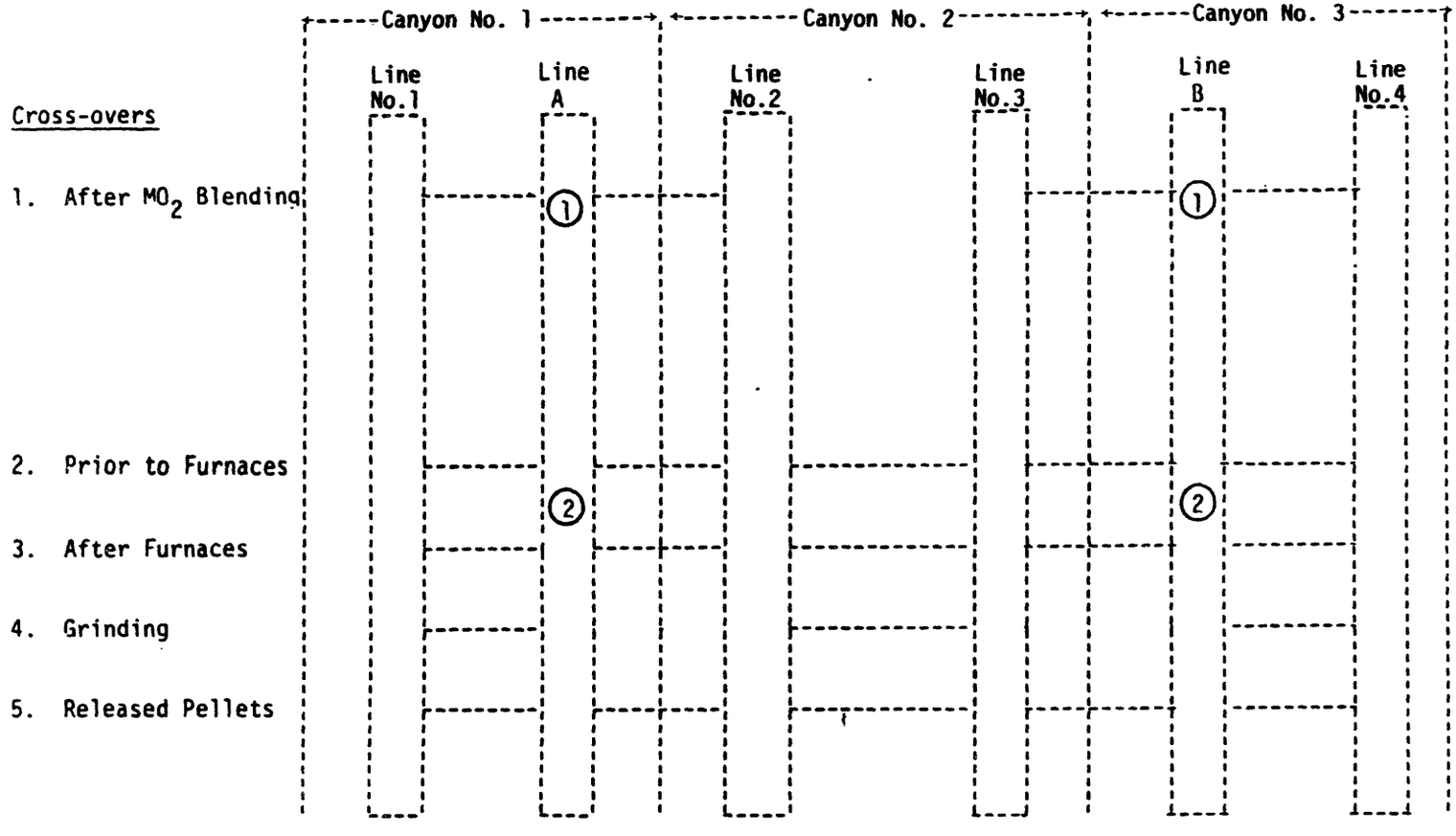

Lines A and B (Spare and Pilot) ---------- (1) No Blended MO_2 Storage

(2) Only 1 Furnace

FIGURE 1. Plant Layout, Six-Line Concept

- The transfer distance between equipment should be kept to a minimum unless convenient and economical process storage can be achieved.

- Ease of maintenance of equipment should be a primary consideration to reduce downtime and radiation exposure to maintenance personnel.

- Criticality events must be preculded.

- Shielding requirements must be satisfied.

- Security and Safeguards requirements must be satisfied.

- Health and Safety requirements, such as fire, ventilation, etc., must be satisfied.

- Powders and granules should be transferred by gravity flow or mechanical transport techniques whenever possible.

Westinghouse (W) has developed detailed layouts and manufacturing arrangements for a six-line fuel fabrication facility as a part of the information supplied for the coprocessing case under contract EY-77-C-09-0945.[24,25] This information was based upon the design of the W Recycle Fuel Plant which was to be a two-line facility consisting of one production line and one spare line. The design proposed by W for the FFF is a three-level building, including a basement. The primary processing equipment for each production line is in one of two-stack arrangements, the blending complex or the pellet compaction complex. Each of these arrangements is isolated by processing cells connecting the first and second levels. W recommends two adjacent lines in each of three canyons. Mechanical conveyors are between the lines along with shuttle cars for transporting pellets to and from the sintering furnaces, the storage and rod loading areas. Crossovers connect the production and spare lines at several locations.

Within the blending complex are the mixed-oxide master blend feed hoppers, weigh hoppers, and the UO_2 feed hoppers and weigh hoppers. These feed into an enrichment blender capable of processing 225 kilograms of mixed oxide powder. Gravity feed is used in this stack arrangement for transfer of the powder into the enrichment blender. Once the powder is blended, the W concept calls for transfer of $(U\text{-}Pu)O_2$ by vacuum transfer backup to the upper level to one of nine 225 kilogram MOX storage silos per line. From the MOX storage silos, the $(U\text{-}Pu)O_2$ powder is conveyed by gravity down into the pelletizing complex where the compaction, granulation, and pelletizing equipment is located in a stack arrangement. Both the pelletizing and blending complexes are designed to facilitate maintenance by location of equipment close to the barrier walls where swing-away shielding and gloveports

are provided. Equipment will be designed primarily for remote maintenance, but individual pieces can be lifted to the upper level and then lowered through a tunnel back down into the basement area for repair in a hot-cell repair area.

Sintering furnaces are on the first level and are not isolated between canyons. There will be four furnaces per production line with two complete spares. The furnaces will be modular in design. A given module can be lowered from the first level into the basement where the furnace maintenance area is located. The W design incorporates inprocess storage on the conveyor system before and after the sintering furnaces.

The grinding and final pellet inspection areas are on the first level, and acceptable pellets are stored in a pellet tray in the dry storage area at one end of the process line, adjacent to the rod loading area. There will be one rod loading complex per production line where the individual tasks will be carried out in a process cell which provides for primary containment of the plutonium.

Once the fuel pellets are encapsulated in the Zircaloy cladding, the fuel rods are leak tested and moved to the rod inspection area on the first level. There are three rod inspection areas for the six line facility. After inspection, the rods are sent to a rod storage area which serves separate BWR and PWR bundle assembly and inspection areas also on the first level.

The basement area of the W layout is divided between the furnace maintenance area, three hot-cell repair shops, equipment storage and service area, fan and final HEPA filter room, and miscellaneous waste treatment and liquid effluent treatment areas.

The W layout represents an efficient method for arrangement of the manufacturing areas. Primary containment of plutonium is provided by the individual process equipment. A three-zone ventilation control concept is used in conjuction with the radiation shielding. Surrounding the main process equipment is a restricted access area (RAA) where the radiation dose rate is designed for 100 mrem/hr. Outside of the RAA is a limited access area (LAA) which is designed for a maximum dose rate of 2.5 mrem/hr when the shielded glove ports and window openings are closed. This area can be used for scheduled maintenance. The third ventilation zone is designated the normal access area (NAA) and is designed for 0.25 mrem/hr.

The W concept makes extensive use of the vacuum transport means of moving the powders, both unblended and blended, throughout the plant. This method for transport of $(U\text{-}Pu)O_2$ mixed oxide powder has not been proved. Because of differences in the powder particle size, segregation of the powders may occur. In addition, the

transport lines could be plugged. The amount of powder holdup in the lines and valves is unknown, which could cause severe accountability problems. Extensive testing of the vacuum transport of $(U\text{-}Pu)O_2$ powders is required before this method can be deemed acceptable. The alternative approach is to transfer powder by using discrete containers and mechanical conveyors. A combination approach of gravity feed and mechanical transport may be the most desirable method for powder transfer.

3.4 Auxiliary Services

Many services to the main process operation are required for fabricating LWR fuel assemblies. These services can be divided into five areas: process, safety, personnel, security, and safeguards. Some of these services, such as security, will be shared within the integrated reprocessing complex. Additional information about these areas follows:

3.4.1 Process

Filter Banks, Sand Filter and Stack

All air from process cells and the contained contaminated process areas should undergo triple HEPA filtration or double HEPA filtration and then pass through a sand filter before being exhausted through the stack. The initial HEPA filter should be at the air exit from the process cell, but separate filter banks should be provided for the last two HEPA filters.

Exhaust Fans

Air is exhausted from both the process cabinets and rooms of the FFF to meet process specifications, for personnel comfort, and to provide the required pressure differential between areas of differing contamination potential.

Water Chillers

Chilled water will be required for various process equipment, such as the hydraulic pump on the cold press.

Cooling Towers

Cooling water is required to remove heat from various areas, such as the sintering furnace.

Process Gas and Air Supply

The atmosphere in the process cells will be dry air. The atmosphere in the sintering furnace will be 6% H_2-N_2 with a controlled dew point. Argon and helium will be required for welding and rod pressurization.

Shipping and Receiving Facilities

Materials will enter and leave the FFF by truck. Docks and equipment for loading/unloading trailers are required. Design of these facilities must comply with safeguards regulations.

Mockup Facility

A cold area is required where all modified or replacement equipment can be checked out before installation in a contaminated line.

Maintenance Personnel

Space and equipment are needed for the following maintenance personnel: Electrical and instrumentation mechanics, maintenance mechanics, and machinist. The shop areas for maintenance should also include a pipe shop with a valve test stand.

Freight Elevators

Elevators may be required for moving equipment between floors.

Personnel

Auxiliary services for operating personnel are common throughout the integrated complex. Details about the individual services will be provided by the SRP Task Force.

Safety

Facilities must be provided to protect operating personnel, process equipment, and the building integrity at all times. These facilities can be divided into four main areas: radiation control, fire protection, leak monitoring, and first aid. Emergency power must be provided for the alarms and emergency response parts of these systems.

Radiation Control

Around-the-clock health physics (HP) protection is required. This protection includes HP personnel, criticality monitors, constant air monitors, personnel monitors, decontamination facilities, and an emergency breathing air system.

Fire Protection

Protection must include: detectors which automatically activate alarms, Halon systems in process cabinets, and Halon or water sprinklers in the building. If a water sprinkling system is used, it must be designed to keep water away from fissile materials to avoid a criticality incident.

Water Leakage

Water leaks are serious hazards as they can lead to loss of containment and possibly to a criticality event. Water alarms are required in all process cells, operating area, maintenance areas, and storage areas where the possibility of a leak could occur.

First Aid

Facilities for first aid include emergency equipment stations and areas for medical personnel.

Security

The FFF must be designed to accommodate normal security systems. These systems are described in more detail in Reference 16.

Fences

The fences around the FFF would also have some type of surveillance system, such as manned patrol, alarms, or remote cameras.

Patrolmen

Personnel would be onduty 24 hours to handle routine

operations. Additional personnel would be available to respond to emergency situations.

Communications

Special security communication systems are required.

Vehicles

Cars are required to transport security personnel during normal operations. Armored vehicles are required to respond to emergency situations.

Weapons

Patrolmen and security forces must be equipped with weapons to respond to emergency situations.

Safeguards and Accountability

Safeguard requirements include architectural and process control systems. A preliminary assessment of the architectural and process requirements has been made.[17] The process controls will involve a timely accountability system such as the DYMAC system proposed by LASL.[20] Accountability guidelines are given in Appendix C of this report.

4. PROCESS DESCRIPTION

The reference process flowsheet for fabricating LWR fuel bundles in the FFF is shown in Figure 2. Even though alternative flowsheets could be used to produce an acceptable product, a specific flowsheet is needed to serve as a basis for the conceptual design of the FFF. This flowsheet features the blending of a master mix powder of 90 wt % UO_2 and 10 wt % PuO_2 with natural UO_2 powder, cold pressing and sintering of pellets, grinding of the pellet diameter to size, encapsulation in the desired cladding, and final bundle assembly.

The major process steps of this flowsheet (Figure 2) are the same as those of the flowsheet in the preliminary TDS for the separated case.[14] Powders are still blended, but a coprocessed master blend has replaced the PuO_2 powder feed. After the powders are blended, no change occurs in the manner in which LWR fuel assemblies are produced in the FFF.

A significant change in the method of handling clean $(U\text{-}Pu)O_2$ scrap has evolved because of the change to a coprocessed master blend. Previously, the clean scrap was to be recycled dry within the FFF by crushing, heating to oxidize and reduce, and then reblending. In the coprocessing case, the clean and dirty scrap will be collected from the individual lines and will be assayed for accountability. The clean and dirty scrap will be segregated and packaged into separate containers and shipped to SRF located within the complex. The SRF will be designed to handle all clean scrap; however, clean scrap which is only slightly out of enrichment (<10%) may be recycled back into the enrichment blender.

Several changes or clarifications about BWR process requirements have occurred since the issue of the preliminary report on the separate stream case; these include:

- The possible maximum concentration of total PuO_2 in BWR fuel pellets is increased to 10 wt % compared with 6 wt % for PWR pellets.
- BWR tubing will be purchased in the autoclaved condition.
- BWR bundles which have been assembled and aligned in a commercial UO_2 fuel fabrication plant with dummy rods in the $(U\text{-}Pu)O_2$ rod positions will be purchased. These BWR bundles will then be transferred to the FFF where the dummy rods will be removed and the $(U\text{-}Pu)O_2$ rods inserted.

Details of the process given in Figure 2 are expanded in the narrative systems description and process flowsheets for the various process areas given in the data bases provided by Westinghouse.[24,25]

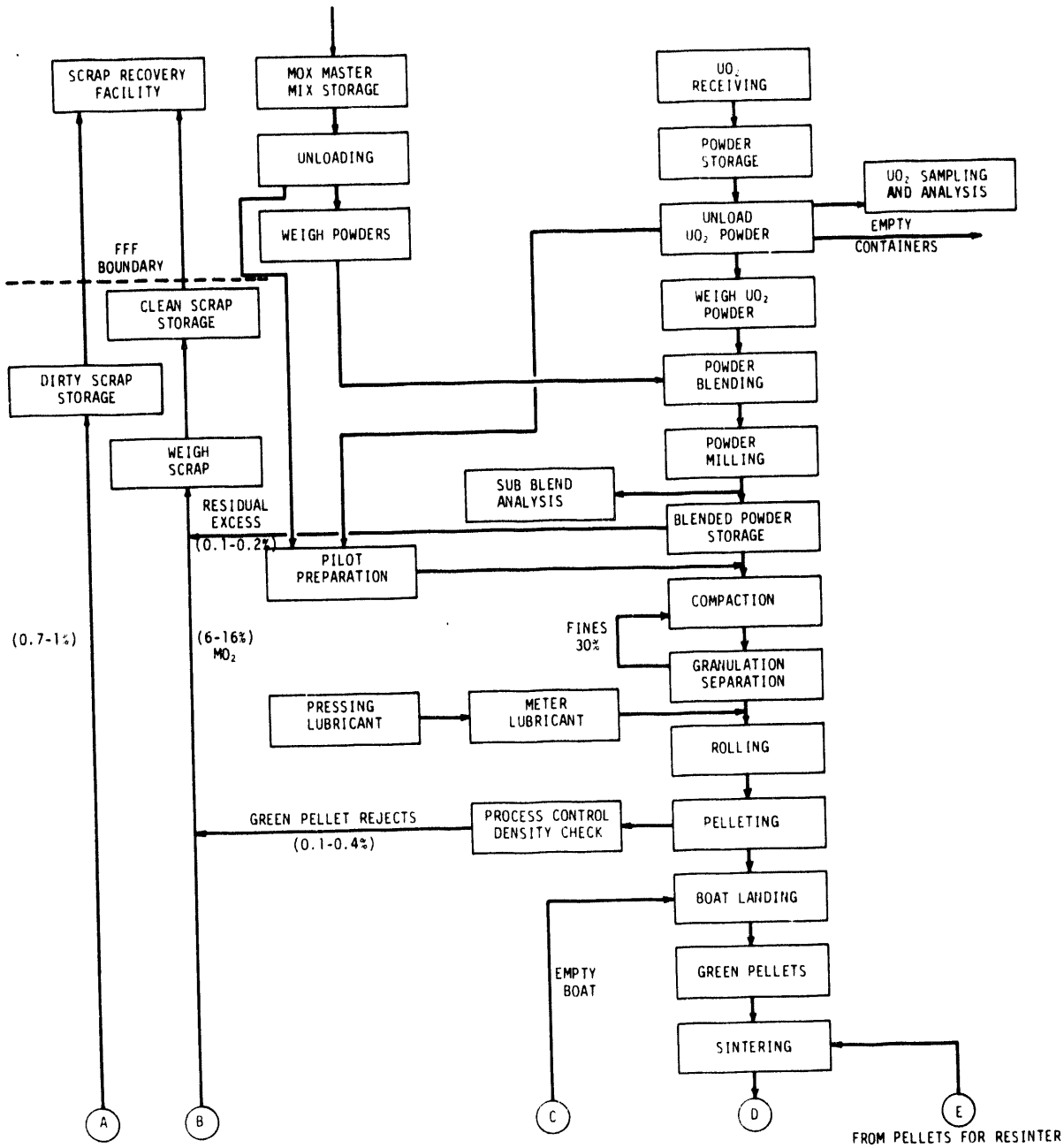

FIGURE 2. Mixed Oxide Fuel and Fuel Assemblies Process Flowsheet

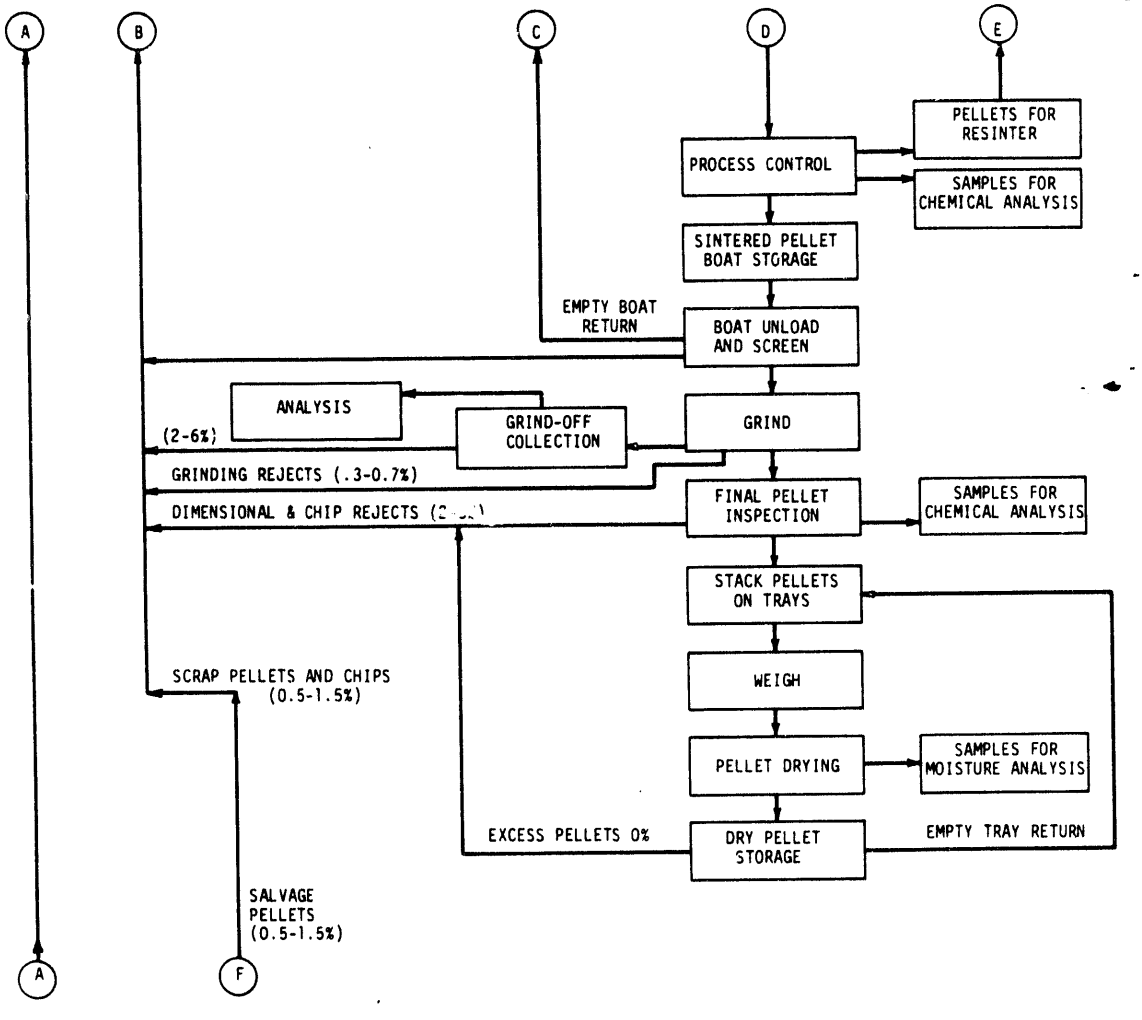

FIGURE 2, cont'd

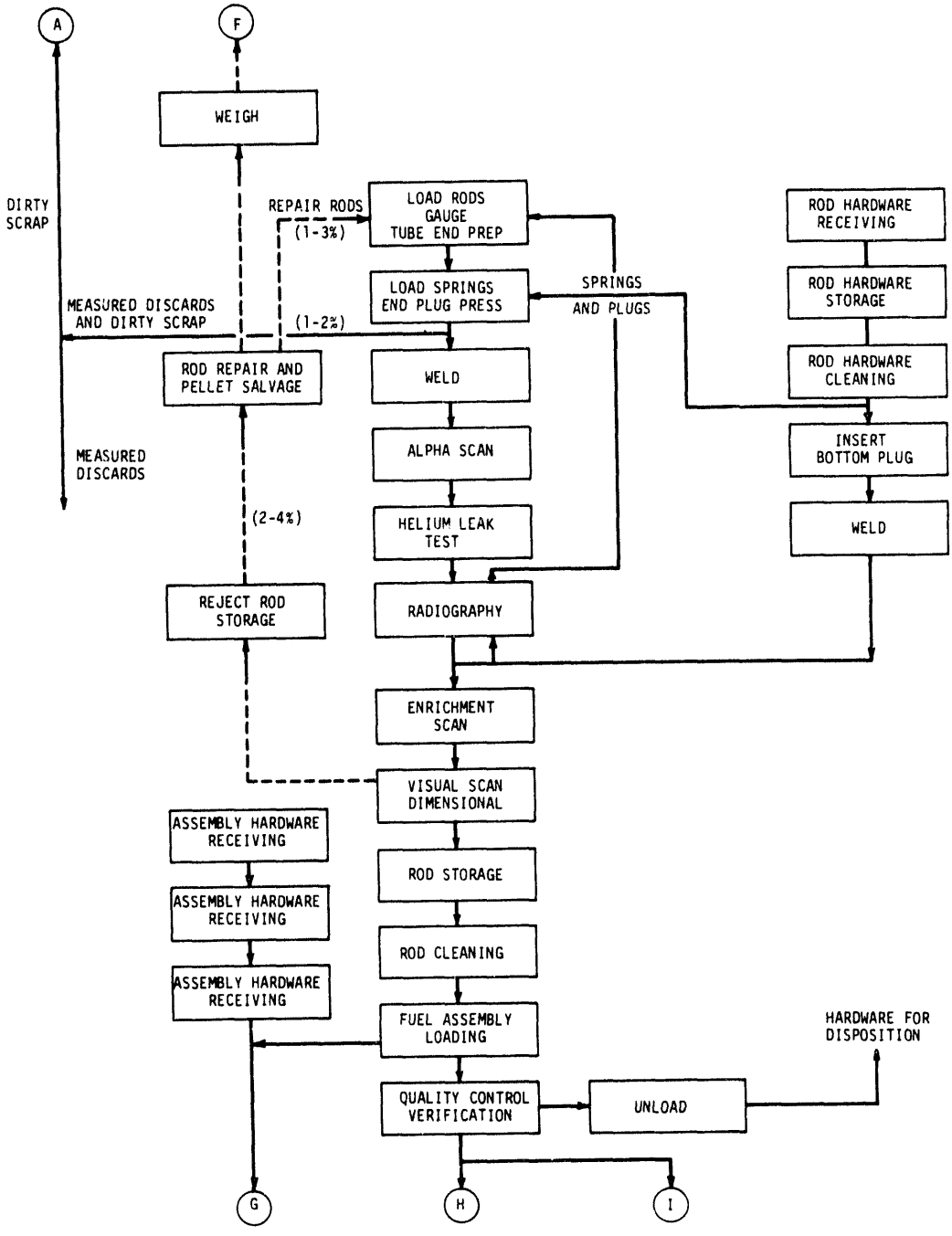

FIGURE 2, cont'd

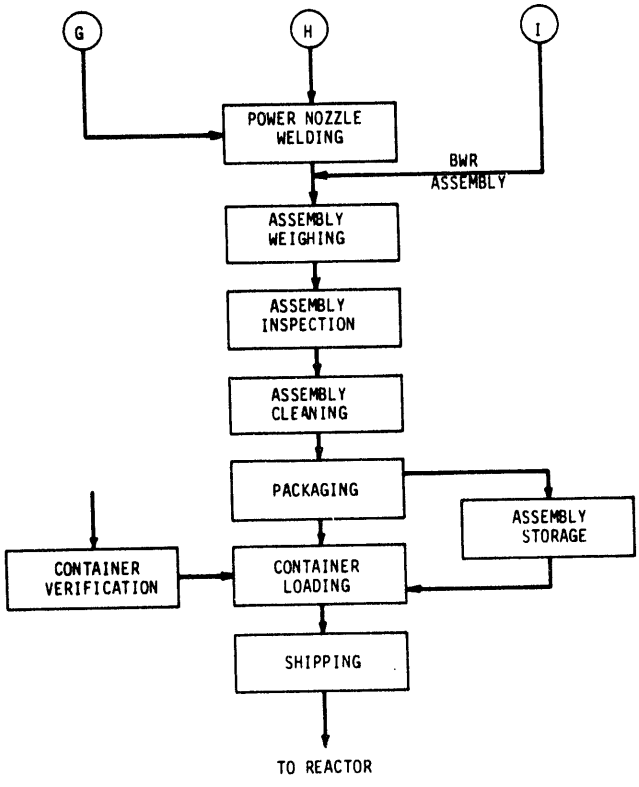

FIGURE 2, cont'd

4.1 Process Streams and Material Balance

4.1.1 Process Streams

The major process streams in the FFF are identified in Figure 3 and the composition of these streams and flow rate/day are shown in Table 8. The major feed streams (1 through 4) are $(U\text{-}Pu)O_2$ master blend, natural UO_2 powder, BWR rod components, and assembled BWR bundles with dummy rods in the $(U\text{-}Pu)O_2$ rod positions, and PWR rod and bundle components. The product streams (9 through 10) are BWR and PWR bundles; daily output would be 2.2 MTHM with an average daily plutonium output of 100 kilograms. Gas streams (5 through 7) from the FFF include the building ventilation, ventilation from the $(U\text{-}Pu)O_2$ lines, and sintering furnace off-gas. A liquid stream (8) will occur periodically as the component and bundle wash solutions are changed. Solid waste (11) is estimated to be three 55-gallon drums for each MT of fuel processed.[7] $(U\text{-}Pu)O_2$ scrap (12 and 13) are the other two major process streams.

4.1.2 Heavy Metal Material Balance

A simplified heavy metal material balance for the FFF (Table 9) was developed according to the following assumptions:

- The average plutonium concentration will be 5.0 wt % in BWR fuel and 4.5 wt % in PWR fuel.

- The plutonium in the product of the FFF will be apportioned 1/3 for BWRs and 2/3 for PWRs.

- The FFF will be sized for an output of 2.2 MTHM per day according to an average output of 100 kilograms of plutonium. Although the heavy metal output of the FFF should be nearly constant at 2.2 MT, the daily output of plutonium may vary, depending upon the plutonium concentration in the specific fuel being produced. For low (<5.0% for BWR and <4.5% for PWR) plutonium concentrations, the plutonium output of the FFF will be <100 kilograms per day. Likewise, for high (>5.0% for BWR and >4.5% for PWR) plutonium concentrations, the plutonium output of the FFF will be >100 kilograms per day.

- The feed material, when processed, will yield 84.5% products with 14% dissolvable clean scrap, 1% dissolvable dirty scrap, and 0.5% measured discards.

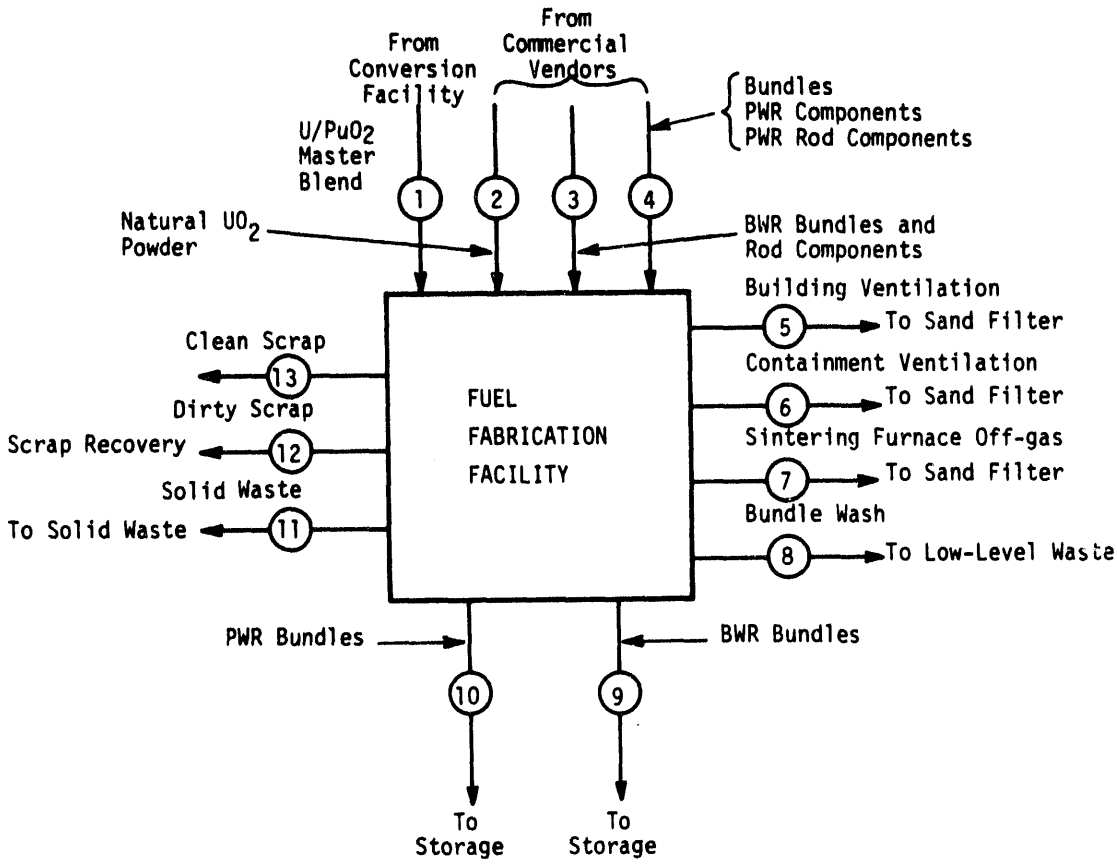

FIGURE 3. Process Streams in the FFF

TABLE 8

Average Daily Quantities for FFF Process Streams

Process Stream	*Description*	*Composition*	*Flow Rate/Day*
1	Master Blend	90% UO_2-10% PuO_2	1183.4 kg HM
2	Natural UO_2 Powder	UO_2	1358.9 kg U
3A	BWR Rod Components	Zircaloy-2	265
3B	BWR Bundles	Wt % $(U\text{-}Pu)O_2$	12
4A	PWR Rod Components	Zircaloy-4	580
4B	PWR Bundle Components	Zircaloy-4	3
5	Building Ventilation	Air	TBD[a]
6	Containment Ventilation	Air	TBD
7	Dissolver Off-Gas	Air	TBD
8	Bundle and Component Wash	H_2O	TBD
9	BWR Bundles		12, 666 kg HM
10	PWR Bundles		3, 1482 kg HM
11	Solid Waste	Gloves, Trash, etc.	7 55-gal drums, $\leq$12.7 kg HM

a. To be determined.

TABLE 9

Average Daily Heavy Metal Material Balance for BWR and PWR Production

	BWR,[a] *kg*	*PWR,*[a] *kg*	*Total, kg*
Product			
Pu	33.3	66.7	100
U	632.7	1415.5	2048.2
HM	666.0	1482.2	2148.2
Feed			
HM	788.2	1754.1	2542.3
Pu	39.4	78.9	118.3
Master Mix	394.1	789.3	1183.4
Natural U	394.1	964.8	1358.9
Recoverable Scrap, 15%			
Pu	5.9	11.8	17.7
U	112.3	251.3	393.6
Total	118.2	263.1	381.3
Clean Scrap, 14%			
Pu	5.5	11.1	15.6
U	104.8	234.6	339.3
Total	110.3	245.6	355.9
Dirty Scrap, 1%			
Pu	0.4	0.8	1.2
U	7.5	16.7	24.2
Total	7.9	17.5	25.4
Loss in Waste, 0.5%			
Pu	0.2	0.4	0.6
U	3.7	8.4	12.1
Total	3.9	8.8	12.7

a. Average BWR Pu concentration = 5%; average PWR Pu concentration = 4.5%.

As shown in Table 9, the daily output of the FFF will be about 2.2 MTHM (2148.2 kilograms HM). At the average plutonium concentrations of 5.0% for BWRs and 4.5% for PWRs, the daily output of fuel bundles would average 100 kilograms of plutonium. The feed requirements for this output will total about 2.5 MTHM (2542.3 kilograms) and will consist of 1183.4 kilograms HM (118.3 kilograms of plutonium) of a master blend and 1358.9 kilograms of U as UO_2. Approximately 381 kilograms HM of recoverable scrap will be produced daily. The dissolution of the dirty scrap will be separate from the clean scrap. Finally, 12.7 kilograms HM will be distributed in process and eventually removed from the FFF in solid waste, such as gloves, trash, defective equipment, cleaning materials, etc.

4.1.3 Detailed Material Balance[26]

A detailed material balance for the separated PuO_2 case was calculated with the aid of an SRL computer program. The results of these calculations can generally be applied to the coprocessing case as the process operations are almost identical for both cases after the powder is blended. Differences between the two cases occur only in the head end powder operations and the method of scrap recycle. In the coprocessing case, the PuO_2 stream is replaced with the master mix (10% PuO_2-90% UO_2); and the dry scrap recycle stream is eliminated.

Material balances were calculated for three cases:

- The entire facility without division into separate production lines.
- One PWR pellet and one BWR pellet line if the facility consists of four lines of equal capacity which produce all PWR pellets and two lines of equal capacity which produce all BWR pellets. This plan is recommended by W.
- One pellet line and one rod line if the facility consists of four lines of equal capacity which produce pellets of all types and two lines of equal capacity which produce rods of all types. This plan is presently recommended by SRL.

Results of these three cases are summarized in Table 10. Four pellet lines are recommended to meet production requirements according to the production plan, other assumptions are stated below. Two additional spare lines are recomnended for backup in case major maintenance is required. These six pellet lines would be of equal capacity and would be capable of producing both PWR and BWR pellets.

TABLE 10

Production Rate Requirements, 1986

	No. of Process Lines		
	1 Line	*6 Lines*	*4 Lines*
Blending, MT/shift	1.7	0.3	0.4
Pressing, pellets/sec	8.0	1.5/1.1	2.0
Sintering, pellets/sec	6.1	1.1/0.9	1.5
Rods, min.	1.4	0.3/0.2	0.7
Bundles (PWR/BWR), hour	1.00	0.3/0.7	0.3/0.7

Input data required for the material balance calculations and assumptions used for the three specific cases include:

Product mix

The FFF will produce seven $(U\text{-}Pu)O_2$ fuel assembly designs as described in the W market survey for 1986. Details of these seven assembly designs were described in Section 2.

Block flow diagram and fraction of material to recycle and scrap stream

This information was provided in the supplemental data package for the separate plutonium case.[26]

Equipment utilization factors

Generally, these factors were assigned at 50%; a few equipment items were assigned a factor of 60 or 70%. Specific information on these factors were provided in the supplemental data package for the separated plutonium case.[26]

Production plan

The FFF produces $(U\text{-}Pu)O_2$ assemblies for 58 PWR and 27 BWR reload orders. A total of 89 different enrichments (fissile contents) will be required — 60 enrichments for PWR and 29 for BWR. Each PWR reload order will require two standard enrichments and one variable enrichment for a total of 60. Each BWR reload order will require two standard enrichments and one variable enrichment for a total of 29.

Batch size

The CF will supply a batch of master blend with constant isotopic composition to permit a single pellet line in the FFF to be operated for one week.

Clean out

Approximately four shifts will be required to clean out a pellet line between processing of $(U\text{-}Pu)O_2$ batches with different fissile contents.

Runout

Only one shift downtime is required to run the equipment dry if the succeeding batch has the same equivalent fissile content, even if the isotopic composition is different.

Tooling change

One-half of a shift downtime will be required for tooling changes (i.e., pellet press) for each order.

Inventory

Six shifts downtime are required every two months maximum for clean out and inventory.

Plant operation

The FFF will be operated 365 days per year, three shifts a day.

Maximum permitted downtime

900 shifts of operation will be needed to meet production requirements. Therefore, downtime for cleanout, runout, or tooling changes cannot exceed 195 shifts per line.

4.2 Master Blend Preparation

The FFF will be closely coupled to the CF and will probably be operated by the same management. The physical interface between these two facilities will be a common secured storage area. Containers with the master blend (90% UO_2-10% PuO_2) will be placed in this storage area from the CF. The capacity of these containers as specified in Reference 30 for coprocessing will be 38 kilograms.

A complete chemical isotopic analysis will be available on each batch. Several canisters will have the same isotopic composition, because blend tanks which feed the CF will be designed for a batch size of up to 7.0 MTHM.

Retrieval From Secured Storage

The canisters containing the powder are retrieved from storage. The exterior surface of the canister is vacuum cleaned and dry wiped.

Positive identification of the specific canister is made in the FFF. The canister is weighed and assayed by a nondestructive analysis-neutron technique to determine the plutonium isotopic content. The powder is then given a batch identification for processing in the FFF and is then transferred to the master blend weigh hopper area.

The canister is opened, and the powder is dumped quantitatively into the weighing and batching hopper. The empty cans are weighed for tare, verified empty by NDA, and then returned to the CF for reuse.

4.3 UO_2 Preparation

4.3.1 Receive

The UO_2 powder will be purchased from the vendor to specification in ready-to-use condition. Specifications for UO_2 powder are provided in Section 2.

The UO_2 powder will be received in 55-gallon drums or larger containers. Analytical samples will be required to determine O/M ratio, moisture content, and cationic impurities. The O/M ratio and moisture content are needed to determine the weight of UO_2 required for batching purposes. A spectrographic analysis of the UO_2 powder is required to confirm that the powder meets specifications.

4.3.2 Screen

After obtaining an analytical sample, the UO_2 powder is sieved through a 14-mesh sieve to remove "tramp" material and transferred to the batching hopper.

4.4 Cladding Preparation

No shielding or containment facilities will be required for the cladding preparation because no radioactive materials are involved in these operations.

4.4.1 Receiving and Inspection of Cladding, Springs, and End Plugs

Cladding, springs, and end plugs are received in shipping boxes and are visually inspected for gross defects and shipping damage. Random samples are taken for spot checks to ensure that all hardware meets compositional and dimensional specifications. A 100% inspection of hardware is performed at the vendor's shop, and only a statistical inspection will be required at the FFF to check on the vendor's quality control. After inspection, the material is put into degreasing solutions or an ultrasonic chamber for cleaning. After cleaning, all components will be handled with lent-free white gloves to maintain cleanliness. Components are stored until needed.

BWR cladding rods will be bought already autoclaved and inspected by the supplier.

4.4.2 Bottom End Cap Welding

The bottom end cap is inserted into the cladding and welded. Welding rates will be in the range of one to two a minute; therefore, the welding method should be fast and reliable. TIG welding is presently the preferred method. In the future, magnetic impulse welding, now under development at Hanford Engineering Development Laboratory, may also meet these requirements. After welding, components are sent to the weld inspection station.

4.4.3 Weld Inspection

All components receive a radiographic weld inspection. In addition, a ring gage is used to check for weld buildup.

4.5 Pellet Fabrication

4.5.1 Batching and Blending of Master Blend and UO_2

Prior to batching and blending, sintering tests or "pilots" are run on new batches of feed powder to determine the ceramic properties of the blend. Powder samples totaling about 10 kilograms are removed from the master blend and UO_2 storage hoppers. These powders are blended, compacted, granulated, pressed, and sintered. All of these process steps except blending should be done on the production equipment.

The sintering characteristics and subsequent pellet properties can be influenced by varying the process conditions during pellet pressing and sintering. It is much easier to determine the properties and sintering parameters for each new batch of feed powders than to recycle an entire batch of blended powder or reject pellets. The remainder of the powder is held in the storage hoppers until the results of the pilot tests are known (up to 24 hours). Design of the FFF should include sufficient storage to permit pilots to be run on each new batch of feed powder.

After the pilot tests are successfully completed, the master blend powder and natural UO_2 powder are transferred from storage tanks to weigh hoppers to determine proper blend composition. The powders are then transferred to a large slab blender for blending. Homogeneity is verified by analysis of samples sent to the ASF.

4.5.2 Milling

After blending, the powder is hammer milled to break up large agglomerates. Analytical samples will be removed after hammer milling to determine various characteristics, including blend uniformity and fissile content. All of these analyses will be run in the ASF.

4.5.3 Compact Powder

The blended powder is removed from storage, transferred to an automatic press, and formed into large compacts at pressures between 10,000 to 20,000 psi. The compact size is not critical and can be the same for all fuels, but the ℓ to d ratio should not exceed 1/4. A good design basis would be to press a compact with a 2-1/2-inch diameter and a 1/2-inch thickness. The green density of the compacts will be between 40 and 50% of theoretical

density. No binder or lubricant is added to the powder, but the die is lubricated before each compaction. A roll compactor may be used to make the green compacts.

The compacts may be fractured or laminated when removed from the die. However, these compacts are acceptable because the next process step is granulation.

4.5.4 Granulate and Size

The compact is granulated to a size acceptable to feed a high speed, automatic press. The acceptable size range is generally between -20 and +60 mesh size. Undersized granules (-60 mesh) may be returned to the main process stream at the compaction operation. Oversized granules (+20 mesh) are returned to the granulator. A powder density check is made periodically after granulation to check consistency of compaction and granulation.

The granules of the desired size are then blended with a dry lubricant. Generally, 0.3 to 0.5 wt % sterotex is used. The blending should be for a short period of time (5 to 15 minutes) and not be violent because the granules do not have high strength. After the lubricant is added, the mixture may be placed into buffer storage or sent to the pellet presses.

4.5.5 Press Pellets

The granule mixture is pressed at 20,000 to 60,000 psi into pellets of the desired dimensions with an automatic, high speed (rotary or multicavity) press. All pellets of a given batch will have the same diameter and will be pressed at the same pressure; however, diameter and pressure may change for subsequent batches. The charge to the die cavity is controlled by filling to constant volume (weighing the charge will not be necessary).

The desired product of this operation is an integral pellet of the correct "green" density. A statistical sample of a few pellets should be made to confirm that pellet weight and density are in the desired range. The green density is 50 to 60% of theoretical density.

The pellets are loaded into molybdenum boats through a boat loading device such as a vacuum pickup and moved on conveyors to the sintering furnace. A standard boat will contain 15 to 16 kilograms of MOX pellets.

4.5.6 Sintering

The initial heating of the pellets should be done at low temperatures to remove any volatiles that may be present. Temperatures of about 500°C for 1 to 2 hours will be sufficient to fulfill this requirement. Heating of this initial zone of the furnace to low temperature may not be required because the hot exhaust gases from a countercurrent gas flow sintering furnace may be acceptable.

The pellets are then sintered to high density (about 95%) at 1700°C for 8 to 13 hours. The furnace atmosphere will be 6% H_2/N_2. The pellets are then cooled and unloaded from the boats. A statistical sample of pellets will be made to determine that the proper density was obtained. Pellets with a low density may be returned to the sintering furnace; pellets with a density that is too high are sent to scrap recycle. Pellets with an acceptable density are transferred to the grinder.

4.5.7 Grinding

The pellets are ground by a centerless grinding technique to the desired diameter. This grinding can be done either dry or wet (H_2O) although dry grinding is the preferred and recommended method for the FFF. Provisions must be available to collect the dust from grinding. The pellet dust is packaged and sent to SRF for reclamation. Next, pellets are transferred in boats to the inspection station.

4.5.8 Pellet Inspection

Ground pellets are loaded into a feed hopper which automatically aligns the pellets for inspection. Although a 100% inspection of all pellet attributes may not be necessary, the design of the FFF should provide this capability. Pellets will be automatically inspected for proper weight, diameter, length, and surface quality. This step is closely controlled through computer operations. After the inspection is completed, the pellets are remotely loaded into trays and put into a dry pellet tray storage vault.

4.6 Encapsulation

4.6.1 Form Pellet Stack

Trays of pellets of the desired enrichment and physical characteristics are recalled from storage. The pellet stack is

formed in a horizontal trough or series of troughs to the required length and weight. The total stack length is typically 144 inches, and the weight is about 3000 grams. If the initial pellet stack does not meet specification, adjustment can be made by replacing a pellet or several pellets with new pellets.

4.6.2 Rod Loading

When the correct pellet stack length has been verified, rod loading operations begin. Cladding and rod components are removed from storage and are available at the rod loading station. Ceramic spacer pellets, if required, should be placed into the cladding through the open end and pushed to the weld end. The open end of the cladding then is pressed into containment through a "movable seal" for loading; the majority of the rod remains outside of containment. (Movable seals are presently under development at HEDL and W.)

Pellets are vibrated or pushed into the cladding. This loading operation should be accomplished with the cladding in a horizontal or near-horizontal position.

Vacuum outgassing at 260°C for 2-1/2 hours is presently required for loaded BWR UO_2 fuel rods. The MOX pellets will only be oven dried and kept in dry storage before rod loading.

4.6.3 Decontamination

During loading, the end of the rod becomes contaminated with the fuel. Decontamination is required before the top end cap can be welded. The method of decontamination has yet to be developed. Some method of swabbing followed by incontainment monitoring will be required.

4.6.4 Top End Cap Welding

After the end of the fuel tube has been decontaminated, the BWR fuel tube is filled with helium to $\sim$1 atmosphere pressure. The spring and end plug are inserted. After all components are in place, the end cap is welded. Welding rates are expected to be one to two rods a minute. TIG welding is presently recommended for this welding operation. After the rods are welded, they are transferred to the pressurization station if needed (PWR only) or to the weld inspection station.

4.6.5 Pressurization (for PWR only)

After the top end cap is welded, the rod is pressurized with helium through a predrilled hole in the top end cap. PWR rod pressure is expected to be between 300 and 600 psi. After pressurization, the hole is welded by TIG or laser techniques. Pressurized rods are sent to the weld inspection station.

4.6.6 Top End Cap Weld Inspection

The top end cap weld area is inspected for defects. All rods are then helium leak-checked. A batch of 20 to 30 rods can be leak-checked in the same chamber at the same time. After the helium leak testing, the welds will be radiographed with x-rays three times after 120°C rotations to check for internal defects and small cracks. After radiography, the rods will be sent to the rod inspection station. All defective rods will be sent to the rod reject area for repair or disassembly and reclamation of all reusable parts (pellets, springs, and spacers).

4.6.7 Rod Inspection

After the top end cap weld has been inspected, the entire rod is inspected for defects. Surface flaws may be detected visually or with the aid of a reflected laser beam technique if such equipment can be developed. The rods will also be inspected for straightness on a surface plate.

After surface defect and straightness checks, the fissile content of the rod will be checked with a gamma scanner which has an external neutron source. Scanning times may vary. Slower scans can reveal pellet spacing and component placement information. After the gamma scan, the rods can be radiographed to ensure proper placement of all internal components if necessary. Fluoroscopic inspection may be used if sufficient resolution can be obtained. All acceptable rods will be sent to the assembly process area; reject rods are sent to the rod repair and salvage area.

4.6.8 Bundle Assembly

4.6.8.1 PWR

Prefabricated fuel assembly skeletons will be removed from storage. Skeletons will be handled with the aid of a hard back support and placed upon a horizontal table. Fuel rods are pushed or pulled into the proper positions in the skeleton. Top and bottom nozzles are put in place and rods are secured to the

skeleton. Additional hardware will be attached, and the fuel assembly will be sent to the assembly inspection station.

Details of PWR assembly procedures are given in a recent W report.[13] The appropriate portion of this report is included in Appendix A of this TDS.

4.6.8.2 BWR

Assembled and aligned BWR bundles with dummy rods in $(U\text{-}Pu)O_2$ fuel position will be removed from storage. These dummy rods are removed and replaced with $(U\text{-}Pu)O_2$ fuel pins. Bundle hardware, which was removed or loosened for insertion of the $(U\text{-}Pu)O_2$ rods is put in place and secured. The bundles are then sent to the inspection station.

Additional details regarding BWR assemblies are provided in the W report[13] and are included in Appendix A.

4.6.9 Bundle Inspection and Repair

After assembly, the bundles are inspected for proper dimensions and component integrity. Although complete inspection procedures are not defined, it is known that nozzle alignment, spaces, integrity and location, and pitch (rod spacing) are checked. Any component of questionable quality is repaired or replaced. After inspection and repair, the bundle is cleaned either by immersing in detergent and water rinses or rubbing down with cloths.

4.7 Bundle Storage

After assembly and inspection, the PWR assemblies and BWR bundle are stored vertically. Care should be taken to ensure proper spacing to prevent criticality. Cooling and shielding may be needed, depending upon the storage mode. W has calculated a heat generation rate of 1 to 2 W/kg of HM for a 6 wt % PuO_2 fuel in the standard W 17 × 17 assembly. The calculated values for first recycle and fourth recycle plutonium were 496 watts/assembly and 892 watts/assembly, respectively.[27]

4.8 Shipping

The bundles and fuel assemblies are loaded into DOT-approved containers and shipped by truck to customer.

4.9 Rod Reject and Repair

Reject rods will be received with notation of the defect. Repairable rods will be repaired; nonrepairable rods will be disassembled for recovery of reusable components. Nonrepairable rods will be drilled to vent any pressurized gases and the end cap will be sheared. Pellets are then removed from the rods and sent back to the pellet inspection station. Components that can be reused should be recycled. Reject fuel pellets should be sent to scrap recovery and other reject components to solid waste disposal.

4.10 Scrap Recovery and Waste Handling

4.10.1 General

Scrap will be produced in the various powder and pellet operations. Scrap $(U\text{-}Pu)O_2$ powders, granules and pellets, which meet purity specifications are estimated to be about 14% of the throughput. Other $(U\text{-}Pu)O_2$ scrap which contains cationic or organic impurities or the residues from completed analytical samples are estimated to be about 1% of the throughput.

Contaminated waste materials generated during operation of the FFF range in plutonium concentration from gross amounts to suspect concentrations. The waste with gross amounts of contamination are generated in those operations beginning with powder receiving through rod loading and decontamination. TRU-suspect wastes are generated during final rod inspection and bundle assembly. These latter wastes are classified as such by proposed regulations in 10 CFR 20 because they come from restricted areas of the facility.

A summary of the characteristics of the waste generated in the FFF is shown in Table 11. Additional details about the sources and activity ranges of all expected wastes, (solids and liquids, in $(U\text{-}Pu)O_2$ fuel fabrication facilities) are reported in Reference 28.

4.10.2 Sorting

Waste and scrap will be sent to the recovery station where the waste and scrap will be separated, perhaps by hand, in glove boxes and sent to the proper locations. Clean and dirty scrap will be packaged separately. Waste, such as gloves, boxes, rags, etc. will be sent to the Waste Solidification Facility (WSF). Powder and pellets will be sent to the Scrap Recovery Facility.

TABLE 11

Amounts and Activities of Plutonium-Contaminated Waste from Fuel Fabrication Facility (Basis: 2.2 MTHM/day)[a]

Category	*Transuranic*	
	Combustible	*Noncombustible*
A. General Drummed Waste		
Volume, ft^3	24.7	6
Weight, lb	148	374
Pu, g	44.7	10.7
TRU, Ci	800	173.3
C. Process Equipment		
Volume, ft^3		15.3
Weight, lb		495
Pu, g		33
TRU, Ci		60
E. HEPA Filters		
Volume, ft^3		5
Weight, lb		17
Pu, g		67
TRU, Ci		1200

a. Although this is a nominal daily capacity of the FFF, the actual daily generation of waste will depend upon the efficiency and utilization to be determined. Values in this table can be scaled accordingly.

4.10.3 Scrap Dissolution

The recommended method for the recycle of scrap produced in the FFF involves dissolution of the oxides in hot nitric acid. Crushing and grinding of the scrap may be necessary to aid dissolution before charging the dissolver. The dissolved scrap will serve as a major accountability point. Analysis for accountability and purity is required before returning the dissolved scrap to the SEF or to the blend tanks that couple the SEF to the CF.

4.11 Quality Assurance/Quality Control (QA/QC Program for the Fuel Fabrication Facility)

A preliminary report has been issued by W that presents a description and provides examples of a typical QA/QC program. This report is included in Appendix B.

4.12 Storage Requirements

Table 12 is a summary of the storage requirements as envisioned and recommended by Westinghouse for the MOX Fuel Fabrication Facility. Included are material receiving, in-process storage for analysis, buffers, and product storage.

TABLE 12

MOX Facility Storage Requirements (Coprocessed Feed Case)

Material Identity	*Type/Purpose of Storage*	*Location*	*Capacity/Container*
Feed Material	Coprocessed MOX, 10 wt % PuO_2-UO_2	MO_2 Receiving, PFD-SRCP-11-GA-1	800 kg lot per production line in blending silos, 2 blending tanks per line
Feed Material	UO_2	UO_2 Receiving, PFD-SRCP-33-GA-1	a) 219 MT in drums (272 kg each) - 4 months' supply b) 4.5 MT lot per line in 6 tanks, 4.5 MT each
In-Process, Analysis	Blended MO_2, Master Mix + UO_2	MO_2 Blending and Storage, PFD-SRCP-12-GA-1	2025 kg per line in 9 silos of 225 kg each
In-Process, Buffer	Pellet Press Feed	Pellet Pressing, PFD-SR-21-GA-1	50 kg per press in press feed hopper
In-Process, Buffer	Pellets for Sintering, Green Pellets and Resinter Pellets	Sintering and Storage	2 boats green pellets and 32 boats Q/M resinter per line in accumulating and shuttle conveyors, plus 3-boat buffer
In-Process, Analysis	Sintered Pellets, Boats	Sintering and Storage, PFD-SR-22-GA-1	55 boats per line, plus 3-boat buffer at each furnace exit end
In-Process, Analysis and Buffer	Dry and Released Pellets, Trays	Pellet Grinding Inspection and Storage, PFD-SR-23-GA-1	Minimum 280 trays (full or empty) per line (1 tray - ~10.5 kg pellets)
In-Process, Accumulation	Liquid Waste	Miscellaneous Waste Treatment Area, PFD-SRCP-15-GA-1	2 tanks, 200 gallons each
In-Process, Accumulation	Miscellaneous Waste, Solid	Miscellaneous Waste Treatment Area, PFD-SRCP-17-GA-1	4 weeks throughput in 55-gallon drums, ~55 drums
In-Process, Accumulation and Analysis	Clean Scrap	Scrap Treatment Operations, PFD-SRCP-13-GA-1	30 days' accumulation in clean scrap containers, 7.75 MT
In-Process, Accumulation and Analysis	Dirty Scrap	Scrap Treatment Operations, PFD-SCRP-13-GA-1	30 days' accumulation in dirty scrap transfer containers, 0.5 MT
Feed Material	Fuel Rod Hardware	Hardware Receiving, Preparation and Storage, PFD-SR-34-GA-1	Minimum of 60-day supply, 38,200 PWR rods and 11,200 BWR rods
In-Process, Buffer	Fuel Rods	Fuel Rod Inspection and Storage, PFD-SR-34-GA-2	100,000 total
In-Process, Accumulation	Reject Rods	Fuel Rod Repair and Salvage, PFD-SR-24-GA-2	30-day quantity, 575 PWR rods and 165 BWR rods
Feed Material	Assembly Hardware	Hardware Receiving and Storage, PFD-SR-39-GA-1	60-day supply, 160 PWR assemblies and 435 BWR assemblies
Product	Fuel Assemblies	Assembly Storage	Minimum of 60-day production, 160 PWR assemblies and 435 BWR assemblies
	Assembly Shipping Containers	Container Storage, PFD-SR-39-GA-1	Minimum of 30-day supply, 40 PWR containers and 55 BWR containers

5. EQUIPMENT DESCRIPTION

5.1 General Requirements

Many aspects of equipment design and performance must be considered in selecting equipment for the FFF. All equipment must be reliable, easily maintained, and must meet strict requirements for safety and performance. Criticality safety must be maintained in all equipment design, and the equipment must be adaptable to strict safeguards requirements.

The FFF should be designed to have a minimum amount of area in containment and to have a minimum number of movable parts. Where possible, rather than placing equipment in a contained area, the containment should be designed as a part of the equipment, with most of the movable parts and instrumentation outside the contained area to reduce personnel exposure during maintenance operations.

Equipment for the FFF usually must be custom designed; or, if commercially available equipment is used, modifications must be made to adapt such equipment to remote operations. W has provided a list of vendors, who can provide commercially available equipment that may be used with modifications.[31] This information is included in the individual equipment sections of this chapter; vendors addresses are listed at the end of this section.

5.2 Material Transfer

In an FFF, with an output of 2.2 MTHM/D, material transfer is of special concern. Fuel material (powder, pellets, fuel pins and fuel bundles) must be handled remotely to remove the risk of excessive personnel exposure. Each material form requires a different means of transfer.

5.2.1 Powder Transfer

Powder will be treated in batch form in the FFF. Possible means of transfer include mechanical transfer in containers or pneumatic (vacuum) transfer through pipes.

Powder containers could be transferred on conventional conveyors or on magnetized dollies. These dollies could be pulled by a motor-driven magnet outside the containment, as envisioned by HEDL. The magnetized dolly system would provide easy maintenance and minimize the number of parts that need to be in containment. However, both conventional conveyors and magnetized dollies present problems in loading and unloading, of the many containers during each batch run.

A vacuum transfer system is presently under development by W. This technique offers a promising alternative; however, several items remain to be demonstrated. Some of these items include buildup of material in lines, particle attraction, segregation of blended powders, and segregation of particles by size.

5.2.2 Pellet Transfer

Pellets must be treated both in batches and as individual pellets. Batches of pellets may be moved in boats by the previously described dollies or by conventional conveyors. When individual pellets are to be moved, cam-operated devices being developed at HEDL ("pellet pickers") can be used. These devices move pellets only over short distances (about 1 foot), but rates of ten pellets per second are feasible.

5.2.3 Rods and Bundles

The movement of rods and bundles can be by conventional rod conveyors and overhead cranes, respectively. The required transfer rates of one to two rods per minute and one to two bundles per hour allow for these conventional methods of transfer.

5.3 $(U\text{-}Pu)O_2$ Master Blend Equipment

5.3.1 Receiving

Facilities are needed to move a batch of master blend powder into the FFF from the secured storage area or vault that interfaces the CF with the FFF. Maximum batch size in the CF is expected to be 7.0 MTHM; about nine days output. This entire batch will be packaged in 38 kilogram containers in the CF and placed in the secured storage area.

The properties of the batch of master blend powder should be uniform from one container to another with respect to isotopic composition. Blending of the powder from various cans into one large batch is required for constant ceramic properties. Master blend powder is then transferred from the storage container into a large storage tank or directly into a weigh hopper. All tanks and hoppers are to be critically safe and able to withstand natural disasters. Weigh hoppers and large-scale blenders are not commercially available and must be custom designed. Nondestructive accountability instruments will be needed in the master blend receiving/storage areas.

5.3.2 Loading $(U\text{-}Pu)O_2$ Master Blend

Facilities are needed to transfer the $(U\text{-}Pu)O_2$ master blend from storage tanks to weigh hoppers and from weigh hoppers to blenders for blending with natural UO_2 powder. Pneumatic transfer lines may be used if powder separation and buildup in the lines are proved not to be a problem. Alternatively, hoppers may be arranged so that gravitational flow can be used to transfer powder. Dusting, powder buildup in lines, and separation of UO_2 and PuO_2 are major concerns in transfer operations; and special care should be taken with these problems in equipment design.

5.4 UO_2 Equipment

5.4.1 Receiving

Facilities are needed to receive UO_2 and to store this material in tanks until needed. Forklifts and other unloading equipment are needed to unload containers of UO_2 powder. Minimum container size should be a 55-gallon drum; larger container sizes are acceptable.

5.4.2 Unloading UO_2

Facilities will be needed to transfer UO_2 powder from storage to feed hoppers. A contained area will be needed to prevent dusting and contamination of the loading area. Drums of UO_2 can be mechanically dumped into weigh hoppers. The powder should be passed through a large mesh sieve, about 14 mesh, to remove any tramp material from the UO_2 powder. Weigh hoppers will deliver proper batch sizes to the large-scale blenders for blending with the master blend. Blending of residual UO_2 into new blends will be required.

5.5 Cladding and PWR Bundle Hardware Equipment

5.5.1 Receiving

Facilities must be provided to unload incoming cladding and PWR bundle hardware. Truck docks, forklifts, and other dock equipment are needed. Storage space is required.

5.5.2 Inspection and Cleaning

Facilities are needed for inspection of cladding and hardware for shipping damage and gross defects. A thorough inspection is done at the supplier, and detailed inspection equipment is not

needed in the FFF. Facilities should be provided to inspect a statistical sample of the cladding for ID, OD, length, and wall thickness. The interior of the cladding and components will be cleaned by blowing felt wads dampened with solvent through the tube. Component hardware will be cleaned in degreasing solutions and ultrasonic baths. Overhead cranes and material handling baskets are needed.

5.5.3 Welding Bottom End Cap

A welder is needed to weld the bottom end cap into position. TIG welding is presently used. Welding heads must be custom designed. A possible power supply is the Miller Power Supply TXR-100 with accessories.

5.5.4 Weld Inspection

Weld inspection facilities should include ring gages for outside diameter measurements, helium leak detectors, and X-ray equipment to inspect 100% of the welds. Possible equipment for the leak test system are a vacuum system produced by Leybold-Hereaus Inc. or leak detector CEC Model Type 24-120 B produced by Consolidated Electrodynamics.

Facilities may also be required to cut the cladding to the proper length. A cutoff wheel, length gage, and end deburring apparatus may be needed for cladding preparation. An alternative is to buy the cladding already cut to the proper length or buy with one end cap in place. Storage facilities are needed to keep components clean and dry.

5.6 BWR Bundles from UO_2 Plant

5.6.1 Receiving

Facilities must be provided to unload incoming BWR bundles purchased from UO_2 fuel plants. These bundles will have dummy rods in the $(U\text{-}Pu)O_2$ rod positions. Cranes, forklifts, and other dock equipment are needed. Temporary storage space is needed.

5.6.2 Unpackaging, Inspection, and Storage

The BWR fuel bundles will be removed from the shipping crates, inspected for gross damage, and stored in a clean, dry atmosphere in criticality safe arrays. (This storage area could be identical to the completed fuel bundles.) Bundles may be hung from a rack

above floor level. Each bundle will require proper identification to indicate order number, design enrichments, number of $(U\text{-}Pu)O_2$ rods, etc. Bundles must be handled with strong backs when being transferred in a horizontal position. Overhead cranes and other handling equipment will be required.

5.7 Pellet Fabrication Equipment

5.7.1 Blending and Milling

Facilities are needed to blend a batch of master blend powder and natural UO_2 powder. Feed hoppers for proper batching are needed. Blenders of the size needed are not commercially available and must be custom designed. All blenders must be critically safe. Nondestructive assay equipment may be needed to ensure uniformity of blends.

Facilities are required to discharge the blended powder from the blender through a hammer mill to storage. A standard hammer mill will provide functional requirements, but custom modifications will be needed to meet materials handling requirements. Nondestructive assay equipment and balances are required for accountability. Material transfer may be made by gravity feed assisted by some mechanical vibrations or possibly by vacuum transfer.

5.7.2 Compacting

Facilities are needed to press the blended powder into compacts with a length-to-diameter ratio of $\leq 1:5$. The compactor should be capable of producing compacts with diameters up to 2.5 inches at pressures ranging from 10,000 to 40,000 psi. A roll compactor could be used to produce ribbon-shaped compacts. Integral compacts will not be required nor will different sized compacts be needed for different fuel orders. One compactor is needed for each process line. Presses or roll compactors can be supplied by Fitzpatrick Company, Piece Equipment Engineering Company, or Komarek-Greanes Co. The compactor will be designed with custom power train and material handling features.

5.7.3 Granulating

Facilities are needed to granulate compacts to proper size for pellet pressing. Model 43-C granulator from Stokes Equipment Division can meet functional requirements after custom modifications. Sizing can be supplied with the SWECO Separator Model 5185333 with custom modifications for material handling and functional requirements.

A customized system with a standard feeder should be provided for adding lubricant to the granules. Mixing of the lubricant with the granules should be gentle to prevent additional breakup of the granules. In-process storage facilities for powder may be needed.

5.7.4 Pressing

Facilities should be provided for pressing fuel pellets. Presses are presently available that are capable of pressing 5 to 10 pellets per second which will meet expected process rates. Rotary presses or multicavity presses are two types of presses which can be used. Hydromet-American Model HCR-60XL with custom modifications is a possible selection for a multicavity press. Presses should have easily interchangeable dies to provide for various pellet sizes and enrichments and automatic die lubrication with a constant volume feed to the die cavities. Facilities should be provided to define a bad die in a multicavity press. Pellets are to be produced to strict dimensional tolerances.

Facilities are also needed for statistical inspection of the green pellet length, diameter, and weight. Nondestructive analytical equipment will be needed for accountability. Custom-designed equipment is needed to load pressed pellets into sintering boats. This equipment may be designed to distinguish between chipped and integral pellets and to remove the chipped pellets from the process.

5.7.5 Sintering

Facilities are required for sintering fuel pellets at temperatures of 1700 to 1800°C. The sintering furnace can either be a pusher type or a walking beam furnace. Both types of furnaces will require about 500 square feet of floor space. The sintering furnace must consist of three zones for process purposes:

- A heatup region of temperature <500°C where volatiles may be removed slowly
- A high-temperature region with temperatures between 1700 and 1800°C for sintering
- A cooldown region where pellets are returned to ambient temperature.

Time in these three zones is estimated to be 4 to 6, 8, and 4 to 6 hours, respectively. The furnace liner may be constructed of a refractory metal, zirconium oxide, or high purity alumina

and should be capable of containing a 6% H_2/N_2 atmosphere. The interior of the furnace should be designed, if possible, to serve as primary containment with heating coils and high-maintenance parts located outside the contained area. However, this design is complicated because of the high sintering temperature required (1700 to 1800°C). Several sintering furnaces will be needed because of 16 to 24 hour dwell time of each pellet batch. Possible custom fabricators for the furnaces are the Lindberg Company or BTU Engineering.

Conveyors are needed to transfer boats of sintered pellets from the furnace to the grinding station.

5.7.6 Grinding

Facilities are needed for centerless grinding of pellets to within ±0.5 mil on the diameter. Grinding can be done either dry or wet with water as a lubricant/cooling agent. Dry grinding is the recommended method, but it requires special care for dust control.

Royal Master Grinders, Inc., produces a centerless grinding unit (Royal Master Model TG-12) that has been custom designed for material handling problems and gaging functions on fuel pellets. One potential component of a sludge recovery system is a Lavin Centrifuge Model 2160 from A. M. Lavin Machine Works. Rotary hoppers will align pellets for feeding into the grinder and for feeding into the pellet inspection station after grinding and drying.

Facilities should also be designed to provide for spray washing and subsequent drying of the pellets. Pellet dryers will require a maximum temperature capability of about 200°C.

5.7.7 Inspecting

High-speed equipment should be included for 100% inspection of the fuel pellet attributes. Inspection rates on each line will be between two and three pellets per second. There is no commercial equipment available to meet these production rates; therefore, most equipment must be developed. HEDL is developing pellet inspection equipment for fast reactor fuel pellets. In the HEDL prototype equipment, diameter and length are measured with laser optics and photo diode techniques similar to those used in ammunition cartridge inspection. Chips and surface flaws are detected, also, with the reflected laser technique. Weights are taken with a Scientech balance. All data are fed to a controlling computer, and pellets that do not meet specifications

are automatically rejected. Pellets are moved between inspection stations by a cam-operated device called a "pellet picker." Accountability information can be obtained from the weight and number of pellets. Equipment will be needed to stack pellets on trays and store these trays until needed.

5.8 Encapsulation Equipment

5.8.1 Form Pellet Stack and Load Rod

Equipment should be provided to form and gage the stack of fuel pellets before insertion of the stack into the cladding. This equipment must be custom designed to perform this specialized task and should automatically retrieve trays of pellets of the desired enrichment from storage, form a pellet stack of the proper length and weight, record all pertinent data, and insert the row of pellets into the cladding. Pellets may either be vibrated or pushed into a horizontal or nearly horizontal tube. A movable seal will be required to isolate the open end of the cladding rod which is inside containment from the remainder of the rod located outside containment. This movable seal is still in the developmental stage at both HEDL and W. Conveyors will be needed to transfer the rods to the decontamination station.

5.8.2 Decontamination of Loaded Rods

Facilities are needed for the remote and automatic decontamination of the weld area of loaded fuel pins. Decontamination equipment has not yet been developed. One method, however, could consist of throw-away wipes which are inserted into the open end of a fuel tube on a nipple to wipe the tube clean. Monitors will determine contamination levels on the rods.

5.8.3 Welding of Top End Cap and PWR Rod Pressurization

Equipment is needed to weld the top end cap onto loaded fuel rods. Equipment should be designed to evacuate the air from the BWR fuel rod and backfill the rod with helium to approximately 1 atmosphere pressure. The equipment must then insert the spring, getter, and end cap and weld the end cap. TIG welding is presently done. A custom-designed welder could be used with a Miller Power Supply TXR-100.

The equipment at this station must also be designed to pressurize PWR rods with helium at pressure of 300 to 600 psi. These rods can be pressurized through a predrilled hole in the top end cap. After the rods are pressurized, the hole in the

end cap is then sealed either by laser welding or TIG welding. Pressurization should be accomplished in a small chamber placed over the end of the rod to prevent pressurization of the containment area in the event a leak occurs in the pressure chamber.

5.8.4 Top End Cap Weld Inspection

Equipment is required to inspect the top end cap weld of loaded fuel rods. Inspection equipment should include outside diameter ring gage, helium leak detectors, and X-ray equipment. The leak detection system could consist of a vacuum system from Leybold-Hereaus, Inc. and a Model Type 24-120B leak detector from Consolidated Electrodynamics Company — custom modification is needed. The leak detection system should be capable of testing several rods at one time. X-ray equipment for the weld would be a custom-designed system with a standard 300 to 350 kV unit supplied by Seibert X-ray Corporation or Philips Electronic Instruments.

5.8.5 Finished Rod Inspection

Equipment is needed for 100% inspection of fuel rods for surface flaws, straightness, fissile content, and component placement. A positive rod identification system will be required. Surface flaws can be detected by visual inspection. Straightness can be determined with a granite slab roll table. The fissile content can be determined with a gamma scanner after activation with a neutron source. A gamma scanner is capable of determining the fissile content of each pellet along with some data of component placement. The gamma scanner can be supplied by IRT Corporation or National Nuclear Corporation. X-ray equipment may be needed for determination of component placement in each of the three rod inspection areas. X-ray equipment can be identical to that used for end cap inspection. Storage facilities are needed that can hold up to 100,000 completed fuel rods of the eighty-nine enrichments.

5.8.6 Bundle Assembly

Equipment is needed to assemble PWR assemblies and to complete the assembly of BWR bundles. BWR bundles and PWR assemblies will take place in separate areas. Fuel designs that are expected to be fabricated are listed in Table 1. Equipment will be required to either push or pull fuel rods into an assembled PWR skeleton and to fasten these rods to the bottom tie plates. Top and bottom nozzles are secured to the subassembly to complete the operation. All operations are remote and will require considerable custom design of equipment.

To complete BWR bundle assembly, equipment will be required to:

a. Remove the skeleton BWR bundle from storage

b. Remove the desired $(U\text{-}Pu)O_2$ BWR fuel rods from storage

c. Remove the dummy rods in the $(U\text{-}Pu)O_2$ positions from the BWR bundle and insert the $(U\text{-}Pu)O_2$ rods.

d. Secure tie plates and other bundle hardware. As with the assembly of a PWR assembly, BWR assembly operations will be remote and require custom-designed equipment.

5.8.7 Final Bundle Inspection

Equipment will be needed to remotely inspect completed fuel bundles. Measurements must be taken of pitch (the distance between individual rods) and vertical alignment of bundles. These inspections for PWR bundles are likely to be more thorough than the inspections for BWR bundles because the entire PWR bundle assembly is made in the FFF; BWR bundles will initially be aligned in a UO_2 fuel fabrication facility. Automated inspection equipment is not available and must be custom designed. Further bundle inspections will be determined by specifications on the bundle. Information on these specifications are presently considered proprietary by the different vendors.

5.9 Storage of Bundles

Facilities for storage of at least 500 bundles in clean, dry atmosphere are needed. The facility should be shielded; cooling may be required depending upon the mode of storage. Bundles may be hung from racks above floor level or stored in borated concrete arrays below floor level. Bundles must be handled with strong backs when being transferred horizontally. Overhead cranes and other handling equipment should be provided.

5.10 Shipping

Completed fuel bundles to be shipped by truck can be handled either by forklift or overhead crane. Shipping containers will contain two bundles and are four feet in diameter and 15 feet long. Truck docks are needed for loading these bundle casks.

5.11 Rod Reject and Repair

A glove box facility is needed for the repair or disassembly of damaged fuel rods. Vises, drills, cutoff wheels, and deburring tools will be required to open damaged rods. Weld repair will be done at regular weld stations.

5.12 Damaged Bundle Repair

Damaged bundles will be repaired in the regular assembly area. The same equipment used for assembly will be used to disassemble damaged bundles. Those bundles which cannot be repaired will be sent to scrap recovery.

5.13 Scrap Recovery

Equipment is required to process the $(U\text{-}Pu)O_2$ scrap from the pellet fabrication process. The UO_2 scrap will be collected as generated in the individual process lines, weighed, and assayed for accountability purposes. Clean and dirty scrap will be kept separate at all times. The scrap will be packaged in containers and shipped to the Scrap Recovery Facility on the recycle complex.

5.14 Equipment Requirements

Individual equipment requirements for the facility are listed on the detail process flow diagrams (PFDs) furnished by W in their study for the separate streams and coprocessing cases. These requirements are contained in the W final report.[24,25]

Addresses of Possible Vendors for FFF Equipment

Consolidated Electrodynamics
1500 South Shamrock Avenue
Monrovia, CA 91016

Fitzpatrick Company
Elmhurst, IL 60126

Hydromet American, Inc.
4300 Delemere Boulevard
Royal Oak, MI 48073

IRT Corporation
7650 Conroy Ct., Box 80817
San Diego, CA 92138

Komarek-Greanes Company
Rosemont, IL 60018

A. M. Lavin Machine Works
3500 Davisville Road
Hatboro, PA 19040

Leybold-Heraeus, Inc.
200 Seco Road
Monroeville, PA 15146

Lindberg
304 Hart Street
Watertown, WI 53094

Miller Electric Mfg. Company
718 South Bounds Street
Appelton, WI 54911

National Nuclear Corporation
3150 Spring Street
Redwood City, CA 94063

Peeco Equipment Eng. Company
Summit, NJ 07901

Philips Electronic Instruments
85 McKee Drive
Mahwah, NJ 07430

Royal Master Grinders, Inc.
State Highway No. 23
Riverdale, NJ 07457

Seifert X-Ray Corporation
P. O. Box 294
Fairville Village, PA 19409

Stokes Equipment Division
Pennwalt Corporation
5500 Labor Road
Philadelphia, PA 19120

Sweco, Inc.
6033 E. Bandini Boulevard
Los Angeles, CA 90051

BTU Engineering
North Billerica, MD

Patterson-Kelley Company
122 Burson Street
East Strondsburg, PA 18301

6. NUCLEAR AND PROCESS SAFETY

The potential for accidents exists in the operations of the Fuel Fabrication Facility. Included in these accident possibilities are fire, explosion, criticality, and radiation. Strict safety requirements must be met in all aspects of facility design and operation.

6.1 Fire

Fire in the FFF could result in serious consequences, including dispersion of PuO_2 to the surrounding environment. To reduce the possibility of fire a strict fire safety program should be followed.

Many combustibles, including gloves, plastics, decontamination agents, lubricants, electrical insulation, and solvents for degreasing fuel rods and components are common in normal operations of the FFF. The inventory of these combustible materials should be kept to a minimum, and facilities should be provided to store all necessary combustible materials in covered metallic containers. Electrical fires are also possible in the FFF. Overload detectors and quick action breakers should be provided to prevent sustained electrical overloads.

6.2 Explosion

The possibility of an explosion also exists in the normal operation of the FFF. Explosions can be caused by malfunction of the gas supply and improper ventilation for solvents used for degreasing and decontamination. Fire and explosion possibilities are the same, with the most serious result being the release of PuO_2 to the surrounding environment. Explosions can be reduced by:

- Buying the sintering gas certified at 6% hydrogen - 94% nitrogen which is below the combustible limit.
- Installing temperature gages and automatic cooling systems on all flammable solvents.
- Reinforcing containment around all possible explosion sites.

6.3 Window and Glove Failures

In many cases, glove box windows and gloves will serve as

primary containment in the FFF. It is necessary to minimize the possibility of rupture of these containment barriers. To do so, equipment and process lines should be designed with redundant checks to prevent rapid changes in pressure that could cause containment rupture. All process equipment should be designed to prevent:

- Material impact with containment windows from internally generated missiles
- Pinch points that might cut a glove
- Sharp edges that might puncture a glove

All contained areas must be kept under slightly negative pressure with respect to building atmosphere to provide for inward flow if the containment barriers are broken.

6.4 Criticality

6.4.1 General

The FFF must be designed to prevent a criticality incident under any credible operation or emergency conditions. The worst emergency conditions is the simultaneous flooding of the area and the rupture of a large process or storage vessel. This combination of events causes moderation of large quantities of fissile material. Site selection for the facility should prohibit flooding of the facility from the natural environment. Sources and quantity of water within the facility should be reduced; and where it is available in the process area, the design of the equipment and the layout of the area should prohibit contact of the mixed oxide material and the water. Fire protection in the process areas should be provided by Halon instead of water sprinkling systems.

Because a large quantity of $(U\text{-}Pu)O_2$ powders will be held in a single vessel, the vessel must be designed to prevent a criticality incident unless two or more independent accidents occur. Wherever possible, a vessel must be designed to hold less than the critical mass of MOX powder. If a vessel does contain more than the critical mass, this vessel must be designed to have a critically safe geometry. A critically safe geometry is one of such a size and shape that the particular combination of fuel within could never sustain a chain reaction regardless of the mass of material involved. In addition, a vessel containing more than the critical mass must be designed to survive a design basis earthquake.

6.4.2 Subcritical Limits

The subcritical limit is the limiting value assigned to a controlled parameter. The parameter results in a system known to be subcritical, provided the limiting value of no other controlled parameter of the system is voilated. The subcritical limit allows for uncertainties in the calculations and experimental data used in its derivation but not for errors, e.g., double batching or failure of analytical techniques to yield accurate values.

Subcritical limits were calculated for the separate stream case, for pure PuO_2, and for blends with a maximum of 6 wt% PuO_2.[32] There will be some relief in the coprocessing case because a separate stream of 100% PuO_2 will never be processed. The maximum concentration of PuO_2 in MOX will be 10% by weight. This maximum occurs in the master blend as well as in some BWR enrichments. The limits calculated for the separate stream case are applicable to coprocessing and are representative of the maximum PWR enrichments. Further calculations have been made by Westinghouse [33] and Forstner[34] to extend the data to 10% PuO_2.

Table 13 gives the values for the subcritical limits calculated for the separate stream case. The limits were calculated for damp ($\leq$1.5% H_2O) PuO_2, for damp PuO_2 mixed homogeneous with damp UO_2, and for a homogeneous slurry of $(U\text{-}PuO)_2$ and water. A contiguous water reflector of infinite thickness was assumed to surround each process or storage vessel. The plutonium in all cases was assumed to be 100% ^{239}Pu; the maximum enrichment was assumed to be 6 wt %; and the uranium was assumed to be natural uranium (0.71 wt % ^{235}U). The density of the MOX powders, granules, and green pellets was assumed to be 5.7 grams/cm^3; and the density of the sintered pellets and grinding sludge was assumed to be 11.08/cm^3. (Wet grinding is not recommended because of the drastic effect of moisture on criticality.) In all cases, the density included the moisture. The methods of calculation and relationship to a proposed ANSI standard are discussed in References[32,35,36,37] Interactions of the various units should be considered in any final designs. An assessment of interaction requires a specification of vessel sizes, locations, and credible contents.

Table 14 shows the effect of moisture on the subcritical limits for up to 6% PuO_2. This effect is quite pronounced; therefore, sufficient incentitive may be indicated for rigid control of the moisture content to something less than 1.5%.

W has provided some criticality design criteria for the MOX FFF along with critical and safe mass design valves for up to 10 wt % PuO_2 in Reference 33. The results are summarized along with the assumptions used in Tables 15 and 16.

TABLE 13[a]

Subcritical Limits for PWR Process Operations[35]

Variable	Process Limits: PuO_2 Powder Storage and Blending	PWR Powder Blending and Storage	Green Pellets	Sintered Pellets	Grinding Sludge
% PuO_2	100.0	≤6.0	6.0	6.0	6.0
Density g/cm^3	5.7	5.7	5.7	11.0	11.0[b]
Moisture content, wt % H_2O	≤1.5	≤1.5	≤1.5	≤1.5	[b]
Mass, kg Pu	23.8	180.0	180.0	55.8	0.660
Volume, L	4.8	606.0	606.0	97.3	16.5
Sphere Diameter, cm	21.0	105.0	105.0	57.0	31.6
Cylinder Diameter, cm	12.2	72.2	72.2	39.2	21.0
Slab Thickness, cm	2.8	35.2	35.2	18.2	8.9

a. Table 13 is based upon the assumption of infinite thickness water reflection.
b. In grinding operations the optimum concentrations of Pu in the water were assumed. Mass limits occur at a concentration of 27 grams Pu/L.

Table 14[a]

Effect of Moisture on Subcritical Limits[32]

Variable	Value					
% PuO_2	100		6		6	
Oxide Density, gm/cm^3	5.7		5.7		11.0	
Condition	Dry	Damp	Dry	Damp	Dry	Damp
Mass, kg Pu	26.89	23.74	1323.0	180.0	391.6	55.7
Volume	5.35	4.79	4387.0	605.4	672.7	97.2
Sphere Diameter, cm	21.70	20.92	203.2	105.0	108.8	57.0
Cylinder Diameter, cm	12.54	12.18	142.6	72.2	76.0	39.0
Slab Thickness, cm	2.888	2.845	74.2	35.2	38.4	18.2

a. Table 14 is based upon the assumption of infinite thickness water reflection.

TABLE 15

Criticality Safe Mass Limit Estimates for $(Pu\text{-}U)O_2$ Mixed Oxide Materials[a]

Weight Percent PuO_2 in MOX	*Powder Density, g/cc*	*Degree of Moderation*	*Approximate Critical Mass Pu, Kg*	*Safe Mass Pu, Kg*	*Safe Mass MOX Kg*
10	4.7	1.5 wt % H_2O	175.0	135.0	1530.0
6	4.7	1.5 wt % H_2O	300.0	230.0	4330.0
10	∿0.5	Optimum Moderation	1.2	0.9	10.0
6	∿0.5	Optimum Moderation	1.0	0.7	12.0
6	5.6	1.0 wt % H_2O	1050.0	810.0	15,200.0
6	11.0	0 (Completely Dry)	380.0	290.0	5,500

a. Assumptions:

1. Isotopic Composition = 80 wt % ^{239}Pu, 10 wt % ^{240}Pu, 10 wt % ^{241}Pu, 0.72 wt % ^{235}U, 99.28 wt % ^{238}Pu
2. Complete water reflection
3. Spherical Geometry
4. Safety factor applied to critical massess (column 4) to obtain safe masses (columns 5 and 6) = 1.3. [No allowance is made for double batching].

TABLE 16

Criticality Design Analysis
Safe Geometry Dimensions for COMOX and MOX
Process Containers

Process Container	*Total Mass Per Container*	*Geometry*	*Assumed Conditions*	*Safe Dimensions, Inches*[1] *6 wt %*	*10 wt %*[b]	*Parameter*
Receiving Storage	800 Kg COMOX	Slab	1 wt % H_2O Maximum, 5.6 g/cc powder density, nominal reflection[c]	10[a]	10[a]	Thickness
Batch Weighing Feed Hopper	135 kg maximum 100 Kg nominal COMOX	Slab	Optimum moderation nominal reflection	4.7[d]	4.7[d]	Thickness
Enrichment Blender	225 Kg MOX	Slab	Optimum moderation nominal reflection	5.3	4.7	Thickness
MOX Storage	225 Kg MOX	Slab	Optimum moderation	5.3	4.7	Thickness
Compactor Feed Hopper	15 Kg MOX	Cylinder	5.6 g/cc powder nominal reflection	11	9.5	Diameter
Press Feed Hopper	50 Kg MOX	Cylinder	Optimum moderation nominal reflection	11	9.5	Diameter
Green Pellet Storage Boats	17 Kg MOX	Slab (12 x 12 x 5 in. max)	Optimum moderation density ≤11.0, g/cc nominal reflection	5.0	4.7	Thickness
Sintered Pellet	17 Kg MOX	Slab (12 x 12 x 5 in. max)	Optimum moderation density ≤11.0 g/cc nominal reflection	5.0	4.7	Thickness
Sintered Pellet Storage Trays	14 Kg max MOX	Slab (26 x 14 x 0.5 in. max)	Optimum moderation density ≤11.0 g/cc nominal reflection	5.0	4.7	Thickness
Grinder Feed	18 Kg MOX	Slab (18 in. dia x 0.6 in. H.)	Optimum moderation density ≤11.0 g/cc nominal reflection	5.0	4.7	Thickness
Grinder Sludge in Separator	250 Kg MOX	Slab (40 in. x 36 in. x 4.0 in.)	Optimum moderation density ≤11.0 g/cc nominal reflection	5.0	4.7	Thickness
Rod Loading, Pellets in Tube	3.4 Kg max. MOX	Slab	Optimum moderation density ≤11.0 g/cc Complete H_2O reflect.	3.9	3.5	Thickness
Rod Storage (50 rods/channel)	170 Kg/channel (Max)	Slab + Safe Array	2 wt % H_2O density 10.5 g/cc Complete H_2O reflect.	8.5	N.A.[e]	Thickness
PWR Fuel Assembly	460 Kg MOX	Safe Array	Flooded density=11.0 g/cc Complete H_2O reflect	≥12		Distance
BWR Fuel Assembly	N. A.[e]		Same as above		N.A.[e]	

a. Safe Dimensions include safety factor of 1.2.
b. Maximum concentration of PuO_2 in PuO_2 + UO_2 (MOX) fuel material.
c. Nominal reflection is defined as the linear average of bare (unreflected) and fully water reflected conditions.
d. These values are the same for 6 and 10 wt % fuel since 10 wt % COMOX feed is used in both cases.
e. Not available. Although this value is not available through analysis or experiment it is judged to be safe to assume the same value as for PWR assemblies since less fissionable material is contained in a BWR assembly.

Table 17 summarizes the results of calculations by Forstner in Reference 34. In these calculations, the subcritical limits as a function of geometry, density, and moisture content are given for both thick water reflection and nominal reflection cases at a PuO_2 enrichment of 10 wt %. As can be seen from the data in the tables, each set has a slightly different set of assumptions. For the purposes of this design, the data for Table 17 for thick reflection should be used unless this places an unduly severe restriction on the design. Nominal reflection could be used if the design could guarantee that full flooding was not credible. If full flooding cannot be eliminated, then reduced slab thickness and cylinder dimensions given by the Westinghouse data of Table 16 should be used.

General guidance for criticality safety practices is contained in an American National Standard.[37] Additional limits for $(U\text{-}Pu)O_2$ oxides are contained in the proposed ANSI Standard already mentioned.

6.5 Radiation and Shielding

6.5.1 General Requirements

The FFF should be designed to limit the radiation exposure of all operating personnel to one rem per year.[38] To meet this requirement, sufficient shielding will be provided to limit radiation levels to <0.5 mrem per hour in continuously occupied (operating) areas and to <5 mrem per hour in intermittingly occupied areas (areas occupied <10% of the time). Equipment and containment enclosures will be designed to minimize material buildup in cracks, corners, and other hard to clean areas.

All information available for radiation and shielding is included in this technical data summary. Slightly different assumptions are used in each set of calculations. The total shielding requirements for this design should be based upon the information given by Tables 22 and 23.

6.5.2 Initial Shielding Guides

Representative radiation dose rate and shielding calculations were made for $(U\text{-}Pu)O_2$ powder batches contained in slab tanks and $(U\text{-}Pu)O_2$ fuel pellets in three configurations with three different PuO_2 isotopic compositions (Table 18). These compositions represent startup (I), interim (II) and equilibrium III conditions of plutonium recycle. These calculations were made for mixtures of 6 wt % PuO_2 and 94 wt % UO_2. Therefore, the calculations shown in Tables 19, 20, and 21 are representative of the maximum dose rates and shielding for equipment and process lines dedicated to PWR fuel fabrication. The

TABLE 17

Subcritical Limits for a 10% PuO_2 - 90% UO_2 Oxide

Reflection →	*Thick H_2O*					
Density, gm/cm³ →	*3.0*		*5.7*		*11.0*	
Moisture	*Dry*	*Damp*[a]	*Dry*	*Damp*	*Dry*	*Damp*
Mass, MOX kg	8742	3513	2808	1147	916	378
Cylinder Diameter, cm	119	88	65	48	36	26
Slab Thickness, cm	55	40	29	21	15	11
Reflection →	*Nominal*					
Mass, MOX kg	21,371	7619	6000	2226	1646	616
Cylinder Diameter, cm	174	124	91	65	47	34
Slab Thickness, cm	101	71	53	37	27	19

a. Damp oxide contains 1.5% H_2O. Densities include H_2O.

TABLE 18

Expected Isotopic Content of Pu_2 for Startup Interim and Equilibrium Conditions[39]

Isotope	*Case I Startup*	*Case II Interim*	*Case III Equilibrium*
^{236}Pu	1×10^{-3}	1×10^{-3}	1×10^{-3}
^{238}Pu	2	4	6
^{239}Pu	61	43	29
^{240}Pu	24	26	27
^{241}Pu	10	16	17
^{242}Pu	3	11	21

master blend with a plutonium concentration fixed at 10 wt % PuO_2 and BWR fuel with a maximum plutonium concentration 10% also will produce higher dose rates and will require more shielding.

The data from these initial calculations (Tables 19, 20, and 21) are useful in showing the general size of the shielding that would be required for startup or through the equilibrium recycle. The FFF should be designed for the equilibrium case.

The primary radiation hazards are due to low energy (<100 keV) gamma photons from decay of plutonium isotopes and decay daughters. Self-absorption within the source material was more prevalent for higher density (10 grams/cm^3)$(U\text{-}Pu)O_2$ compared with the lower density (1.5 grams/cm^3) $(U\text{-}Pu)O_2$ powder. However, the 0.25-inch steel walls of the powder slab tank more than makeup the difference.

6.5.2.1 Methods of Calculation

Radiation dose rate and shielding calculations are based upon neutrons from spontaneous fission and α, n reactions with natural oxygen; gamma photons from plutonium and decay daughters, residual fission products, spontaneous fission, and α, n reactions were also considered. The ANISN computational code was used for neutron dose rate and shielding calculations. SDC and PUSHLD codes were used for gamma radiation and shielding calculations.

6.5.2.2 Bases for Calculations

The assumptions made to initiate the shielding calculations include the following:

- $(U\text{-}Pu)O_2$ powder/pellets will contain 94% uranium oxide and 6% plutonium oxide which are aged one year from reactor discharge.
- Powder batches will have a density of 1.5 grams/cm^3 with one wt % H_2O.
- Pellet density will be 10 grams/cm^3.
- Powder batches will be contained in slab tanks with 0.25-inch (0.64 cm) steel walls. Inner dimensions will be 4.0 feet (122 cm) wide x 8 feet (244 cm) high x 2.5 inches (6.35 cm) thick.
- 200 kilograms of $(U\text{-}Pu)O_2$ powder will be contained in each slab tank.
- As many as four slab tanks may be side by side with 2 feet (61 cm) separation between tanks.

TABLE 19

Expected Dose Rates from PWR Powder and Pellets with Wt % PuO_2, mrems/hr - Unshielded[42]

Powders in Slab Tanks

Distance, Inches/cm	*One Slab Tank*[a]			*One Slab Tank*[a]		
	I[a]	*II*[a]	*III*[a]	*I*[a]	*II*[a]	*III*[a]
12/30.5	285	520	745	345	625	895
18/45.7	200	360	515	240	432	618
24/61.0	150	270	380	180	324	455
30/76.2	120	210	295	145	255	355

Pellets

Distance, inches/cm	*1 Row of Pellets*[b]			*1 Tray of Pellets*[c]			*10 Trays of Pellets*[d]		
	I	*II*	*III*	*I*	*II*	*III*	*I*	*II*	*III*
2/5.10	995	1,750	2,400	8,530	15,000	21,000	19,000	33,000	46,500
6/15.25	330	590	810	3,260	5,800	7,900	16,550	28,550	40,000
12/30.50	165	295	400	1,650	2,900	4,000	12,530	22,000	30,000
24/61.0	80	140	195	800	1,400	1,950	7,600	13,500	18,500
36/91.50	50	90	125	500	900	1,200	5,100	9,000	12,500

a. Isotopic contents given in Table 18.
b. One row of pellets 144 inches long stored horizontally.
c. Tray of 10 rows of pellets.
d. Stack of 10 trays of pellets.

TABLE 20

Required Shielding for Continously and Intermittently Occupied Areas with 6 wt % PuO_2 Powder[a] (Reference 39)

One or More Slab Tanks
One Foot (30.5 cm) Separating Tank and Shield
0.5 mrems/hr, Continuously Occupied Areas

Case I

1.25 inches/3.2 cm Steel, inside		0.25 inches/0.64 cm Steel, inside
19.1 inches/48.5 cm Water	or	19.1 inches/48.5 cm Water
1.25 inches/3.2 cm Steel, outside		0.25 inches/0.64 cm Steel
		0.70 inches/1.78 cm Lead, outside

Case II

1.25 inches/3.2 cm Steel, inside		0.25 inches/0.64 cm Steel, inside
24.0 inches/61 cm Water	or	24.0 inches/61 cm Water
1.25 inches/3.2 cm Steel, outside		0.25 inches/0.64 cm Steel
		0.80 inches/2 cm Lead, outside

Case III

1.25 inches/3.2 cm Steel, inside		0.25 inches/0.64 cm Steel, inside
27 inches/68.6 cm Water	or	27 inches/68.6 cm Water
1.25 inches/3.2 cm Steel, outside		0.25 inches/0.64 cm Steel
		0.90 inches/2.3 cm Lead, outside

5.0 mrems/hr, Intermittently Occupied Areas - <10% of Work Day

Case I

0.5 inches/1.27 cm Steel, inside		0.25 inches/0.64 cm Steel, inside
8.8 inches/22.4 cm Water	or	8.8 inches/22.4 cm Water
0.5 inches/1.27 cm Steel, outside		0.25 inches/0.64 cm Steel
		0.125 inches/0.32 cm Lead, outside

Case II

0.5 inches/1.27 cm Steel, inside		0.25 inches/0.64 cm Steel, inside
10.5 inches/26.7 cm Water	or	10.5 inches/26.7 cm Water
0.5 inches/1.27 cm Steel, outside		0.25 inches/0.64 cm Steel
		0.15 inches/0.38 cm Lead, outside

Case III

0.5 inches/1.27 cm Steel, inside		0.25 inches/0.64 cm Steel, inside
12 inches/30.5 cm Water	or	12 inches/30.5 cm Water
0.5 inches/1.27 cm Steel, outside		0.25 inches/0.64 cm Steel
		0.20 inches/0.51 cm Lead, outside

---

a. Powder batches will be contained in slab tanks with 0.25 inches/0.64 cm steel walls. Inner dimensions will be 4.0 feet (122 cm) wide x 8 feet (244 cm) high and 2.5 feet (6.35 cm) thick.

TABLE 21

Required Shielding for Continuously and Intermittently Occupied Areas with 6 wt % PuO_2 Pellets

One Row of Pellets
One Foot (30.5 cm) Separating Pellets and Shield

0.5 mrem/hr

I		II		III	
Lead	*Steel*	*Lead*	*Steel*	*Lead*	*Steel*
0.11 in./0.28 cm	1.0 in./2.54 cm	0.15 in./0.38 cm	1.32 in./3.36 cm	0.20 in./0.51 cm	1.38 in./3.50 cm

5.0 mrems/hr

0.05 in./0.11 cm	0.4 in./1 cm	0.06 in./0.15 cm	0.53 in./1.34 cm	0.79 in./0.20 cm	0.55 in./1.4 cm

One Tray of Pellets
One Foot (30.5 cm) Separating Pellets and Shield

0.5 mrems/hr

I	II	III
0.75 in./1.91 cm Steel, inside	1.0 in./2.54 cm Steel, inside	1.0 in./2.54 cm Steel, inside
2.0 in./5.10 cm Water	2.5 in./6.35 cm Water	3.0 in./7.62 cm Water
0.75 in./1.91 cm Steel, outside	1.0 in./2.54 cm Steel, outside	1.0 in./2.54 cm Steel, outside
or	or	or
0.25 in./0.64 cm Steel, inside	0.25 in./0.64 cm Steel, inside	0.25 in./0.64 cm Steel, inside
2.0 in./5.10 cm Water	2.5 in./6.35 cm Water	3.0 in./7.62 cm Water
0.25 in./0.64 cm Steel	0.25 in./0.64 cm Steel	0.25 in./0.64 cm Steel
0.25 in./0.64 cm Lead, outside	0.40 in./1.0 cm Lead, outside	0.40 in./1.0 cm Lead, outside

5.0 mrems/hr

I		II		III	
Lead	*Steel*	*Lead*	*Steel*	*Lead*	*Steel*
0.25 in./0.64 cm	1.5 in./3.81 cm	0.35 in./0.89 cm	2.0 in./5.1 cm	0.40 in./1.0 cm	2.25 in./5.72 cm

0.5 mrems/hr

I	II	III
1.25 in./3.18 cm Steel, inside	1.375 in./3.5 cm Steel, inside	1.5 in./3.81 cm Steel, inside
4.75 in./12.1 cm Water	6.0 in./15.3 cm Water	7.0 in./17.8 cm Water
1.25 in./3.18 cm Steel, outside	1.375 in./3.5 cm Steel, outside	1.5 in./3.81 cm Steel, outside
or	or	or
0.25 in./0.61 cm Steel, inside	0.25 in./0.64 cm Steel, inside	0.25 in./0.64 cm Steel, inside
4.75 in./12.1 cm Water	6.0 in./15.3 cm Water	7.0 in./17.8 cm Water
0.25 in./0.64 cm Steel	0.25 in./0.64 cm Steel	0.25 in./0.64 cm Steel
0.875 in./222 cm Lead, outside	1.0 in./2.54 cm Lead, outside	1.125 in./2.86 cm Lead

5.0 mrems/hr

I	II	III
0.625 in./1.6 cm Steel, inside	0.75 in./1.9 cm Steel, inside	0.875 in./2.3 cm Steel, inside
2.0 in./5.1 cm Water	3.50 in./8.9 cm Water	4.0 in./10.2 cm Water
0.625 in./1.6 cm Steel, outside	0.75 in./1.9 cm Steel, outside	0.875 in./2.3 cm Steel, outside
or	or	or
0.25 in./0.64 cm Steel, inside	0.25 in./0.64 cm Steel, inside	0.25 in./0.64 cm Steel, inside
2.0 in./5.1 cm Water	3.50 in./8.9 cm Water	4.0 in./10.2 cm Water
0.25 in./0.64 cm Steel	0.25 in./0.64 cm Steel	0.25 in./0.64 cm Steel
0.25 in./0.64 cm Lead	0.3125 in./0.8 cm Lead, outside	0.375 in./0.95 cm Lead, outside

- Pellets will be 0.3 inch (0.762 cm) diameter x 0.35-inch-high (0.889 cm) high cylinders.
- Pellet batches will consist of:
  - 1 row of pellets 144-inches (366 cm) long, stored horizontally
  - 10 rows of pellets in a tray stored horizontally
  - 10 trays of pellets stored vertically
- Plutonium Isotopic Composition will be as shown in Table 15.
- Residual Fission Product Contamination will be:

  ^{95}zr - Nb 2.5×10^2 P/S grams Pu

  ^{106}Ru - Rh 5.9×10^3 P/S grams Pu

6.5.3 Shielding Design Criteria

6.5.3.1 General

Westinghouse has recommended shielding criteria for the MOX facility based upon the Recycle Fuel Plant design. The shielding thicknesses are increased to account for the increase in PuO_2 enrichment to 10 wt %.[33] A detailed discussion is given on the RFP multi-radiation zone concept where the zones are designated as restricted access area (RAA), limited access area (LAA), and normal access area (NAA). These zones are comparable to Ventilation Zones I, II, III, respectively, of Nuclear Regulatory Guide 3.12. The three zones have a design objective for radiation dose limits of $\leq$100 mrem per hour for the RAA, 2.5 mrem per hour for the LAA (when shielded glove ports and window openings are closed, i.e., shutters are in place), and 0.25 mrem per hour for the NAA.

6.5.3.2 Shield Materials

The type of shield material used may vary, depending upon the application required. In general, dense materials such as lead or steel are used for beta-gamma shielding; however, low density materials such as water, cement, or hydrocarbon polymers work well for neutron shielding. To be acceptable for the MOX facility, shielding will have to possess certain physical characteristics, such as the inability to support combustion.

The Westinghouse RFP design has a "sandwich" of steel with a high-efficiency neutron shielded material in between steel plates. This shielding scheme is used in the canyon area where there is a need to reduce thickness for maintenance purposes through gloves. Concrete is used in other areas where thickness is not a principal concern for operating purposes. W recommends standard concrete (density 140 16/feet^3) along with *Ricorad*® as the sandwich material. Eight inches of the *Ricorad* steel shielding is approximately equivalent to a shield of 15 inches of standard concrete for the source spectra considered.

6.5.3.2 Shielding Design Thicknesses

W has calculated shielding thickness for the different process areas according to limited close rates at outer shield surfaces of 2.4 mrem per hour in the limited access area (LAA) and 0.25 mrem per hour in the normal access area (NAA). Size and shape of the vessels were determined from their criticality studies presented earlier. The shield thickness requirements for powder process areas are summarized in Table 22. Shielding thicknesses for other plant process areas are calculated as shown in Table 23 for both 6 and 10 wt % PuO_2 in MOX product fuel. Details of these results are given in Reference 33.

6.6 Industrial Safety

All OSHA standards for industrial safety should be applied to equipment and facility design.

**Ricorad* is a trade name by Reactor Experiments, Inc.

Table 22

Shield Design Thicknesses for COMOX and MOX Containing Powder Process Areas in A Large Scale Fuel Fabrication Plant

Process	*Source Component*	*Shield Thickness* LAA *Concrete, in.*	*Shield Thickness* LAA *RR-SS,*[a] *in.*	*Additional Shield Thickness* NAA *Concrete, in.*
Receiving Storage	800 Kg COMOX in 10-in.-thick tank	15	8.0	8.0
Batch Weighing	100 Kg COMOX in 4.7-in.-thick tank	14	8.0	8.0
Enrichment Blending	225 Kg 6 wt % MOX in 5.3-in.-thick tank	12	7.0	8.0
MOX Storage	225 Kg 6 wt % MOX in 5.3-in.-thick tank	12	7.0	8.0

a. Combination of 50% by volume steel - 50% by volume *Ricorad* shielding.

TABLE 23

Shield Design Thicknesses for Miscellaneous Process Areas in a Large-Scale Fuel Fabrication Plant

Process/Component	*Shielded Quantity*	*Shield Thickness, inches of concrete or equivalent*[a]	
		6 wt % PuO_2	*10 wt % PuO_2*
Feed Hoppers on Compactor and Pelleting Presses	50 kg MOX	11[b]	12[b]
Furnace and Boat Conveyors	2 lines of 17 kg MOX/ft	12	14
Pellet Boat Unloading Stations	36 kg MOX	11	12
Pellet Grinding and Inspection Areas	2 kg MOX	3.5	5.0
Pellet Storage Units	3950 kg MOX	24	27
Tube Loading Glove Boxes	50 kg	10	12
Rod Welding Glove Boxes	1 kg	3.5	5.0
Rod Transfer Carriers	50 rods	17[c]	18[c]
Rod X-Ray and γ Scan Area	25 rods	10	12
Rod Storage Area	20,000 rods	25	26
Emergency Control Center	–	24	24

a. 12 in. of concrete is approximately equivalent to 3.5 in. of steel + 3.5 in. *Ricorad*.
b. The side of the granulator is shielded by 12 inches of concrete or equivalent and the discharge from the granulator screens requires 1-in. thick concrete or equivalent side shields.
c. This source is shielded to a dose rate of 0.25 mrem per hour.

REFERENCES

1. Letter from N. Stetson, Energy Research and Development Administration, Savannah River, Aiken, SC to J. D. Ellett, E. I. du Pont de Nemours and Co., Wilmington, DE (May 4, 1977).

2. R. T. Huntoon, D. T. Rankin, J. T. Scarborough, and J. P. Howell. *Fuel Fabrication Facility - Co-processing Case.* DPSTD-AFCT-77-12, Savannah River Laboratory, E. I. du Pont de Nemours and Co., Aiken, SC (1977).

3. Letter from L. H. Meyer, Savannah River Laboratory, E. I. du Pont de Nemours and Co., Aiken, SC to N. Stetson, Energy Research and Development Administration, Savannah River, Aiken, SC (July 13, 1977).

4. H. J. Clark and J. M. Boswell. *LWR Fuel Recycle Facilities — Capacity of Conceptual Design.* DPSTD-LWR-76-100, Savannah River Laboratory, E. I. du Pont de Nemours and Co., Aiken, SC (1976).

5. G. D. Childs and E. P. Gerstenhaber. *IFRC-MOX Product Mix, Fuel Supply Requirements and Interfacing Fuel Cycle Service Supply Activities.* IFRC-77-259, Westinghouse Electric Corporation, Pittsburg, PA (1977).

6. *Nuclear Reactors Built, Being Built, or Planned in the United States as of June 30, 1976.* TID-8200-R34, Oak Ridge National Laboratory, Oak Ridge, TN (1976).

7. *Final Generic Environmental Statement on the Use of Recycle Plutonium in Mixed Oxide Fuel in Light Water Cooled Reactors.* NUREC-0002, Vol. 3, U.S. Nuclear Regulatory Commission, Washington, DC (1976).

8. Letter from R. S. Miller, Westinghouse Electric Corporation, Nuclear Fuels Division, Pittsburgh, PA to R. S. Wingard, Savannah River Laboratory, E. I. du Pont de Nemours and Co., Aiken, SC (November 26, 1975).

9. Letter from C. R. Anderson, Combustion Engineering, Hartford, CT to G. F. Merz, Savannah River Laboratory, E. I. du Pont de Nemours and Co., Aiken SC (February 27, 1976).

10. Letter from J. S. Tulenko of Babcock and Wilcox Company, Lynchburg, VA to G. F. Merz, Savannah River Plant, E. I. du Pont de Nemours and Co., Aiken, SC (November 18, 1975).

11. Letter from L. L. Zahn, Jr., General Electric Co., San Jose, CA to R. S. Wingard, Savannah River Laboratory, E. I. du Pont de Nemours and Co., Aiken, SC (December 8, 1975).

12. Private Communication from Washington Public Power Supply System, 3000 George Washington Parkway, Richland, WA to M. J. Barr, Hanford Engineering Development Laboratory, Richland, WA (November 12, 1976).

13. H. H. Crain. *Preliminary Criteria for the Design of a Fuel Fabrication Facility.* FPER-77-137, Westinghouse Electric Corp., Pittsburg, PA (1977).

14. R. T. Huntoon, D. T. Rankin, and J. D. Scarbrough. *Mixed Oxide Fuel Fabrication Facility.* DPSTD-LWR-77-4, Savannah River Laboratory, E. I. du Pont de Nemours and Co., Aiken, SC (1977).

15. Letter from J. C. Limpert, Westinghouse Electric Corp., Nuclear Fuels Division, Pittsburg, PA to T. H. Gould, Savannah River Laboratory, E. I. du Pont de Nemours and Co., Aiken, SC (May 16, 1977).

16. J. M. Boswell and L. A. Heinrich. *Technical Data Summary — Safeguards Requirements for a 10 MTU/Day LWR Fuel Reprocessing Plant.* DPSTD-LWR-76-4, Savannah River Laboratory, E. I. du Pont de Nemours and Co., Aiken, SC (1976).

17. J. M. Boswell and L. A. Heinrich. *Technical Data Summary — Safeguards Requirements for a 10 MTU/Day LWR Fuel Reprocessing Plant.* DPSTD-LWR-76-4, Addendum 3, Savannah River Laboratory, E. I. du Pont de Nemours and Co., Aiken, SC (1977).

18. "General Design Criteria — Plutonium Facilities." *ERDA Manual,* Appendix 6301, Part II, Section I (1974).

19. *Light Water Reactor Fuel Reprocessing and recycling.* ERDA-77-75, U.S. Energy Research and Development Administration, Washington, DC (1977).

20. J. P. Shipley, D. C. Cobb, R. J. Dietz, M. L. Evans, E. P. Schelonka, D. B. Smith, and R. B. Walton. *Coordinated Safeguards for Materials Management in a Mixed-Oxide Fuel Facility.* LA-6536, Los Alamos Scientific Laboratory, Los Alamos, NM (1977).

21. R. M. Horgos. *Safeguards Criteria for a Large-Scale Mixed Oxide Fuel Fabrication Facility.* RPDE-78-068, Westinghouse Electric Corp., Nuclear Fuels Division, Pittsburg, PA (1978).

22. *Code of Federal Regulations, Title 10.* U. S. Government Printing Office, Washington, DC (January 1977).

23. *Code of Federal Regulations, Title 10* — Part 50 (10 CFR 50), Appendices P and Q, U.S. Government Printing Office, Washington, DC (January 1977).

24. *System Description for DIS Mixed-Oxide Fuel Fabrication Plant — Separate Feed Streams (PuO_2–UO_2) Case.* Contract No. EY-77-C-09-0945, Westinghouse Electric Corp., Nuclear Fuels Division, Pittsburg, PA (1978).

25. *System Description for DIS Mixed-Oxide Fuel Fabrication Plant — Co-Processed Feed (COMOX) Case.* Contract No. EY-77-C-09-0945, Westinghouse Electric Corp., Nuclear Fuels Division, Pittsburg, PA (1978).

26. T. H. Gould, Jr. and R. T. Huntoon. *Technical Data for FFF—Separate Stream Case.* DPST-AFCT-77-150, Savannah River Laboratory, E. I. du Pont de Nemours and Co., Aiken, SC (1977).

27. Letter from R. F. Duda, Westinghouse Electric Corp., Nuclear Fuels Division, Pittsburg, PA, to W. B. Wilson, U.S. Department of Energy, Savannah River Plant, Aiken, SC (February 18, 1977).

28. "Transuranic Waste Disposal." *Federal Register,* vol. 39, No. 178, pp 32921-32923 (September 12, 1974).

29. E. L. Albenesius. *AFCT Solid Waste Processing—MOX Waste Addition (Addendum to Technical Data Summary).* DPST-AFCT-77-142, Savannah River Laboratory, E. I. du Pont de Nemours and Co., Aiken, SC (1977).

30. A. S. Jennings and T. J. Warren. *Technical Data Summary for Product Conversion.* DPSTD-AFCT-77-10, Savannah River Laboratory, E. I. du Pont de Nemours and Co., Aiken, SC (1977).

31. C. D. John, Jr. *Identifications of Specialized Fabricating Equipment for the Manufacture of Mixed Oxide Fuels.* Westinghouse Electric Corp., Nuclear Fuels Division, Pittsburg, PA (1977).

32. H. K. Clark. *Subcritical Limits for LWR MOX Facility.* DPST-LWR-77-120, Savannah River Laboratory, E. I. du Pont de Nemours and Co., Aiken, SC (1977).

33. *Nuclear Criticality and Shielding Design Criteria and Preliminary Design Values for a Large-Scale Mixed Oxide Fuel Facility.* Contract No. EY-77-C-09-0945, Westinghouse Electric Corp., Nuclear Fuels Division, Pittsburg, PA (1978).

34. Inter-office Memorandum from J. L. Forstner to R. R. Herries. "Nuclear Criticality Safety Analysis 78-3 Alternate Fuel Cycle Technology—Expanded Set of Subcritical Limits for the MOX Fuel Fabrication Facility." DPSPU-78-272-105, Savannah River Laboratory, E. I. du Pont de Nemours and Co., Aiken, SC (July 10, 1978).

35. H. R. Clark. *Computer Codes for Nuclear Criticality Safety Calculations.* USAEC Report DP-1121, Savannah River Laboratory, E. I. du Pont de Nemours and Co., Aiken, SC (1967).

36. G. E. Hansen and H. C. Paxton. *Re-Evaluated Critical Specifications of Some Los Alamos Fast-Neutron Systems.* LA-528, Los Alamos Scientific Laboratories, Los Alamos, NM (1969).

37. *American National Standard Nuclear Criticality Safety in Operations with Fissionable Materials Outside Reactors.* ANSI-N16.1, American National Standard Institute, Inc. New York, NY (1976).

38. "Facilities General Design Criteria Handbook." *ERDA Manual,* Appendix 6301 (March 25, 1977).

39. Inter-Office Memorandum from G. W. Earle to R. G. Garvin." "Shielding Guides—LWR Mixed Oxide Fuel Fabrication Facility." Savannah River Laboratory, E. I. du Pont de Nemours and Co., Aiken, SC (July 7, 1977).

40. L. A. Heinrich. *Technical Data Summary—Safeguards Requirements for a 10 MTU/Day LWR Fuel Reprocessing Plant, U/Pu Co-processing Fuel Cycle.* DPSTD-AFCT-77-11, Savannah River Laboratory, E. I. du Pont de Nemours and Co., Aiken, SC (1977).

APPENDIX A

FUEL ASSEMBLY DESCRIPTION FOR A TYPICAL PWR ASSEMBLY AND A TYPICAL BWR BUNDLE AS PROVIDED BY WESTINGHOUSE

1.0 FUEL ASSEMBLY DESCRIPTION

1.1 W PWR Fuel Assembly

The Westinghouse fuel assembly (Figure A-1), typical for all PWR fuel assemblies, is a square array of fuel rods structurally bound together. The fuel rods, guide thimble tubes, and one instrumentation tube are arranged within the supporting structure. The instrumentation thimble is in the center position and provides a channel for insertion of an incore neutron detector, if the fuel assembly is in an instrumented core position. The guide thimbles provide channels for insertion of either a rod cluster control assembly, a neutron source assembly, a burnable poison assembly, or a plugging device, depending upon the position of the particular fuel assembly in the core. Figure A-2 shows a cross-section of the fuel assembly array, and Figure A-3 shows a fuel assembly full length view. The fuel rods are loaded into the fuel assembly structure so that there is clearance between the fuel rod ends and the top and bottom nozzles.

1.1.1 Fuel Rods

The fuel rods consist of mixed oxide ceramic pellets contained in slightly cold worked Zircaloy-4 tubing. The tubing is plugged and seal welded at the ends to encapsulate the fuel. A schematic of the fuel rod is shown in Figure A-4.

1.1.2 Fuel Assembly Structure

The fuel assembly structure consists of a bottom nozzle, top nozzle, guide thimbles, and grids (Figure A-3).

1.1.2.1 Bottom Nozzle

The bottom nozzle is a boxlike structure which serves as a bottom structural element of the fuel assembly. The square

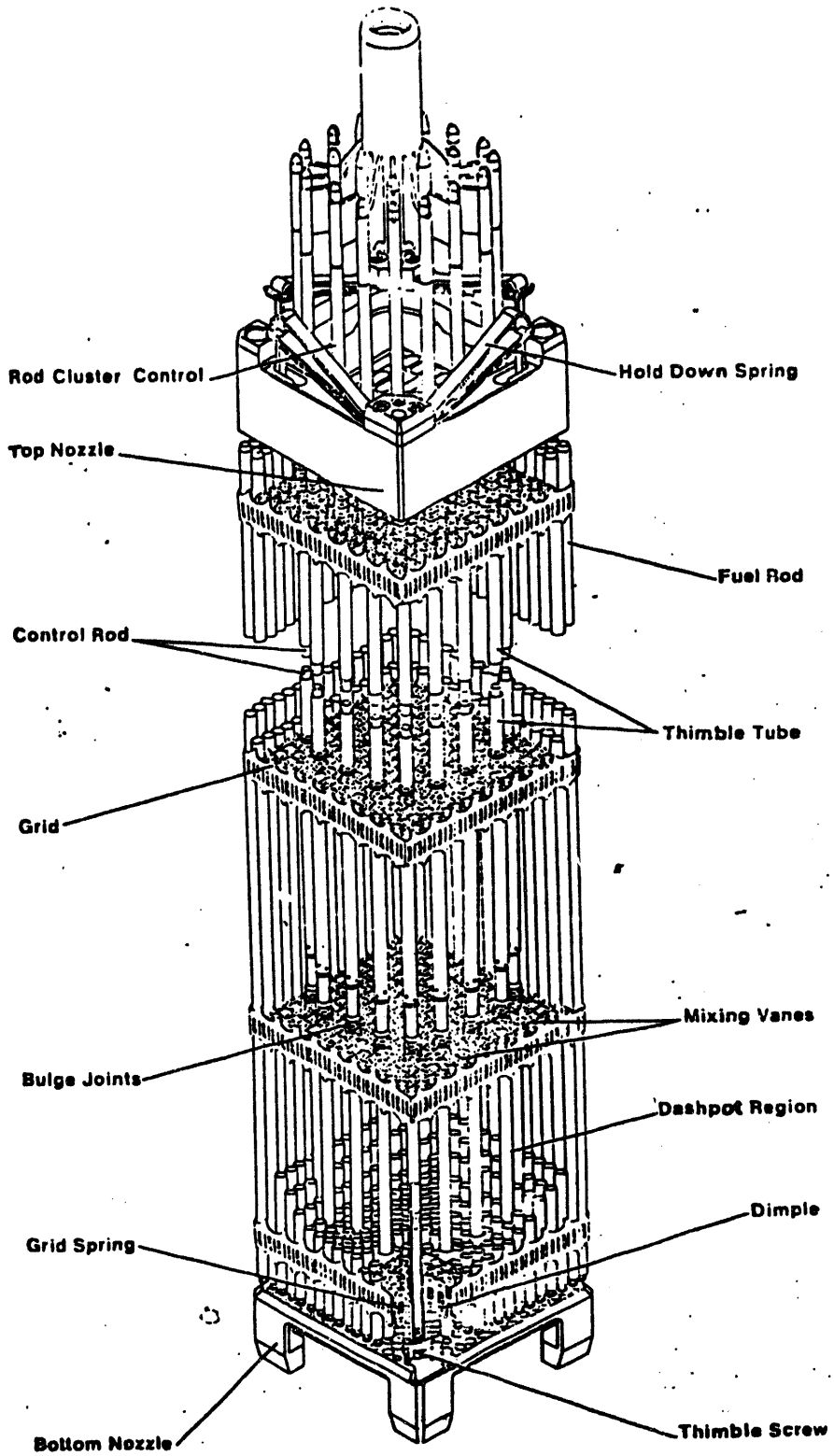

FIGURE A-1. Westinghouse Fuel Assembly

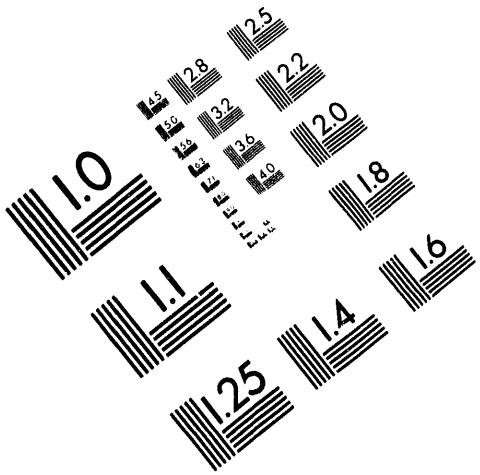

AIIM

Association for Information and Image Management

1100 Wayne Avenue, Suite 1100
Silver Spring, Maryland 20910

301/587-8202

Centimeter

Inches

MANUFACTURED TO AIIM STANDARDS
BY APPLIED IMAGE, INC.

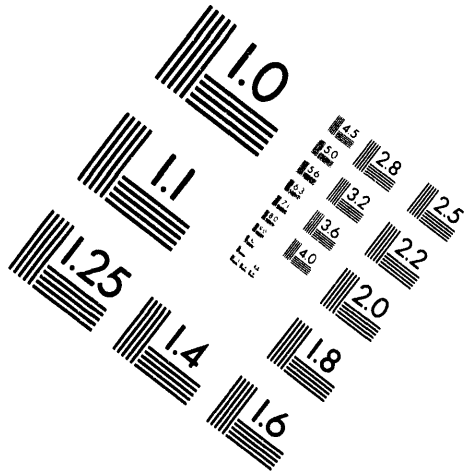

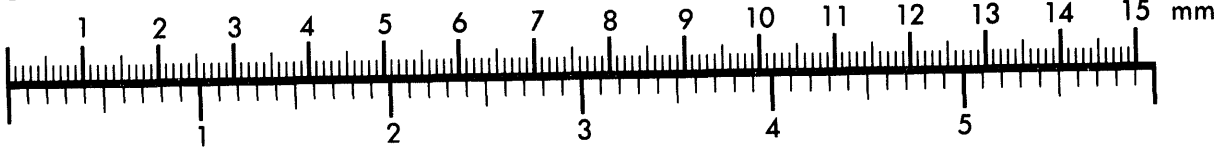

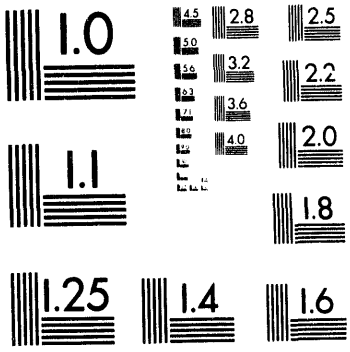

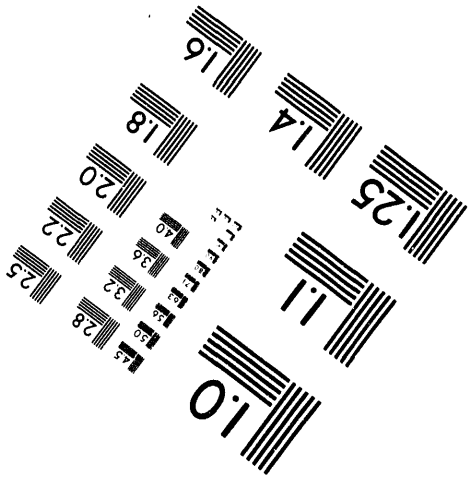

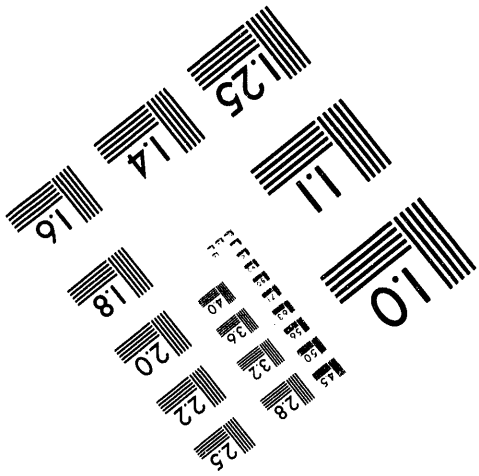

2 of 2

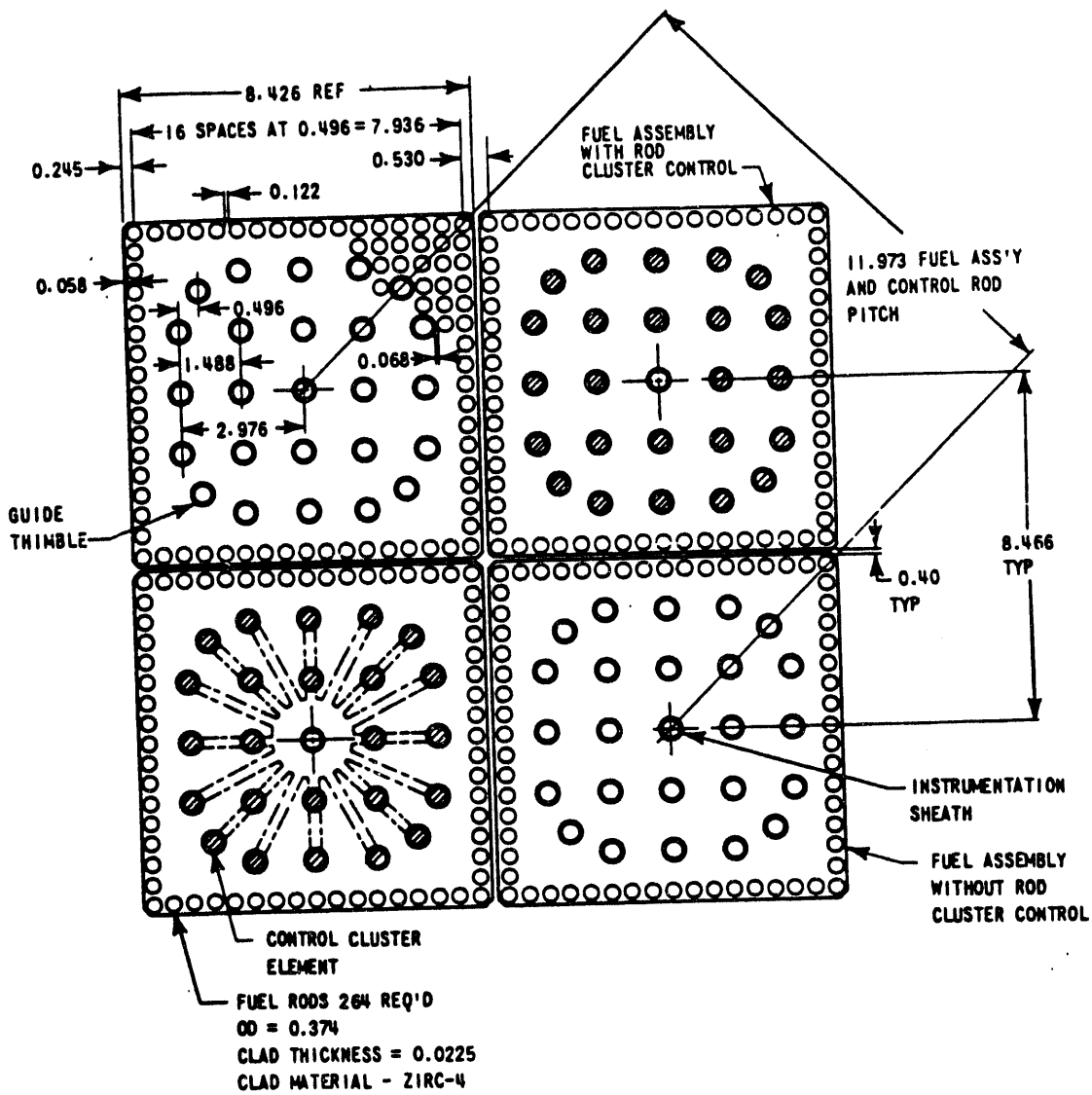

FIGURE A-2. Fuel Assembly Cross Section 17 x 17

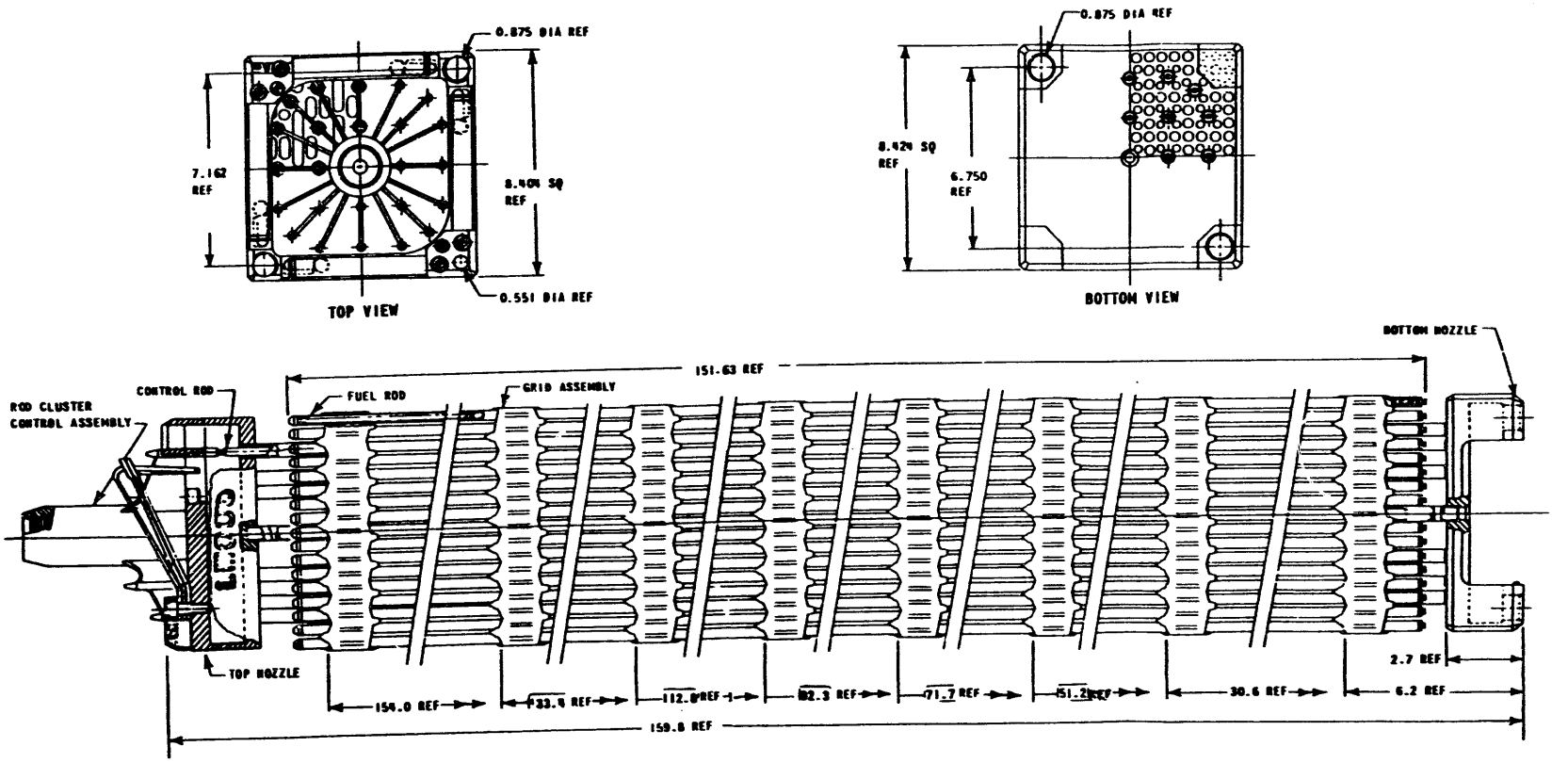

FIGURE A-3. Fuel Assembly Outline 17 x 17

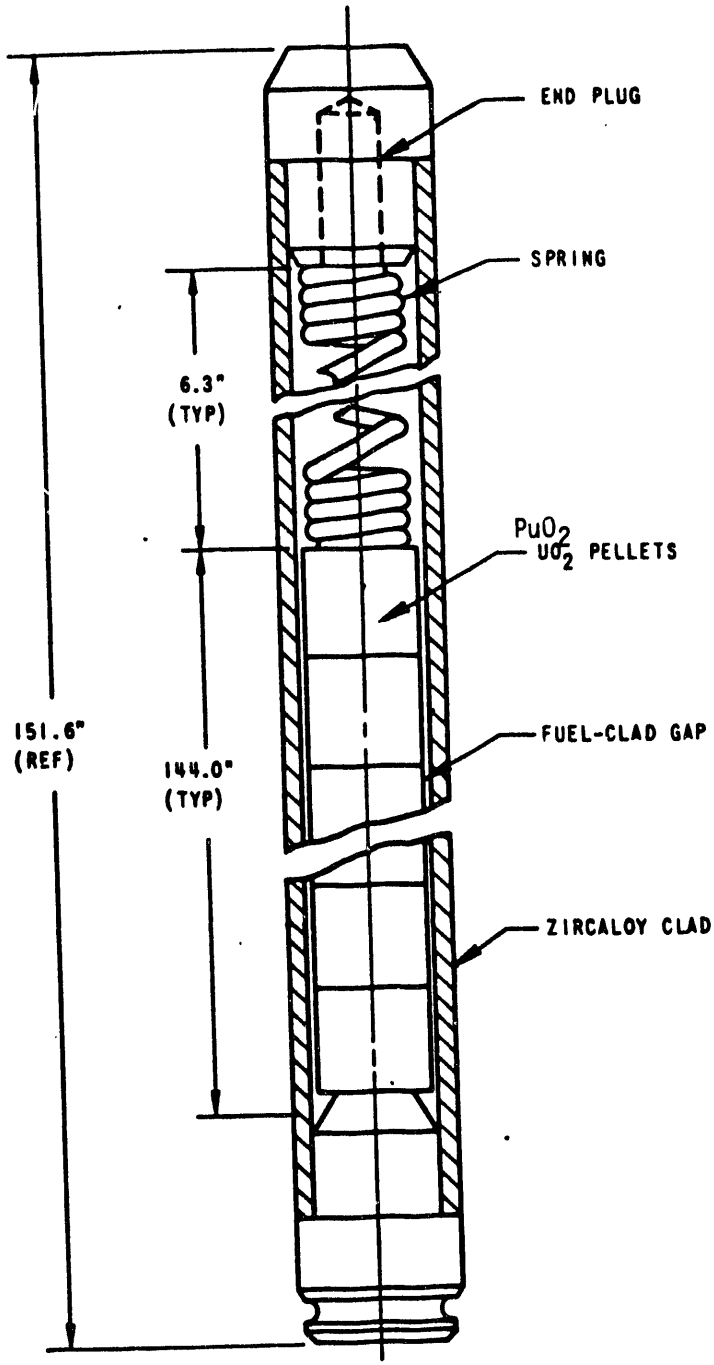

SPECIFIC DIMENSIONS DEPEND ON DESIGN VARIABLES SUCH AS PRE-PRESSURIZATION. POWER HISTORY. AND DISCHARGE BURNUP

FIGURE A-4. Fuel Rod Schematic

nozzle is fabricated from Type 304 stainless steel and consists of a perforated plate and four angle legs with bearing plates, (Figure A-3). The bottom nozzle is fastened to the fuel assembly guide tubes by weld-locked screws which penetrate through the nozzle and mate with an inside fitting in each guide tube.

1.1.2.2 Top Nozzle

The top nozzle assembly functions as the upper structural element of the fuel assembly in addition to providing a partial protective housing for the rod cluster control assembly or other components. It consists of an adapter plate, enclosure, top plate, and pads. The integral welded assembly has hold-down springs mounted on the assembly (Figure A-3). The springs and bolts are made of *Inconel**-718 and *Inconel**-600, respectively, whereas other components are made of Type 304 stainless steel.

1.1.2.3 Guide and Instrument Thimbles

The guide thimbles are structural members which also provide channels for the neutron absorber rods, burnable poison rods, or neutron source assemblies. Each one is fabricated from Zircaloy-4 tubing with two different diameters. The top end of the guide thimble is fastened to a tubular sleeve by three expansion swages. The sleeve fits into the top nozzle adapter plate and is welded in place. The lower end of the guide thimble is fitted with an end plug which is then fastened into the bottom nozzle by a weld-locked screw.

In rod cluster control type fuel assemblies, each grid is fastened to the guide thimble assemblies to create an integrated structure. Westinghouse has chosen the fastening technique depicted in Figures A-5 and A-6 for all but the top and bottom grids in a fuel assembly.

The top grid-to-nozzle attachment is shown in Figure A-7. The stainless steel sleeves are brazed into the *Inconel* grid assembly. The Zircaloy guide thimbles are fastened to the long sleeves by expanding the two members (Figures A-5 and A-6). Finally, the top ends of the sleeves are welded to the top nozzle adapter plate (Figure A-7).

An expanding tool is inserted into the inner diameter of the Zircaloy thimble tube at the elevation of stainless steel sleeves that have been brazed into the *Inconel* grid assembly.

---

* Trademark of Huntington Alloys, Inc.

MID GRID EXPANSION JOINT DESIGN

SCALE 2:1

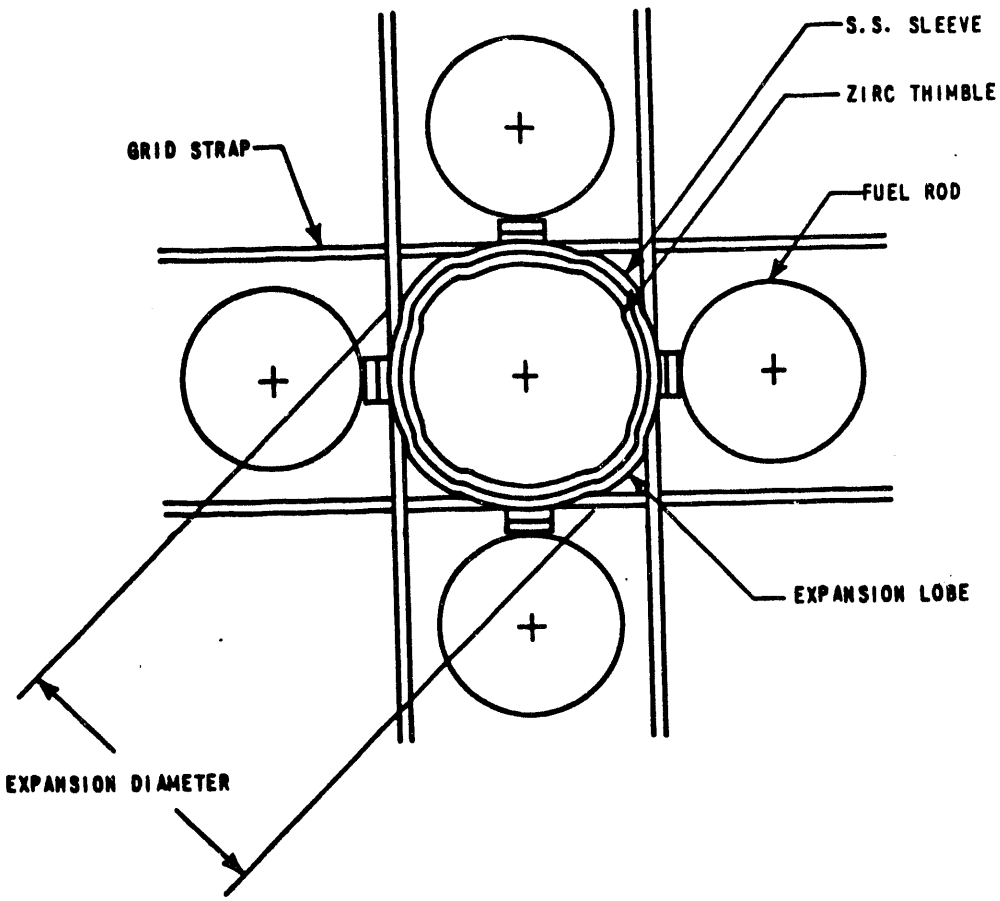

FIGURE A-5. Plan View

SCALE 1:1

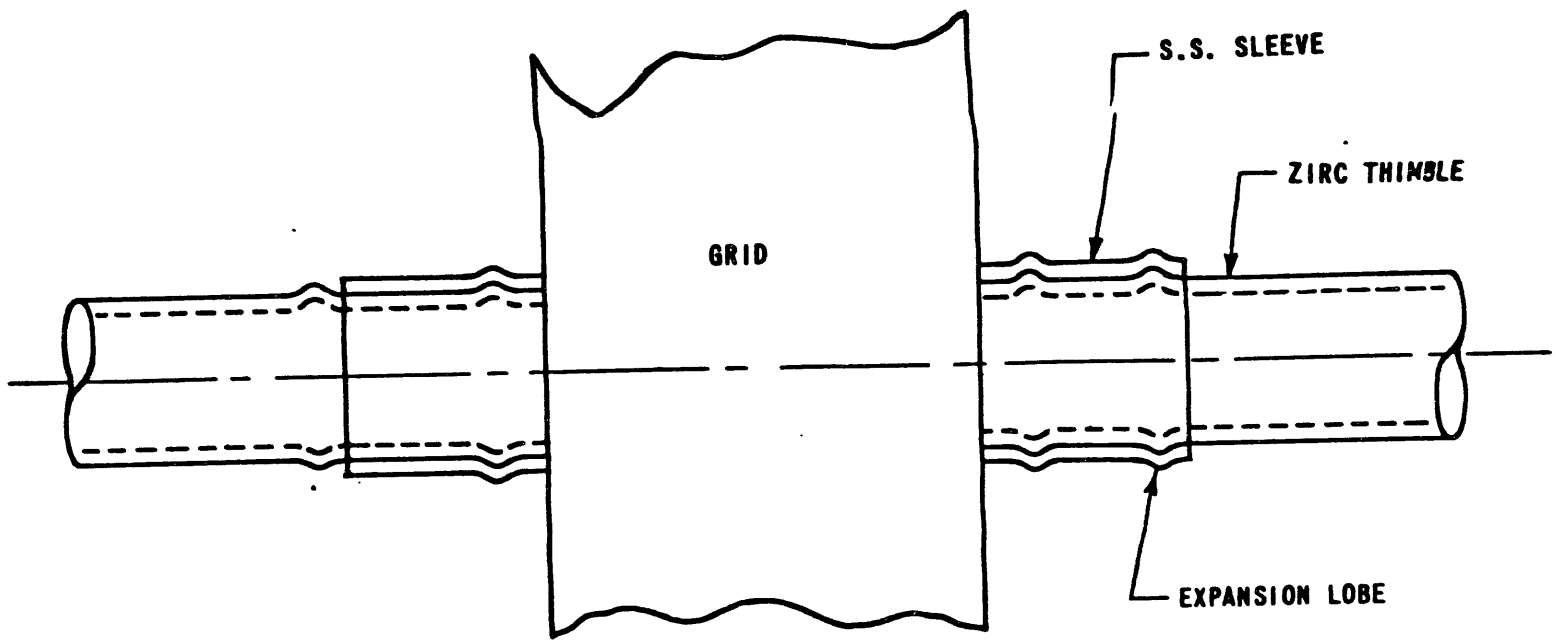

FIGURE A-6. Elevation View

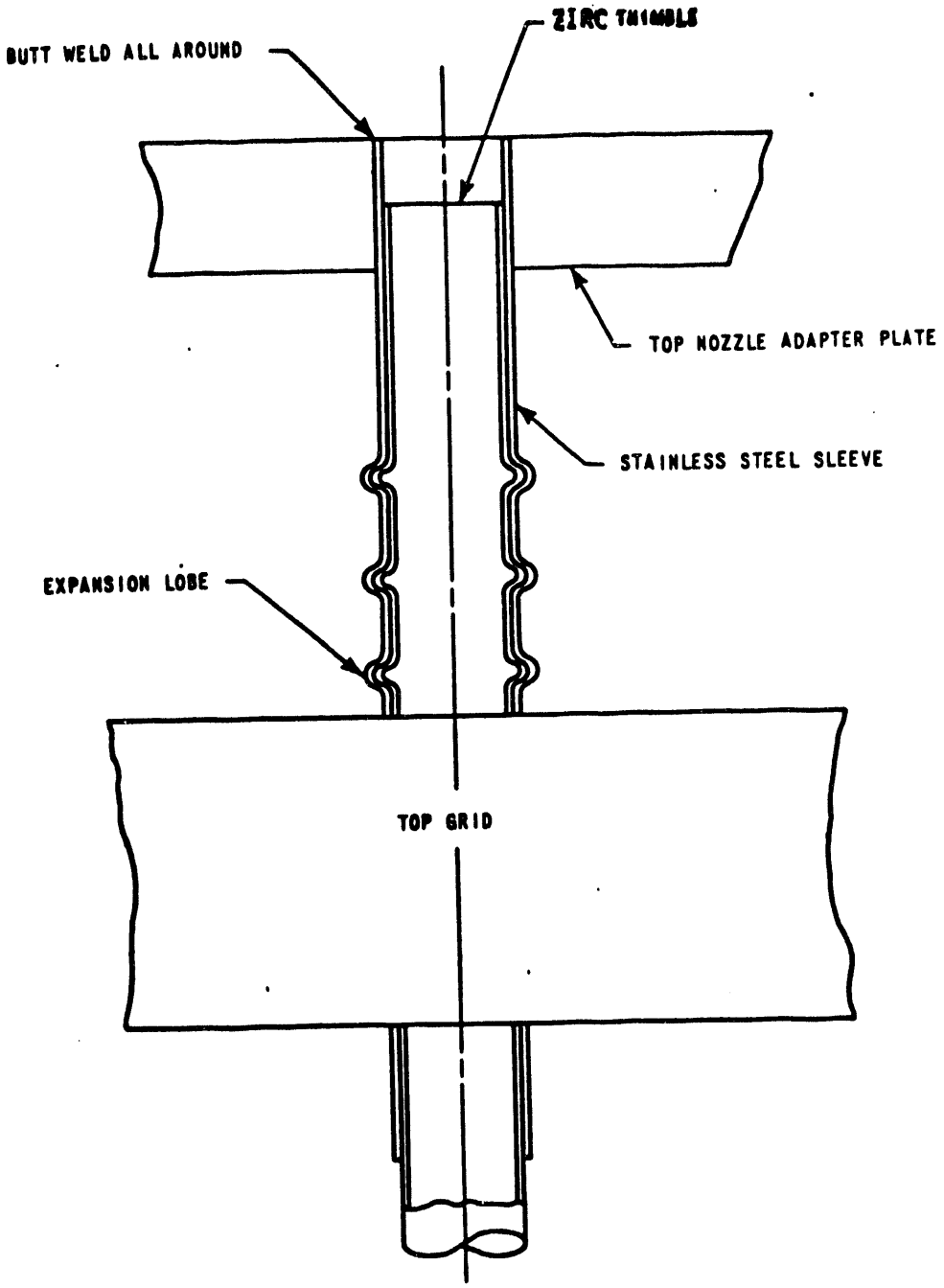

FIGURE A-7. Top Grid Nozzle Attachment

The four-lobed tool forces the thimble and sleeve outward to a predetermined diameter, thus joining the two components.

The top grid is fastened in a similar manner, except that the stainless steel sleeve is designed such that it can be welded to the fuel assembly top nozzle.

The bottom grid assembly is not mechanically fastened as described above but is joined to the assembly (Figure A-8). The stainless steel insert is spot welded to the bottom grid and later captured between the guide thimble end plug and the bottom nozzle by means of a stainless steel thimble screw.

The central instrumentation thimble of each fuel assembly is not attached to either the top or bottom nozzles, but the thimble is constrained by its seating in counterbores of each nozzle.

1.1.2.4 Grid Assemblies

The fuel rods, (Figure A-3), are supported laterally at intervals along their length by grid assemblies. The grid assemblies maintain the lateral spacing between the rods throughout the design life of the assembly. Each fuel rod is afforded lateral support within each grid by the combination of support dimples and springs. The grid assembly consists of individual slotted straps interlocked and brazed in an "egg crate" arrangement to join the straps permanently at their points of intersection. The straps contain spring fingers, support dimples, and mixing vanes. The grid material is *Inconel*-718.

1.2 BWR Fuel Assembly

The BWR fuel assembly (Figure A-9) consists of a fuel bundle and the Zircaloy fuel channel surrounding it. The fuel channel surrounds the fuel bundle and serves three main purposes:

1. Provides a fixed flow path for coolant

2. Serves as a guiding surface for the control elements (cruciform) as shown in Figure A-10

3. Protects the fuel bundle during handling operations.

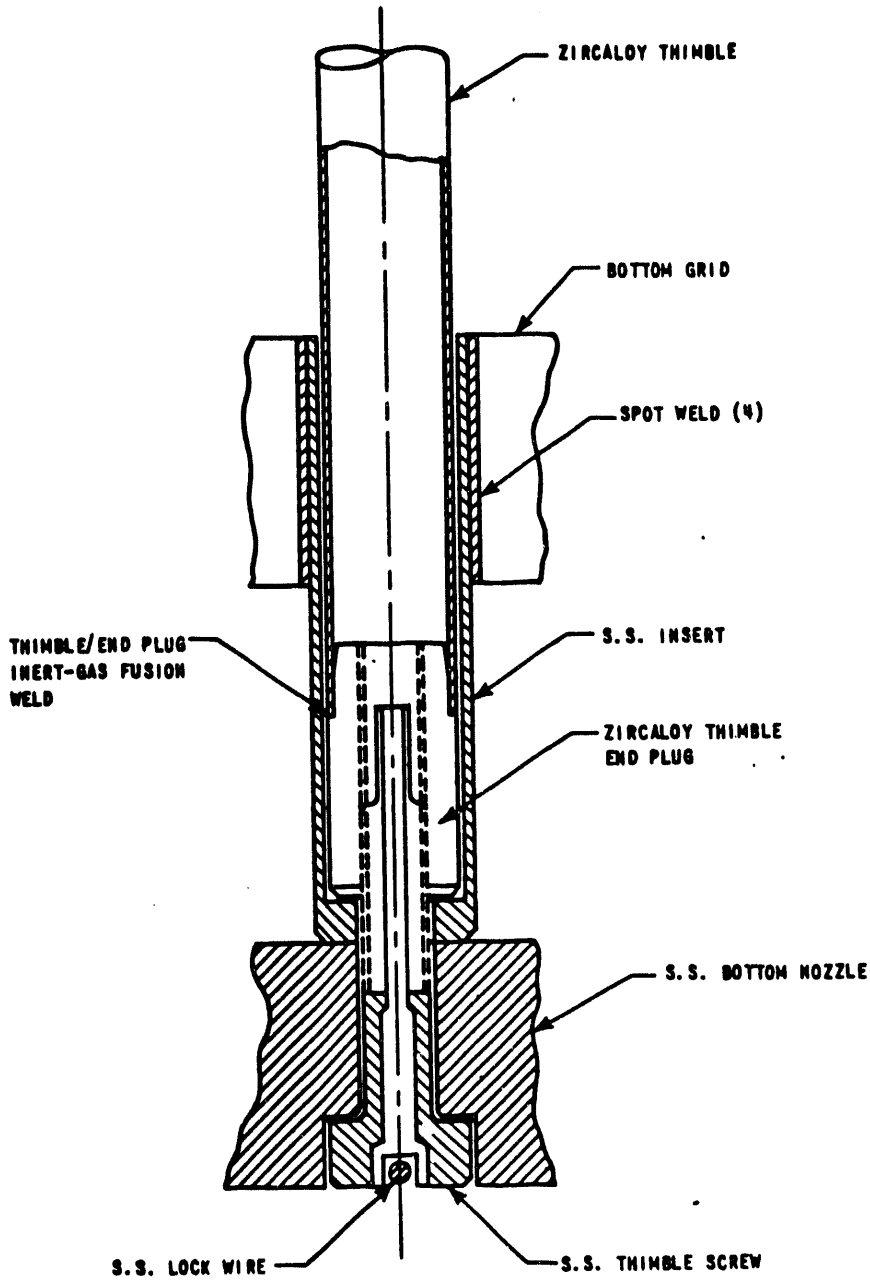

FIGURE A-8. Guide Thimble to Bottom Nozzle Joint

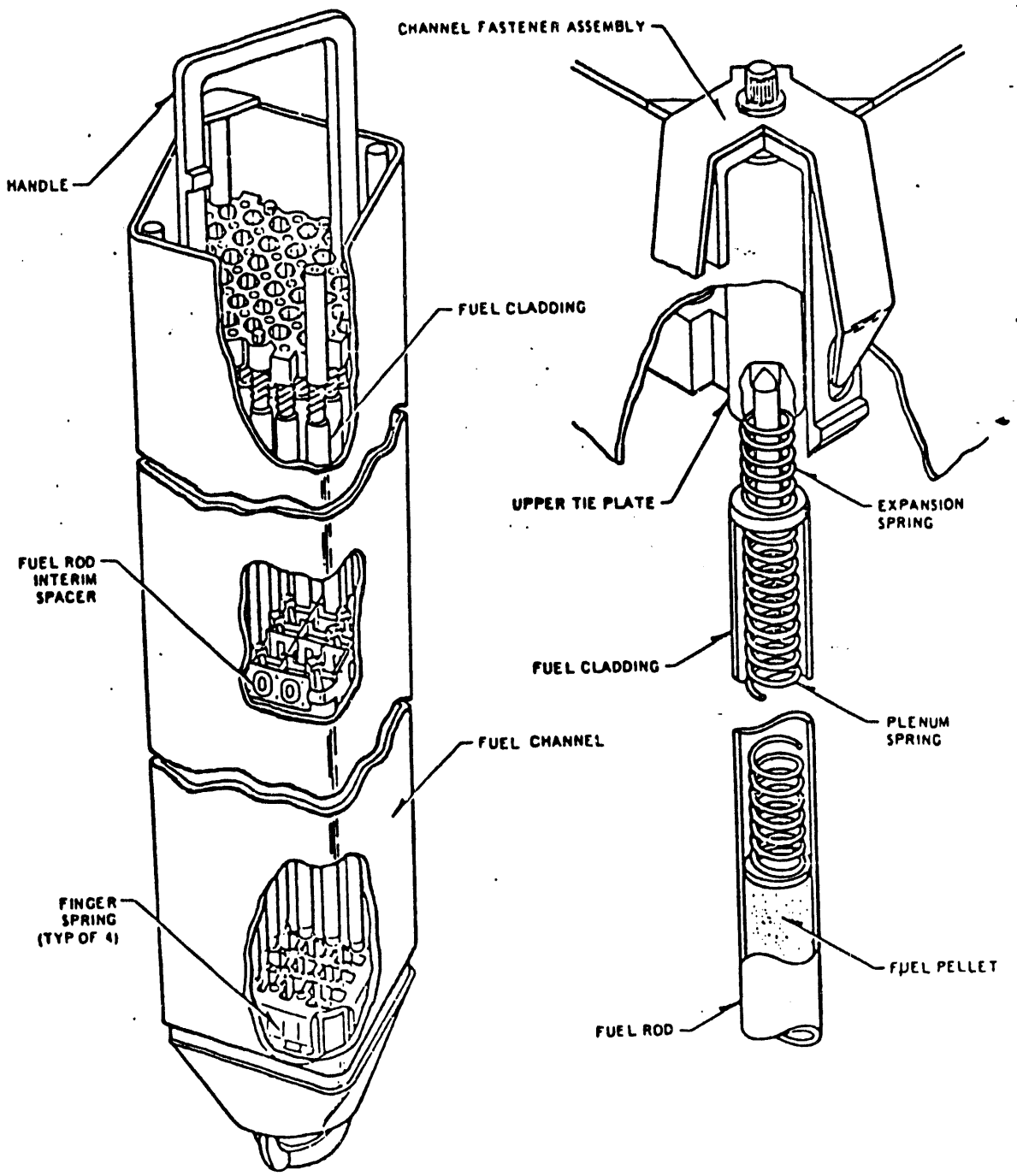

FIGURE A-9. Fuel BWR Assembly

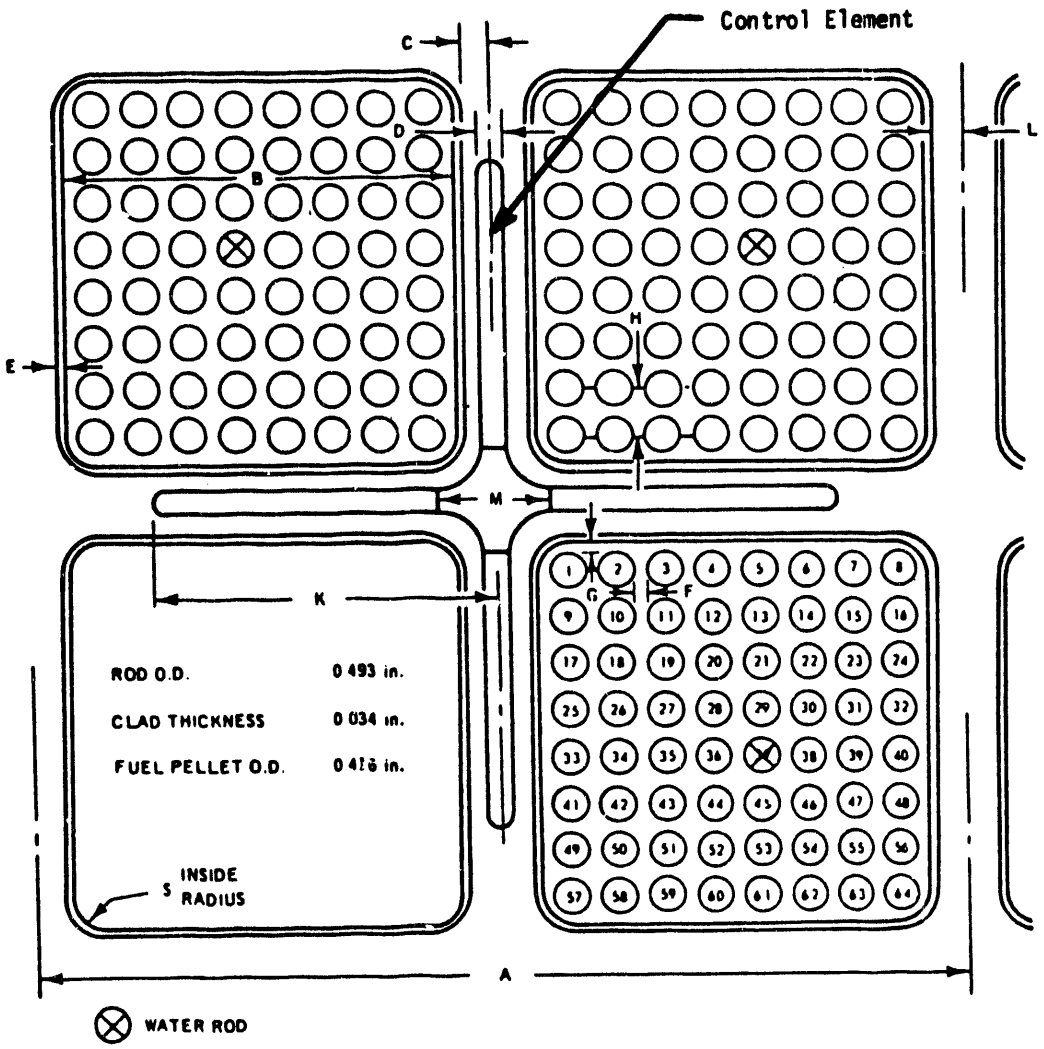

FIGURE A-10. Typical BWR Core Cell

The 8 × 8 fuel bundle contains 63 fuel rods and one spacer-capture water rod which are spaced and supported in a square (8 × 8) array by the upper and lower tie plates (Figure A-11). The lower tie plate has a nosepiece which has the function of supporting the fuel assembly in the reactor. The upper tie plate has a handle for transferring the fuel bundle from one location to another. The identifying assembly serial number is engraved on the top of the handle, and a boss projects from one side of the handle to aid in ensuring proper fuel assembly orientation. Both upper and lower tie plates are fabricated from Type 304 stainless steel casting. Zircaloy-4 fuel rod spacers equipped with *Inconel*-X springs are used to maintain rod-to-rod spacing. A schematic of water rod-spacer positioning arrangement is shown in Figure A-12.

1.2.1 Fuel Rods

Each fuel rod consists of high density (95% Theoretical Density) fuel pellets stacked in a Zircaloy-2 cladding tube which is evacuated, backfilled with helium, and sealed by welding Zircaloy end plugs in each end. The fuel rod cladding thickness is adequate to be "free standing", i.e., capable of withstanding external reactor pressure without collapsing onto the pellets within. Although most fission products are retained within the fuel, a fraction of the gaseous products is released from the pellet and is accumulated in a plenum at the top of the rod. Sufficient plenum volume is provided to prevent excessive internal pressure from these fission gases of from other gases liberated over the design life of the fuel. A plenum spring, or retainer, is provided in the plenum space to prevent movement of the fuel column inside the fuel rod during operation.

1.2.2 Fuel Bundle Structure

Three types of rods are used in a typical fuel bundle: tie rods, a water rod, and standard rods. The eight fueled tie rods in each bundle have threaded end plugs which thread into the lower tie plate casting and extend through the upper tie plate casting. A stainless steel hexagonal nut and locking tab are installed on the upper end plug to hold the assembly together. These tie rods support the weight of the assembly during fuel handling operations only when the assembly hangs by the handle; during operation, the fuel rods are supported by the lower tie plate.

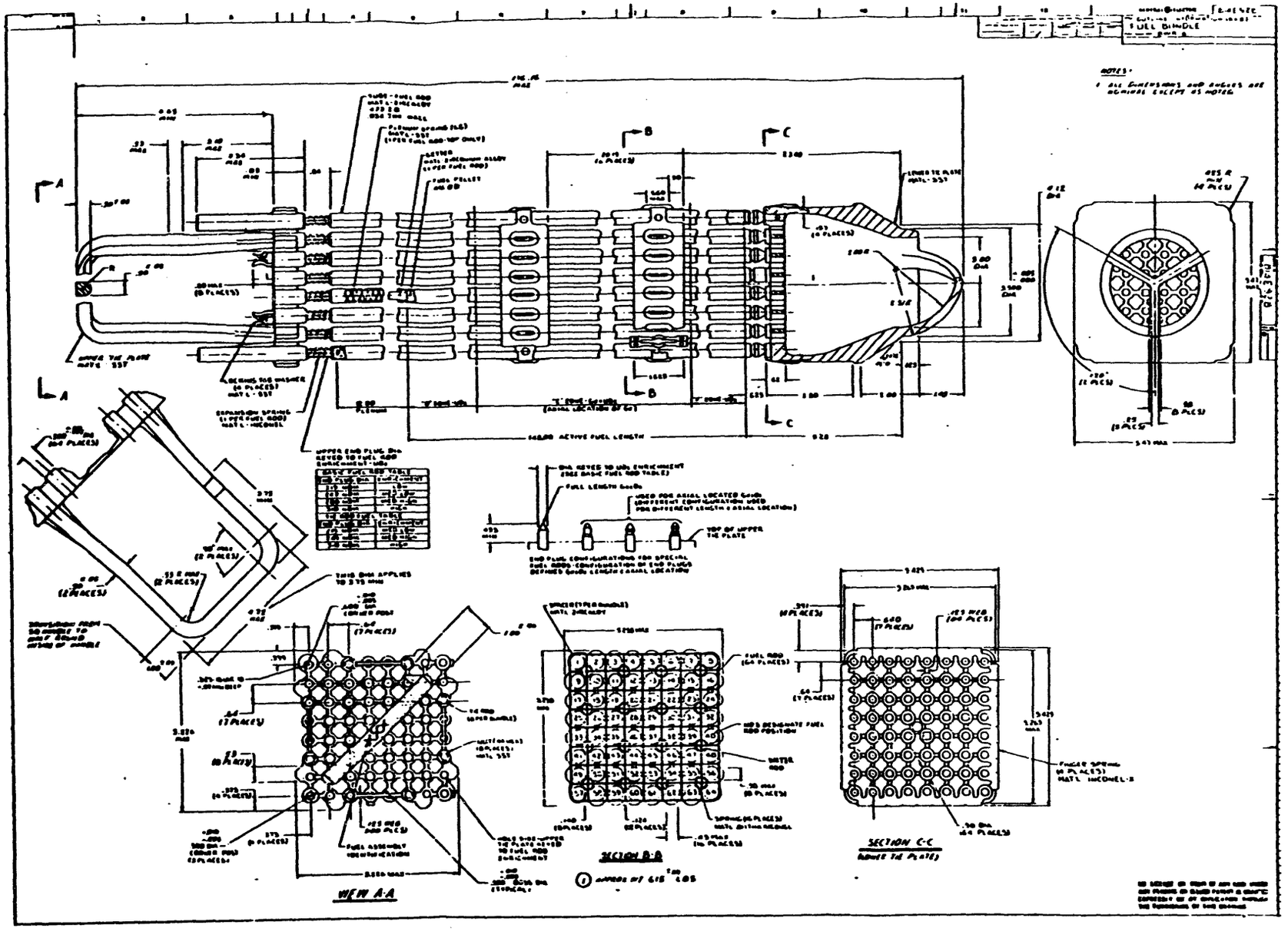

FIGURE A-11. BWR Fuel Bundle

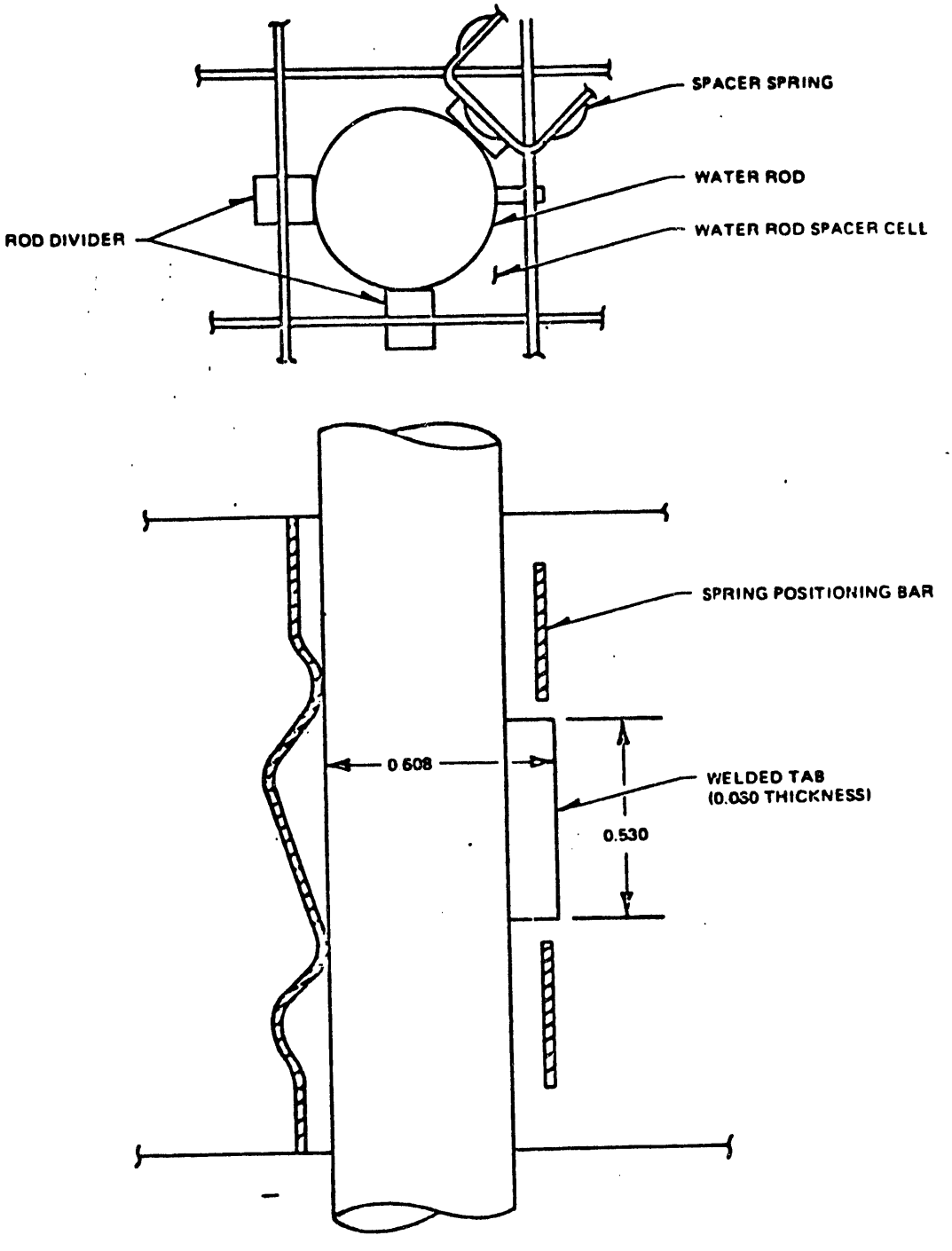

FIGURE A-12. Schematic of Water Rod Spacer Positioning Arrangement

One rod in each fuel bundle (Figure A-11) is a hollow water tube used to position seven Zircaloy-4 fuel rod spacers vertically in the bundle. The water rod is a hollow Zircaloy-2 rod equipped with a square bottom end plug. The water rod is assembled to the spacers by sliding the rod through the spacer cells with the welded tabs oriented in the direction of the corner of the spacer cell. The rod is then rotated so that the tabs fit between the elements of the spacer structure, thereby locking the spacer in the required axial position. The rod is prevented from rotating to unlock the spacers by the engagement of its (square) lower end plug with the tie plate hole. Several holes are drilled around the circumference of the water rod at each end to allow coolant water to flow through the rod. Three holes with a diameter of 0.089 inch are located at the bottom of the water rod, and eight holes with a diameter of 0.188 inch are located at the top.

The remaining 55 rods in a bundle are standard rods with the same active fuel length as the tie rods. The end plugs of the standard rods have pins which fit into anchor holes in the tie plates. An *Inconel*-X expansion spring over the top end plug pin of each fuel rod keeps the fuel rods seated in the lower tie plate and allows them to expand axially and independently by sliding within the holes of the upper tie plate.

APPENDIX B

A TYPICAL QA/QC PROGRAM FOR THE OPERATION OF A LARGE-SCALE MIXED OXIDE FUEL FABRICATION

PRELIMINARY REPORT

PREPARED BY
J. V. Denero
16 MAY 1977

PREPARED FOR THE
ENERGY RESEARCH AND DEVELOPMENT ADMINISTRATION
SAVANNAH RIVER OPERATIONS OFFICE
UNDER
CONTRACT EY-77-C-09-0945, REV. 1, TASK 4 EXTENSION

APPROVED: _____
R. F. Duda
Engineering Manager
ERDA Programs Management

APPROVED: _____
E. R. Rubbo, Manager
Integrated Fuel Reprocessing Complex

WESTINGHOUSE ELECTRIC CORPORATION
NUCLEAR FUEL DIVISION
P.O. BOX 355
PITTSBURGH, PA. 15230

1 INTRODUCTION

1.1 Preliminary Quality Assurance Criteria

The manufacture of mixed-oxide fuel must conform to the criteria established in 10CFR50 Appendix B, "Quality Assurance Criteria for Nuclear Power Plants and Fuel Reprocessing Plants".

The scope of Appendix B ranges from the planning, designing, construction and operation of a total nuclear power plant to the design, procurement, testing, and operation of basic materials and components of construction and operation. Therefore, an explanation of how and why Appendix B applies to the operation of a fuel fabrication plant and the manufacture of nuclear fuel and components is warranted.

Appendix B to 10CFR Part 50, comprised of 18 criteria, establishes by law the quality assurance requirements for the design, construction and operation of nuclear power plant safety related structures, systems and components and applies directly to the nuclear power plant owners.

The most often used practice by nuclear power plant owners is to delegate the establishment and execution of the required Quality Assurance Programs to others such as reactor designers, fuel fabricators, etc. However, the total responsibility for complying with Appendix B remains with the plant owners. For example, nuclear power plant owners ordering fuel could impose all eighteen criteria on the fuel vendors. Should the plant owner order fuel of a specific design, then the fuel fabricator would be released from complying with Criteria III and XII of Appendix B - Design Control and Test Control. In this case, the responsibility for Design and Test Control would remain with the utility unless delegated elsewhere. The same would apply to any of the Appendix B criteria; i.e., Procurement Control, Quality Assurance Records, Control of Special Process, etc.

For the purposes of this report, a suggested assignment of the various criteria of Appendix B to various participants in the mixed oxide fuel cycle is shown in Table B-1.

The criteria in Table B-1 assigned to the fabricator of mixed oxide fuel form the basis for the QA/QC Program described herein.

This report presents a description and provides examples of a typical QA/QC Program required to comply with criteria of Appendix B assigned to fuel fabrication plant as indicated in Table B-1.

TABLE B-1

10CFR50 Appendix B	Quality Assurance Criterion	*Comments*
I	ORGANIZATION - the definition of functional responsibilities, levels of authority, lines of communication, and individuals performing activities affecting quality, safety, and performance.	• Applies to Fuel Fabrication Plant. • Method of complying would be detailed in a Quality Assurance Program described briefly in Section 2 of this report and shown in Figure 1.
II	QUALITY ASSURANCE PROGRAM - all those planned and systematic actions necessary to provide confidence that the structure, system, or component will perform satisfactorily in service and that contain provisions which assure identification and compliance with requirements of pertinent recognized and appropriate codes, standards, requirements, and practices.	• Applies to Fuel Fabrication Plant. • Method of complying would be detailed in a Quality Assurance Program described briefly in Section 2 of this report and shown in Figure 2.
III	DESIGN CONTROL - the development, implementation, and documentation of measures which assure that regulatory, SAR, design bases, and related safety code requirements are correctly translated to specifications, designs, procedures, and instructions, and which assure control of deviations from specified quality requirements and standards; and which assure the identification and control of design interfaces and design interface documents; and which assure verification or checking the adequacy of design; and which assure control of design changes including field changes commensurate with control measures applied to the original design.	• This criterion not applicable to the activities assigned to Fuel Fabrication Plant. • Specific assignments and responsibilities relative to design control would be detailed in contractual documents by a fuel designer such as Westinghouse.

TABLE B-1 (Contd)

10CFR50 Appendix B	Quality Assurance Criterion	*Comments*
IV	PROCUREMENT DOCUMENT CONTROL - controls which assure that applicable requirements are included or referenced in procurement documents and provisions made in such documents in reference supplier quality assurance programs, basic technical requirements, source inspections and audits, documentation requirements, and lower-tier procurement control consistent with regulatory requirements.	• Applies to Fuel Fabrication Plant. • Procurement Document Control would be detailed in Manufacture Procedures in the Manufacturing Manual and Quality Control Procedures in the Quality Control Manual as described briefly in Section 2.2. See Figures 2 and 5. • Items pertinent to this criteria purchased by Fuel Fabrication Plant include items directly related to product but not supplied by the customer, i.e., sintering gas, rod pressurizing gas, molybdenum boats, weld wire, brazing alloys. etc. This should not be confused with materials and components supplied by customer, i.e., tubing, end plugs, grids, nozzles, UO_2, for which an overcheck inspection program would be developed.
V	INSTRUCTIONS, PROCEDURES, AND DRAWINGS - requires that activities affecting quality are to be accomplished in accordance with documented policies, procedures, and drawings that include appropriate acceptance criteria for determining that important activities have been satisfactorily accomplished.	• Applies to Fuel Fabrication Plant. • Methods of complying with this criterion are described in detail in procedures contained in: Quality Assurance Manual Manufacturing Manual Engineering Manual Quality Control Manual Project Manual See Figures 2 through 5c.
VI	DOCUMENT CONTROL - the development and documentation of measures to assure that the issuance, review, change, release, distribution, and availability of documents is controlled for accuracy and adequacy to regulatory requirements and approved for use by authorized personnel. This includes instructions, procedures, specifications, drawing, or related written or pictorial presentations which represent or support a design or its adequacy.	• Applies to Fuel Fabrication Plant. • Methods of complying with this criterion are described in detail in procedures contained in: Quality Assurance Manual Manufacturing Manual Engineering Manual Quality Control Manual Project Manual See Figures 2 through 5c.

TABLE B-1 (Contd)

10CFR50 Appendix B	Quality Assurance Criterion	*Comments*
VII	CONTROL OF PURCHASED MATERIAL, EQUIPMENT, AND SERVICES - measures that assure and provide documentation that purchased materials, equipment, and services - whether purchased directly or indirectly - conform to requirements in procurement documents. Source evaluation, selection, evidence of quality, inspection and audits, and examination upon delivery are measures to be applied to accomplish this control.	• This criterion not fully applicable to Fuel Fabrication Plant. • Nuclear Plant Owners have the responsibility of sending to Fuel Fabrication Plant certified materials and components. • However, a planned overcheck inspection program would be implemented by Fuel Fabrication Plant. • Items pertinent to this criteria purchased by Fuel Fabrication Plant include items directly related to product but not supplied by the customer, i.e., sintering gas, rod pressurizing gas, molybdenum boats, weld wire, brazing alloys etc. This should not be confused with materials and components supplied by customer, i.e., tubing, end plugs, grids, nozzles, UO_2, for which an overcheck inspection program would be developed.
VIII	IDENTIFICATION AND CONTROL OF MATERIALS, PARTS, AND COMPONENTS - measures and documentation that provide assurance that physical identification of an item is maintained by heat number, part number, serial number, or other appropriate means either on the item or on records traceable to the item throughout fabrication, erection, installation, and use. These controls are to be designed to prevent the use of incorrect or defective materials, parts, or components.	• Applies to Fuel Fabrication Plant. • Methods of complying would be detailed in Manufacturing Procedures and QC Procedures describing the identification system and traceability system that would be used in Fuel Fabrication Plant. See Figure 3 and C-8 of Figure 5.
IX	CONTROL OF SPECIAL PROCESSES - measures and documentation that provide assurance that special processes are accomplished under controlled conditions in accordance with applicable codes, standards, specifications, and the like through use of qualified personnel, procedures, and equipment.	• Applies to Fuel Fabrication Plant. • Methods of complying would be detailed in Manufacturing Procedures; i.e., Process Outlines, Operating Procedures, Qualification of Manufacturing Process, etc. See Figure 3 and Quality Control Procedure shown in Figure 5.

TABLE B-1 (Contd)

10CFR50 Appendix B	Quality Assurance Criterion	*Comments*
X	INSPECTION - an inspection program to verify that activities affecting quality, safety, and performance are accomplished in conformance with documented instructions, procedures, drawings, etc., and that design requirements are satisfied.	• Applies to Fuel Fabrication Plant. • Described completely in Quality Control Manual and Quality Control Procedures. See C-10 of Figures 5 and 5b.
XI	TEST CONTROL - the establishment of a test program to assure that all testing required to demonstrate that the item will perform satisfactorily in service is identified and documented, and that the testing is performed in accordance with written test procedures incorporating the requirements and limits contained in applicable design documents, and that they are appropriately applied and documented.	• This Criterion not applicable to Fuel Fabrication Plant.
XII	CONTROL OF MEASURING AND TEST EQUIPMENT - the establishment of measures and documentation that provide assurance that tools, gages, instruments, and other measuring and testing devices used to control activities affecting quality, safety, and performance are identified, controlled, calibrated, and adjusted at specified intervals to maintain the accuracy necessary for their application.	• Applies to Fuel Fabrication Plant. • Methods of complying would be described in Quality Control Procedures. See C-12 of Figures 5 and 5c.
XIII	HANDLING, STORAGE, AND SHIPPING - documented measures to control all elements of handling, storage, shipping, and preservation of materials and equipment necessary to prevent damage, malfunction, and deterioration of safety-related materials and equipment.	• Applies in part to Fuel Fabrication Plant. • Procedures describing handling and storage in Fuel Fabrication Plant would be the responsibility of the Fuel Fabrication Plant and detailed in Manufacture Procedures and Instructions. See Figure 3. However, shipping of fuel, receiving inspection and storage at the reactor site would be the responsibilities of the nuclear plant owners.

TABLE B-1 (Contd)

10CFR50 Appendix B	Quality Assurance Criterion	*Comments*
XIV	INSPECTION, TEST, AND OPERATING STATUS - control measures, marking and documentation that provide assurance that required inspections and tests are performed and that the acceptability of each item to required inspection and tests is known, documented and traceable throughout the manufacturing, installation and operating cycle.	• Applies to Fuel Fabrication Plant. • Methods to comply would be described in Quality Control Manual, Manufacturing Manual and sub-tier procedures. See Figures 3 and 5.
XV	NONCONFORMING MATERIAL, PARTS, OR COMPONENTS - measures and documentation that identify and control materials, parts, and components which do not conform to requirements to prevent inadvertent installation or use.	• Applies to Fuel Fabrication Plant. • Methods to comply would be detailed in Manufacturing Manual Procedures, Quality Control Manual Procedures, Engineering Manual Procedures and Project Manual Procedures. See Figures 3, 4, 4d, 4e, 4f and 5.
XVI	CORRECTIVE ACTION - measures and documentation that provide assurance that conditions adverse to quality are promptly identified and corrected. Included are measures to assure that significant conditions adverse to quality, safety, and performance are determined, actions taken to preclude repetition, and documented by appropriate management levels.	• Applies to Fuel Fabrication Plant. • Methods to comply would be detailed in Manufacturing Manual Procedures, Quality Control Manual Procedures, Engineering Manual Procedures and Project Manual Procedures. See Figures 3, 4, 4d, 4e, 4f and 5.
XVII	QUALITY ASSURANCE RECORDS - a records management system that provides assurance that documentary evidence (records) of the quality, safety, and performance of safety-related structures, systems, and components and of activities affecting their quality are prepared and maintained as work is performed. These records are to be identifiable and retrievable in accordance with records retention guidelines defining duration of retention, responsibility, and location.	• Applies to Fuel Fabrication Plant. • Method to comply would be described in Quality Control Manual Procedures. See C-17 of Figure 5.

TABLE B-1 (contd)

10CFR50 Appendix B	Quality Assurance Criterion	*Comments*
XVIII	AUDITS - A comprehensive, planned, and documented system for assuring verification of compliance with all aspects of the quality assurance program and to establish the effectiveness of that program. Such audits are to be conducted in accordance with procedures and check lists by trained personnel not having direct responsibility for the area indicated, documented and reviewed by responsible management, and followed to assure necessary action.	• Applies to Fuel Fabrication Plant. • Methods to comply would be described in Product Assurance Manual and Quality Control Manual Procedures. See Figure 2 and C-18 of Figure 5.

To summarize briefly, a Quality Assurance Program responsive to all eighteen criteria of Appendix B must be developed and implemented for the design, manufacture and use of mixed oxide fuel for nuclear power plants. While many of the eighteen criteria are delegated to the Fuel Fabrication Plant, the following responsibilities could remain with the nuclear power plant owners or delegated elsewhere:

a. The design of fuel rods and assemblies.

b. Procurement testing and certification of materials and components supplies to Fuel Fabrication Plant. (over inspection would be performed by Fuel Fabrication Plants).

c. Handling and shipping of fuel assemblies after release by Fuel Fabrication Plant.

d. Receiving, storage and installation of assemblies at the reactor site.

The QA Program, approved by upper management, defines all activities necessary to assure that the fuel rods and assemblies manufactured meet the requirements established by the customer's drawings and product specifications. (The requirement to comply to 10CFR50 Appendix B will be specified in the customer's procurement documents.) This QA Program applies to the manufacturing, inspection and auditing activities.

This program commits all groups within the Fuel Fabrication Plant to comply with the requirements of 10CFR50 Appendix B and to follow the guidance provided by NRC and ERDA in applicable guides, standards and regulations.

1.2 QA Program for Mixed Oxide Fuel Fabrication Plant

The QA Program Plant will consist of eighteen sections. Each section defining how the Fuel Fabrication Plant intends to comply with each Criterion of Appendix B. See Table B-2 for typical example of a table of contents for a suggested QA program.

1.2.1 Functional Departments

The QA plan also defines the responsibility of the Fuel Fabrication Plant. See Figure B-1. The basic organization relative to the QA/QC program consists of four functional departments reporting to a "Works Manager." The QA Program is implemented by departmental manuals for each of the four functional groups. The basic responsibilities of the departments are as follows:

TABLE B-2

Table of Contents of Quality Assurance Program

Section	*Title*
1	QUALITY ASSURANCE PROGRAM PLAN
2	ORGANIZATION AND RESPONSIBILITIES
	2.1 Product Assurance Department
	2.2 Projects Department
	2.3 Engineering Department
	2.4 Manufacturing
	2.5 Responsibility Interfaces
3	DESIGN CONTROL
	3.1 Configuration Control
	3.2 Change Control
4	PROCUREMENT DOCUMENT CONTROL
5	INSTRUCTIONS, PROCEDURES, AND DRAWINGS
	5.1 Customer
	5.2 Product Assurance
	5.3 Quality Control
	5.4 Projects
	5.5 Engineering
	5.6 Manufacturing
	5.7 Fuel Fabrication Plant Management
6	DOCUMENT CONTROL
7	CONTROL OF MATERIALS, EQUIPMENT, AND SERVICES
8	IDENTIFICATION AND CONTROL OF MATERIALS, PARTS, AND COMPONENTS
9	CONTROL OF SPECIAL PROCESSES
	9.1 Receipt of Material and Parts
	9.2 Control of NFD Manufacturing Process
	9.3 Nondestructive Testing
10	INSPECTION
11	TEST CONTROL

TABLE B-2 (Contd)

Section	*Title*
12	CONTROL OF MEASURING AND TEST EQUIPMENT
	12.1 Serialization
	12.2 Calibration
	12.3 Auditing of Tool and Gage Records
13	HANDLING, STORAGE, AND SHIPPING
	13.1 Handling
	13.2 Preservation, Packaging, and Storage
	13.3 Shipping
14	INSPECTION, TEST, AND OPERATING STATUS
15	NONCONFORMING MATERIALS, PARTS, OR COMPONENTS
16	CORRECTIVE ACTION
17	QUALITY ASSURANCE RECORDS
	17.1 Projects
	17.2 Design Engineering
	17.3 Product Assurance
	17.4 Manufacturing
	17.5 Record Storage Facilities
18	AUDITS
	18.1 Product Assurance Audits
	18.2 Departmental Reviews and Audits
	18.3 Fuel Fabrication Plant Management Audits
	18.4 Utility Audits
	18.5 Customer Audits
	18.6 NRC Audits

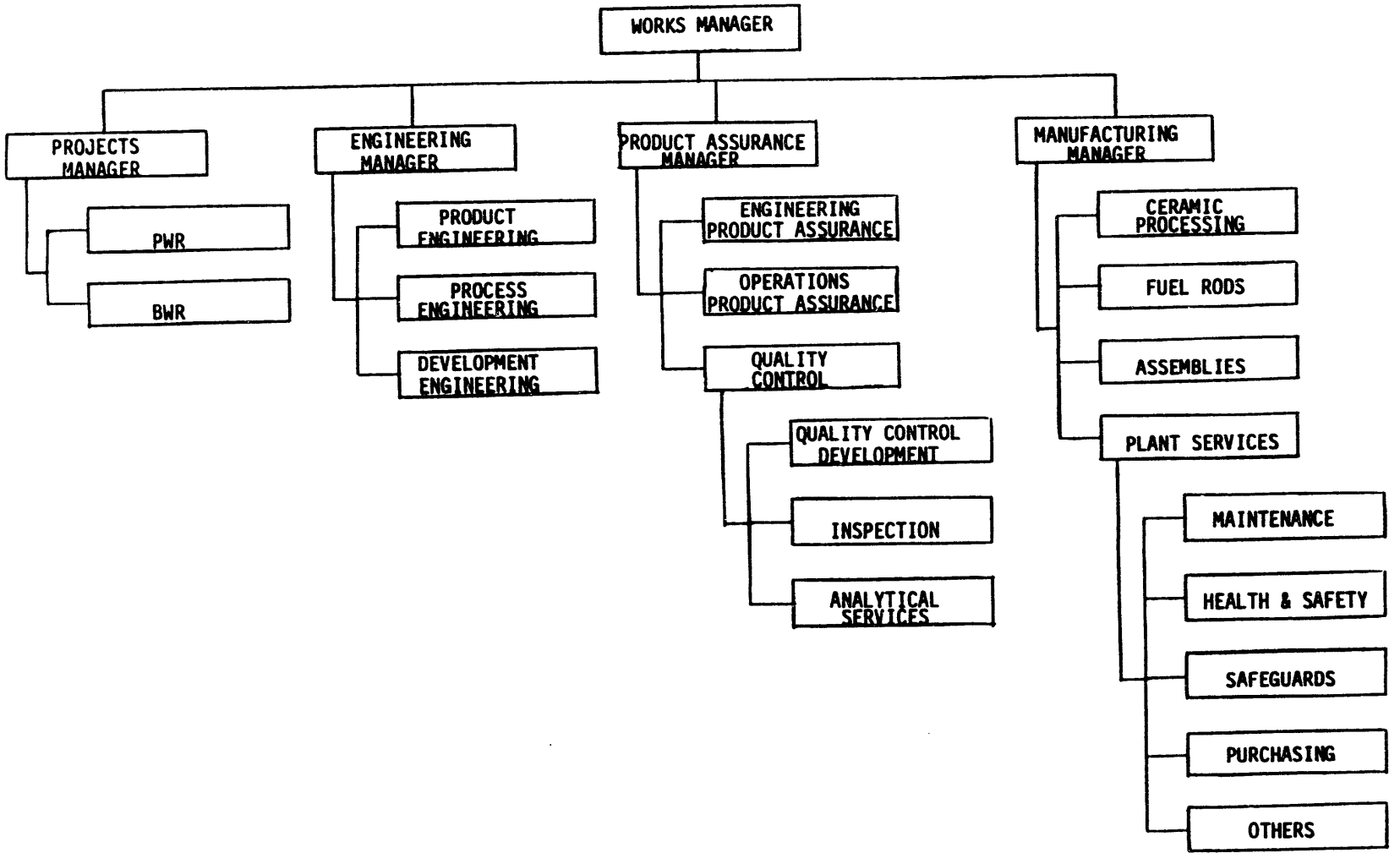

FIGURE B-1. Functional Organization for Mixed Oxide Fuel Fabrication Plant

1.2.2 Product Assurance Department

The Product Assurance Department is responsible for the development and maintenance of the Quality Assurance Program and for the generation of product policies and procedures required to guide the program. Functional departments within Fuel Fabrication Plant prepare procedures required to implement this program. These procedures are reviewed, approved, and audited by Product Assurance.

1.3 Preliminary Fuel Fabrication Plant Criteria for Design Integration Study

The QA/QC Program described in this report is based in part on the following assumptions:

1. Fuel Fabrication Plant will fabricate PWR and BWR mixed oxide fuel assemblies.

2. Fuel Fabrication Plant receives oxide materials, tubing, end plugs, assembly hardware and components certified by the customer. An overcheck inspection program would be implemented by Fuel Fabrication Plant.

3. Fuel Fabrication Plant receives approved drawings, product specifications and bill of materials from the customer.

4. Plant responsibilities include: receiving inspection of incoming materials and components, preparation of process specifications and process outlines, fabrication of fuel pellets, fuel rod loading, fabrication of fuel assemblies, loading assemblies into customer supplied shipping containers and in-process and final inspection of product.

5. The customer is responsible for the assemblies in the shipping container FOB Fuel Fabrication Plant. Customer is responsible for on-site surveillance, unloading the assemblies and installing the assemblies into reactor and/or storage racks.

6. The customer is responsible for approving the Fuel Fabrication Plant QA/QC Program prepared on their behalf and auditing the program for compliance.

7. QA records and archive samples will be maintained by Fuel Fabrication Plant.

2 QA/QC PROGRAM

2.1 Description

The term "quality assurance" as used herein is intended to cover the total plan of systematic actions necessary to provide confidence that all fuel assemblies meet customer requirements. The term "quality control" is intended to encompass the specific phases of the quality assurance effort related to the control and measurement of specified characteristics of materials, structure, components and systems for conformity to predetermined requirements. Responsibility for quality control functions at the Fuel Fabrication Plant lies with the Quality Control Section, within the Product Assurance Department.

The Product Assurance Department is comprised of three groups (1) Engineering Product Assurance, (2) Operations Product Assurance and (3) Quality Control. (A more detailed study of specific problems and requirements of Fuel Fabrication Plant may necessitate additional groups).

Engineering Product Assurance

Engineering Product Assurance has responsibility for review and approval of procedures contained in the Engineering and Projects manuals, and has the lead responsibility for conducting audits of these activities to verify compliance.

Operation Product Assurance

Operations Product Assurance has responsibility for review and approval of procedures contained in the Quality Control and Manufacturing manuals, and has lead responsibility for audits of these departments. Operations Product Assurance is responsible for representing Fuel Fabrication Plant in customer and regulatory audits of the Manufacturing Plant and for recommending and monitoring any resulting follow-up actions.

Quality Control

Quality Control is responsible for review and approval of Fuel Fabrication Plant drawings and specification; for audit, surveillance, and inspection of materials, parts, components, and assemblies for conformity to design specifications: QC has the authority to accept or reject and to place hold or stop-work restrictions on items or processes when warranted.

Quality Control is also responsible for training and qualification of inspection personnel; for participation, with Manufacturing, in the qualification and certification of special processes and personnel; and for certification of end-products as compliant to design and customer requirements.

2.1.1 Engineering Department

The Engineering Department has the technical interface responsibilities with the customer. It is responsible for converting the technical requirements of the customer's drawings and product specifications into Process Specification and to approve Manufacturing Process Outlines, Manufacturing Instructions, Engineering Change Requests and Deviation Requests.

Design and development functions relative to the manufacture of fuel pellets, fuel rods, assemblies are the responsibilities of the Engineering Department.

2.1.2 Manufacturing Department

Manufacturing Department is responsible for the receipt and storage of materials and components, the fabrication of fuel assemblies and packaging of fuel assemblies into shipping containers. All manufacturing activities will be performed in accordance with approved procedures.

2.1.3 Projects Department

The Projects Department has responsibility for the overall administration of customer contracts and for providing information required by the functional departments for each specified contract. Documents which transmit such information as related to product quality are controlled by detailed procedures.

2.1.4 Department Interface Responsibilities

The authority and responsibilities of each functional group are defined in written descriptions and interface documents. Close association and interchange of information betwen the functional groups exist at all levels within Fuel Fabrication Plant. Where responsibilities are shared between the groups, the divisions of responsibility and procedures for information transmittal and approval are formally documented and included in the pertinent operations manuals or in the operational procedures for the groups.

2.2 Quality Assurance Program Implementation Documents

The Quality Assurance Program described in section 2.0 describes in broad terms the total system that must be developed to properly plan and implement the 18 criteria of 10CFR50 Appendix B. Implementation of this Quality Assurance Program is described in procedures contained in the Product Assurance Manual and manuals established by four functional groups. The relationship of QA/QC requirements and implementing documents is shown in Figure B-2 through 5.0. A brief description of each functional department manual follows:

2.2.1 Product Assurance Manual

The Product Assurance Manual describes the organization, systems and procedures established to comply with the requirements set forth in the Quality Assurance Program. This manual will provide documented procedures and guidance to be followed by Product Assurance personnel in conducting the necessary product assurance activities.

This manual describes and provides an orderly and systematic plan for executing product assurance responsibilities and for implementing the requirements of 10CFR50 Appendix B. Specific details of this plan are described in one or more of the following manuals and subtier procedures.

- Manufacturing Manual
- Engineering Manual
- Quality Control Manual
- Projects Manual

2.2.1.1 Manufacturing Manual

The Manufacturing Manual consists of a series of procedures (Manufacturing Procedures-MP's) that describes how the Manufacturing Department implements the various technical- and quality-related requirements of the Quality Control, Engineering, Projects, and Purchasing Departments. These procedures (MP's) describe the initiation, reviews, and approvals required for process outlines and route card which list the steps in progression of materials, parts, sub-assemblies, and assemblies through the various manufacturing and inspection points. These documents identify the sequence of operations, inspection upgrade points and the procedures applicable at each step of the sequence.

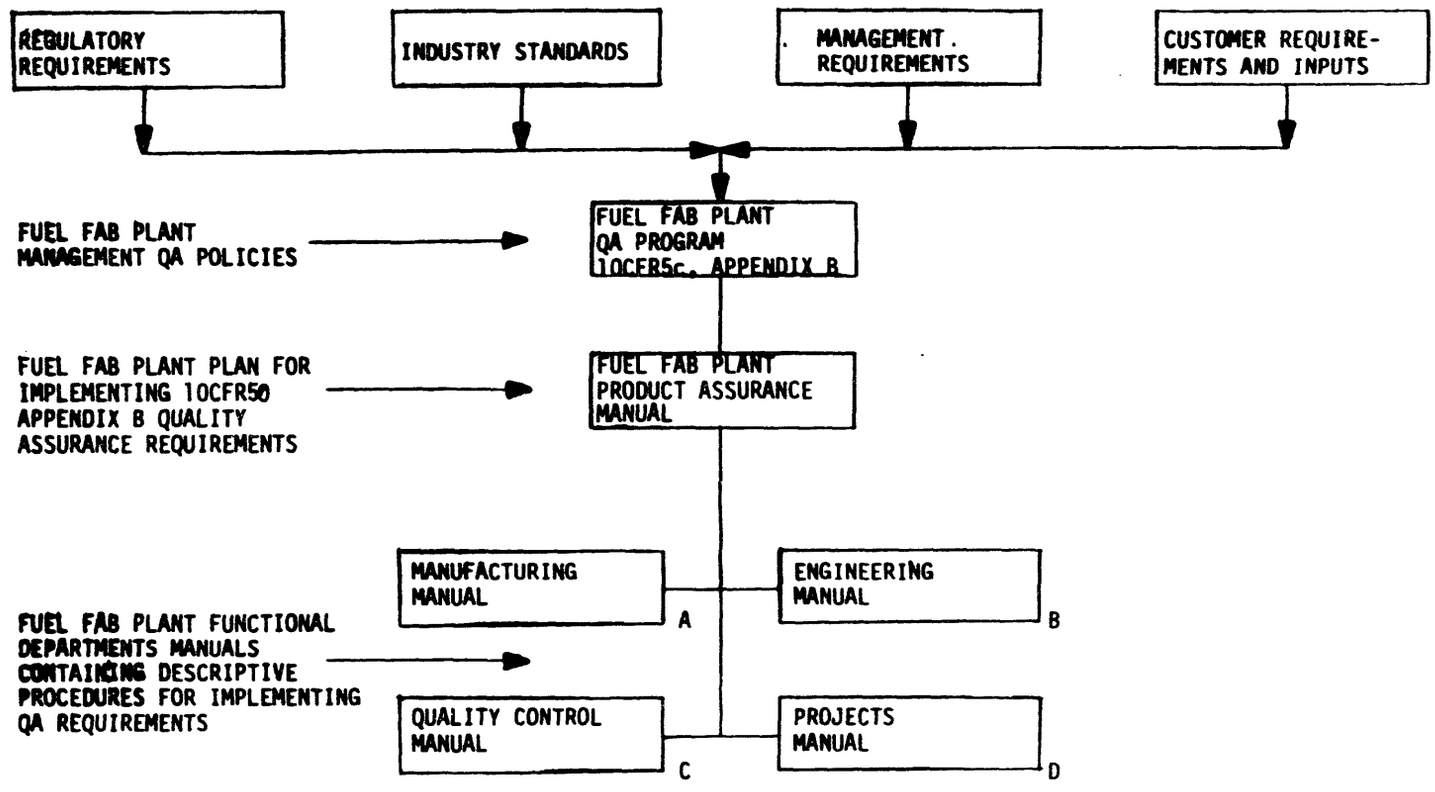

FIGURE B-2. Relationship of QA Requirements and Implementing Documentation

A Flow chart showing the basic procedures and some of the sub-tier procedures included in the Manufacturing Manual is shown in Figure B-3.

2.2.1.2 Engineering Manual

This manual consists of a series of procedures that describes how the Engineering Department implements the review, approval, and control of technical information relative to the design, procurement, manufacture, testing, and packaging of nuclear fuel assemblies. The basic outline of the manual is shown in Figure B-4. Examples of specific procedures required are shown in Figures B-4A through B-4G.

2.2.1.3 Quality Control Manual

The Quality Control Manual consists of a series of procedures (Quality Control Procedures QCP's) which specify the administrative and technical policies to be followed for quality control activities. (Figures B-5 and B-5A through B-5D). Vendor surveillance (option of customer) receiving, in-process, and final inspection of materials, parts, and assemblies are performed in accordance with Quality Control Instruction (QCI's). QCI's define the characteristic, or detail to be inspected, the inspection method. the sampling plan, acceptance limits, and the tools, gages, or test equipment necessary to perform the inspection.

2.2.1.4 Projects Manual

The quality related activities of the Projects Department are governed by procedures in a Projects Manual. These include procedures directing the preparation, review, approval and distribution of documents pertinent to the receipt and dissemination of contractual requirements. The purpose of these procedures is to ensure that the technical and quality requirements of the customer are properly translated into required manufacturing and quality control documents.

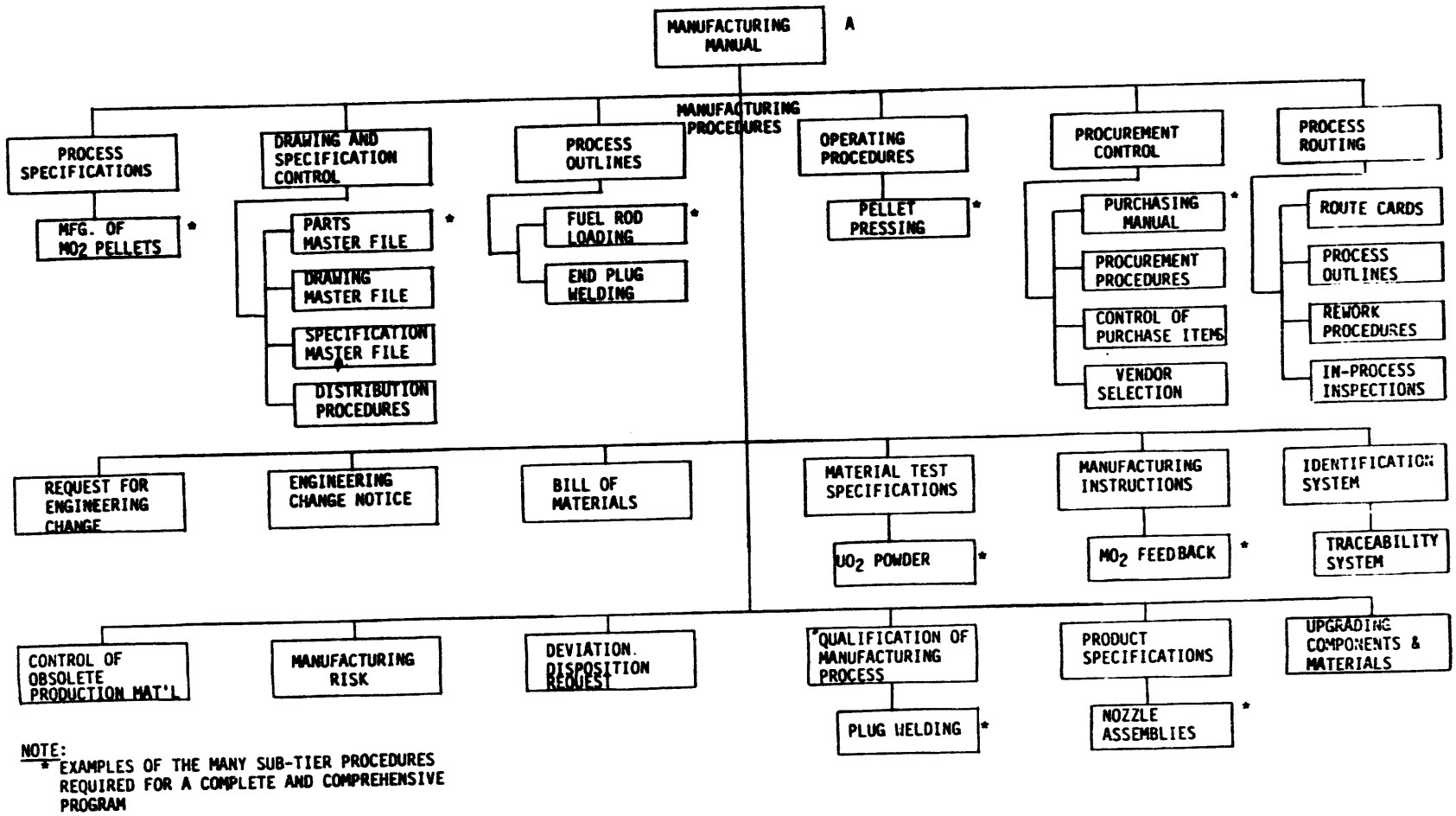

NOTE:
* EXAMPLES OF THE MANY SUB-TIER PROCEDURES REQUIRED FOR A COMPLETE AND COMPREHENSIVE PROGRAM

FIGURE B-3. Manufacturing Procedures and Documents Required for Manufacturing to Comply with Product Assurance Manual

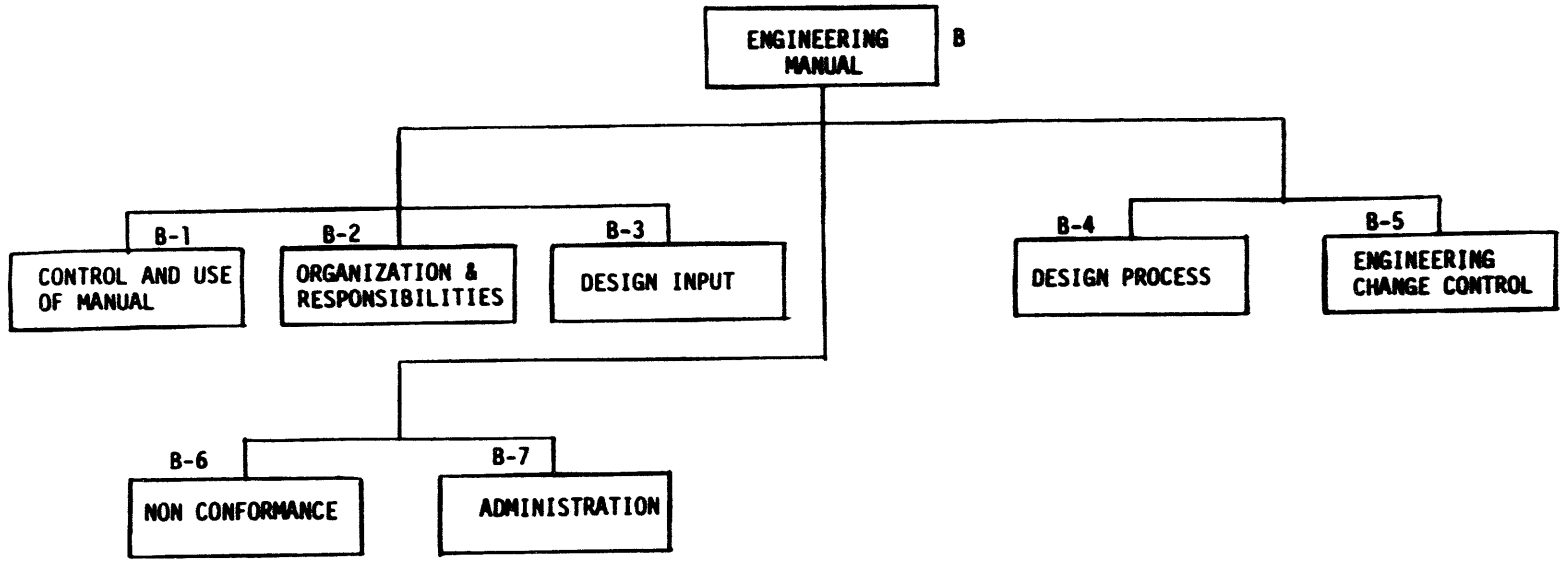

NOTE:
SUB-TIER PROCEDURES REQUIRED TO IMPLEMENT THESE ENGINEERING PROCEDURES ARE SHOWN IN FIGURE 4A THROUGH 4G

FIGURE B-4. Engineering Procedures Required for Engineering Department to Comply with Product Assurance Manual

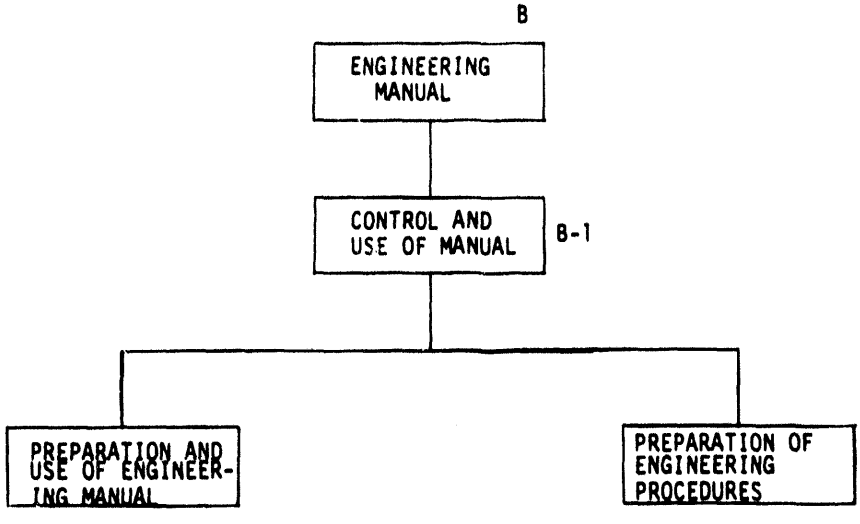

FIGURE B-4A. Subtier Procedures Required to Implement Engineering Manual

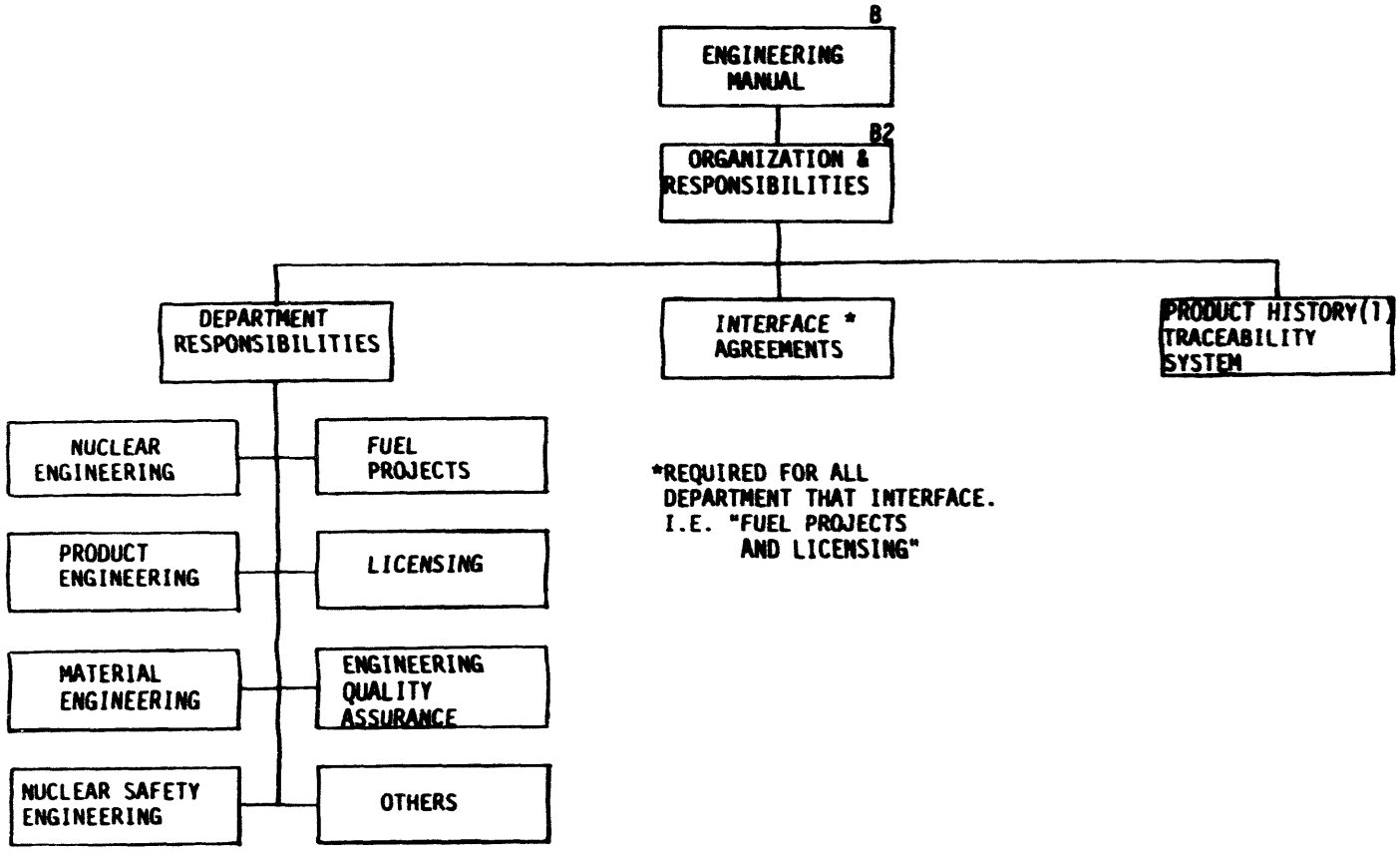

NOTE:
(1) A TRACEABILITY MANUAL AND SYSTEM IS REQUIRED FOR MANUFACTURE OF FUEL. THIS PROCEDURE DESCRIBES HOW TO ACCUMULATE PRODUCT HISTORY INFORMATION FROM THE SYSTEM.

FIGURE B-4B. Subtier Procedures and Documents Required to Implement Engineering Manual

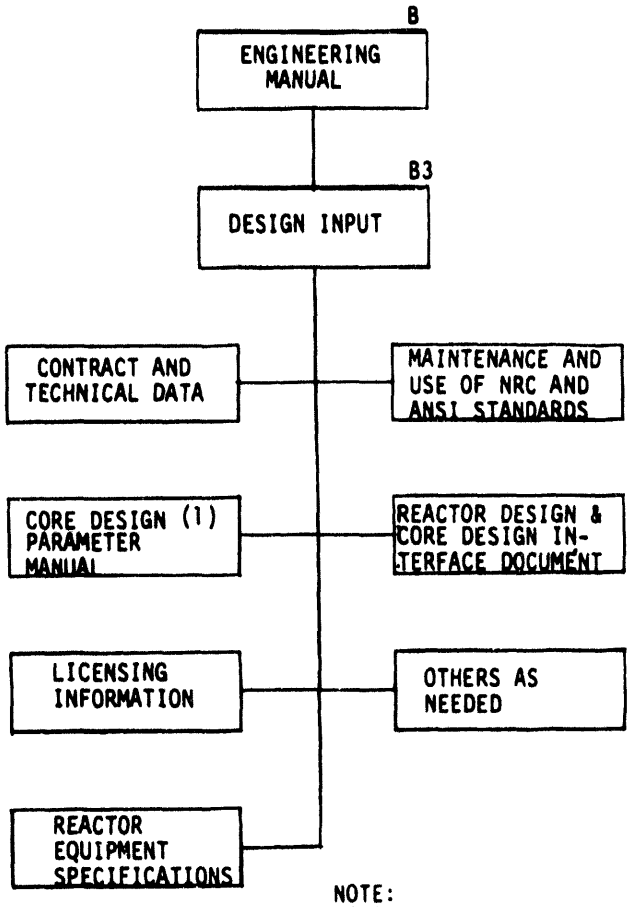

NOTE:
(1) THIS MANUAL WOULD BE SUPPLIED BY REACTOR DESIGNERS. THIS PROCEDURE WOULD DETAIL HOW TO USE THE MANUAL FOR FUEL DESIGN.

FIGURE B-4C. Subtier Procedures and Documents Required to Implement Engineering Manual

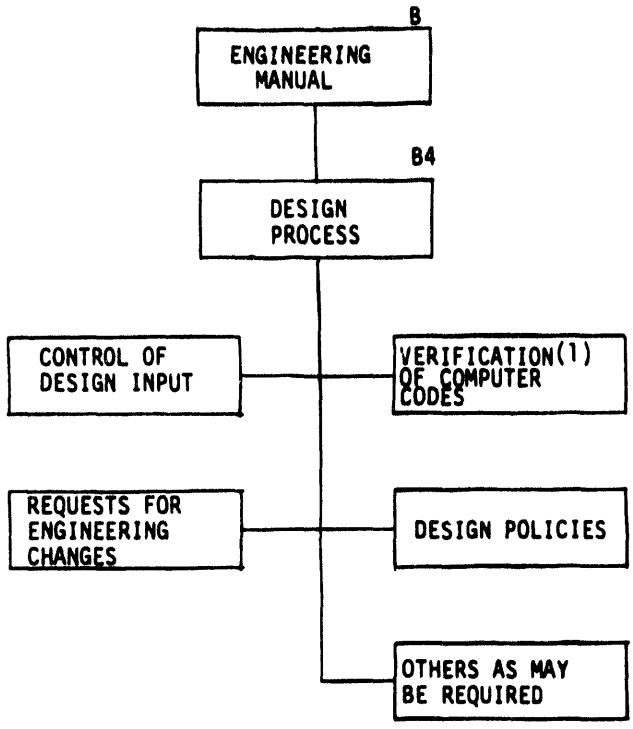

NOTES:
(1) COMPUTER CODES WILL BE DEVELOPED FOR ENGINEER ANALYSIS, DESIGN AND SAFETY ANALYSIS. THIS PROCEDURE DESCRIBES HOW TO VERIFY AND QUALIFY THESE CODES.

FIGURE B-4D. Subtier Procedures and Documents Required to Implement Engineering Manual

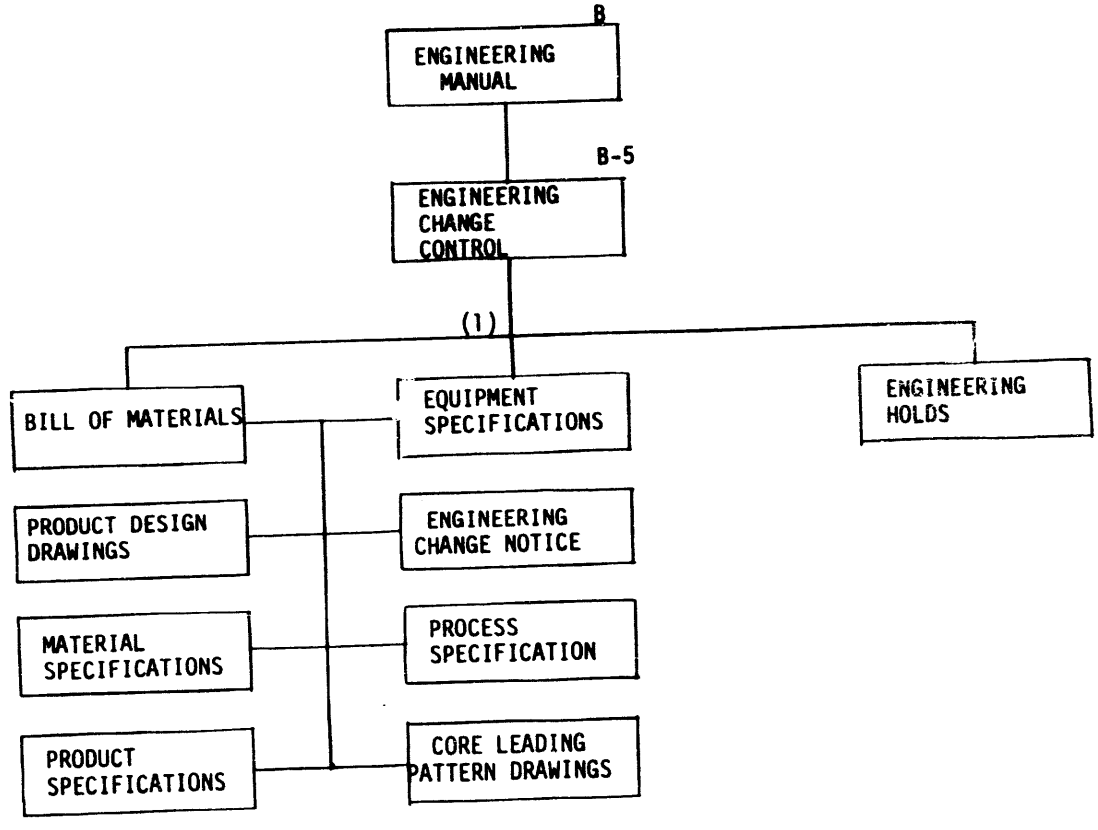

NOTE:

(1) PROCEDURES REQUIRED FOR THE USE AND/OR PREPARATION AND APPROVAL OF THESE EIGHT ITEMS.

FIGURE B-4E. Subtier Procedures and Documents Required to Implement Engineering Manual

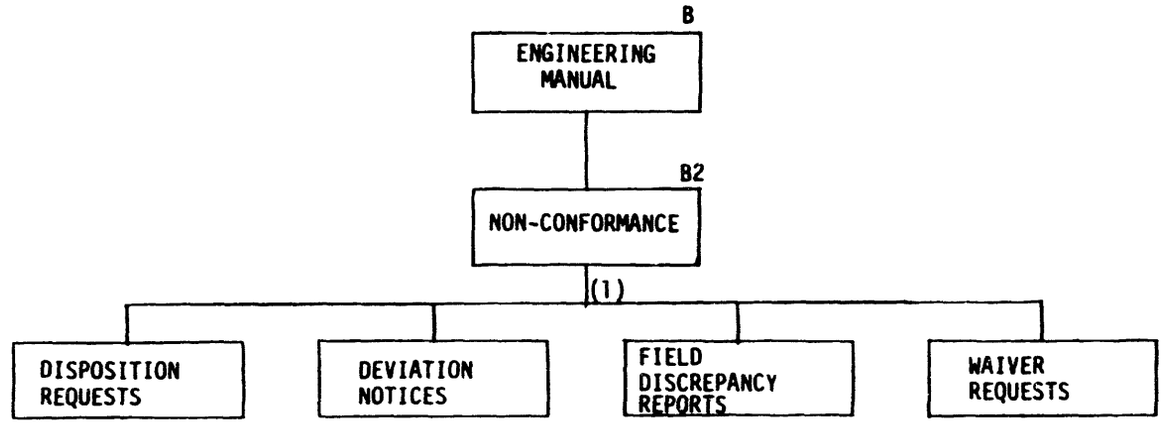

NOTE:
(1) PROCEDURES REQUIRED FOR THE PREPARATION, APPROVAL AND USE OF THESE FOUR ITEMS

FIGURE B-4F. Subtier Procedures and Documents Required to Implement Engineering Manual

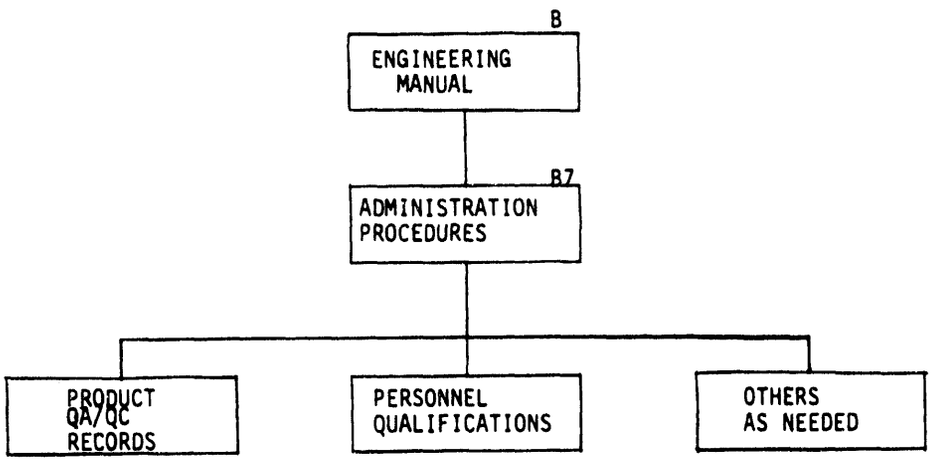

FIGURE B-4G. Subtier Procedures and Documents Required to Implement Engineering Manual

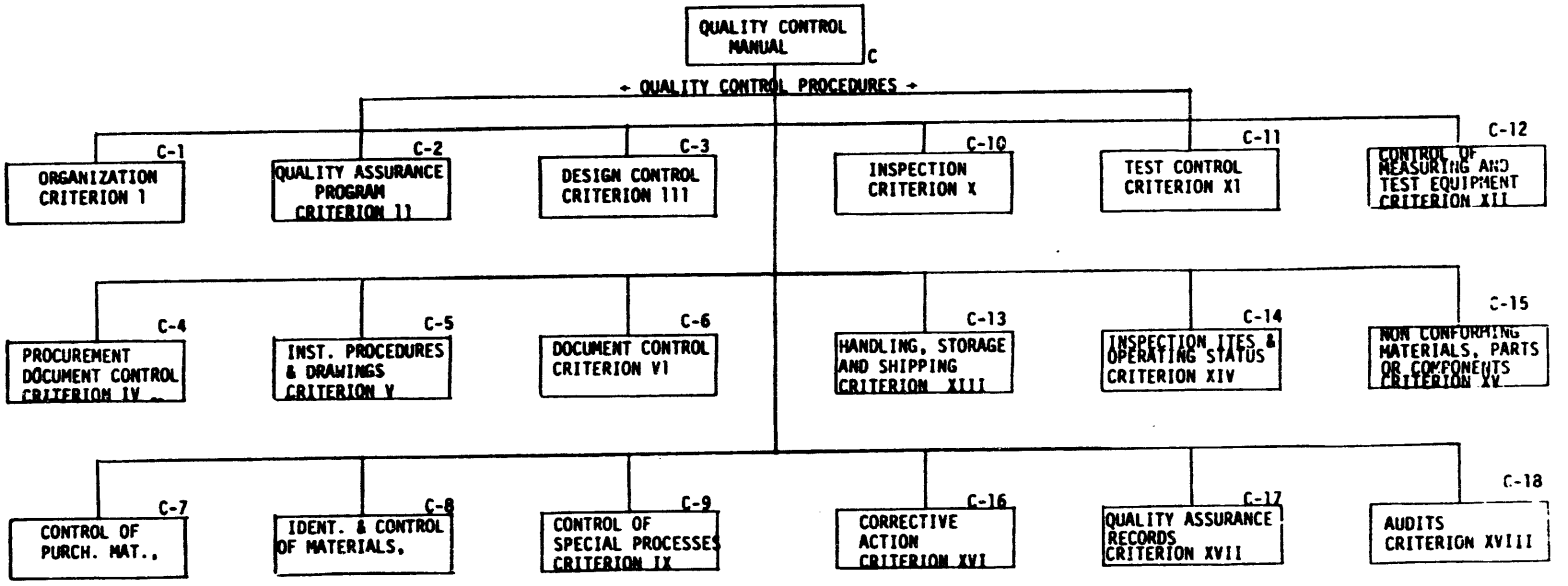

NOTE:

EXAMPLES OF SOME OF THE SUB-TIER PROCEDURES REQUIRED TO IMPLEMENT THESE Q.C. PROCEDURES ARE SHOWN IN FIGURES 5A - 5D

FIGURE B-5. Quality Control Procedures Required for Quality Control Department to Comply with Product Assurance Manual

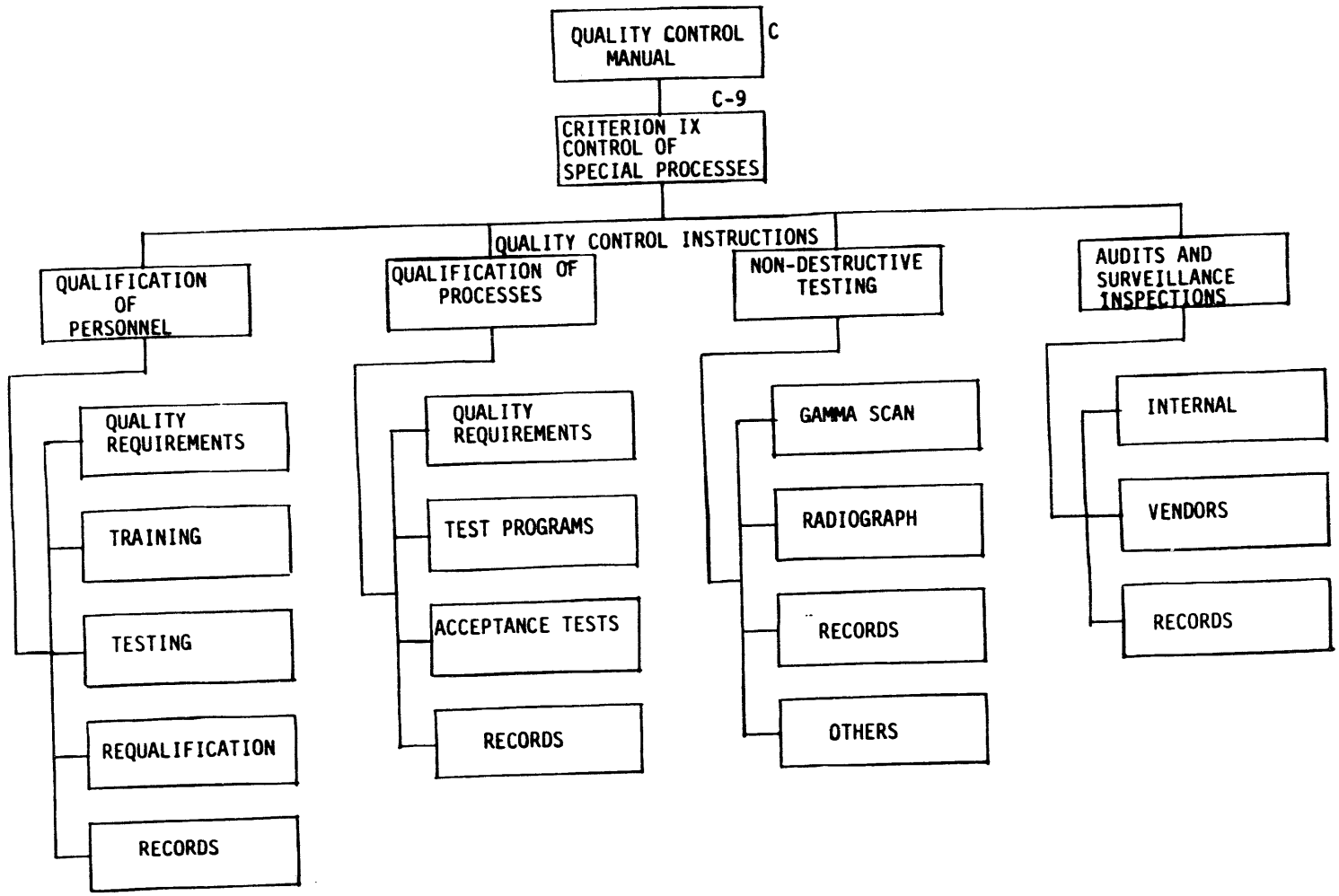

FIGURE B-5A. Quality Control Instructions Required to Implement Quality Control Procedure "Control of Special Processes"

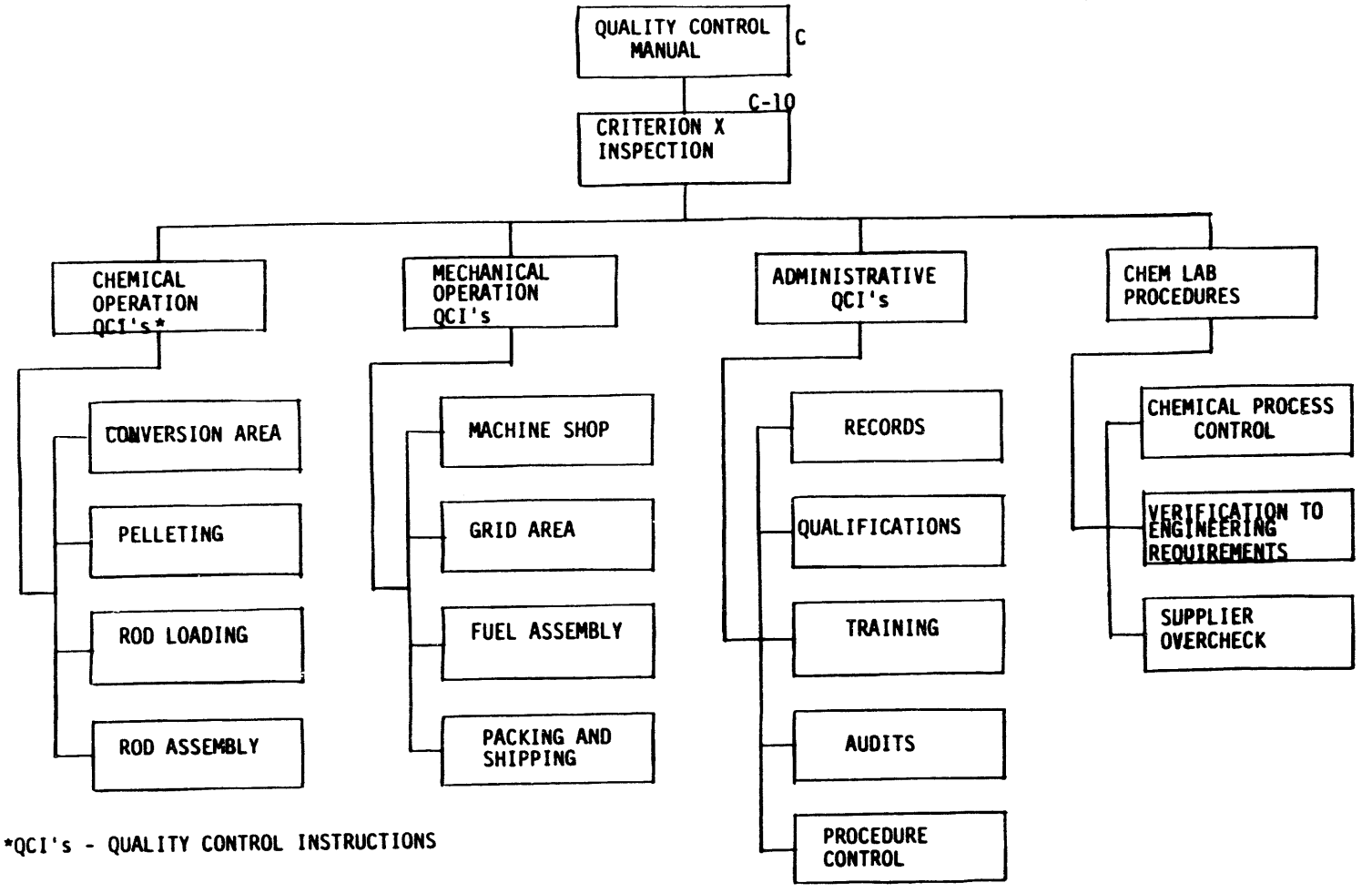

FIGURE B-5B. Quality Control Instructions Required to Implement Quality Control Procedure "Inspection"

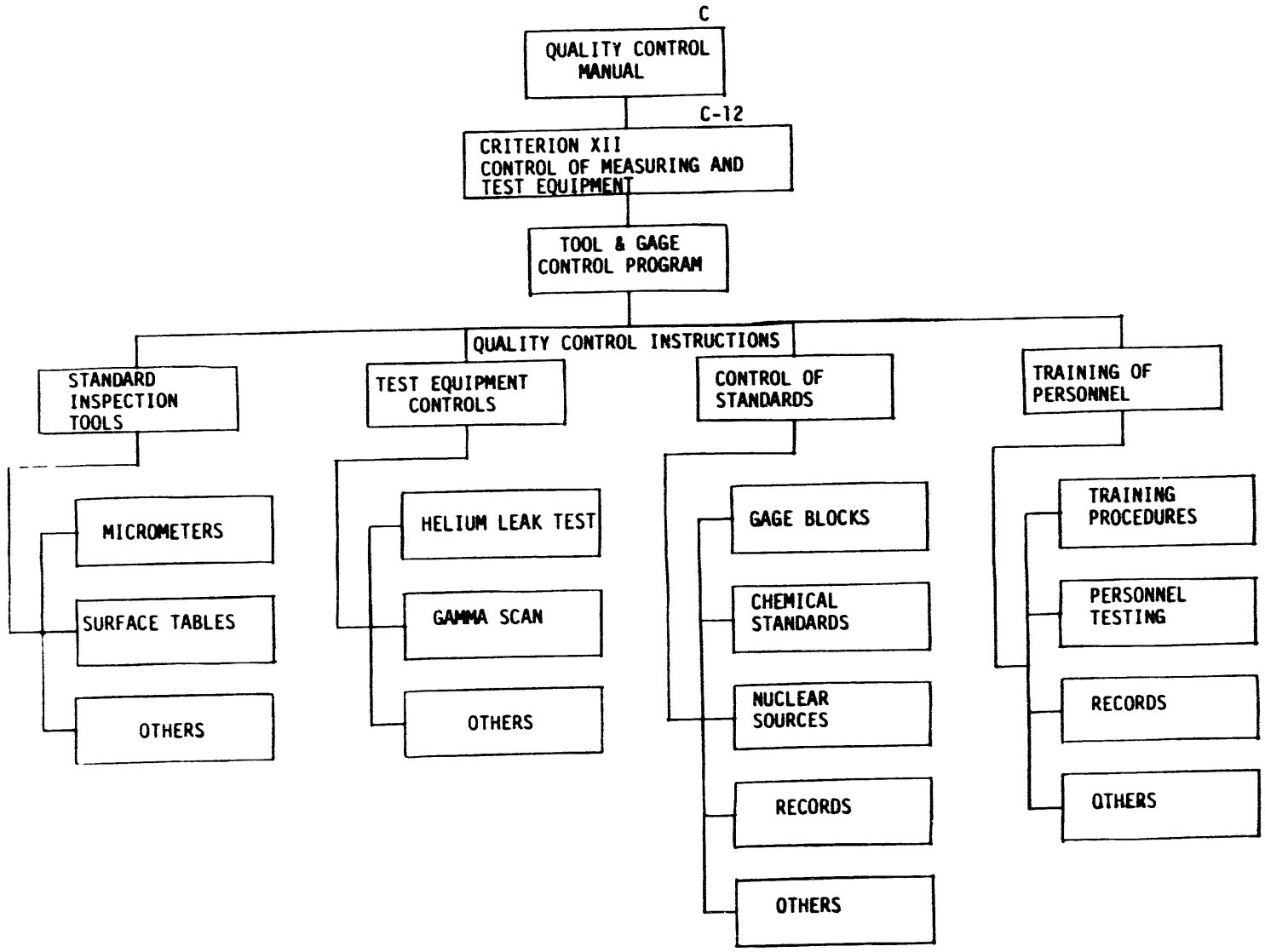

FIGURE B-5C. Quality Control Instructions Required to Implement Quality Control Procedure "Control of Measuring and Test Control"

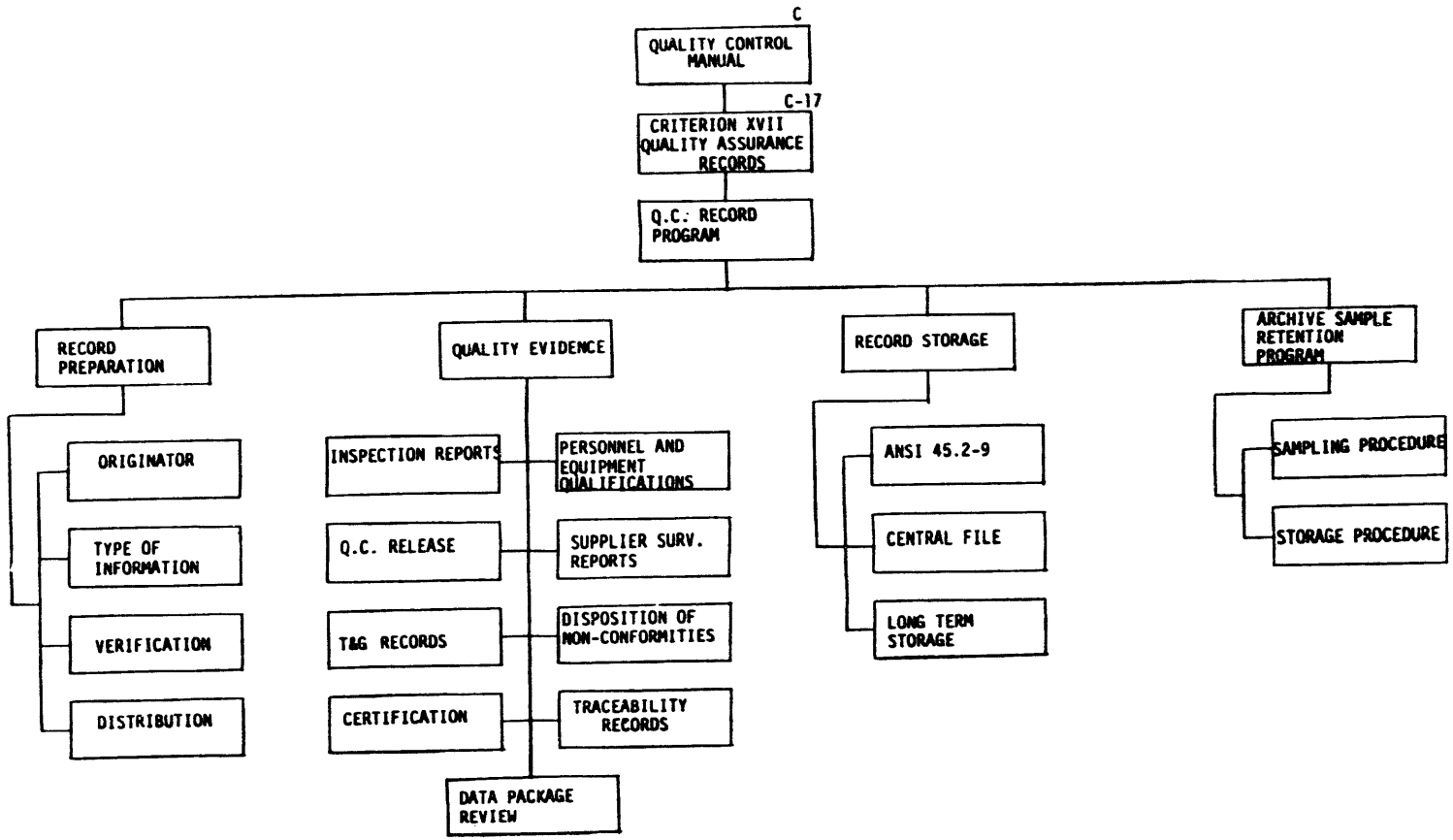

FIGURE B-5D. Records Program and Procedures Required to Comply with Quality Control Procedure "Quality Assurance Records"

APPENDIX C

ACCOUNTABILITY REQUIREMENTS

1. INTRODUCTION

This appendix defines specific accountability requirements for special nuclear materials (SNM) in the MOX Fuel Fabrication Facility, coprocessing case, and suggests means for meeting these requirements. Process measurement points, analytical methods, and assay specifications are defined for a modern, near real-time accountability system; and measurement philosophy is discussed. Accountability requirements are specified only for plutonium; uranium is not considered a SNM because the ^{235}U content is relatively low.

General SNM accountability considerations for the separated plutonium case were presented in an earlier technical data summary.[26] The same general accountability considerations apply to the coprocessing fuel cycle modules.

Computer specifications are not included in the appendix, and overlap between process control and accountability measurement requirements are not considered because Pacific Northwest Laboratory has final responsibility for the FFF. (Du Pont's responsibility for the FFF terminates with the preliminary venture guidance appraisal.) These specifications and requirements, however, will be addressed for all other coprocessing facilities in the final Technical Data Summary on General SNM Accountability and Process Monitoring Requirements scheduled for issue in March 1979.

The SNM accountability system will affect process design and operation of the FFF mainly by requiring installation of online NDA measurement instruments at some locations and by requiring that representative samples be taken at other locations. Process lines and equipment should be physically cleaned before introduction of each new batch of MOX powder. "Hands on" operation should be minimized. Processing should be mechanized and remotely controlled. The process design should include a pneumatic rapid transfer system to move samples from process areas to the analytical laboratory. Small weigh-hoppers should be installed at certain process locations. Scrap and waste accumulated for each process line should be kept separated until the plutonium content is non-destructively assayed.

2. BASIS

An integrated safeguards system is needed to prevent, deter, or promptly detect the loss of a significant quantity of SNM. An accountability system for SNM and a physical safeguards system are the major components of an integrated safeguards system.

No comprehensive national safeguards or SNM accountability system criteria have yet been defined, and safeguards provisions for MOX fuel fabrication plants were not included in the technical data summary issued earlier which dealt with the uranium-plutonium coprocessing fuel cycle.[40] However, the measurement systems and methods specified in this appendix were selected to satisfy anticipated diversion detection criteria for facilities operating in the 1990's.

Los Alamos Scientific Laboratory (LASL) developed generic design and evaluation methods for an advanced SNM accountability system for the Westinghouse Recycle Fuels Plant.[20] This LASL study shows that a near real-time materials accounting system based upon conventional and nondestructive assay measurement can provide effective materials accountability in MOX Fuel Fabrication Facilities at reasonable cost and without disrupting production. The LASL study shows that for a facility with a PuO_2 throughput of 24 kg/day (roughly 1/4 the size of the facility considered in this appendix), single diversions of >200 g plutonium from each of five small portions of the process would be detected. On a weekly basis, repeated smaller diversions totaling >500 g plutonium would be detected. The detection limits are at the 50% detection probability level with a false alarm rate of 1/1000. Many of the LASL recommendations and much of the basic LASL approach are incorporated into this appendix.

3. PROCESS DESCRIPTION

This section briefly describes the process, emphasizing those items of importance to the SNM accountability system. The process is closely coupled to a co-conversion facility. The co-conversion facility produces for FFF a feed powder or master blend containing a mixture of 90% UO_2-10% PuO_2. In the FFF, the master blend is diluted with natural UO_2 powder to form the desired enrichment. The enrichment blend is fabricated into pellets, rods, and rod bundles for refueling light water reactors. The average plutonium output of the FFF is 100 kg Pu/day or about 30 MT Pu/year. Total heavy metal output (U+Pu) is over 2100 kg/day. About 380 kg of oxide scrap (15% of input) is generated each day. Clean scrap accounts for about 14% of input.

Figure C-1 is a block flow diagram of the fuel fabrication process. Master blend powder containing 10 wt % PuO_2 mixed with UO_2 is diluted with natural UO_2 powder to reduce the PuO_2 content to an average of 4.5 wt % for pressurized water reactors or to 5.0 wt % for boiling water reactors. The homogeneous, enrichment-blended, mixed oxide powder is pressed into large compacts. These compacts are granulated to form a coarse powder suitable for mixing with a dry lubricant and pressing into green (unsintered) fuel pellets. The green pellets are about 0.4 inch in diameter and about 0.7 inch high. These pellets are sintered at a high temperature in a reducing atmosphere and ground dry to a specified diameter. Each ground, sintered pellet is inspected for proper dimensions, weight, and surface quality. Fuel rods are then loaded by inserting the required quantity of inspected and accepted pellets into a Zircaloy tube welded at one end. The rods are decontaminated and sealed by welding a plug onto the open end. The rods are inspected and assembled into fuel rod bundles, stored, and shipped.

The main process is operated in batch mode. Master blend is charged into six separate process lines in large batches of 7,000 kg each. Each batch of master blend from the co-conversion facility is homogeneous, and each has the same isotopic abundances and U-Pu ratio. Each large batch is processed in a single line, but each batch is divided into approximately 50 subblends (about 108 kg each) for enrichment blending with (about 117 kg) natural UO_2. Approximately 225 kg of MOX powder is converted into green pellets during one shift. Conversion of the entire 7,000 kg batch of master blend takes 16 to 18 days.

Green pellets are stored in boats for approximately one day before they are sintered. After the pellets are sintered, they are stored in boats for about 1.3 days prior to grinding and final inspection. The pellets are then stacked on trays and stored for a few more days before rod loading. The loaded rods are stored in a rod storage area before assembly. Except for the rod storage area, which provides common storage for 100,000 rods, line integrity is maintained for the six process lines. No routine material transfers are made between process lines.

4. GENERAL SNM ACCOUNTABILITY REQUIREMENTS

4.1 General Considerations and Operational Philosophy

This section addresses the general requirements for a modern SNM accountability system for the MOX Fuel Fabrication Facility. The system is designed to provide both a timely and sensitive notification of diversion or loss of SNM from the process. The objective is to force a potential diverter to commit many small thefts of SNM from the process, thereby exposing him to detection

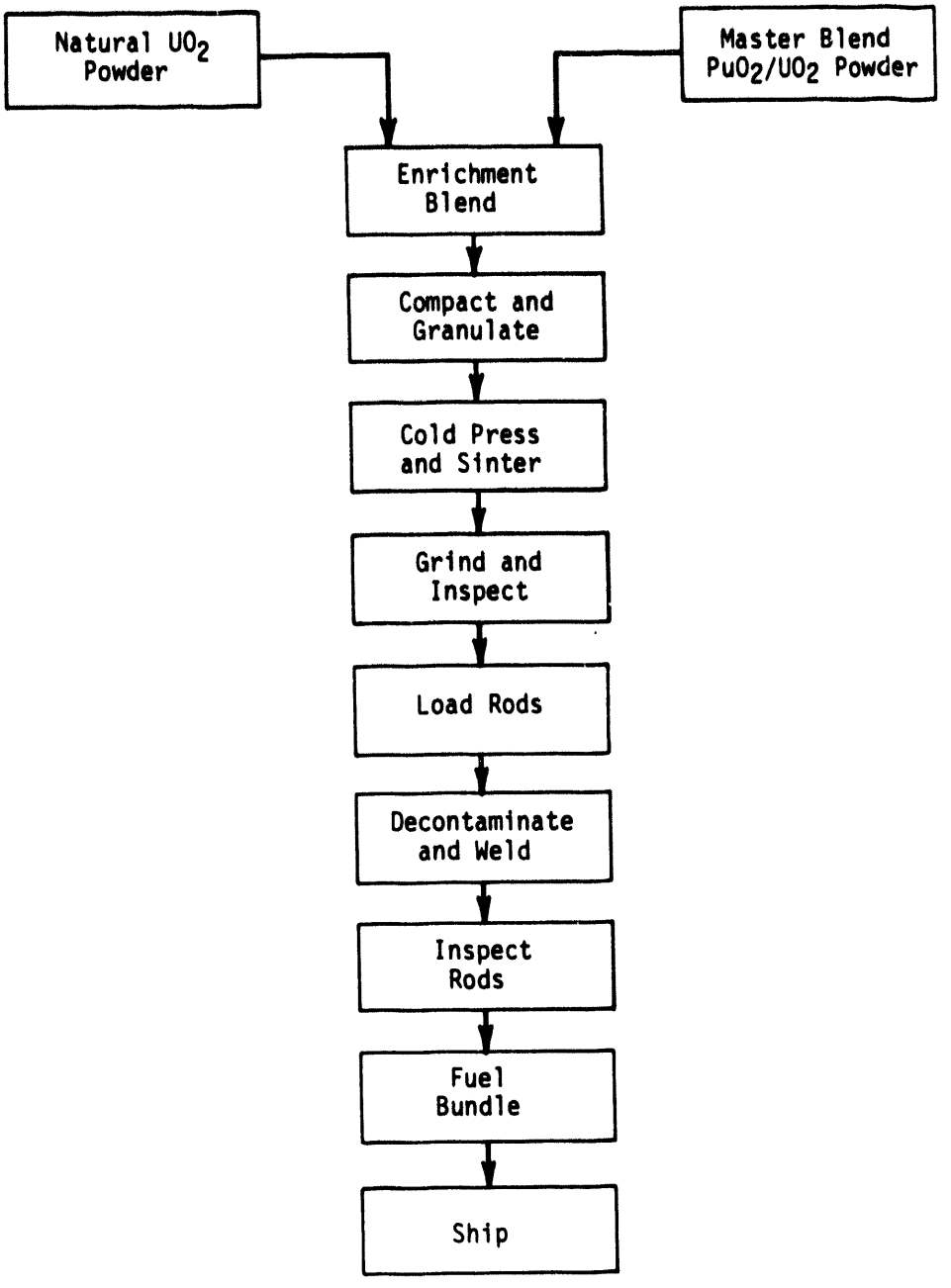

FIGURE C-1. Block Diagram of Mixed Oxide Fuel Fabrication Process

by the physical safeguards system. The SNM accountability and the physical safeguards systems must be completely integrated.

In the past, materials accountability within a plant and the detection of unauthorized losses have relied on material balance accounting following regularly scheduled shutdowns for process inventory. Losses would be discovered after the fact. Because of these limitations on timeliness and detection sensitivity, emphasis has increased to develop automated systems for real-time measurement that permit quantitative confirmation of material location and flows.

The SNM accountability system should interact passively with the process and have minimal interference in a properly run plant where safeguards requirements are being met. The accountability system will often assist process control by providing the first indication of an abnormal operating condition. For example, a small leak in a process stream or an incomplete transfer of a batch of powder would appear to the accountability system as a diversion. Information from both the process control and the accountability systems should be accessible to authorized users. However, it must be assured that process personnel cannot alter accountability data.

The SNM accountability system functions by measuring frequently and very accurately the material balances across small areas of the process. These small process areas are termed unit processes (UPs). Material balances are drawn by measuring all batch material inputs, outputs, scrap, losses, and changes in in-process SNM holdup. In some UPs (pelleting), an entire input batch is completely run through; and output each shift before the material balance is closed: essentially no in-process holdup or changes in in-process holdup need to be measured. Any scrap generated during the balance period must be accumulated and measured for SNM content. In other UPs (green pellet, sintered pellet, and pellet tray storage areas), it is not possible to close a material balance each shift because pellet boats may reside in such areas for several days. In these UPs, the measured SNM content of each boat (or tray) output must be compared with its input SNM content measured days earlier. Because the timeliness of diversion detection is compromised somewhat in these storage UPs, the physical safeguards system <u>must</u> ensure no "hands on" access to or removal of SNM from such areas.

In general, requirements for measurement of SNM content of input and output batches specify <1% relative accuracy and precision. Measurement times should be as short as possible (<30 minutes). Process sampling for offline chemical analysis will be necessary in a limited number of locations. Because sampling creates access to in-process SNM, measurements by online NDA

techniques must be maximized. NDA techniques are also favored because of their inherent speed and because analysis data can be collected and processed automatically by computer.

The process points requiring offline analyses are those where highest measurement accuracies are judged necessary (i.e., <0.5% relative accuracy) or where online techniques cannot provide the required information. In addition, offline analyses are required for "NDA fingerprinting" in which the accurately measured SNM content can be related in quantitative fashion to parameters measured by online NDA instruments specified later in the process. For example, sampling at the enrichment blender is specified for offline chemical analysis of the plutonium factor* of each blend. This analysis and a nondestructive offline measurement of the coincidence neutron emission rate of the sample ("fingerprint" measurement) can be used to calibrate online coincidence neutron counters used later in the process for quantitative analysis of in-process material.

The reliability of the accountability system must be assured. This reliability may be achieved by operating through three computers as suggested by LASL.[41] Frequent (perhaps once each shift) instrument calibrations must be performed.

The effectiveness of the accountability measurement strategy should be optimized by facility-specific computer process and measurement simulation techniques.[41] These techniques evaluate system performance with respect to both timeliness and diversion sensitivity by using simulated accountability data.

In several locations, batch output accountability measurements from one UP becomes the input measurement for the next UP. This technique introduces a measurement correlation effect between these UPs which must be recognized and accounted for in the computer simulation and evaluation of the accountability system. Specification of totally independent SNM measurements between all UPs was not considered practical.

4.2 Holdup

In-process holdup of SNM is a particularly significant problem to the dynamic accountability system. SNM holdup in process lines and equipment is difficult to measure accurately. If holdup is variable, quantitative estimates of holdup in process piping and vessels may be limited to a relative accuracy of 10 to 50%. In-process holdup should be minimized by process design and hardware selection.

---

* Weight of plutonium per unit weight of MOX powder.

Each unit process must be routinely cleaned to minimize in-process holdup. For example, once each shift, the pelletizing process should be operated until all feed material has been consumed and no additional product is being output. The process should then be cleaned as much as practical. Between major enrichment changes, a more thorough cleanout for nondestructive assay should be performed. This runout operation may include vibrating storage vessels and pneumatic transfer lines followed by extensive cleanout.

4.3 Scrap, Waste, and Analytical Samples

Clean and dirty scrap, process wastes, and analytical samples are generated at several process locations. Scrap and waste for each line should be accumulated (generally on a shift basis) and assayed nondestructively for accountability before sending to recovery or waste handling operations. The SNM content of analytical samples must be accounted for even though such samples are an extremely small fraction of the SNM throughput. Scrap, sample, and waste handling requirements are discussed in more detail in Section 4.

4.4 Material Transfers

At three locations during powder unloading and blending, pneumatic transfers of powder batches are specified. Accountability considerations require that these transfers be quantitative and complete (i.e., to within 0.1%) and that residual powder holdup in process lines and equipment be kept at an absolute minimum. Mechanical batch powder transfers can be more accurately accounted by measurements and are preferred where possible.

4.5 Physical Inventories

Regularly scheduled (i.e., monthly) process shutdowns for physical inventory of SNM may not be necessary unless regulatory criteria are developed which specifically require these process shutdowns. Process shutdowns for inventory would preferably be performed only when SNM material balances indicate the need. Even then, only small sections of each process line will require shutdown for inventory. (See sections dealing with unit process accounting.)

5. SPECIFIC SNM ACCOUNTABILITY REQUIREMENTS

5.1 Process Description of the Fuel Fabrication Facility

Details of the process from receiving and unloading UO_2 and master blend powders to storage of assembled fuel bundles have been described previously in the main body of this report. For reference purposes, a block diagram of the process is included in Figure C-2 which emphasizes items of importance to the accountability systems. This figure illustrates process operations for only one process line. Six identical lines will be included in the FFF.

In Figure C-2, solid lines indicate major material flows through the process. Dashed lines indicate process locations where analytical samples are taken for chemical analysis (denoted CA) or where clean or dirty scrap is accumulated before being assayed and sent to Clean Scrap Recovery (CSR) or Dirty Scrap Recovery (DSR). Double solid lines indicate a physically safeguarded conveyor system for boats or trays.

All main process online NDA stations are shown either as Weigh Hoppers, Weigh-Storage Silos, or Weigh-NDA stations. The scrap Weigh-NDA stations are indicated beneath boxes noted "Accum. CSR" or "Accum. DSR."

Multiple arrows (to or from the other five process lines) indicate a single unit operation or storage area which serves all six lines. Unless denoted as a pneumatic transfer, all material transfers are either by gravity or by mechanical device.

The Analytical Support Facility (ASF) is closely coupled to the FFF. The CSR and DSR facilities are separate and also service other facilities in the reprocessing complex.

5.2 Unit Process Accounting

Each of the six fabrication lines is partitioned into ten unit processes to implement the near real-time accountability system. (In addition, the ASF exists as a separate accountability area in which input, output, and inventory quantities of SNM must be measured. This section of the report deals only with the FFF.) These ten UPs in each process line include operations from powder unloading to rod repair. From rod storage through bundle storage, accountability is based upon piece count and is not considered further.

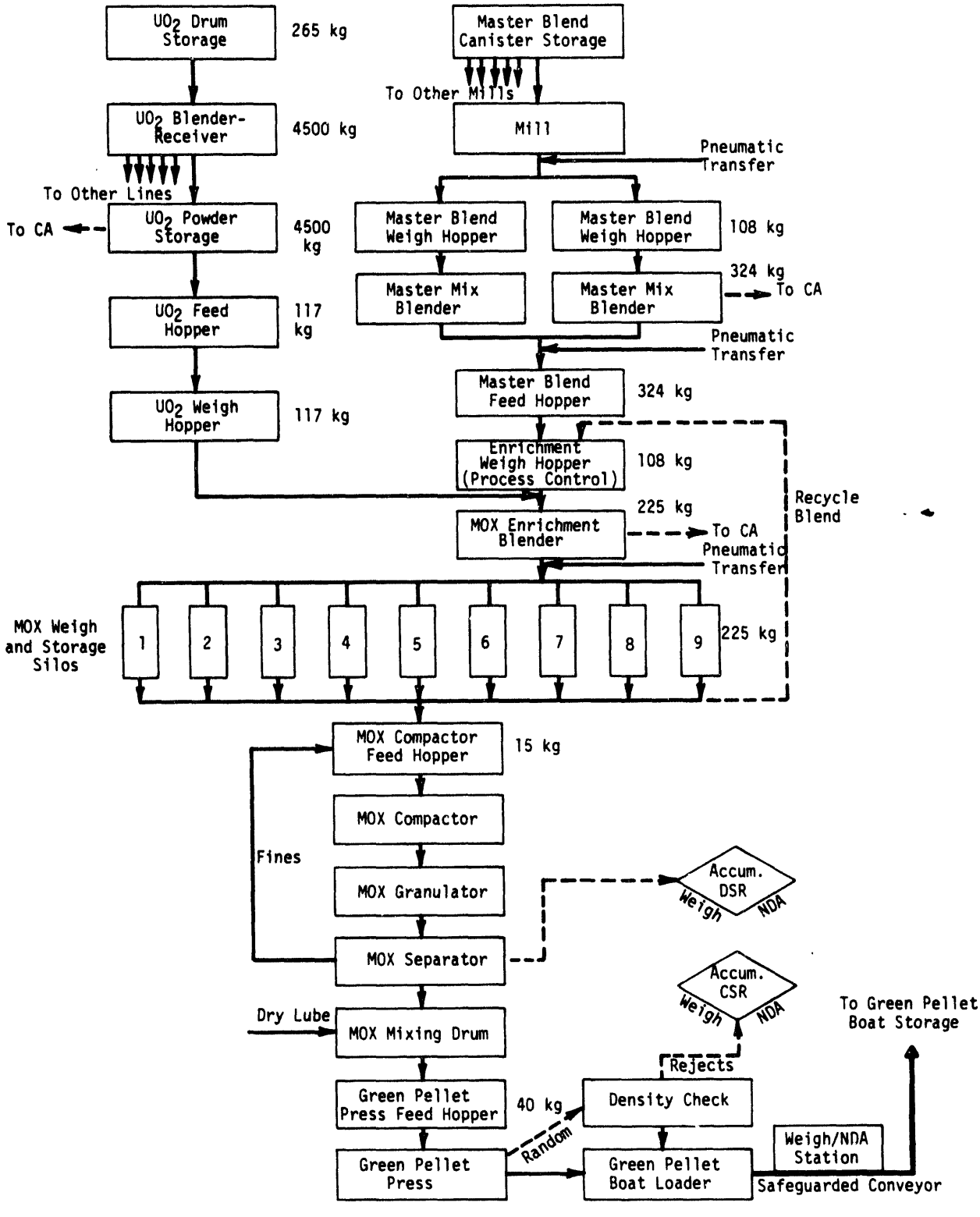

FIGURE C-2. Diagram of Mixed Oxide Fuel Fabrication Process

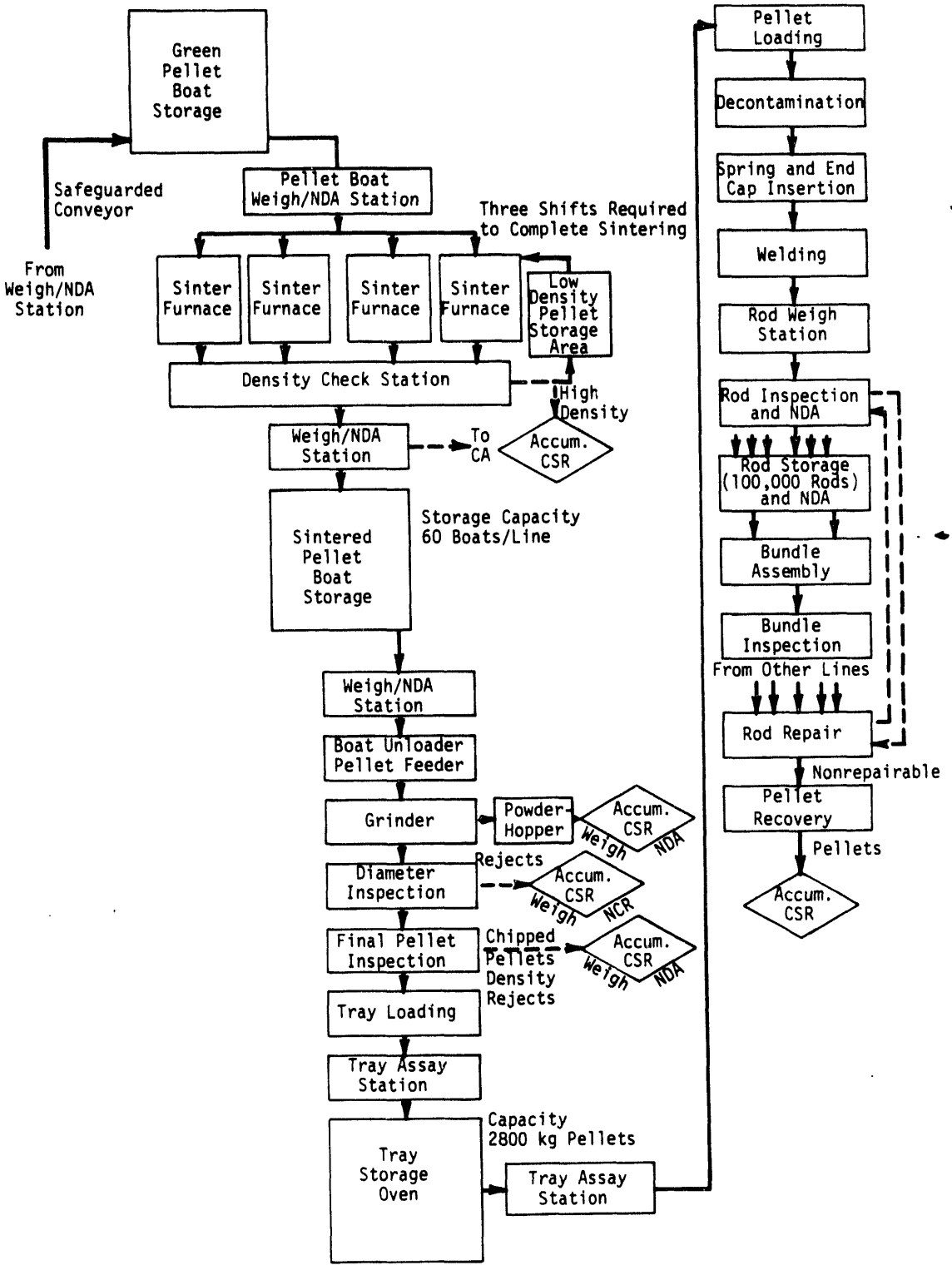

FIGURE C-2, cont'd

5.3 Dynamic Material Balancing

By drawing frequent material balances around unit processes, quantities of material much smaller than the total plant inventory can be controlled. These material balances are referred to as "dynamic" to distinguish them from the material balance performed after a shutdown and cleanout physical inventory.

Each dynamic material balance is based on quantitative measurement of all material transfers into and out of the UP during the balance period. Some material balances in the various UPs also require measurement of the change in in-process holdup during the balance period. During each balance period, all significant quantities of waste and scrap that are generated must be accumulated and measured. Generation of significant quantities of scrap is anticipated only in UPs 2, 3, 5, and 7.

Table C-1 lists the ten unit processes for each identical fabrication line. The UPs were selected to permit material balances to be drawn once each shift in the processing areas. In the storage areas where a pellet boat or tray may reside for several days, a material balance cannot be drawn on a shift basis. In these areas, a balance is drawn by comparing the SNM content of each boat when the boat leaves the area with its measured SNM content upon entry into the storage area. Due to the inherent loss in the timeliness with which diversion can be detected, these areas must be physically safeguarded to a high degree of reliability. SNM scanning devices based upon heat generation should be specified for each boat or tray stored. Such scanners can ensure that unit contents are not altered.

5.4 SNM Measurement System

The accountability measurement system is a combination of weighing (W), offline chemical analysis (CA), online nuclear nondestructive assay based on neutron or gamma counting (NDA-n, NDA-γ), and positive item identification (ID).

Most of the instruments in the main process streams specified for measurement of SNM content of material transfers across UP boundaries are online, NDA, coincidence neutron well counters, and load-all weighing devices. Holdup of SNM in-process can best be measured by NDA gamma counting instruments or neutron counters. Weighing devices such as load cells should have accuracies of 0.1 to 0.3% of full scale. The NDA-n (neutron coincidence) counters for SNM measurement of batch transfers should be accurate to <5%. The measurement accuracies for SNM in-process holdup instruments are generally 10 to 50%. All NDA instruments should be automated so that data can be fed directly to an accounting computer. Automated calibration features should be included.

TABLE C-1

Unit Processes for the Fuel Fabrication Facility

Unit Process Number	*Operation*
1	Master Blend Powder Unloading
2	Blending
3	Compacting - Green Pelletizing
4	Green Pellet Boat Storage
5	Sintering
6	Sintered Pellet Storage
7	Grinding - Inspection - Tray Loading
8	Tray Storage
9	Rod Loading - Inspection
10	Rod Repair - Pellet Storage

Chemical analysis (CA) will be required on batches after enrichment blending to correlate precisely the SNM content of materials with NDA instrument readings and weights taken later in the process. These analyses include measurements of Pu factor (weight of Pu per weight of powder), Pu and U isotopics, specific neutron and gamma emission rates (fingerprints), and moisture content. In the unloading and blending operations (UP-1 and UP-2), prior CAs measured for the large 5500-kg batches of master blend at the Conversion Facility are used.

5.5 Standards and Measurement Control

A formal program of calibration and quality control for all NDA instruments and CA methods used in the SNM accountability measurement systems will be of great importance. For the traditional CA methods specified in this report, quality assurance methods are well developed and rely on periodic calibration with standards traceable to the NBS.

Standards and measurement controls for NDA instruments, however, are not as readily available. Each NDA instrument must be calibrated over the anticipated range of sample matrices, sample/detector geometric configuration, container type, isotopic mix, and the spatial configuration of samples inside containers. Detailed analysis of factors which affect measurement errors are essential to the ability of accountability systems to detect diversion.

5.6 Measurement Strategies for Each Unit Process

The following measurement strategies are summarized in Table C-2. In this table, both input and output measurement requirements are listed for each of the ten unit processes. The requirements include number of analyses for each shift, a possible analysis method (offline chemical analysis or online NDA), and the required accuracy. SNM in-process holdup measurements are specified wherever they are judged appropriate.

Table C-3 summarizes the anticipated MOX scrap and waste generated in the fuel fabrication process. The anticipated shift flows (input and output quantities of MOX is kg) are indicated for a fully operating line. Samples sent to the Analytical Support Facility for chemical analysis are also included.

TABLE C-2

Accountability Measurement Summary

UP	*Input*	*No./ Shift*	*Relative Accuracy, %*	*Output*	*No./ Shift*	*Relative Accuracy, %*	*Holdup*	*Relative Accuracy, %*
1	Container Weight - Tare + Prior CA of Pu Factor	3	0.3	Weight in Weigh Hopper	1	0.3	Filters, Residuals	20
2	Same as Output, UP-1	1	0.3	a) MOX Weight in Silo + CA b) Accumulated Scrap, NDA-n c) Accumulated Waste, NDA-n d) Analytical Sample, NDA-n	1 5 1 1	0.3 10 2	Change	20
3	MOX Weight in Silo + CA Same as Output a) of UP-2	1	0.3	a) Sum of Weight of MOX in Boats b) Accumulated Dirty Scrap, NDA-n	15 -	0.2 5	Change	20
4	MOX Weight in Boat	15	0.2	MOX Weight in Boat + NDA-n Verification + Prior CA	15	0.2	-	-
5	Same as Output UP-5 Estimated Pu Factor, CA	15	0.2	a) MOX Weight in Boat + Pu Factor, CA b) MOX Weight in Boat of Overdense Pellets + Pu Factor c) Sample for CA	15 ∿1 15	0.2 0.3 -	Change - -	20 - -
6	MOX Weight in Boat + Pu Factor, UP-5 + NDA-n Verification	15	0.3	MOX Weight in Boat + Pu Factor, UP-5 + NDA Verification	15	0.3	-	-
7	Same as Output UP-5	-	0.2	a) Net MOX Weight in Trays + Prior Pu Factor, UP-5 b) Accumulated Scrap, Weight + NDA-n c) Accumulated Waste, Weight + NDA-n	∿20 1 1	0.3	Change	20
8	Same as Output UP-8	-	0.3	Net MOX Weight in Trays + Prior Pu Factor, UP-5 + NDA-n Fingerprint	∿20	0.3	-	-
9	Net MOX Weight Removed from Tray + Prior Pu Factor, UP-5	∿75	0.3	Net MOX Weight Inserted in Rod + Prior Pu Factor, UP-5	∿75	0.3	-	-
10	Repairable: Piece Count	∿2	-	Repairable: Piece Count	∿2	-	-	-
	Nonrepairable: Same as Output UP-9	∿1	0.3	Nonrepairable Net Pellet Weight Removed from Rod + Prior CA, UP-5	∿1	0.3	-	-

TABLE C-3

Scrap, Waste, and Analytical Samples Generated in Fuel Fabrication Process[a]

UP	*Operation*	*Input*	*% Reject*	*Output*	*Clean Scrap*	*Dirty Scrap*	*Sample to ASF*
2	Enrichment Blending	225.00	Nil	224.97	0	Nil	0.03
3	Green Pelletizing, Density Rejects	224.97	0.25	224.41	0.56	Nil	-
5	Sintered Pelletizing, Chipped Pellets - Density Rejects	224.41	1.35	221.38	3.00	Nil	0.03
7	Grinding						
	• Powder	221.38	3.62	213.37	8.01	Nil	-
	• Grinding Rejects	213.37	0.5	212.30	1.07	Nil	-
	• Dimensional Rejects	212.30	3.8	204.20	8.07	Nil	-
All	Dirty Scrap[b]	204.20	1.0	202.15	-	2.04	-
All	Waste	202.15	0.5	201.14	-	1.01	-
10	Rod Inspection	201.14	3.0	199.21	-	-	-
	• Repairable		68, Relative				
	• Nonrepairable		32, Relative		1.93		

a. In kg MOX per shift per line.

b. Sources of dirty scrap are impure product and sweepings from the entire process. In this table, all dirty scrap is assumed to be generated as impure product.

5.6.1 UP-1 — Master Blend Powder Unloading

Master blend is produced in 7000 kg batches in the co-conversion facility. Shipping containers, each containing about 36 kg of master blend, are sent to the FFF where they are identified, weighed, and assayed by NDA-n for verification.* The cans are opened and the contents are dumped quantitatively into a master blend weigh hopper. The empty cans are weighed for tare and verified empty by NDA. Operation is batch-mode with three canisters per shift dumped into the weigh hopper. A CA of the Pu weight factor is performed initially at the co-conversion facility. After the master blend is weighed, it is transferred to the master mix blender in UP-2.

Pu Input UP-1:	Σ (container weights - tares); Pu factor by prior CA
Pu Output UP-1:	Powder weight in weigh hopper; Pu factor by prior CA
Pu Holdup**:	NDA-γ, NDA-n

The Pu material balance (MB) for each shift is

$$MB = \Sigma \text{ Input} - \text{Output} - \Delta \text{ Holdup}$$

5.6.2 UP-2 — Blending

Blending of the combined three (about 108-kg) batches of master blend is performed in the master mix blender before being pneumatically transferred to the master blend feed hopper. The blended material is metered in about 108-kg batches into the enrichment weigh hopper. Only a process control measurement is required at this point to ensure proper blend ratios with the UO_2 from the UO_2 weigh hopper. Each batch is enrichment-blended to form about 225-kg batches of MOX which is then pneumatically transferred batchwise to one of nine weigh-storage silos. A 30-gram sample of each 108-kg batch of MOX is taken from the enrichment blender for CA. Occasionally, an improper blend will be recycled internally from a storage silo back to the enrichment weigh hopper. Because this is an internal recycle stream, no

---

* The master blend containers are positively identified, weighed empty and full, and fingerprinted by NDA-n before the containers leave the co-conversion facility storage area.

** Holdup filters and glove box are measured by NDA-γ once per shift. Empty containers are assayed by NDA-n each shift.

effect on the material balance for UP-2 is registered. A check of the weight of the recycled batch (vs. the weight at the silo) should be performed for process control.

A material balance is drawn around each 108-kg subblend. At the end of each shift, all three batches have been processed from the master mix blender to the silos.

Pu Input UP-2:	Same as output UP-1
Pu Output UP-2:	MOX weights in silo; Pu factor by CA*; analytical sample (A)
Pu Holdup:	NDA-γ of residual in empty master blend weigh hopper, master mix blender, and transfer lines; NDA-n of accumulated scrap (S) and waste (W)

The shift material balance is

$$MB = \text{Input} - \Sigma\ \text{Output} - \Delta\ \text{Holdup} - A - \Sigma\ S - \Sigma\ W$$

5.6.3 UP-3 — Compacting, Pelletizing

MOX powder is transferred from one of the storage silos to a small (15-kg capacity) compactor feed hopper. From the compactor, tablets are granulated and separated (fines return to the compactor feed hopper). The granulated MOX is mixed with a dry lubricant in a mixing drum. The mixture then flows into a green pellet press feed hopper (40-kg capacity). A pellet press prepares green pellets which are placed in a boat on a conveyor. Pellets for approximately 15 boats can be made from one 225-kg subblend. The pelletizing operation is run batchwise (one 225-kg batch/shift) followed by a process runout and shift cleanup. Pellets from each boat are checked randomly for proper density, and rejects are accumulated and assayed each shift before they are sent to CSR. On rare occasions, a separator screen may break giving coarse powder granules. This material is accumulated and sent to DSR.

Loaded boats are assayed at the weigh/NDA station

Pu Input UP-3:	MOX weight in silo; Pu factor by CA (same as output UP-2)

---

* The sample taken for CA is analyzed for Pu factor, impurities, and a fingerprint specific neutron and gamma emission rate to permit later NDA-n and NDA-γ measurements to be performed online.

Pu Output UP-3: Σ MOX weight in boats; Pu factor (historical)*

Pu Holdup: NDA-γ of residual in compactor feed hopper, compactor, granulator, separator, mix drum, press feed hopper, green pellet press, and boat loader. NDA-n of accumulated scrap (S) and waste (W)

The Pu material balance in UP-3 is given by

$$MB = \text{Input} - \Sigma\ \text{Output} - \Delta\ \text{Holdup} - \Sigma\ S - \Sigma\ W$$

5.6.4 UP-4 — Green Pellet Storage

After being weighed and assayed by NDA-n counting, boats of pellets (15-kg MOX/boat) are conveyed to green pellet storage. Boats will remain on the conveyor during storage. Storage capacity will be about 40 boats/line, and the average storage period will be about one day.** The storage area must be physically safeguarded. Boats are reassayed at a second pellet boat weigh-NDA station upon emergence after positive identification.

Pu Input UP-4: Net pellet weight in boat + NDA-n

Pu Output UP-4: Net pellet weight in boat + NDA-n

The Pu material balance is given by

$$MB^{\dagger} = \text{weight after storage} - \text{weight before storage}$$

---

* Addition of dry lubricant will change the Pu factor in the green pellets by about 0.5% compared with that of the input MOX powder. A historical estimate can probably be used to adjust the Pu factor if this factor is measured at startup.

** Since a material balance around each boat normally will not be drawn until the boat emerges from storage, a loss of timeliness in diversion detection is unavoidable. Increased physical protection must be assured.

† The material balance will be based on net pellet weights before and after storage (weight should be measurable to ±0.2%). The comparison NDA measurement is for purpose of verification only (±5%).

5.6.5 UP-5 – Sintering

Green pellet boats enter one of four sintering furnaces where the residence time is about one day. Upon emerging from the sintering furnace, a few pellets from each boat are checked for proper density. Overdense pellets (estimated to be 3.03-kg MOX/shift) are sent to the CSR Facility. Low-density pellets are resintered in an internal recycle line. Boats containing pellets with acceptable densities are assayed at a third weigh-NDA station.

Pu Input UP-5:	Weight of MOX in green pellet boat; estimated Pu factor*
Pu Output UP-5:	Weight of MOX in sintered pellet boat; measured Pu factor**
	Weight of MOX in overdense pellet boat (Scrap); estimated Pu factor
	Accumulated sweepings (holdup); NDA-n sample to ASF (A)

The material balance for Pu is given by

$$MB = \Sigma \text{ Input} - \Sigma \text{ Output} - \Delta \text{ Holdup} - \Sigma S - A$$

5.6.6 UP-6 – Sintered Pellet Storage

Accountability requirements for sintered pellet storage are identical to those of green pellet storage. The sintered pellet storage area is larger, with an average residence time of 1.3 days. This storage area is also heated.

SNM accountability will be based on comparison of net pellet weights before and after storage. An NDA-n count must be taken to verify weight data.

---

* A prior CA of the Pu factor was measured at the MOX enrichment blender. However, about 0.5 wt % Sterotex (dry lubricant) was added before pelletizing. This correction factor must be measured and applied.

** UO_2 specifications require U-O ratio of 2.05 to 2.17. This factor will be constant for each 5500 kg batch of master blend but may vary among batches. The sintered UO_2-PuO_2 product will have a constant U-O ratio. A statistical sampling (i.e., three pellets) should be removed from each boat for CA of the Pu factor. This factor will be used to correct for loss of oxygen and lubricant.

5.6.7 UP-7 – Grinding, Inspection, and Tray Loading

Sintered pellets are unloaded from boats and ground dry to the desired diameter. Each pellet is inspected for proper weight (density), dimension, and surface characteristics. Pellet stacks of proper fuel column length are formed in trays containing multiple troughs (10-kg MOX/tray). The grinding and inspection operations produce considerable quantities of powder and dimensional and density rejects each shift. Table C-3 summarizes the expected amount of clean scrap generated in UP-7 each shift. Normal operation is to run out the feeder and grinder each shift and accumulate all scrap and waste for assay before the scrap and waste are sent to CSR. Change in holdup is minimal because the runout operation leaves essentially the same quantity of holdup each time.

Pu Input UP-7:	Same as shift output weight from UP-6 and Pu factor from UP-5
Pu Output UP-7:	Net weight of ground pellets in tray and NDA measurement. Accumulated scrap and waste by weight and NDA.

The Pu material balance is given by

$$MB = \Sigma \text{ Input} - \Sigma \text{ Output to Tray Storage} - \Sigma \text{ Accumulated Scrap} - \Sigma \text{ Accumulated Waste} - \Delta \text{ Holdup}$$

5.6.8 UP-8 – Tray Storage Oven

Accountability requirements for the tray storage oven are similar to those in the green pellet and sintered pellet storage areas. The storage capacity per line is 2800 kg MOX. Each process line will have a tray storage oven with a 280-tray capacity. Average residence time will be about 12 shifts of normal operation. Input and output Pu accountability will be by positive identification of trays, net weight of MOX in pellets, and by NDA fingerprint. A prior chemical analysis to determine the Pu factor may be used with the weight measurement to obtain Pu content of each tray.

5.6.9 UP-9 – Rod Loading and Inspection

Stacked pellets from the grooved troughs are remotely inserted into the open end of the cladding. Pellets are vibrated or pushed into the cladding in a horizontal position. A length gage is used to insert the proper number of pellets into each rod. The open end of the rod is decontaminated before the top end cap is welded. Pressurized water reactor tubes are pressurized with

helium gas after welding by using a predrilled hole. The hole is sealed by laser welding. The sealed rod is leak-checked and the weld is radiographed. The fissile content of the rod is measured with an NDA fuel rod analysis system. This active ^{252}Cf fuel rod assay system can measure the fissile content (to 0.5%) and pellet-to-pellet uniformity (to 5% relative).[3]

A separate rod loading system is provided for each of the six process lines. There are three rod inspection and NDA sites. Rods which pass inspection enter a rod storage area (100,000 rod capacity).

SNM accountability is maintained on a weight basis and also by length gaging of the pellet stack during rod loading and inspection. Rod component (tare weight) must be of uniform weight. Each rod should be positively identified before and after loading. After insertion of the weighed pellet stack, decontamination, and welding, the rod is reweighed for comparison with the original weight. The NDA total fissile assay and the pellet-to-pellet uniformity check will assure that dummy pellets have not been substituted for MOX pellets.

Pu Input UP-9: Weight of MOX pellet on trays (same as output UP-8)

Pu Output UP-9: Net weight of MOX in loaded rods

The material balance is closed around each rod:

MB = Net weight of MOX inserted in rod (tray weight-tare)
- net weight of MOX in rod (loaded weight-tare)

5.6.10 UP-10 — Rod Repair

Reject fuel rods from rod inspection fall into two general categories: repairable (68%, 4.10-kg MOX/shift/line) and non-repairable (32%, 1.93-kg MOX/shift/line). All rods will be marked for positive identification. Repairable rods will be accounted for by piece count. Nonrepairable rods will be weighed and drilled open. The MOX pellets will be removed and the empty rod reweighed (tare weight). The pellets will be assayed nondestructively by a neutron counter for verification and will be sent to CSR.

Pu Input UP-10: Rods will be piece counted. The Pu content will have been measured by weight and Pu factor in UP-9.

Pu Output UP-10: Repairable rods by piece count. Nonrepairable rods by rod weight-tare; before measurement Pu factor; NDA-n assay (verification).

The material balance will be drawn each shift by

$$MB = \Sigma \text{ Input} - \Sigma \text{ Output}$$

5.7 Analytical Samples

Note in Table C-4 that the quantity of material taken from the process for chemical analysis is a very small sidestream when expressed as a percent of throughput for each line (<0.1%). Three sampling points are currently anticipated from each of the six process lines:

a. Master mix blend tank (master blend powder)

b. MOX enrichment blend tank (MOX powder)

c. Ground, sintered pellets (MOX pellets)

These sampling and CA requirements are summarized in Table C-4.

TABLE C-4

Summary of Analytical Samples for Chemical Analysis

Sample Location	*Frequency, each line*	*Analyses Required*
Master Mix Blend Tank	1 sample/day	Pu Factor, Isotopics, Moisture, M/O Ratio Purity (elemental), NDA Fingerprint
Enrichment Blend Tank	3 samples/day	Pu Factor, NDA Fingerprint
Sintered Pellet Weigh NDA Station	15 samples/day	Pu Factor, NDA Fingerprint

a. Master Mix Blend Tank

About 30 grams of master blend powder containing three grams of PuO_2 will be removed for CA once for each 324-kg batch received from the co-conversion facility. This sample will be analyzed for Pu factor (weight of Pu per unit weight of master blend), moisture content, M/O ratio, Pu isotopics, U isotopics, and possibly other variables. Analytical values should agree within statistical limits to prior analyses at the co-conversion facility. The analyses listed above will also be used by process control to determine correct blending ratios that yield a proper enrichment blend. The master blend sample should also be fingerprinted for specific neutron and gamma emission rates. The fingerprint data will be used for calibration of the online NDA-n counters used to measure the SNM content of waste scrap generated in UP-1 and UP-2. These data will also provide a more accurate assay of in-process holdup in the same two UPs.

b. Enrichment Blend Tank

A 30-gram sample will be taken for CA from each 225-kg batch of blended material (4.5 wt % PuO_2 for the pressurized water reactor line, 5.0 wt % PuO_2 for the boiling water reactor line) before transfer to the MOX weigh and storage silos. Each batch is used as feed for one shift's pelletizing operation. CA requirements include measurement of the Pu factor and neutron and gamma emission NDA fingerprints. The measured Pu factor will permit all subsequent Pu accountability measurements to be performed on a weight basis in combination with online NDA verification. The fingerprint analysis will be used in the quantitative measurement of in-process SNM holdup in subsequent process steps.

c. Ground, Sintered Pellets

A statistical sample (i.e., three pellets) should be removed from each sintered pellet boat for chemical analysis of the Pu factor. The frequency of this sampling may be reduced as historical data accumulate on the change in Pu factor that accompanies the loss of lubricant and oxygen during sintering. An NDA fingerprint should also be performed in the laboratory to permit subsequent analysis of Pu by online NDA methods.

5.8 Clean Scrap

Clean scrap generated in the fuel fabrication process represents a substantial sidestream. Since material balances will be drawn around each line on a shift basis, NDA instruments will

play a major role in the assay of scrap sent to CSR. The CSR facility is separate and also serves the co-conversion facility, but it does not input material back into fuel fabrication. It is recommended strongly that clean scrap generated in each line be assayed nondestructively and weighed at the end of each shift according to type (listed below) before being sent to CSR facility. This will permit a timely material balance to be drawn each shift. After arrival at CSR, the container should be positively identified, weighed, and reassayed by NDA analysis. Once confirmation is achieved, the containers may be accumulated until a suitable dissolver batch (thought to be about 30 kg scrap) is accumulated. A sample of this dissolver batch will be sent when it becomes available to ASF for chemical analysis, and the results will be compared with the values obtained by NDA. (NDA values should always be updated by the CA value. This updated value can be used to draw a material balance around each 7000-kg batch of master blend received from the co-conversion facility. One batch of master blend is consumed about every 16 days. A thorough line cleanout should be completed after processing of each 7000-kg batch.)

5.9 Dirty Scrap

Dirty scrap is generated in batches of impure product as determined by chemical analysis of the enrichment blend or, occasionally, of the sintered pellets. Dirty scrap is also generated by dropped pellets, floor sweepings, or from powders accumulated during line cleanout between major batch campaigns (approximately every 16 days).

All dirty scrap is accumulated on a shift basis, placed in a positively identifiable container, weighed, and assayed nondestructively before being sent to dirty scrap recovery facility. Line integrity of the scrap is maintained for updating material balances at batch intervals (about 16 days).

5.10 Waste

Solid waste consists of dirty gloves, tools, paper, etc. Waste is accumulated from each line and assayed nondestructively on an infrequent basis (perhaps weekly) before being sent to waste storage.

DATE
FILMED
10/17/94

END