1 of 4

# DISTRIBUTION SHEET

| To | From | Page 1 of 1 |
|---|---|---|
| T. L. Moore/C. E. Hanson | J. P. Strehlow<br>TWRS Engineering Support Services | Date 8/15/94 |
| Project Title/Work Order | | EDT No. 142746 |
| Structural Analysis of Color Video Camera Installation on Tank 241AW101/N2030 | | ECN No. N/A |

| Name | MSIN | Text With All Attach. | Text Only | Attach./ Appendix Only | EDT/ECN Only |
|---|---|---|---|---|---|
| Central Files | L8-04 | X | | | |
| R. K. Brown | H5-68 | | | | X |
| J. E. Geary | S5-14 | | | | X |
| C. E. Hanson | H5-09 | | | | X |
| R. A. Harding | N1-46 | X | | | |
| G. D. Johnson | S7-15 | | | | X |
| E. H. Kohlman | H5-09 | X | | | |
| S. L. Krogsrud | R3-08 | X | | | |
| J. W. Lentsch | R2-78 | | | | X |
| M. L. McElroy | S1-57 | X | | | |
| T. L. Moore | H5-09 | X | | | |
| J. P. Strehlow | H5-68 | X | | | |
| OSTI (2) | L8-07 | | | | |

A-6000-135 (01/93) WEF067

DISTRIBUTION OF THIS DOCUMENT IS UNLIMITED

AUG 25 1994 (21) Sta. 21

# ENGINEERING DATA TRANSMITTAL

Page 1 of 1

1. EDT 142746

| | | |
|---|---|---|
| 2. To: (Receiving Organization)<br>Mechanical Equipment<br>T. L. Moore | 3. From: (Originating Organization)<br>TWRS Engineering Support Services<br>J. P. Strehlow | 4. Related EDT No.:<br>N/A |
| 5. Proj./Prog./Dept./Div.:<br>Waste Management | 6. Cog. Engr.:<br>J. P. Strehlow | 7. Purchase Order No.:<br>N/A |
| 8. Originator Remarks:<br>Submitted for approval. | | 9. Equip./Component No.:<br>N/A |
| | | 10. System/Bldg./Facility:<br>Tank 241AW101 |
| 11. Receiver Remarks: | | 12. Major Assm. Dwg. No.:<br>H-2-82280 |
| | | 13. Permit/Permit Application No.:<br>N/A |
| | | 14. Required Response Date:<br>ASAP |

15. DATA TRANSMITTED

| (A) Item No. | (B) Document/Drawing No. | (C) Sheet No. | (D) Rev. No. | (E) Title or Description of Data Transmitted | (F) Impact Level | (G) Reason for Transmittal | (H) Originator Disposition | (I) Receiver Disposition |
|---|---|---|---|---|---|---|---|---|
| 1 | WHC-SD-WM-DA-163 | | 0 | Structural Analysis of Color Video Camera Installation on Tank 241AW101 (2 Volumes) | SQ | 1 | | |
| | | | | | | | | |
| | | | | | | | | |

16. KEY

| Impact Level (F) | Reason for Transmittal (G) | Disposition (H) & (I) |
|---|---|---|
| 1, 2, 3, or 4 (see MRP 5.43) | 1. Approval 2. Release 3. Information 4. Review 5. Post-Review 6. Dist. (Receipt Acknow. Required) | 1. Approved 2. Approved w/comment 3. Disapproved w/comment 4. Reviewed no/comment 5. Reviewed w/comment 6. Receipt acknowledged |

17. SIGNATURE/DISTRIBUTION (See Impact Level for required signatures)

| (G) Reason | (H) Disp. | (J) Name | (K) Signature | (L) Date | (M) MSIN | (J) Name | (K) Signature | (L) Date | (M) MSIN | (G) Reason | (H) Disp. |
|---|---|---|---|---|---|---|---|---|---|---|---|
| 1 | 1 | Cog.Eng. JP Strehlow | J.P. Strehlow | 8/17/94 | H5-68 | | | | | | |
| 1 | | Cog. Mgr. RK Brown | RK Brown | 8-22-94 | H5-68 | | | | | | |
| 1 | 1 | QA SJ Krogsrud | SJ Krogsrud | 8/18/94 | R3-08 | | | | | | |
| 1 | 1 | QA Safety ML McElroy | M.L. McElroy | 8-17-94 | S1-57 | | | | | | |
| 1 | | Env. | | | | | | | | | |
| 1 | 1 | EH Kohlman | E Kohlman | 8/18/94 | H5-09 | | | | | | |
| 1 | | | | | | | | | | | |

| | | | |
|---|---|---|---|
| 18. J.P. Strehlow 8/17/94<br>J.P. Strehlow<br>Signature of EDT Originator / Date | 19. T. L. Moore T.L. Moore 8/22/94<br>Authorized Representative for Receiving Organization / Date | 20. R. K. Brown RK Brown 8-22-94<br>Cognizant/Project Engineer's Manager / Date | 21. DOE APPROVAL (if required)<br>Ltr. No.<br>[] Approved<br>[] Approved w/comments<br>[] Disapproved w/comments |

BD-7400-172-2 (07/91) GEF097

BD-7400-172-1 (02/89)

## RELEASE AUTHORIZATION

| | |
|---|---|
| **Document Number:** | WHC-SD-WM-DA-163, REV. 0 |
| **Document Title:** | STRUCTURAL ANALYSIS OF COLOR VIDEO CAMERA INSTALLATION ON TANK 241AW101 (2 VOLUMES) |
| **Release Date:** | 8/24/94 |

* * * * * * * * * * * * *

**This document was reviewed following the procedures described in WHC-CM-3-4 and is:**

**APPROVED FOR PUBLIC RELEASE**

* * * * * * * * * * * * *

**WHC Information Release Administration Specialist:**

N.L. Solis N.L. SOLIS 8/24/94

**(Signature)** **(Date)**

A-6001-400 (07/94) WEF256

# SUPPORTING DOCUMENT

1. Total Pages 315

2. Title

Structural Analysis of Color Video Camera Installation on Tank 241AW101 (2 volumes)

3. Number

WHC-SD-WM-DA-163

4. Rev No.

0

5. Key Words

Video
Camera
Color
Tank
Creston
241AW101
Analysis

APPROVED FOR PUBLIC RELEASE
V. Birkland 8/24/94

6. Author

Name: URS/John A. Blume & Associates, Engineers/
J. P. Strehlow

J.P. Strehlow
Signature

Organization/Charge Code 8D220 / N2030

7. Abstract

This supporting document provides the structural analysis of record for the color video camera assembly that will be installed in tank 241AW101. This analysis includes both deadweight and seismic evaluations. The camera assembly a purchased item, see CVI File 359426 for information on the camera.

8. PURPOSE AND USE OF DOCUMENT - This document was prepared for use within the U.S. Department of Energy and its contractors. It is to be used only to perform, direct, or integrate work under U.S. Department of Energy contracts. This document is not approved for public release until reviewed.

PATENT STATUS - This document copy, since it is transmitted in advance of patent clearance, is made available in confidence solely for use in performance of work under contracts with the U.S. Department of Energy. This document is not to be published nor its contents otherwise disseminated or used for purposes other than specified above before patent approval for such release or use has been secured, upon request, from the Patent Counsel, U.S. Department of Energy Field Office, Richland, WA.

DISCLAIMER - This report was prepared as an account of work sponsored by an agency of the United States Government. Neither the United States Government nor any agency thereof, nor any of their employees, nor any of their contractors, subcontractors or their employees, makes any warranty, express or implied, or assumes any legal liability or responsibility for the accuracy, completeness, or any third party's use or the results of such use of any information, apparatus, product, or process disclosed, or represents that its use would not infringe privately owned rights. Reference herein to any specific commercial product, process, or service by trade name, trademark, manufacturer, or otherwise, does not necessarily constitute or imply its endorsement, recommendation, or favoring by the United States Government or any agency thereof or its contractors or subcontractors. The views and opinions of authors expressed herein do not necessarily state or reflect those of the United States Government or any agency thereof.

9. Impact Level SQ

10. RELEASE STAMP

OFFICIAL RELEASE BY WHC (21)
DATE AUG 25 1994
Sta. 21

MASTER

A-6400-073 (11/91) (EF) WEF124

DISTRIBUTION OF THIS DOCUMENT IS UNLIMITED

# STRUCTURAL ANALYSIS OF COLOR VIDEO CAMERA ON TANK 241AW101

Volume I of II

Volume I - Report

Volume II - Calculations

# DESIGN VERIFICATION METHOD

The need for design verification has been reviewed with the method selected as indicated below:

| | |
|---|---|
| See Volume II | Independent Review |
| | Alternative Calculations |
| | Qualification Testing |
| | Formal Design Review |

J L Moore 8/22/94
Cognizant Project/Design Manager

SD # WHC-SD-WM-DA-163

EDT # 142746

DWG(S) #

## TRADEMARKS

The following trademarks are used in this report.

SAP90 is a trademark of Computers and Structures, Inc.,
1995 University Avenue, Berkely, California.

SAPSTL is a trademark of Computers and Structures, Inc.,
1995 University Avenue, Berkely, California.

WHC-SD-WM-DA-163
Vol. I, Rev. 0

# STRUCTURAL ANALYSIS OF CRESTON VIDEO CAMERA INSTALLATION ON TANK 241AW101

## VOLUME I of II - REPORT

prepared for
**Westinghouse Hanford Company**
**Richland, Washington**

prepared by
**URS/John A. Blume and Associates, Engineers**
**San Francisco, California**

**August 1994**

**URS**

# TABLE OF CONTENTS

| | | Page |
|---|---|---|
| COVER | | 1 |
| TABLE OF CONTENTS | | 2 |
| 1.0 | INTRODUCTION | 3 |
| 1.1 | Purpose and Scope | 3 |
| 1.2 | Structural Description of Creston Video Camera | 3 |
| 1.3 | Design Modifications | 3 |
| 1.4 | Design Codes, Standards and Specifications | 4 |
| 1.5 | As-Built Drawings | 4 |
| 2.0 | SEISMIC ANALYSIS | 5 |
| 2.1 | Seismic Load Criteria | 5 |
| 2.2 | Acceptance Criteria | 5 |
| 2.3 | Analysis Procedure and Stress Evaluation | 5 |
| 3.0 | REFERENCES | 7 |
| TABLES | | 8 |
| FIGURES | | 13 |

# 1.0 INTRODUCTION

## 1.1 Purpose and Scope

A video camera is planned to be installed on the radioactive storage tank 241AW101 at the DOE's Hanford Site in Richland, Washington. The camera will occupy the 20 inch port of the Multiport Flange riser which is to be installed on riser 5B of the tank 241AW101 (3,5,10).

The objective of the project reported herein was to perform a seismic analysis and evaluation of the structural components of the camera for a postulated Design Basis Earthquake (DBE) per the reference Structural Design Specification (SDS) document (6). The detail of supporting engineering calculations is documented in URS/Blume Calculation # 66481-01-CA-03 (1).

## 1.2 Structural Description of Creston Video Camera

The camera assembly consists of the camera unit itself and a steel frame, referred here as the camera mast structure, that holds the camera in position inside the tank 241AW101. The camera mast structure is secured to the 20 inch port of the Multiport Flange (MPF) riser by means of twenty 3/4 inch A307 bolts. The camera mast structure is a four legged stainless steel structure made of four 1.25 in diameter pipes that are welded at top , bottom and intermediate locations to 1/4 inch end plates. A discontinuous lacing using 1 x 3/16 flat steel ties the four corner pipes together. Figures 1-1, 1-2 and 1-3 show the upper mast, lower mast and the camera roll mechanism , respectively. The properties of the different components of the camera mast structure are summarized in Table 1-1. A set of preliminary shop drawings of the camera (2) were provided by WHC for this evaluation. A set of "as-built" drawings were also provided by WHC at a later date (11) for review (See also section 1.5).

## 1.3 Design Modifications

The original design of the camera mast, as shown in Figures 1-1 and 1-2, include flat steel bars for diagonal lacing members. The single 1x 3/16 flat steel diagonal members were found to be inadequate for compression and were replaced by a (tension only) cross bracing using the same size steel bars as shown in Figure 1-4.

## 1.4 Design Codes, Standards and Specifications

The design of the Creston Video Camera was evaluated in accordance with the following Design codes, Standards and specifications.

1.2.1 "Structural Design Specification for Installation of Creston Video Camera on Tanks 241AW101, 241SY101 and 241AN107", Westinghouse Hanford Company, July 1994.

1.2.2 "Standard Architectural-Civil Design Criteria," Document No. SDC-4.1, Hanford Plant Standards, Rev. 11. Department of Energy, Richland Washington (9).

1.2.3 "General Design Criteria," United States Department of Energy, DOE Order No. 6430.1A.

1.2.4 "Design and Evaluation Guidelines for Department of Energy Facilities Subject to Natural Phenomenon Hazards," UCRL-15910, June 1990.

1.2.5 "Nuclear Facilities - Steel Safety Related Structures for Design, Fabrication and Erection," ANSI/AISC N690-1984.

1.2.6 "Seismic Analysis of Safety-Related Nuclear Structures and Commentary on Standard for Seismic Analysis of Safety Related Nuclear Structures," ASCE Standard ASCE 4-86.

## 1.5 As-Built Drawings

The as-built drawings (11) of the Creston camera mast were reviewed. Minor differences between the as-built and the preliminary drawings are summarized in reference (1). The differences had no impact on the results of seismic evaluation from using the preliminary set of drawings.

# 2.0 SEISMIC ANALYSIS

## 2.1 Seismic Load Criteria

The camera mast structure supporting riser and its connection to the tank roof serve as a containment of radioactive material inside the tank and are classified as nonreactor safety class 2 structures (6). According to the specifications of reference 6, The MPF assembly and supporting 42 inch riser should be evaluated against application of normal loads and DBE loads as follows:

DL
DL+DBE
DL-DBE

Where

DL: Dead Loads

and

DBE: Design Basis Earthquake loads defined by a 5% damped ground surface acceleration response spectrum with a zero period acceleration (ZPA) of 0.12 g (6).

The reference (9) specifies that the MPF be subjected to DBE loads applied in three orthogonal direction simultaneously. The said reference also allows that the vertical component of the DBE ground motion be reduced by a factor of 2/3. To account for potential amplification of the vertical ground motion by the tank roof, reference (6) specifies that the vertical motion not to be scaled by the 2/3 factor.

## 2.2 Acceptance Criteria

The computed stresses in the Steel components of the MPF assembly were evaluated in accordance with the specifications of ANSI/AISC N690-84 (7). A summary of the applicable load combinations and corresponding stress allowables considered in this evaluation is tabulated in Table 2-1.

## 2.3 Analysis Procedure and Stress Evaluation

A finite element model of the camera mast structure, as shown in Figures 2-1 was developed using computer program SAP90 ( 8 ). To account for the flexibility of the suporting riser the stick model of the supporting Multiport Flang (MPF) structure and its supporting 42 inch riser,used for evaluation of MPF (10) in a separate study, was incorporated in the model of camera mast.

Frequency analyses of the camera model was first performed to extract the natural frequencies and mode shapes. Table 2-2 summarizes the properties of the first 20 modes of vibration for the camera models.

Response spectrum analysis of the model was then performed using the DBE free field acceleration response spectrum for 5% damping. The free field response spectrum was used because no tank roof response spectrum was available at the time of this evaluation. Reference (6) requires that the camera be subjected to the DBE spectra in three orthogonal directions simultaneously. To account for potential amplification of the vertical ground motion by the roof of the 241AW101 tank, the vertical spectra was not reduced by 2/3 factor.

The results from response spectra analyses were used to compute stresses in the components of the camera mast structure. Table 2-3 summarizes the computed stress ratio. As shown in Table 2-3, computed stress ratios for component of the camera are all within the specified limits with largest maximum stress ratios of 0.81 and 0.48 occurring at the weld connecting the lacing members to 1.25" SS pipes and welded connection between the light supports and the SS pipes, respectively.

The results from response spectrum analysis were also used to estimate the maximum lateral displacement of the camera mast structure to ensure that camera mast will not interact with any adjecent equipment. A plot of the deformed shape of the camera mast under DBE loads is shown on Figure 3-1. The maximum computed relative lateral displacement of 0.6 inches occures at the lowest nodal point of the mathematical model which represent the lowest point in the camera assembly structure.



AUG 18 '94 04:21PM U R S CONSULTANTS P.3

# 3.0 REFERENCES

1) " Seismic Analysis of Creston Camera Installation on Tanks 241AW101", Volume II of II, URS/Blume Calculation no. 66481-01-CA-3, rev 0, August 1994..

2) Creston Video Camera Mast Preliminary Piece Part Drawings, Received from WHC on 5/28/1994.

3) "Flanged Riser Installation, Tank 241-AW-101", WHC Drawings H-2-81102, SHT 1 of 1, rev 0.

4) (Not Used)

5) Selected 241AW Tank Farm drawings: H-2-70395, H-2-70396

6) "Structural Design Specification for Installation of Creston Video Camera on Tanks 241AW101, 241SY101 and 241AN107", Westinghouse Hanford Company, July 1994.

7) "Nuclear Facilities - Steel Safety Related Structures for Design, Fabrication and Erection," ANSI/AISC N690-1984.

8) "SAP90 - A Series of Computer Programs for Finite Element Analysis of Structures," Computers and Structures, Inc., Berkeley, California.

9) "Standard Architectural-Civil Design Criteria," Document No. SDC-4.1, Hanford Plant Standards, Rev. 11. Department of Energy, Richland Washington.

10) "Structural Analysis of Multiport Flange Installation on Tanks 241AW101 and 241SY101", URS/Blume Report to Westinghouse Hanford Company, July 1994.

11) "As-Built" Creston Video Camera Mast Piece Part Drawings, Received from WHC on 8/1/1994.

TABLE (1-1) Properties of Creston Camera Components for Tank 241AW101

| PART NO. | DESCRIPTION | SIZE | THICK | MATERIAL | YIELD STRESS Fy(ksi) | TENSILE STRENG Ft(ksi) |
|---|---|---|---|---|---|---|
| 42-1 | UPPER MAST ASSEMBLY | | | | | |
| 42-2 | SHIELDING PLATE | 22"D | 3" | CARBON STEEL | 36 | 58 |
| 42-3 | COVER PLATE | 22"D | 1/4" | 300 SERIES SS | 25 | 70 |
| 42-4 | MANIFOLD ASSEMBLY | | | | | |
| 42-5 | MANIFOLD TUBE | 22"D | 2" | 304 SS ASTM A312 | 35 | 85 |
| 42-6 | DIVIDING PLATE | 19.65x4" | 3/8" | 300 SERIES SS | 25 | 70 |
| 42-7 | FLANGE PLATE | 27.5"D | 3/4" | 304 SS ASTM A240 | 25 | 70 |
| 42-8 | 1 1/4 IPS PIPE | 107.9" | 0.14" | SCH 40 304 SS | 30 | 75 |
| 42-9 | PIPE WELDING DETAIL | | | | | |
| 42-10 | CROSS BRACE DETAIL | | | | | |
| 42-11 | FLANGE PLT GASKET | | 1/8" | GARLOCK 3000 | N/A | N/A |
| 42-12 | MATING PLT GASKET | | 1/8" | GARLOCK 3000 | N/A | N/A |
| 40-3 | MATING PLATE | 13"x13" | 1/2" | 300 SERIES SS | 25 | 70 |
| 40-5 | CROSS BRACE | 1"x15" | 3/16" | 300 SERIES SS FLA | 25 | 70 |
| 40-1 | LOWER MAST ASSEMBLY | | | | | |
| 40-2 | BOTTOM PLATE | 13"x13" | 1/2" | 300 SERIES SS | 25 | 70 |
| 40-3 | MATING PLATE | 13"x13" | 1/2" | 300 SERIES SS | 25 | 70 |
| 40-4 | LIGHT SUPPORT | 15.6"x1" | 3/8" | 300 SERIES SS FLA | 25 | 70 |
| 40-5 | CROSS BRACE | 1"x15" | 1/4" | 300 SERIES SS FLA | 25 | 70 |
| 40-6 | GAS TUBE DETAIL | | | | | |
| 40-7 | LIGHT FITTING DETAIL | | | | | |
| 40-8 | CROSS BRACE DETAIL | | | | | |
| 40-9 | PIPE WELDING DETAIL | | | | | |
| 40-10 | 1/2NPT NIPPLE MO | .84"D | 1/2" | 1/2 NPT x 2 1/2 SS NIPPLE | | N/A |
| 40-11 | 1 1/4 IPS PIPE | 86.0" | 0.14" | SCH 40 304 SS | 30 | 75 |
| 40-12 | 3/8 IPS GAS PIPE | .675"D x9.34" | 0.15" | 3/8 IPS SCH 40 304 SS PIPE | 25 | 75 |
| 40-13 | FITTING | | .4" | 300 SERIES SS | 25 | 75 |
| 40-14 | FITTING GASKET | | 1/8" | GARLOCK 3000 GA | N/A | N/A |

**TABLE (2-1)** - Load Combinations and allowable stress limits

| Structure Category | Load Category | Load Combinations | Stress Limit Coefficient (*) |
|---|---|---|---|
| Steel | Normal | DL | 1.0 |
| | Extreme | DL+DBE | 1.6 |

Where

DL = Dead Loads
DBE = Design Basis Earthquake load

(*) The shear stress allowables for steel and bolts are increased by 1.4.

All allowable stresses should not exceed 0.7 *Fu
where:
Fu = Ultimate tensile strength.

# TABLE (2-2) - Summary of Frequency Analysis

| MODE NUMBER | FREQUENCY (HZ) | PERIOD (SEC) |
|---|---|---|
| 1 | 3.182 | 0.31423 |
| 2 | 3.200 | 0.31247 |
| 3 | 10.475 | 0.09547 |
| 4 | 11.881 | 0.08417 |
| 5 | 14.510 | 0.06892 |
| 6 | 27.528 | 0.03633 |
| 7 | 27.548 | 0.03630 |
| 8 | 32.057 | 0.03119 |
| 9 | 38.304 | 0.02611 |
| 10 | 38.786 | 0.02578 |
| 11 | 39.243 | 0.02548 |
| 12 | 45.454 | 0.02200 |
| 13 | 50.228 | 0.01991 |
| 14 | 57.144 | 0.01750 |
| 15 | 72.505 | 0.01379 |
| 16 | 78.109 | 0.01280 |
| 17 | 112.010 | 0.00893 |
| 18 | 150.223 | 0.00666 |
| 19 | 186.701 | 0.00536 |
| 20 | 200.561 | 0.00499 |

| PARTICIPATING MASS - (percent) | | | | | | |
|---|---|---|---|---|---|---|
| MODE | X-DIR | Y-DIR | Z-DIR | X-SUM | Y-SUM | Z-SUM |
| 1 | 0.000 | 3.466 | 0.000 | 0.000 | 3.466 | 0.000 |
| 2 | 3.474 | 0.000 | 0.000 | 3.474 | 3.466 | 0.000 |
| 3 | 0.262 | 0.243 | 0.000 | 3.737 | 3.710 | 0.000 |
| 4 | 0.369 | 0.415 | 0.001 | 4.105 | 4.125 | 0.001 |
| 5 | 0.185 | 0.159 | 0.000 | 4.290 | 4.284 | 0.001 |
| 6 | 79.650 | 1.494 | 0.013 | 83.940 | 5.779 | 0.014 |
| 7 | 1.485 | 79.807 | 0.001 | 85.426 | 85.586 | 0.015 |
| 8 | 0.014 | 0.013 | 0.000 | 85.440 | 85.599 | 0.015 |
| 9 | 0.070 | 0.158 | 0.000 | 85.510 | 85.757 | 0.015 |
| 10 | 0.127 | 0.037 | 0.000 | 85.637 | 85.793 | 0.015 |
| 11 | 0.026 | 0.021 | 0.000 | 85.663 | 85.814 | 0.015 |
| 12 | 0.006 | 0.010 | 0.001 | 85.669 | 85.824 | 0.016 |
| 13 | 0.006 | 0.025 | 0.086 | 85.674 | 85.848 | 0.103 |
| 14 | 0.004 | 0.000 | 0.027 | 85.678 | 85.848 | 0.130 |
| 15 | 0.000 | 0.009 | 0.791 | 85.678 | 85.857 | 0.921 |
| 16 | 0.002 | 0.000 | 0.194 | 85.680 | 85.857 | 1.115 |
| 17 | 0.010 | 0.000 | 6.948 | 85.690 | 85.857 | 8.063 |
| 18 | 0.284 | 0.005 | 77.174 | 85.974 | 85.862 | 85.237 |
| 19 | 3.711 | 2.898 | 2.609 | 89.685 | 88.760 | 87.846 |
| 20 | 3.448 | 4.470 | 0.816 | 93.133 | 93.230 | 88.662 |

# TABLE (2-3) - Summary of Computed Stress Ratios

| PART NO. | DESCRIPTION | MAX STRESS (KSI) | ALLOWABLE STRESS (KSI) | STRESS RATIO |
|---|---|---|---|---|
| 42-1 | UPPER MAST ASSEMBLY | | | |
| 42-2 | SHIELDING PLATE | 0.0549 | 20.16 | 0.0027 |
| | BOLT w/Manifold Tube | 0.922 | 33.6 | 0.0274 |
| 42-3 | COVER PLATE | | | |
| 42-4 | MANIFOLD ASSEMBLY | | | |
| 42-5 | MANIFOLD TUBE | 0.89 | 14 | 0.0636 |
| | BOLT w/ Shielding Plate | | | |
| | WELD w/ Flange Plate | 0.974 | 10.5 | 0.0928 |
| 42-6 | DIVIDING PLATE | | | |
| 42-7 | FLANGE PLATE | 2.94 | 14 | 0.2100 |
| | BOLT w/ 20" Riser | .851k | 30.4k | 0.0280 |
| | WELD w/ SS Pipes | 0.758 | 2.625 | 0.2888 |
| 42-8 | 1 1/4 IPS PIPE | | | 0.2200 |
| 42-9 | PIPE WELDING DETAIL | | | |
| 42-10 | CROSS BRACE DETAIL | | | |
| 42-11 | FLANGE PLT GASKET | | | |
| 42-12 | MATING PLT GASKET | | | |
| 40-3 | MATING PLATE | 2.6 | 14 | 0.1857 |
| | WELD w/ SS Pipes | 0.312 | 2.625 | 0.1189 |
| 40-5 | CROSS BRACE | | | 0.3560 |
| | WELD w/ SS Pipes | 1.968 | 5.25 | 0.3749 |
| 40-1 | LOWER MAST ASSEMBLY | | | |
| 42-2 | BOTTOM PLATE | 0.0157 | 14 | 0.0011 |
| | WELD w/ SS Pipes | 0.541 | 2.625 | 0.2061 |
| 40-3 | MATING PLATE | (SEE ABOVE) | | |
| 40-4 | LIGHT SUPPORT | | | 0.1670 |
| | WELD w/ SS Pipes | 0.75 | 3.5 | 0.2143 |
| 40-5 | CROSS BRACE | (SEE ABOVE) | | |
| 40-6 | GAS TUBE DETAIL | | | |
| 40-7 | LIGHT FITTING DETAIL | | | |
| 40-8 | CROSS BRACE DETAIL | | | |
| 40-9 | PIPE WELDING DETAIL | | | |
| 40-10 | 1/2NPT NIPPLE MODS | | | |
| 40-11 | 1 1/4 IPS PIPE | | | 0.1450 |
| 40-12 | 3/8 IPS GAS PIPE | | | 0.0670 |
| | WELD w/ SS Pipes | 0.149 | 3.5 | 0.0426 |
| 40-13 | FITTING | | | |
| 40-14 | FITTING GASKET | | | |

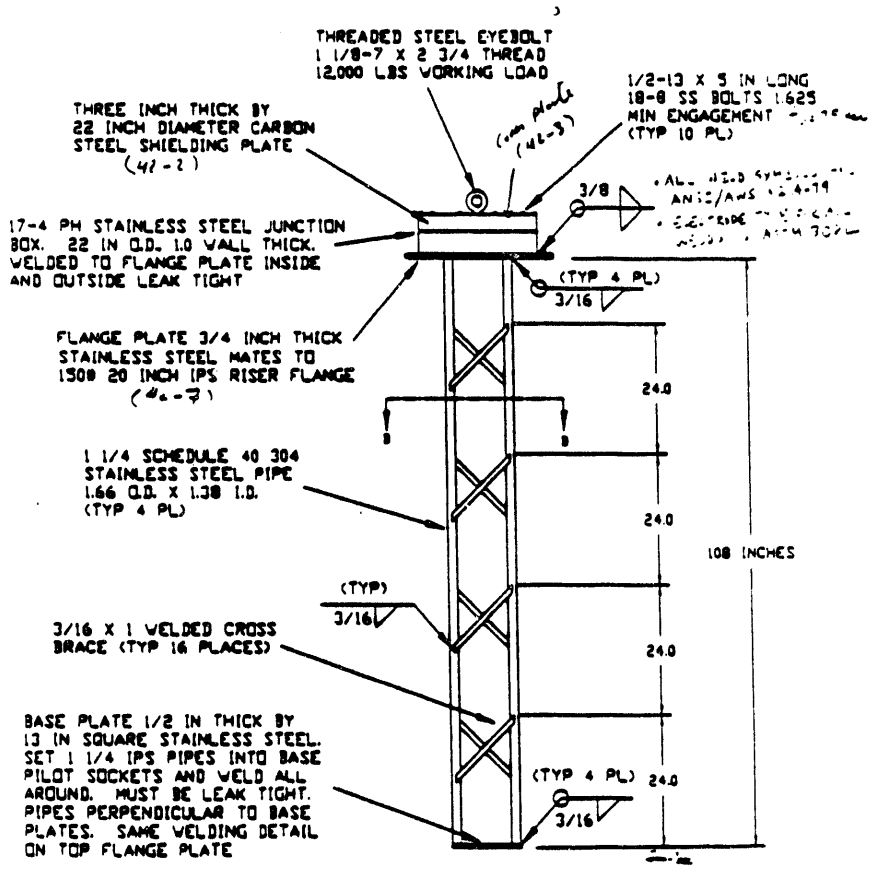


CRESTONE PRODUCTS, INC.
4175 W. QUAIL RIDGE DR.
BOISE, ID 83703
TEL 208-368-7998
FAX 208-368-7999

Figure (1-1) - Structure of Upper Mast Assembly

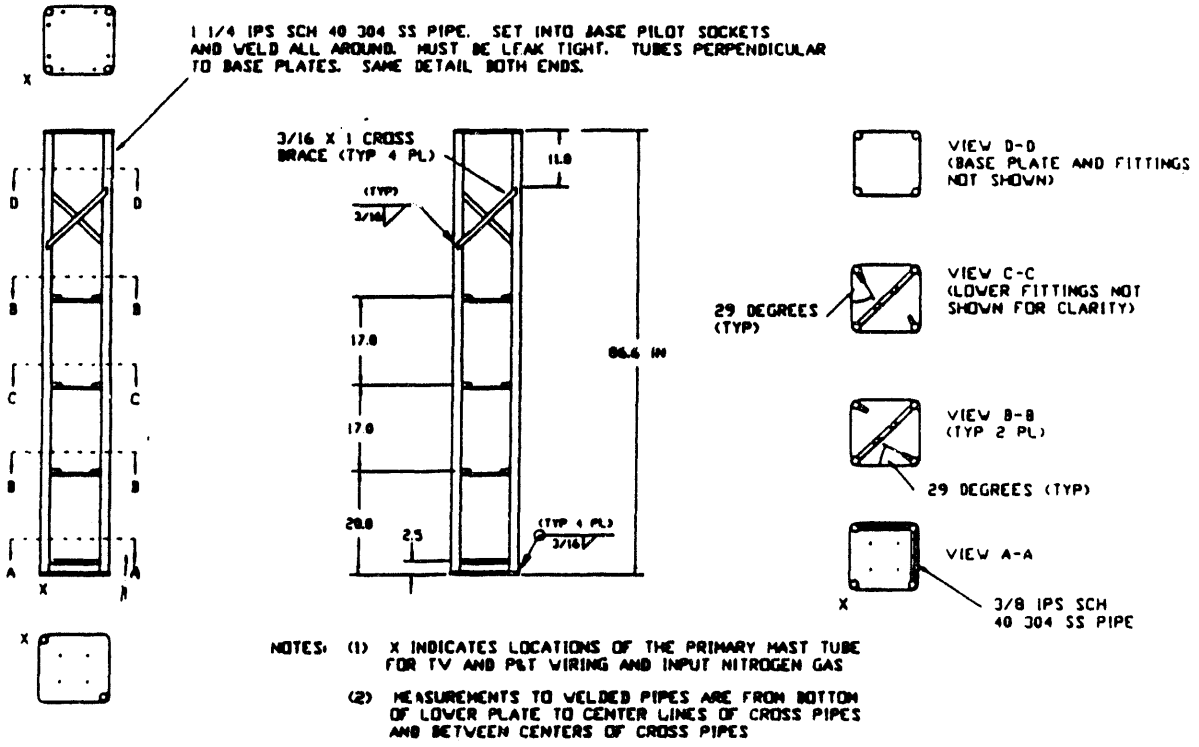


Figure (1-2) - Structure of Lower Mast Assembly

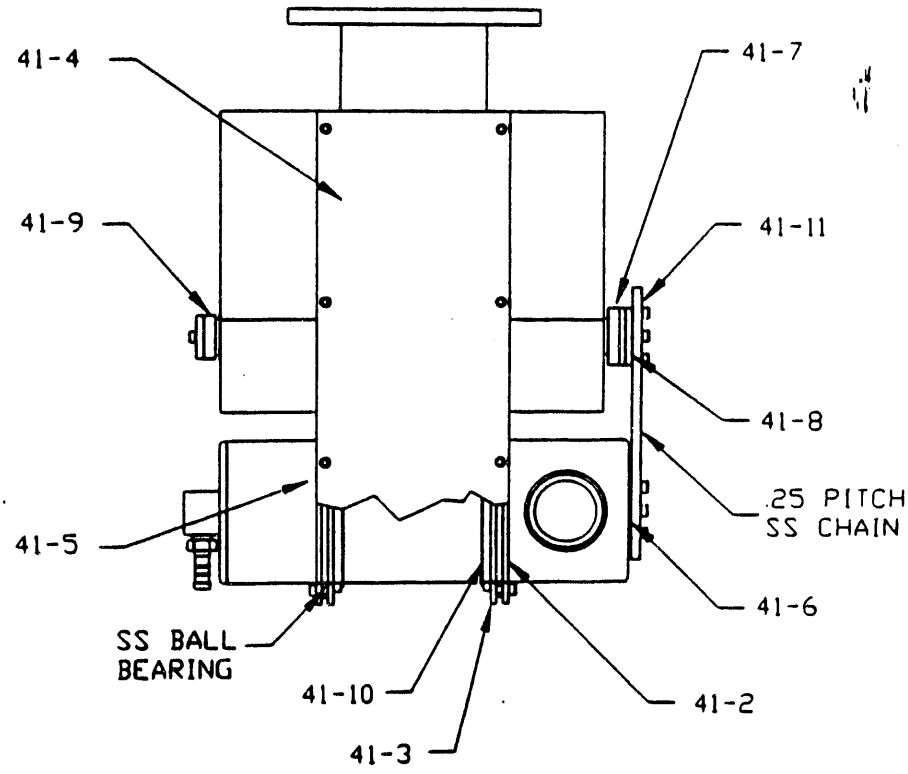


Figure (1-3) - Camera Roll Assembly

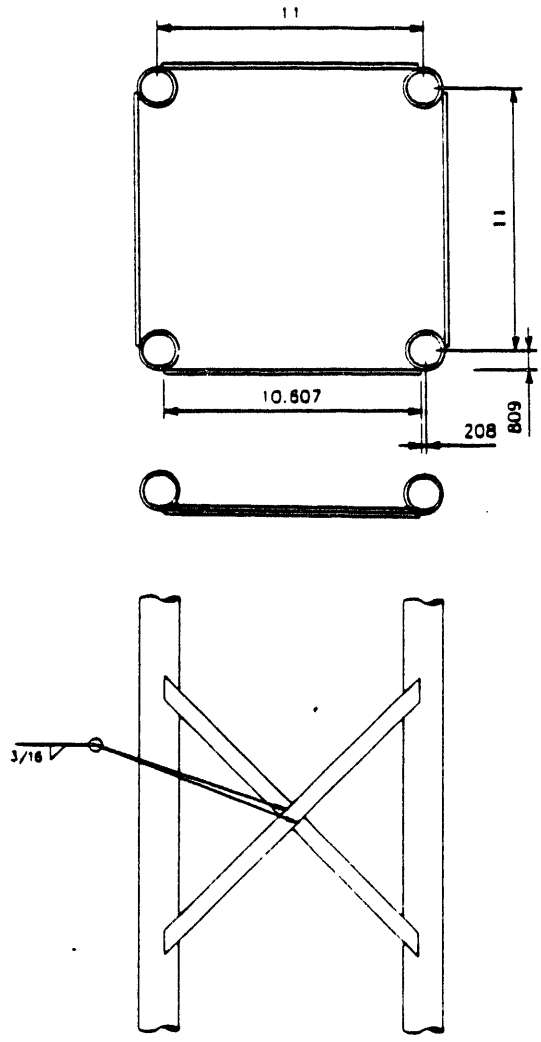


Figure (1-4) - Modification to Lacing of the Camera Mast

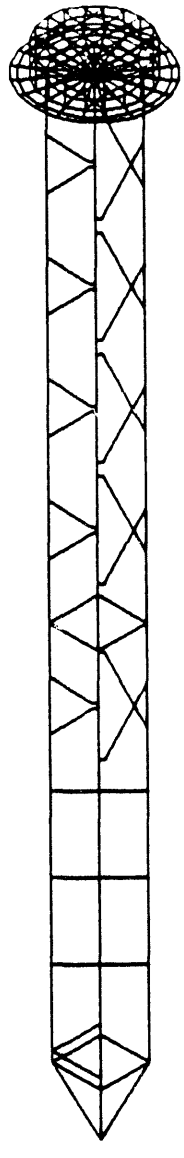

**Figure (2-1)** - Finite Element Model of Camera Mast Structure

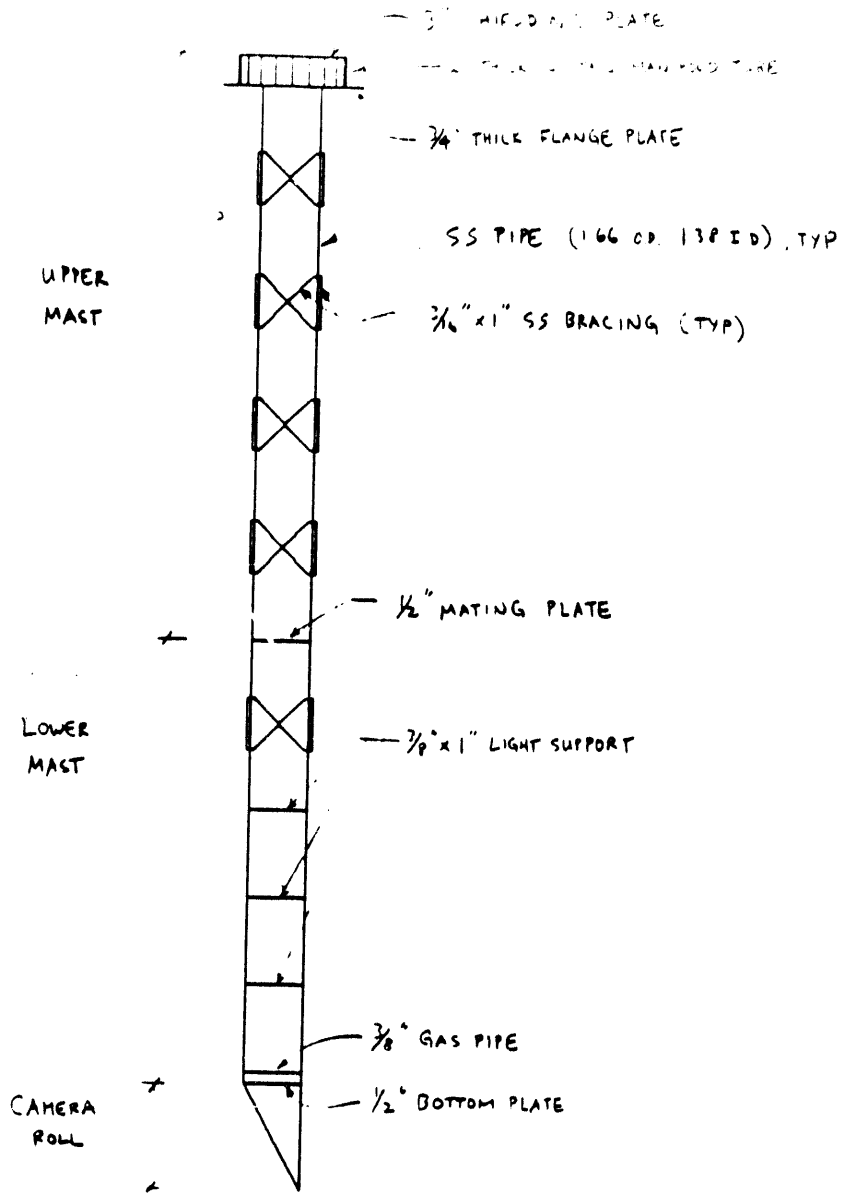


**Figure (2-2)** - Components of the Finite Element Model of Camera

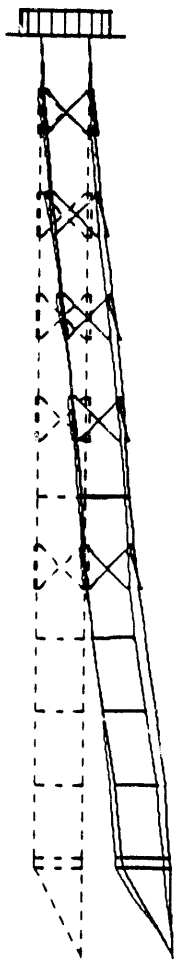

**Figure (3-1)** - Deflected Shape of Camera Mast Model (DBE)

ATTACHMENT 1

# STRUCTURAL DESIGN SPECIFICATION FOR VIDEO CAMERAS IN TANKS 241AW101, 241SY101, AND 241AN107

WHC-SD-WM-DA-163
Vol. I, Rev. 0

# STRUCTURAL DESIGN SPECIFICATION FOR VIDEO CAMERAS IN TANKS 241AW101, 241SY101, AND 241AN107

July, 1994

Prepared by J.P. Strehlow

## CONTENTS

1.0 INTRODUCTION . . . . . 1
1.1 Scope . . . . . 1
1.2 Jurisdictional Boundary . . . . . 2
1.3 Definitions . . . . . 2

2.0 GENERAL REQUIREMENTS . . . . . 3
2.1 Analysis Requirements . . . . . 3
2.2 Structural Report . . . . . 4
2.3 Conflicting Requirements . . . . . 5

3.0 DESIGN-BASIS LOADS . . . . . 6
3.1 Dead Load (D) . . . . . 6
3.2 Design-Basis Earthquake Load . . . . . 6
3.3 Design-Basis Wind Load (W) . . . . . 6
3.4 Design-Basis Ashfall Load (A) . . . . . 6
3.5 Design-Basis Snow Load (SN) . . . . . 6

4.0 BEYOND-DESIGN-BASIS LOADS . . . . . 7
4.1 Hydrogen Burn Load (H2) (Tank 241SY101 only) . . . . . 7

5.0 TRANSPORTATION AND NORMAL INSTALLATION LOADS . . . . . 8

6.0 LOAD COMBINATIONS. . . . . 9
6.1 Design-Basis Load Combination for the Video Camera Assembly . 9
6.2 Modal and Directional Combination . . . . . 9
6.3 Beyond-Design-Basis Load Combination . . . . . 9
6.4 Transportation Load Combination . . . . . 9
6.5 Normal Installation Load Combination . . . . . 9

7.0 EVALUATION AND ACCEPTANCE CRITERIA . . . . . 10
7.1 Design-Basis Acceptance Criteria . . . . . 10
7.2 Beyond-Design-Basis Acceptance Criteria . . . . . 10

8.0 REFERENCES . . . . . 11

# STRUCTURAL DESIGN SPECIFICATION FOR VIDEO CAMERAS IN TANKS 241AW101, 241SY101, AND 241AN107

## 1.0 INTRODUCTION

This document establishes the requirements and guidelines for performing the structural evaluation of the video cameras that will be installed on tanks 241AW101, 241SY101, and 241AN107. The video camera on tank 241AW101 will be installed in a multiport flange (MPF) assembly (H-2-818144) while the video camera on tank 241SY101 will be installed in the multi-port riser (MPR) assembly (H-2-821101). The video camera on tank 241AN107 will be installed directly on the existing 12-in. riser 7A. This document addresses scope of the analysis and the loading and the load cases that are to be analyzed and establishes the acceptance criteria for evaluating the results of the structural analysis.

## 1.1 Scope

The scope of this document includes the following:

- Identification of the design requirements applicable to the video camera design from the Hanford Plant Standard, SDC-4.1 (Reference 8.2), U.S. Department of Energy Order No. 6430.1A (Reference 8.3) and UCRL-15910 (Reference 8.4), documents

- Definition of the various design-basis, beyond-design-basis, transportation, and normal installation loads to be considered in the structural evaluation of the video cameras and the loads that the video cameras will have on their supporting structure

- Definition of the loads and load combinations

- Provision of acceptance criteria to serve as the basis for qualification of the video cameras under design-basis and beyond-design-basis loads.

## 1.2 Jurisdictional Boundary

This structural design specification covers the entire video camera assembly, including the bolts that connect it to either the MPF, MPR, or existing tank riser. Evaluation of the effect that the reaction forces and moments from the AW101 and SY101 video camera assemblies will have on their supporting structures, the MPF or the MPR, are not within the scope of the camera structural analysis. However, these loads shall be reported so that an evaluation of their effect can be performed and incorporated in the structural analysis for these support structures. The effect that the AN107 camera will have on it's support structure, the existing tank riser 7A, is within the scope of the camera structural analysis.

## 1.3 Definitions

| | |
|---|---|
| Shall Consider: | Requires a referable assessment with discussion of rationale when an alternate method is selected. |
| Shall: | Denotes a requirement. |
| Must: | Denotes a requirement. |
| Should: | Denotes a recommendation. |

# 2.0 GENERAL REQUIREMENTS

## 2.1 Analysis Requirements

SDC-4.1 (Reference 8.2) provides the criteria for establishing the design loads for facilities. These criteria are based on four safety classifications (Safety Class 1 through 4) for the structure, system and component. The safety classes can be correlated respectively to the High-Hazard, Moderate-Hazard, Low-Hazard/Important and General-Use usage categories defined in the 1990 version of UCRL-15910 (Reference 8.4) for non-reactor facilities. In the 1992 draft version of UCRL-15910, these descriptive classifications have been modified, in reverse order, to Performance Categories 1 through 4. Safety Class 1 structures, systems, and components are those that perform a function required for nuclear criticality safety or whose failure might result in a significant release of radioactive, hazardous, or toxic materials as defined by DOE Order 6430.1A, Division 13, as it relates to non-reactor nuclear facilities.

In addition to normal loads, non-reactor Safety Class 1 structures, systems and components are to withstand the effects of extreme environmental loads including design-basis earthquake (DBE), design-basis wind (DBW), design-basis flood, volcanic eruptions and other abnormal loads considered on a case by case basis. Non-reactor Safety Class 2, 3 and 4 structures, systems, and components are those that are not Safety Class 1; these are specified respectively as onsite safety-related, occupational safety-related and non-safety related items.

Tanks 241AW101, 241SY101, and 241AN107 are non-reactor Safety Class 1 structures. The risers and the supporting structures for the video cameras, the MPF, and MPR, are non-reactor Safety Class 2 structures. The video cameras that will be installed in these tanks will also be considered non-reactor Safety Class 2 components for the purpose of these structural analyses because they transfer reaction loads to Safety Class 2 structures and because their connection flange will provide containment of radioactive and toxic materials under normal operating conditions.

Section 0111-99.0.4 of Reference 8.3 states that "the adequacy of systems, components, and structures to withstand a seismic event shall be verified by a dynamic analysis, except where it can be demonstrated that the use of a simplified approach, such as a static load method, component testing, or a combination of testing and analysis provides assurance of adequate seismic design. The ratio of vertical-to-horizontal acceleration shall be two-thirds, unless site-specific data justify the use of a different ratio." Therefore, the MPF together with the tank and the other supporting structures shall be evaluated by dynamic analysis for DBE loads. A response spectrum method of structural analysis is an acceptable method of analysis for this purpose. Section 0111-99.0.8 of Reference 8.3 states that "Safety class structures and structural members shall be designed to resist the appropriate load combinations provided in UCRL-15910." Therefore, the

load combinations provided in Section 6.0 of this document shall be based on UCRL-15910.

Section 0111-99.0.8 of Reference 8.3 also states that "Safety class steel structures shall meet the design, fabrication, and erection requirements of ANSI/AISC N690 for new construction or original (or equivalent) codes for existing construction providing the margin of safety of the overall facility is maintained." For the video camera assemblies, the structural evaluation shall be based on ANSI/AISC N690-84 (Reference 8.6) requirements.

Section 0111-2.4.1 of Reference 8.3 states that "The structural frame and exterior components of all buildings, signs, tanks, towers, and other exposed structures shall be designed to resist pressures due to wind assumed to act from any direction. Partial wind loading shall be considered if it produces a more severe effect." Therefore, wind load shall be included as one of the design-basis loads in the design and analysis of the video camera assembly. The wind load calculations shall be in accordance with procedures in ASCE 7-88 (Reference 8.7) with the basic wind speed being obtained from SDC-4.1. In addition to the DBW load, the design-basis ashfall and snow loads shall be included in the design and analysis of the MPF assembly.

Additional requirements that shall be factored into the structural evaluation of the video camera assembly.

- The video camera assembly installed in tank 241SY101 shall not become a missile if there is a hydrogen burn inside the tank (tank 241SY101 only).

- All structural members designed to the requirements of this Structural Design Specification must be fabricated from a material that can be characterized in terms of the material designations found in the *ASME Boiler and Pressure Vessel Code*, Section VIII (Reference 8.8), ANSI/AISC N690 or a similar nationally recognized, widely accepted industry design standard. Where possible lightweight, high-strength material shall be selected to minimize loads applied to the tank dome.

The transnational and rotational stiffness in the orthogonal directions at support point for the video camera assembly shall be considered in the structural analyses of the video camera assemblies. For the AW101 and SY101 cameras these stiffnesses can be obtained from the MPF or MPR structural analysis report. These stiffnesses shall be used in the camera analysis if they cause an increase in either the camera stresses or the reaction forces and moments transmitted to the support structure.

## 2.2 Structural Report

All engineering reports documenting the satisfaction of this specification and the acceptance criteria shall be prepared in accordance with the requirements of WHC *Standard Engineering Practices*, EP-1.12 (Reference 8.9). All calculations supporting the engineering

report shall be prepared in accordance with the requirements of WHC *Standard Engineering Practices*, EP-1.11 (Reference 8.10). Changes to engineering reports shall be performed in accordance with the requirements of WHC *Standard Engineering Practices*, EP-2.2 (Reference 8.11). The design verification of engineering reports and the supporting documents shall be performed in accordance with the requirements of WHC *Standard Engineering Practices*, EP-4.1 (Reference 8.12). All engineering reports submitted to WHC Engineering shall be subjected to independent review. Submittal to WHC shall include, in hard-copy form, all engineering reports, supporting documents, and computer output associated with the supporting documents. The submittal shall also include input run-streams of all computer models either on a 5.25- or a 3.5-in. floppy diskette.

The reactions (forces and moments) that the video camera assembly imposes on its support structure, either the MPF or the MPR, shall be reported for both the normal and the extreme load combinations.

The maximum lateral deflection of the camera for either of the load combinations shall be reported. This lateral deflection shall be determined at an elevation corresponding to the bottom of the 42-in. riser. This information will be used to ensure that sufficient clearance is maintained between the camera and the riser.

## 2.3 Conflicting Requirements

If requirements imposed by this Structural Design Specification conflict with requirements listed in another specification applicable to the MPF, The conflict shall be brought to the attention of the WHC Engineering Department for resolution.

## 3.0 DESIGN-BASIS LOADS

### 3.1 Dead Load (D)

Dead load for the video camera assembly shall include the total weight of all individual components that form the MPF assembly.

### 3.2 Design-Basis Earthquake Load

The DBE load shall be included as a design-basis extreme load. The response spectra curves provided in SDC 4.1 (Reference 8.2) shall be used to determine the DBE loads. The DBE response spectra curves for a 0.12 *g* zero-period acceleration shall be used to determine seismic loads on the video camera assembly. The required damping for the video camera assembly shall be 5%, as specified in SDC 4.1.

To account for possible amplification of the tank dome in the vertical direction, the full horizontal response spectra shall be applied as the vertical response spectra for components attached to the tank dome.

### 3.3 Design-Basis Wind Load (W)

The video cameras installed over the 42-in. risers on tanks 241AW101 and 241SY101 and on the existing 12-in. riser on tank 241AN107 are exposed to environmental loads such as the DBW. However, in each case the video camera assembly does not extend above its support structure far enough to be exposed to significant wind loads. Therefore, the wind load on the projected surface of the video camera assembly can be neglected.

### 3.4 Design-Basis Ashfall Load (A)

The design-basis ashfall load defined in SDC 4.1 will have a negligible effect on the video camera assembly. Therefore, this load can be neglected.

### 3.5 Design-Basis Snow Load (SN)

The design-basis snow load defined in SDC 4.1 will have a negligible effect on the video camera assembly. Therefore, it can be neglected.

# 4.0 BEYOND-DESIGN-BASIS LOADS

## 4.1 Hydrogen Burn Load (H2) (Tank 241SY101 only)

The waste within tank 241SY101 generates hydrogen and nitrous oxide gases. The concentration of these gases inside the tank can reach flammability levels during episodic releases of these gases from the waste during a waste rollover. This situation creates the possibility of a hydrogen burn. This event is referred to as the maximum expected burp (MEB) burn. Several burn events have been evaluated including a 1.25 MEB and a best-estimate MEB. For this analysis the transient pressure loadings and the tank dome displacement/acceleration time histories that correspond to the 1.25 MEB (Reference 8.15) shall be applied.

## 5.0 TRANSPORTATION AND NORMAL INSTALLATION LOADS

The party who installs the video camera assembly shall evaluate it for various transportation loads. The installer shall be responsible for providing adequate support to the assembly during transportation to prevent physical damage or operational impairment. Road shipment shock and vibration forces in accordance with Federal Highway Administration, DOT 49 Code of Federal Regulations (CFR) 393.100, are to be assumed during transportation (Reference 8.16).

The party who installs the video camera assembly shall be responsible for providing adequate rigging and support for the assembly, to assure that it is not damaged during normal installation. Installation procedures shall be provided to WHC cognizant engineer for review and comment in accordance with the schedule established by Project Management. The installation procedure shall contain a listing of all equipment to be used. The estimated total weight of all equipment and personnel to be located above the tank at any one time during the installation shall be included in the procedure. The estimated total weight shall be reported to Project Management.

Lifting lugs or components on the video camera assembly shall be evaluated for a deadweight load with a dynamic amplification load factor of 2.0 applied to the load. Stresses within the lifting lugs and their attachment welds shall satisfy the requirements of ANSI N690-1984 (Reference 8.6) for a normal loads. If commercial components are used, the total lifting load shall be less that the maximum allowable working load published by the manufacture.

## 6.0 LOAD COMBINATIONS.

### 6.1 Design-Basis Load Combination for the Video Camera Assembly

The following load combinations shall be used in evaluating the video camera assembly.

| Category | Load Combination | Stress Limit* Coefficient |
|---|---|---|
| Normal | D | 1.0 |
| Extreme | D + [DBE] | 1.6 |

Where D = dead load
DBE = design-basis earthquake load

* For items subject to the requirements of ANSI N690-1984.

### 6.2 Modal and Directional Combination

A three-directional response spectrum analysis with DBE loading shall be performed to obtain the structural response of the video camera assembly to the earthquake loading. The Grouping Method as stated in the U.S. Nuclear Regulatory Commission's (NRC) Guide 1.92 (Reference 8.17) or the complete quadratic combination (CQC) method shall be used to perform the modal combination. The responses for each of the three directions of seismic data shall be combined by the SRSS method. The missing mass effect shall be accounted for in the total response of the video camera assembly if the number of modes included in the analysis are not sufficient to insure that 90% or more of the total system response has been achieved.

### 6.3 Beyond-Design-Basis Load Combination

The stresses in the video camera assembly and its connection bolts that are caused by the beyond-design-basis load need not be combined with those stresses in the video camera assembly resulting from design-basis loads.

### 6.4 Transportation Load Combination

The stresses in the video camera assembly resulting from transportation loads need not be combined with any other design-basis normal loads.

### 6.5 Normal Installation Load Combination

The stresses in the video camera assembly during normal installation need not be combined with any other design-basis normal loads

# 7.0 EVALUATION AND ACCEPTANCE CRITERIA

## 7.1 Design-Basis Acceptance Criteria

The stresses in the video camera assembly and its connection bolts are developed by the external loadings imposed on the assembly. Therefore, these stresses are of a primary nature and they are not self-limiting. The primary stresses and shall satisfy the requirements of ANSI N690-1984 (Reference 8.6).

Stress-limit coefficients shall be applied to the stress allowable as shown in References 8.6 and 8.19. In accordance with Reference 8.6, the stress allowable after applying the stress limit coefficient shall not exceed 0.7 times $F_u$ in axial tension nor 0.7 $F_u$ times the ratio Z/S for tension plus bending. Here, $F_u$ is the ultimate stress of the material, Z is the plastic section modulus of the member, and S is the elastic section modulus of the member. Alternatively, for the extreme load case, the computed stress can reach the member plastic capacity of the member, which is computed as the shape factor times the material yield stress of the member.

Stress limit coefficients in shear for extreme and abnormal load conditions shall be limited to 1.4.

## 7.2 Beyond-Design-Basis Acceptance Criteria

The acceptance criterion applicable to the hydrogen burn is that the video camera assembly shall not become a missile.

## 8.0 REFERENCES

8.1 (Not used)

8.2 *Standard Architectural-Civil Design Criteria*, SDC-4.1, Rev. 11, U.S. Department of Energy, Richland Operations Office, Richland, Washington.

8.3 *General Design Criteria*, DOE Order 6430.1A, U.S. Department of Energy, Washington, D.C.

8.4 Robert P. Kennedy, et al., *Design and Evaluation Guidelines for Department of Energy Facilities Subjected to Natural Phenomena Hazards*, UCRL-15910, June 1990.

8.5 "Code Requirements for Nuclear Safety Related Concrete Structures (ACI 349-90)," American Concrete Institute, Detroit, Michigan.

8.6 "Nuclear Facilities - Steel Safety Related Structures for Design Fabrication and Erection," ANSI/AISC N690-1984, CITY, STATE, 1984.

8.7 "Minimum Design Loads for Buildings and Other Structures," ASCE Standard, ASCE 7-88 (Formerly ANSI A58.1), American Society of Civil Engineers, CITY, STATE, 1990.

8.8 "Boiler and Pressure Vessel Code," Section VIII, Division 2, Appendix 5, American Society of Mechanical Engineers, New York, New York, 1992.

8.9 "Preparation of Design Analysis Reports, ASME Design Reports, and ASME Load Capacity Data Sheets," EP-1.11, Rev. 3, *Standard Engineering Practices*, WHC-CM-6-1, Westinghouse Hanford Company, Richland, Washington.

8.10 "Supporting Documents," *Standard Engineering Practices*, EP-1.12, Rev. 7, WHC-CM-6-1, EP-1.12, Westinghouse Hanford Company, Richland, Washington.

8.11 "Engineering Document Change Control," EP-2.2, Rev. 6, *Standard Engineering Practices*, WHC-CM-6-1, Westinghouse Hanford Company, Richland, Washington.

8.12 "Design Verification Requirements," EP-4.1, Rev. 4, *Standard Engineering Practices*, WHC-CM-6-1, Westinghouse Hanford Company, Richland, Washington.

8.13 N. M. Newmark, and W. J. Hall, "Development of Criteria for Seismic Review of Selected Nuclear Power Plants," U.S. Nuclear Regulatory Commission Regulatory Report, NUREG/CR-0098, Washington, D.C., 1978.

8.14 J. N. Edwards, "A Safety Assessment for Proposed Pump Mixing Operations to Mitigate Episodic Gas Releases in Tank SY-101," LA-UR-92-3196, Rev. 8, 1994, Los Alamos National Laboratory, Los Alamos, New Mexico.

8.15 E. A., Rodriguez, "Structural Analysis of HLW Tank SY-101 Subjected to Burn Pressure Transient with Spark Ignition at Dome Apex," Calc. Note PSA-CN-WT-SA-ST-062, Rev. 0, 1994, Los Alamos National Laboratory, Los Alamos, New Mexico.

8.16 Federal Highway Administration, DOT 49, Code of Federal Regulations 393.100, as amended.

8.17 "Combining Modal Responses and Spatial Components in Seismic Response Analysis," U.S. Nuclear Regulatory Commission Regulatory Guide 1.92, Washington, D.C., February 1976.

8.18 "Standard Architectural-Civil Design Criteria - Design and Installation of Expansion Anchors," Hanford Plant Standard SDC-4.2, Rev. 0, U.S. Department of Energy, Richland Operations Office, Richland, Washington.

8.19 *Manual of Steel Construction*, American Institute of Steel Construction, 9th Edition, CITY, STATE.

# STRUCTURAL ANALYSIS OF COLOR VIDEO CAMERA INSTALLATION ON TANK 241AW101

Volume II of II

Volume I - Report

Volume II - Calculations

## INDEPENDENT REVIEW

Document Reviewed Structural Analysis of Color Video Camera Installation Tank 241AW101

Author URS/John A. Blume and Associates, Engineering Report No. WHC-SD-WM-DA-163 Rev. 0 EDT No. 142746

The subject document has been reviewed by the undersigned. The reviewer reviewed and verified the following items as applicable [EP.4.1].

- Engineering Specification
- Design Input
- Basic Assumption
- Approach/Design Methodology
- Related Information
- Conclusion/Result Interpretation

ADVENT Engineering Services, Inc. R. GALICA — Reviewer

3/17/94 — Date

See Attachment 1 for review comment resolutions.

# STRUCTURAL ANALYSIS OF CRESTON VIDEO CAMERA INSTALLATION ON TANK 241AW101

## VOLUME II - CALCULATIONS

prepared for
**Westinghouse Hanford Company**
**Richland, Washington**

prepared by
**URS/John A. Blume and Associates, Engineers**
**San Francisco, California**

**August 1994**

**URS**

**URS Consultants, Inc.**
**CALCULATION COVER SHEET**

Client: Westinghouse Hanford Company Project Name: WHC MPF Evaluation

Project/Calculation Number: 43-66481-01-CA-3

Title: "Seismic Analysis of Creston Video Camera Installation on Tank241AW101"

Total number of pages (including cover sheet):

Total number of computer runs:

Prepared by: Peter Lum Date: August 17, 1994

Checked by: Kerry McCoy, Rabieh Khoury Date: August 17, 1994

---

Description and Purpose:

Stated Within

---

Design bases/references/assumptions:

Stated Within

---

Remarks/conclusions:

Stated Within

Calculation Approved by: Bahram Mosaddad August 17, 1994
Project Manager/Date

| Revision No.: | Description of Revision: | Approved by: |
|---|---|---|
| 0 | Original | Bahram Mosaddad 8/17/94 |
| | | |
| | | |

Project Manager/Date

QAM 5.6 08/15/93

OUTLINE OF DOCUMENTATION SAP90/SAPSTL ANALYSIS PACKAGE

1. Criteria
   - 1.1 Project Description
   - 1.2 Analysis Criteria
   - 1.3 Analysis Approach
   - 1.4 Quality Objectives

2. Computer Model
   - 2.1 General Discussion
   - 2.2 SAP90 input parameters
   - 2.3 SAP90 Model sketches
   - 2.4 SAPSTL input parameters

3. Loads
   - 3.1 General Discussion
   - 3.2 Camera Assembly Dead Load
   - 3.3 Response Spectra

4. SAP90/SAPSTL Input Data
   - 4.1 General Discussion
   - 4.2 Input data files for SAP90
   - 4.3 Input data files for SAPSTL

5. SAP90/SAPSTL Output files
   - 5.1 General Discussion
   - 5.2 Output files for SAP90
   - 5.3 Output files for SAPSTL
   - 5.4 Selective graphical output

6. Check Element Stresses
   - 6.1 General Discussion
   - 6.2 Check Shell Element Stresses
   - 6.3 Check Beam Element Stresses

7. Check Bolt and Weld Connections
   - 7.1 General Discussion
   - 7.2 Check Bolt Connection
   - 7.3 Check Weld Connection

8. Check Displacements
   - 8.1 General Discussion
   - 8.2 Summary of Displacements

9. Summary
   - 9.1 Summary of Stress Ratios
   - 9.2 Overall Analysis Conservatism

| | |
|---|---|
| Attachment A | Preliminary Camera Assembly Drawings from Crestone Products, Inc. |
| Attachment B | (not used) |
| Attachment C | Allowable Stresses |
| Attachment D | Letter from WHC to URS/Blume dated May 25, 1994 which contains the information for the multiport flange and video camera analysis |
| Attachment E | List of "As-Built" Camera Assembly Drawings from Crestone Products, Inc dated 6/18/94, received by URS/Blume on 8/1/94, and evaluation of changes between preliminary and "As-Built" drawings. |

## SECTION 1. CRITERIA

### 1.1 Project Description

A new camera assembly is designed for installation on the radioactive waste storage tank 241AW101. The camera will occupy the 20" port of the Multi Port Flange (MPF) assembly that is going to be installed on top of an existing 42" riser of the storage tank. See Attachment A for detail drawings of the Creston camera assembly.

The objective of this project was to prepare the Structural Analysis of Record for the installation of the proposed camera assembly on the tank 241AW101. This effort included the following:

- Determine the strength of the camera support assembly and its connection of the flange of the 20" port and determine if the existing MPF is adequate to resist the dead load and DBE level seismic load (SDC 4.1 Rev. 12, "Design Loads for Facilities", Non-reactor Safety Class 2)

- Determine the minimum clearance that needs to be provided for the installed camera to avoid interference with the riser and/or adjacent equipment already installed.

### 1.2 Analysis Criteria

Primarily, the analysis criteria are based upon the following references as standards:

- Structural Design Specification for Video Cameras in Tanks 241AW101, 241SY101, and 241AN107, July 1994.

- ANSI/AISC N690-1984 "American National Standard, Nuclear Facilities --- Steel safety-related structures for Design Fabrication and Erection"

Other references used are:

- ASTM Standards in Building Codes, 29th Edition, 1992.

- AISC "Manual of Steel Construction", 9th Edition, Chicago, Illinois, 1989.

Load combinations and applicable stress limit coefficients are:

| | | | Load Combination | Stress Limit Coefficients |
|---|---|---|---|---|
| • | Normal | Dead Load (DL) | DL | 1.0 |
| • | Extreme | DL + Seismic (EQ) | DL + EQ | 1.6 |
| | | | DL - EQ | 1.6 |
| | | For shear | DL + EQ | 1.4 |
| | | | DL - EQ | 1.4 |

The camera assembly is categorized as "Safety Class 2" structure.

## 1.3 Analysis Approach

The general-purpose elastic structural computer software, SAP90, is used for analysis (refer to SAP90 version 5.4, computer porgram vrification, 7/27/93, URS Consultants). The SAPSTL, post-processor of SAP90, is used for checking the stress ratios of beam elements.

The stresses of the steel plates, which were modelled as shell elements (both bending and membrane), are checked against the allowable stresses. All the connecting elements such as bolts and welding are also checked.

The maximum displacements of the camera assembly are checked for the minimum clearance to avoid any interference with other surrounding elements.

## 1.4 Quality Objectives

- Check SAP90/SAPSTL models for assumptions, boundary conditions, loads and other input parameters for accuracy.
- Review of the methodology for checking the analysis against allowable stresses and displacements.

## SECTION 2: COMPUTER MODEL

### TABLE OF CONTENTS


| SECTION | CONTENTS | PAGE NO. |
|---|---|---|
| 2.1 | General Discussion | 2.11 – 2.14 |
| 2.2 | SAP90 input parameters | 2.2.1 |
| 2.3 | SAP90 Model sketches | 2.3.1 – 2.3.13 |
| 2.4 | SAPSTL input parameters | 2.4.1 |

## 2.1 General Discussion

### Modelling

The computer model is created using the SAP90 computer software which has the basic assumptions of 3-Dimensional elastic analysis.

Two analytical models were created as follows:

| Model | Description | Purpose |
|---|---|---|
| Model A | Camera Assembly unit only | Obtain Maximum Element stresses |
| Model B | Camera Assembly plus MPF riser stick Model | Obtain Maximum Displacements of Camera |

### Model A:

**Restraints:** The center point of the 20" riser was modelled as fixed in 6 degrees of freedom (DOF), with weightless stiff beams which span to the bolt holes of the flange plate. The flange plate shared the same node numbers as the bolt holes in the model. This approach allows the flange plate to move when it is subjected to loads, while the bolt holes remain stationary.

**Elements:** The plates were modelled as shell elements (both bending and membrane) with nodes located at the centerline of the plate. Therefore, the "rigid zone" between the thicknesses of the connecting plates are ignored.

The pipes and the braces were modelled as beam elements. The braces were welded on the pipes. Rigid links were used to span from the center of the pipes to the braces. The stiffness properties of the rigid links were obtained by an iterative process such that they were extremely rigid yet avoiding numerical instability in the model.

Description of Parts: Using the drawings and the list of parts from Attachment A, the description of parts and their connections which include SAP90 node and element numbers, size, thickness, material, yield and tensile strengths are tabulated in Table 2-1.

**Model B:**

**Restraints:** Model B was fixed in 6 DOF at the roof of the tank and shares the same node with the 20" riser.

**Elements:** The same elements were used from Model A with additional beam elements from the MPF riser stick model.

# TABLE 2-1: DESCRIPTION OF PARTS

**WHC/MPF ANALYSIS — CAMERA ASSEMBLY MODEL**

JOB NO.: 66481-01
FILENAME: PARTS.WQ1

PREPARED BY: [illegible] DATE: 7/28/94

CHECKED BY: [illegible] DATE 8/3/94

DESCRIPTION OF PARTS

| PART NO. | DESCRIPTION | <-- SAP90 MODEL--> NODE# | ELMT# | SIZE | THICK | MATERIAL | STRESS Fy(ksi) | STRENGTH Ft(ksi) | <-------CONNECTED--------> WITH | HOW |
|---|---|---|---|---|---|---|---|---|---|---|
| 42-1 | UPPER MAST ASSEMBLY | | | | | | | | | |
| 42-2 | SHIELDING PLATE | 1-85 | 1001-1216 | 22"D | 3" | CARBON STEEL | 36 | 58 | 42-3,42-4,42-5 | 1/2-13 X 5" 18-8 SS BOLTS |
| 42-3 | COVER PLATE | (Not modelled) | | 22"D | 1/4" | 300 SERIES SS | 25 | 70 | 42-2,42-4,42-5 | 1/2-13 X 5" 18-8 SS BOLTS |
| 42-4 | MANIFOLD ASSEM | (Modelled 42-5 only) | | | | | | | | |
| 42-5 | MANIFOLD TUBE | 21-140 | 2001-2020 | 22"D | 1" | 304 SS ASTM | 25 | 70 | 42-7 | 3/8 WELD (ASTM 308L) |
| 42-6 | DIVIDING PLATE | (Not modelled) | | 19.65x4" | 3/8" | 300 SERIES SS | 25 | 70 | | |
| 42-7 | FLANGE PLATE | 101-240 | 3001-3420 | 27.5"D | 3/4" | 300 SERIES SS | 25 | 70 | 20" RISER FLANGE | 1 1/8-7 UN[illegible] 2A 6" LONG ASTM A307 GR B |
| 42-8 | 1 1/4 IPS PIPE | 141-1104 | 201-240 | 107.9" | 0.14" | SCH 40 304 SS | 25 | 70 | 42-8 SS PIPES 42-7 | 3/16 WELD (ASTM 308L) |
| 42-9 | PIPE WELDING DETAIL | | (N/A) | | | | | | | |
| 42-10 | CROSS BRACE DETAIL | | (N/A) | | | | | | | |
| 42-11 | FLANGE PLT GAS | (Not modelled) | | | 1/8" | GARLOCK 3000 | N/A | N/A | 42-7 | |
| 42-12 | MATING PLT GASK | (Not modelle | | | 1/8" | GARLOCK 3000 | N/A | N/A | 40-3 | |
| 40-3 | MATING PLATE | 1101-1104 | 4001 | 13"x13" | 1/2" | 300 SERIES SS | 25 | 70 | 42-8 SS PIPES | 3/16 WELD |
| 40-5 | CROSS BRACE | 301-1014 | 401-420 | 1"x15" | 3/16" | 300 SERIES SS FL | 25 | 70 | 42-8 SS PIPES | 3/16 WELD |

# TABLE 2-1: DESCRIPTION OF PARTS (CONTINUED)

WHC/MPF ANALYSIS — CAMERA ASSEMBLY MODEL

JOB NO.: 66481-01
FILENAME: PARTS.WQ1

PREPARED BY: PM DATE 1/16/94
CHECKED BY: RJK DATE 8/2/94

DESCRIPTION OF PARTS

| PART NO. | DESCRIPTION | <-- SAP90 MODEL--> NODE# | ELMT# | SIZE | THICK | MATERIAL | STRESS Fy(ksi) | STRENGTH Ft(ksi) | <-------CONNECTED-------> WITH | HOW |
|---|---|---|---|---|---|---|---|---|---|---|
| 40-1 | LOWER MAST ASSEMBLY | | | | | | | | | |
| 40-2 | BOTTOM PLATE | 1801-1804 | 4002 | 13"x13" | 1/2" | 300 SERIES SS | 25 | 70 | 40-11 SS PIPES | 3/16 WELD |
| 40-3 | MATING PLATE | 1101-1104 | 4001 | 13"x13" | 1/2" | 300 SERIES SS | 25 | 70 | 40-11 SS PIPES | 3/16 WELD |
| 40-4 | LIGHT SUPPORT | 1401-1603 | 501-503 | 15.6"x1" | 3/8" | 300 SERIES SS FL | 25 | 70 | 40-11 SS PIPES | 1/8 WELD |
| 40-5 | CROSS BRACE | 301-1014 | 401-420 | 1"x15" | 1/4" | 300 SERIES SS FL | 25 | 70 | 40-11 SS PIPES | 3/16 WELD |
| 40-6 | GAS TUBE DETAIL | | (N/A) | | | | | | | |
| 40-7 | LIGHT FITTING DETAIL | | (N/A) | | | | | | | |
| 40-8 | CROSS BRACE DETAIL | | (N/A) | | | | | | | |
| 40-9 | PIPE WELDING DETAIL | | (N/A) | | | | | | | |
| 40-10 | 1/2NPT NIPPLE M | (Not modelled) | | .84"D | 1/2" | 1/2 NPT x 2 1/2 SS NIPPLE | | N/A | 40-11 SS PIPES | 1/8 WELD |
| 40-11 | 1 1/4 IPS PIPE | 1101-1804 | 241-268 | 86 0" | 0 14" | SCH 40 304 SS | 25 | 70 | 40-3,40-2 | 3/16 WELD |
| 40-12 | 3/8 IPS GAS PIPE | 1702-1704 | 504-505 | .675"D x9.34" | 0 15" | 3/8 IPS SCH 40 304 SS PIPE | 25 | 70 | 40-11 SS PIPES | 1/8 WELD |
| 40-13 | FITTING | (Not modelled) | | | 4" | 300 SERIES SS | 25 | 70 | 40-11 SS PIPES | |
| 40-14 | FITTING GASKET | (Not modelled) | | | 1/8" | GARLOCK 3000 G | N/A | N/A | 40-11 SS PIPES, 40-13 | |

## 2.2 SAP90 Input Parameters

Model A: Nodes & Elements

Using the drawings from Attachment A, the SAP90 Model A was created with 271 nodes with the following elements:

**Beam Elements:**

| | |
|---|---|
| 20 | Weightless stiff beams connect from bolts to Master Node |
| 68 | Pipes |
| 20 | Braces |
| 40 | Short stiff beams span from center of pipes to braces |
| 3 | Light support beams |
| 2 | 3/8" Gas pipes |
| 4 | Stiff beams connect from bottom plate to camera |
| --- | |
| 157 | Total beam elements |

**Shell Elements:**

| | |
|---|---|
| 60 | elements for 3" thick Shielding plate |
| 20 | elements for 2" thick, 4" high manifold tube |
| 100 | elements for 3/4" thick Flange plate |
| 1 | element for 1/2" thick mating plate |
| 1 | element for 1/2" thick bottom plate |
| --- | |
| 182 | Total shell elements |

**Material Properties:**

Es = 29,000 ksi
Steel Density = 0.49 kcf

Since the entire camera assembly is given as 1,227 lbs, adjustment factors were applied to the steel density of selective components to account for the unmodelled parts of the manifold assembly. See Section 3 for details.

Model B: Nodes & Elements:

Model B was created by using the same nodes and elements of Model A, and additionally 11 nodes and 20 beam elements.

## 2.3 SAP90 Model Sketches

Selective sketches of the SAP90 Model A and Model B are given in this section.

232
by pm 6/8/94

# 42-1 UPPER MAST ASSEMBLY WITH SHIELDING PLATE

total wt = 1,227 lbs (5/26/94)

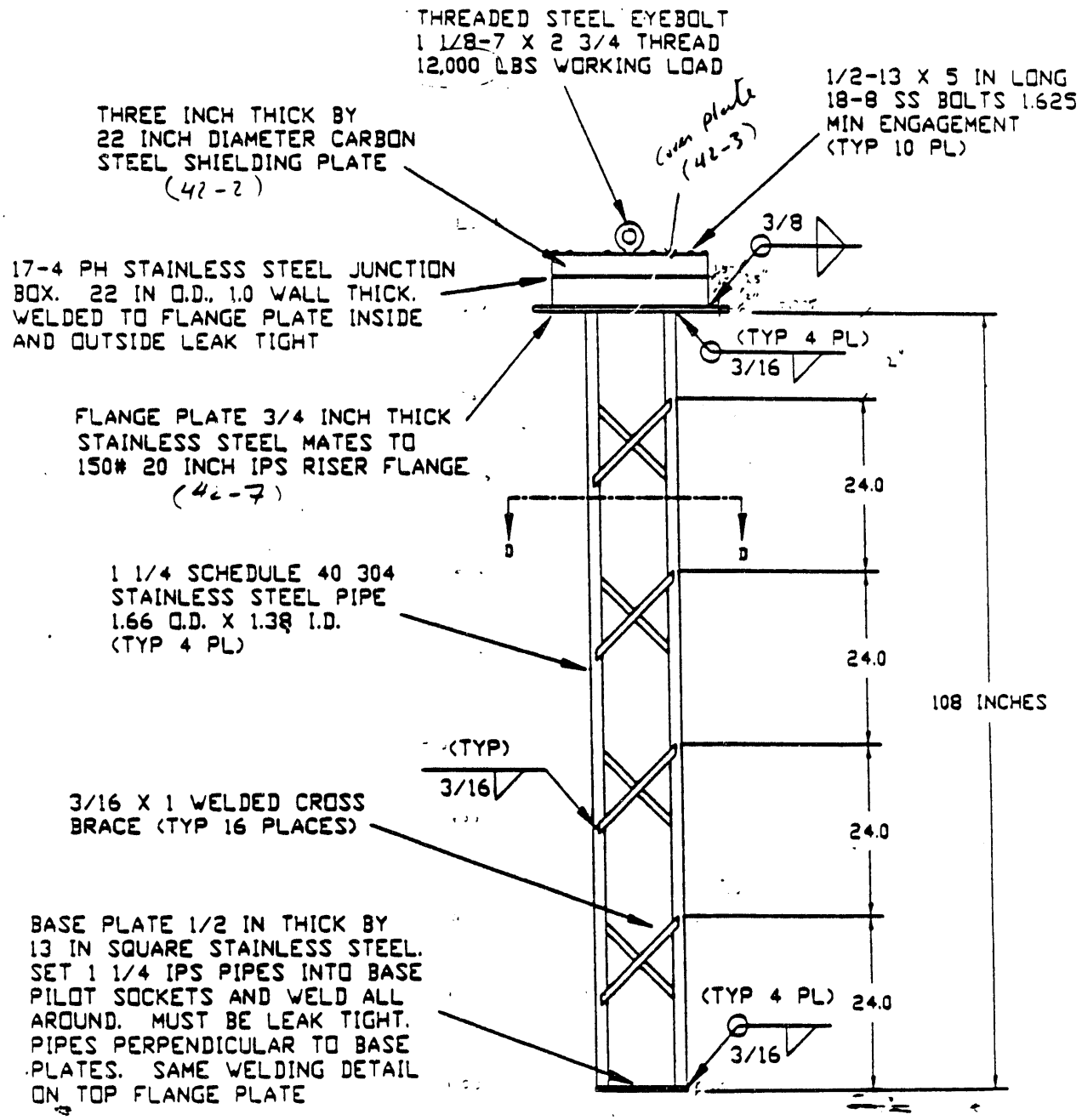


CRESTONE PRODUCTS, INC.
4175 W. QUAIL RIDGE DR.
BOISE, ID 83703
TEL 208-368-7998
FAX 208-368-7999

CRESTONE PRODUCTS INC.
4175 W. QUAIL RIDGE D...
BOISE, ID 83703
TEL 208-368-7998
FAX 208-368-7999

# 40-1 LOWER MAST ASSEMBLY

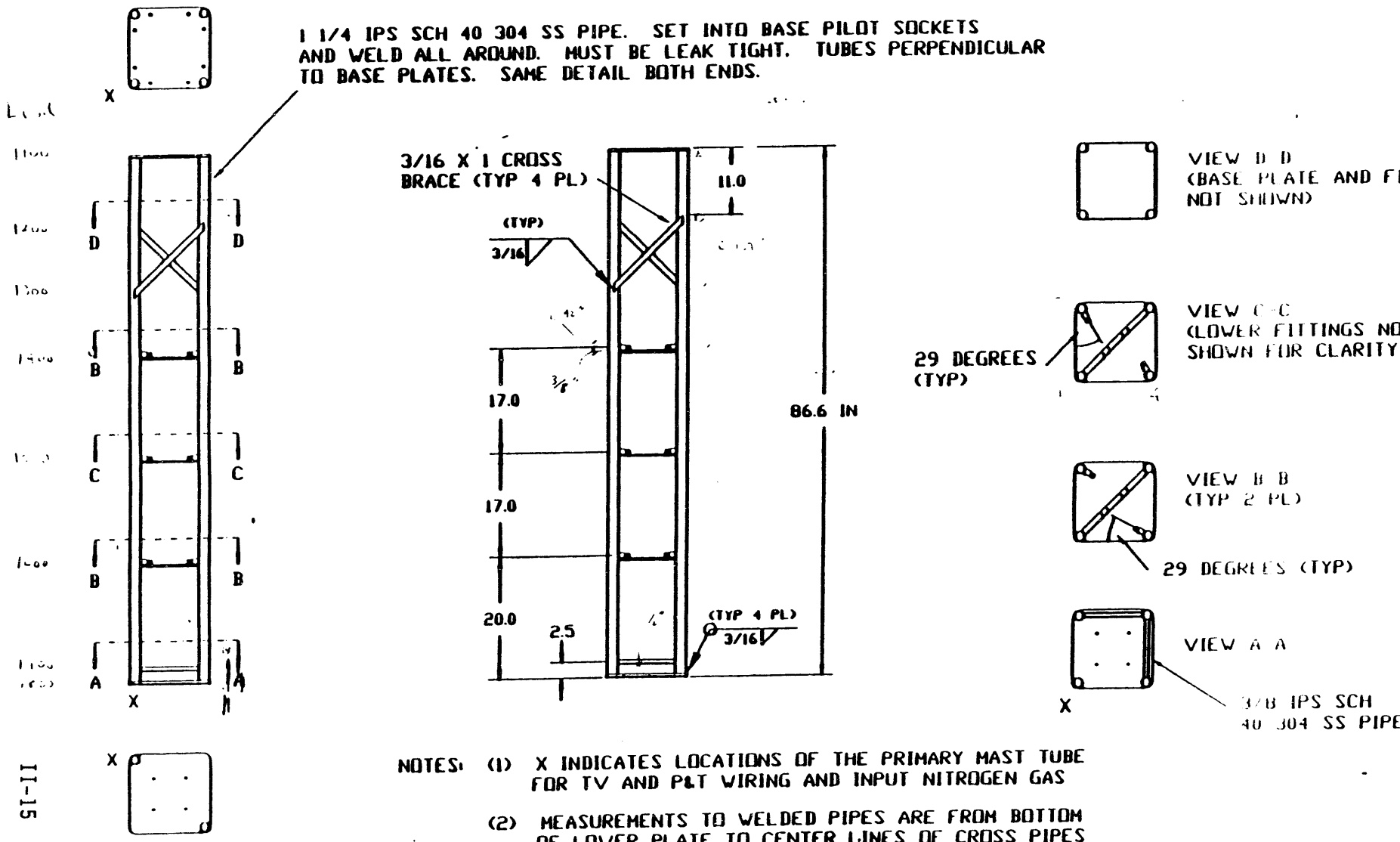


NOTES: (1) X INDICATES LOCATIONS OF THE PRIMARY MAST TUBE FOR TV AND P&T WIRING AND INPUT NITROGEN GAS

(2) MEASUREMENTS TO WELDED PIPES ARE FROM BOTTOM OF LOWER PLATE TO CENTER LINES OF CROSS PIPES AND BETWEEN CENTERS OF CROSS PIPES

233
6/8/94

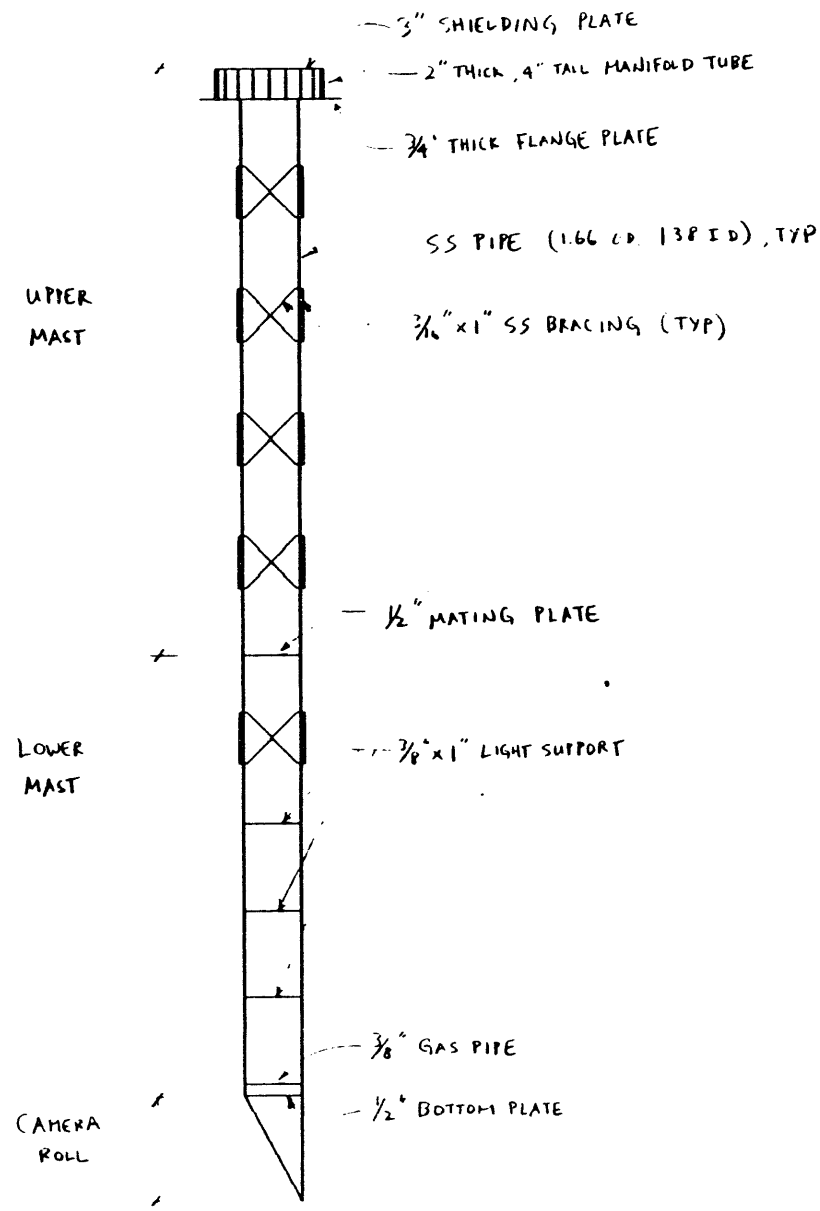


Z

X

CM-A-04

UNDEFORMED SHAPE

OPTIONS

WIRE FRAME

SAP90

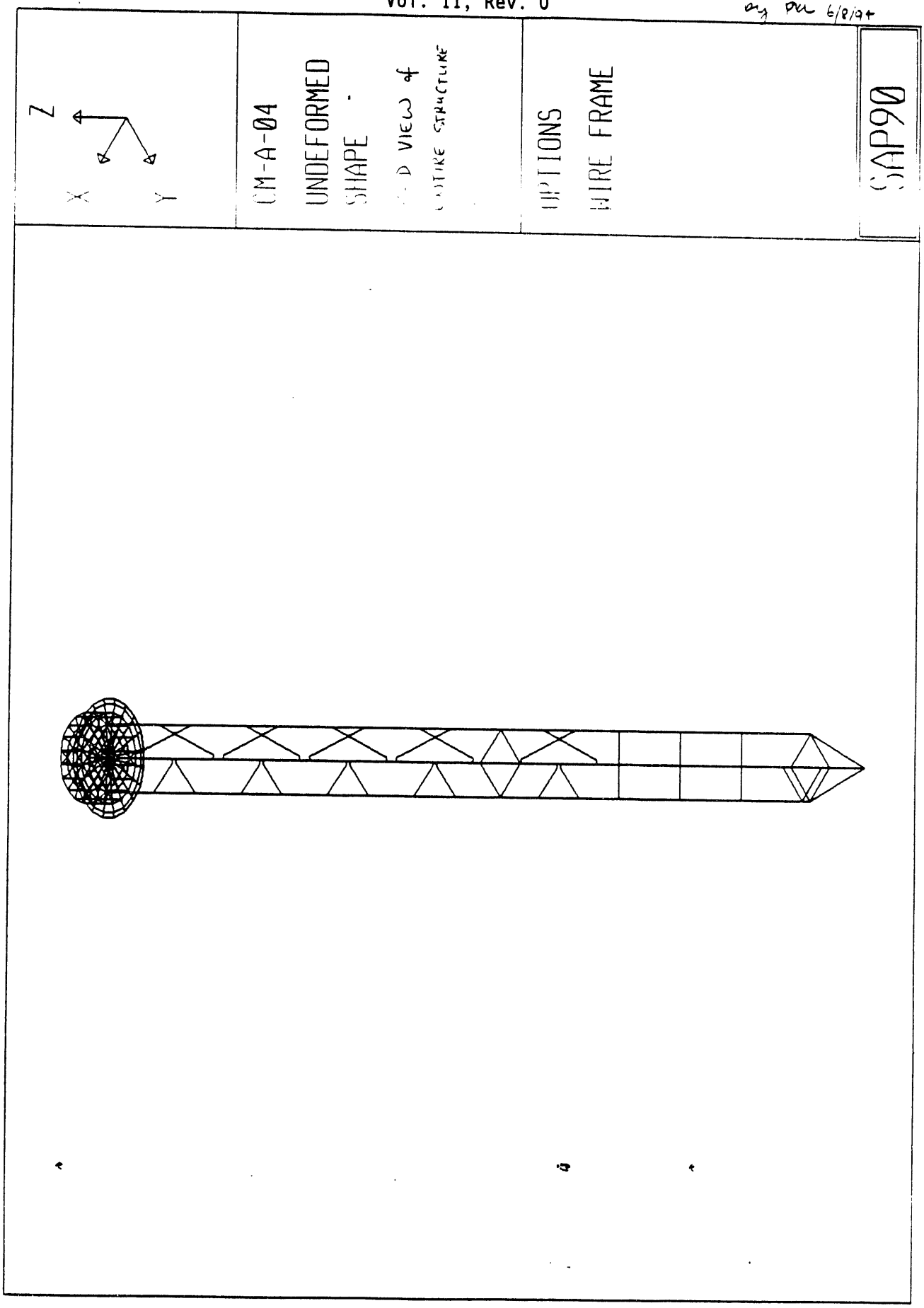
Z
X
Y
CM-A-04
UNDEFORMED
SHAPE
OPTIONS
WIRE FRAME
SAP90

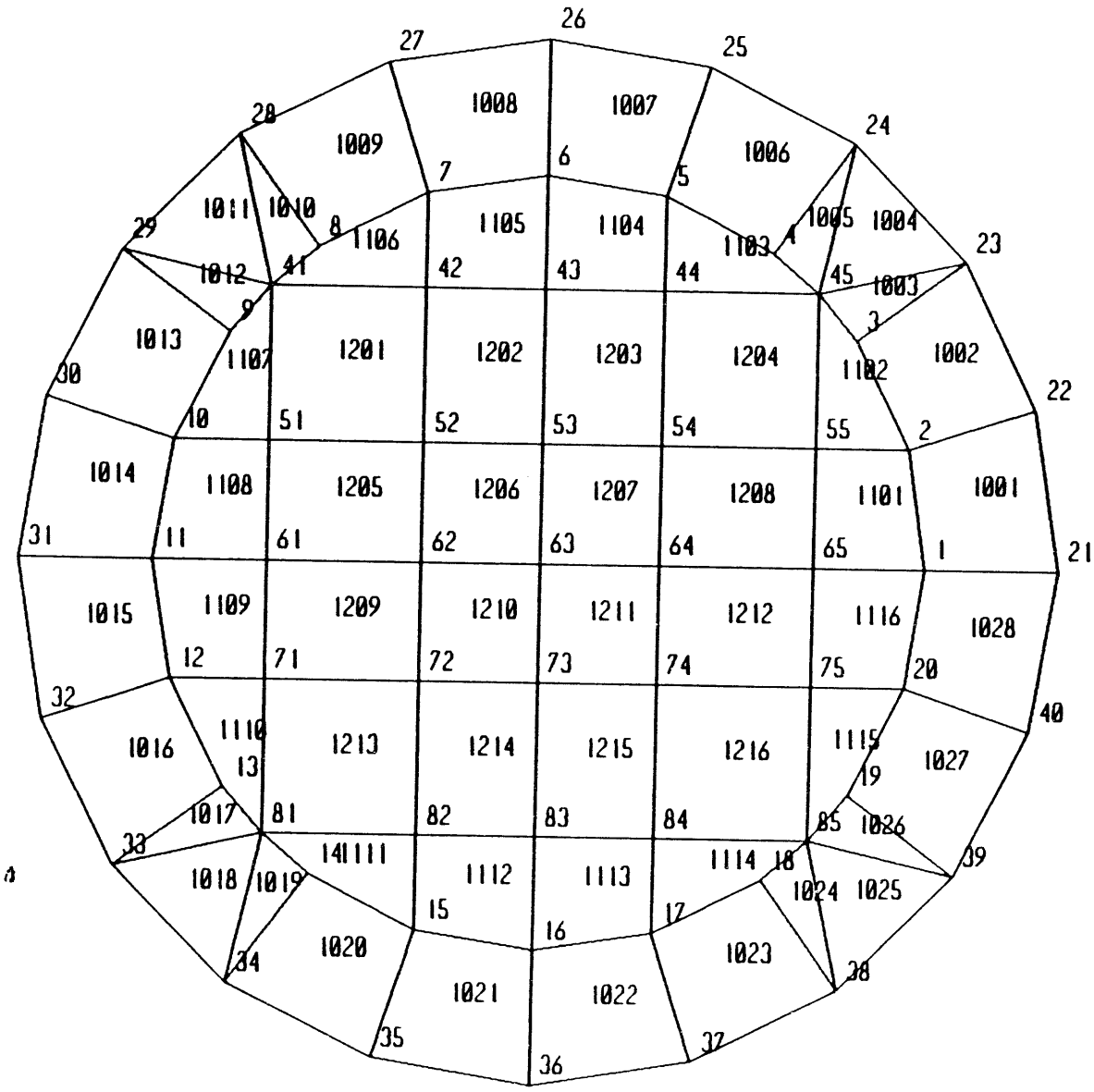


CM-A-01

UNDEFORMED SHAPE

THICK WELDING PLATE

OPTIONS

JOINT IDS

ELEMENT IDS

WIRE FRAME

SAP90

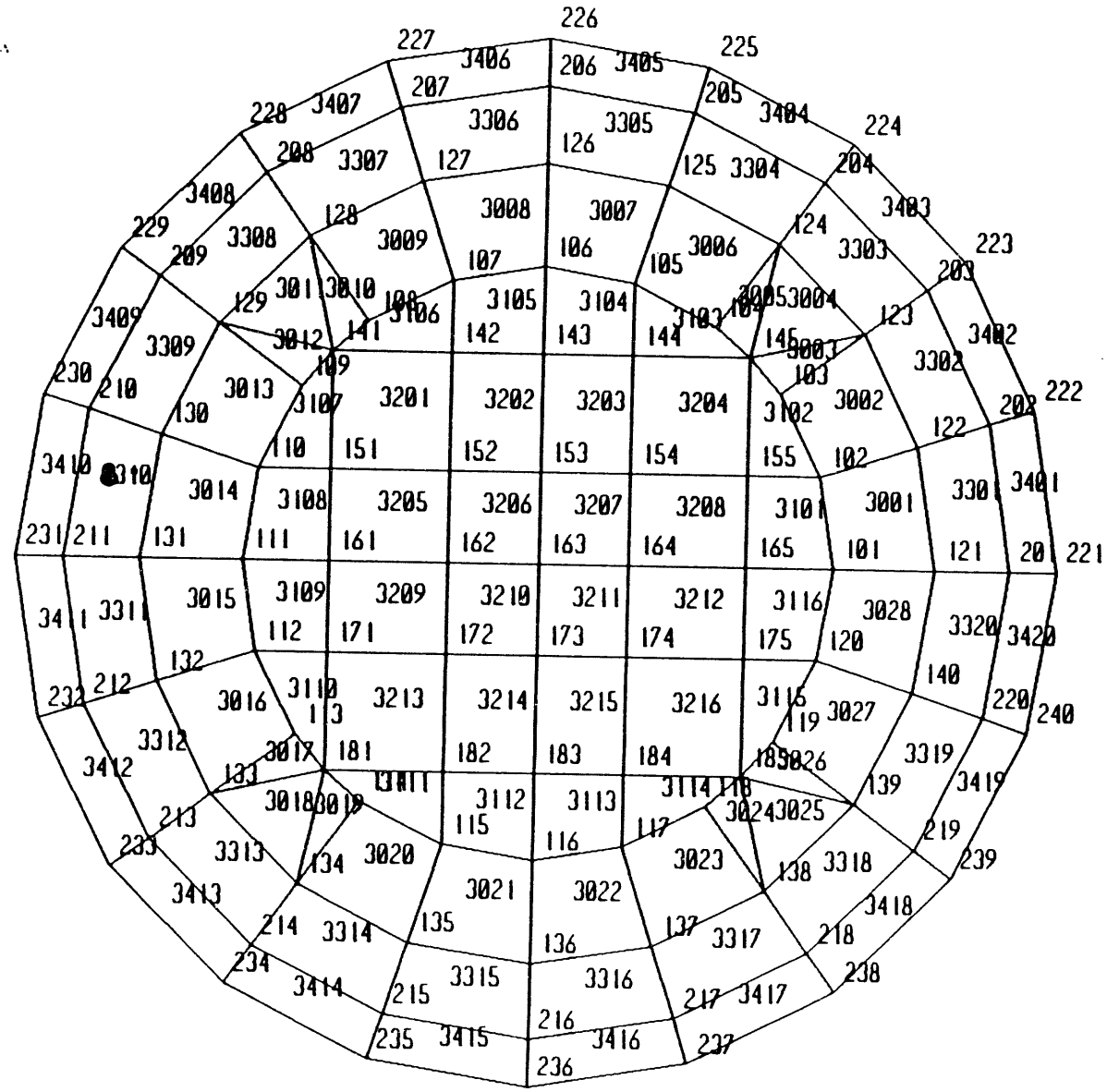


CM-A-01

UNDEFORMED SHAPE

4" THICK FLANGE PLATE

OPTIONS

JOINT IDS

ELEMENT IDS

WIRE FRAME

SAP90

WHC-SD-WM-DA-163
Vol. II, Rev. 0

2.3 f

by PRL 6/8/94

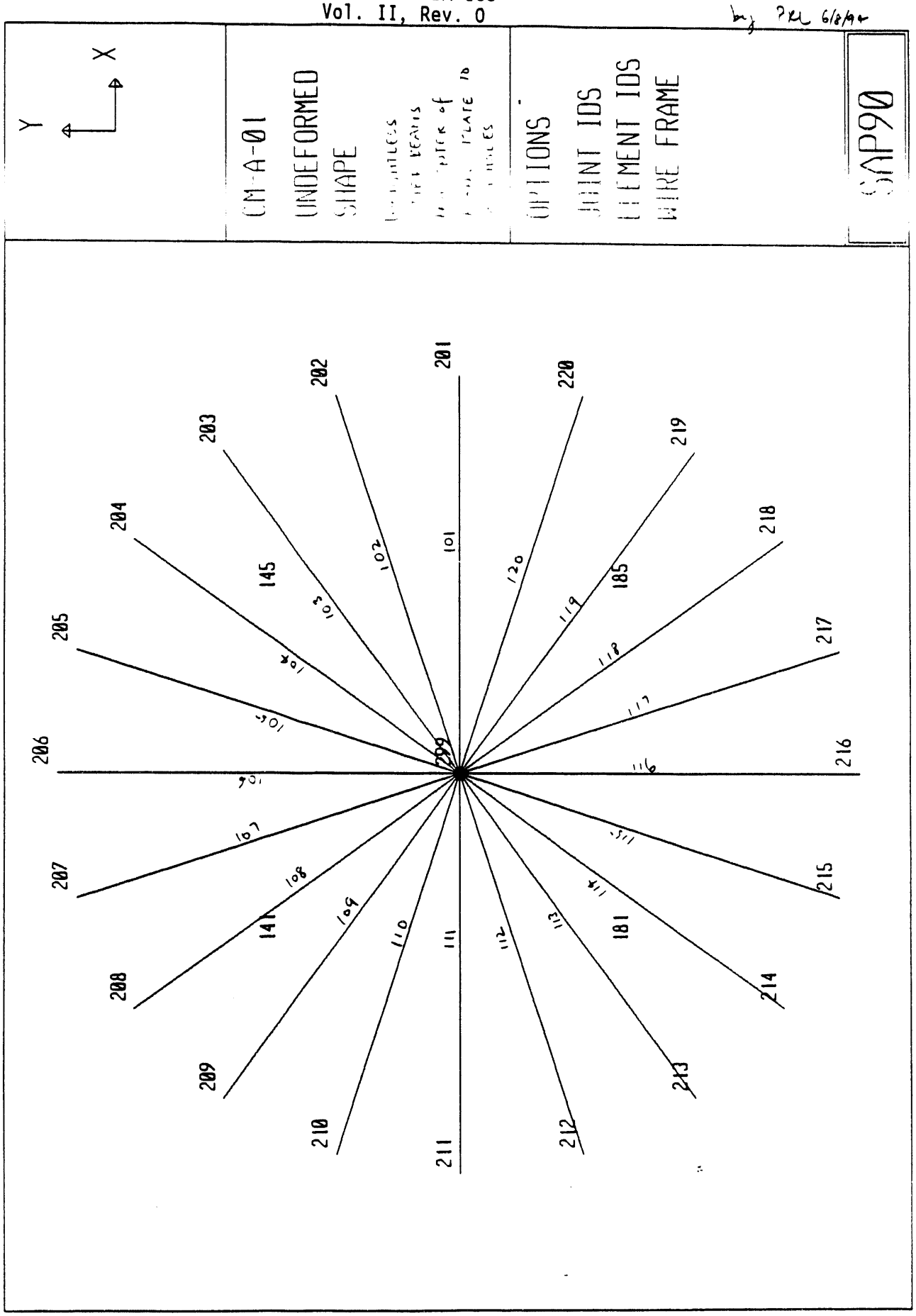

239

by PU 6/8/94

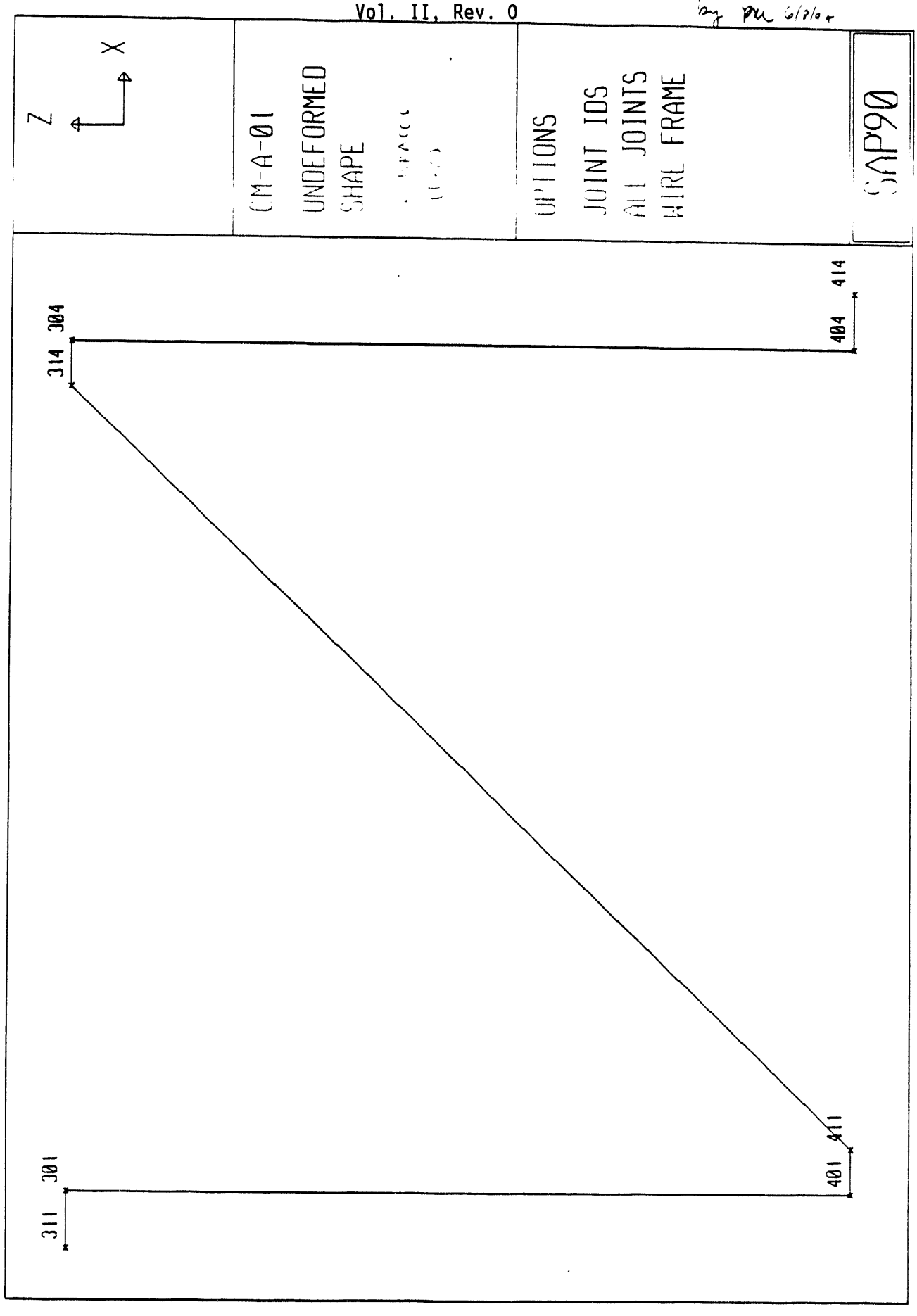

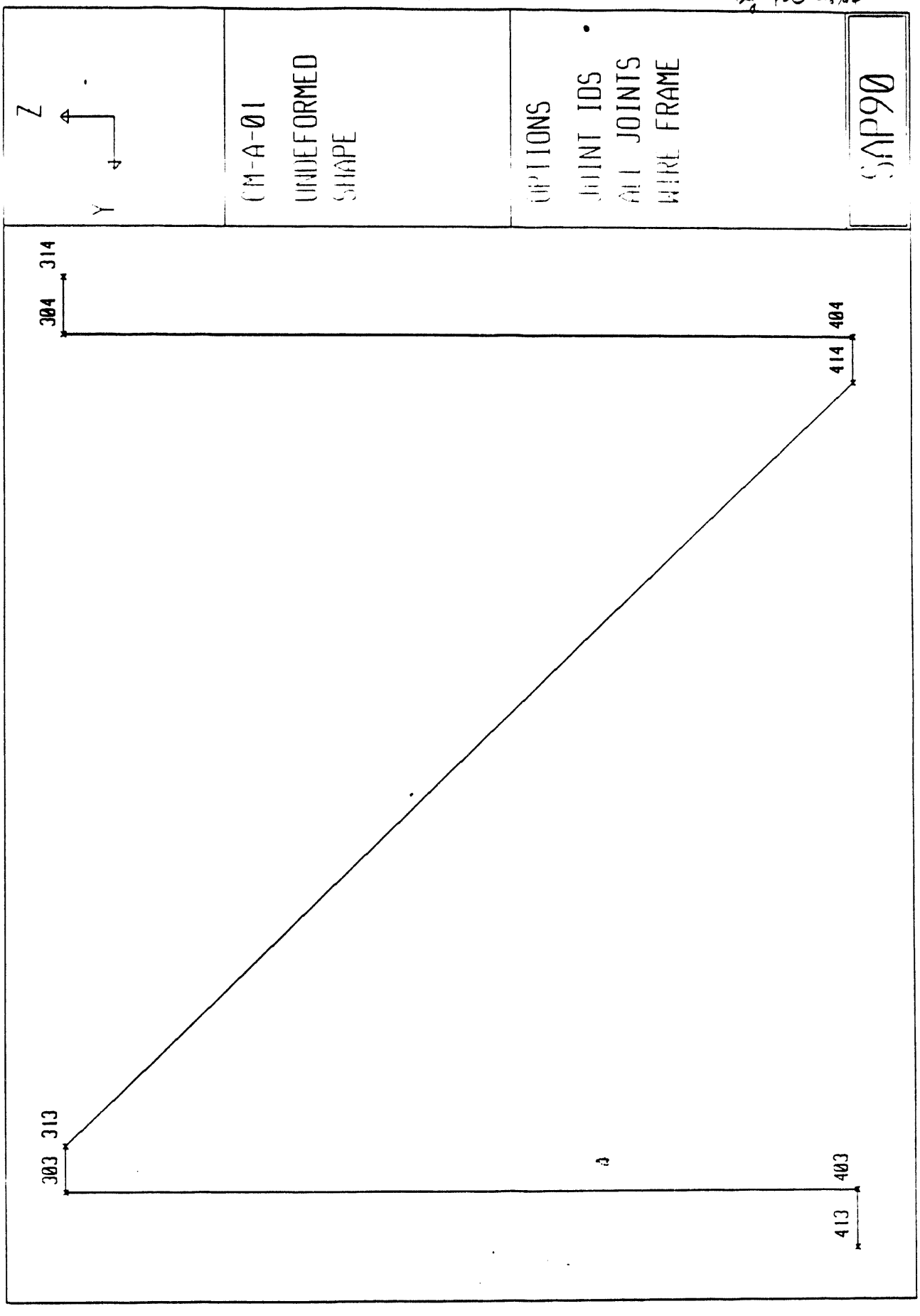
Z
Y
CM-A-01
UNDEFORMED
SHAPE
OPTIONS
JOINT IDS
ALL JOINTS
WIRE FRAME
SAP90
314
304
404
414
313
303
403
413

2311

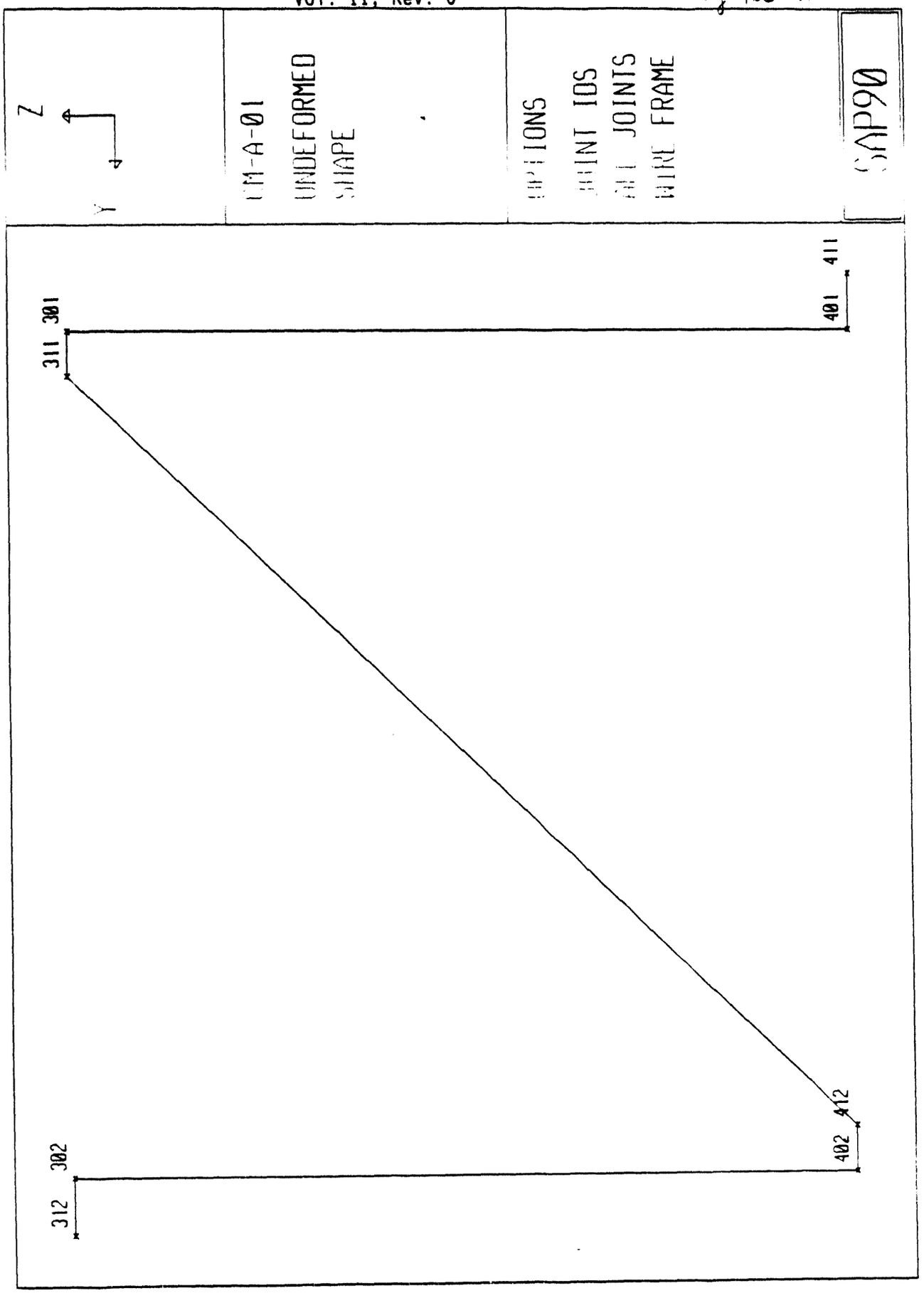
Z
Y
CM-A-01
UNDEFORMED
SHAPE
OPTIONS
JOINT IDS
ALL JOINTS
WIRE FRAME
SAP90
301
311
411
401
302
312
412
402

2.3.12

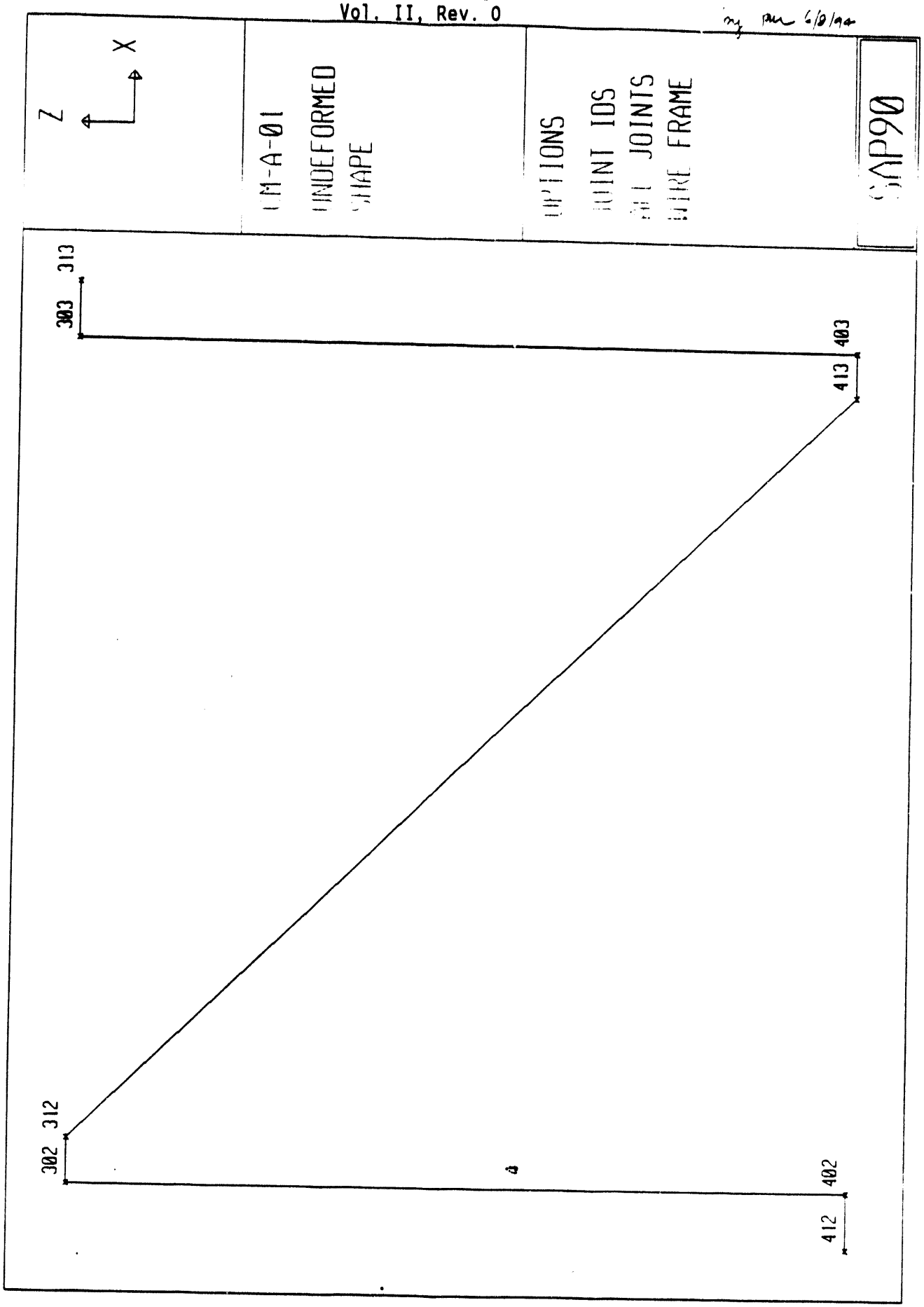
Z
X
CM-A-01
UNDEFORMED
SHAPE
OPTIONS
JOINT IDS
ALL JOINTS
WIRE FRAME
SAP90
313
303
403
413
312
302
402
412

2 3.13

6/8/94

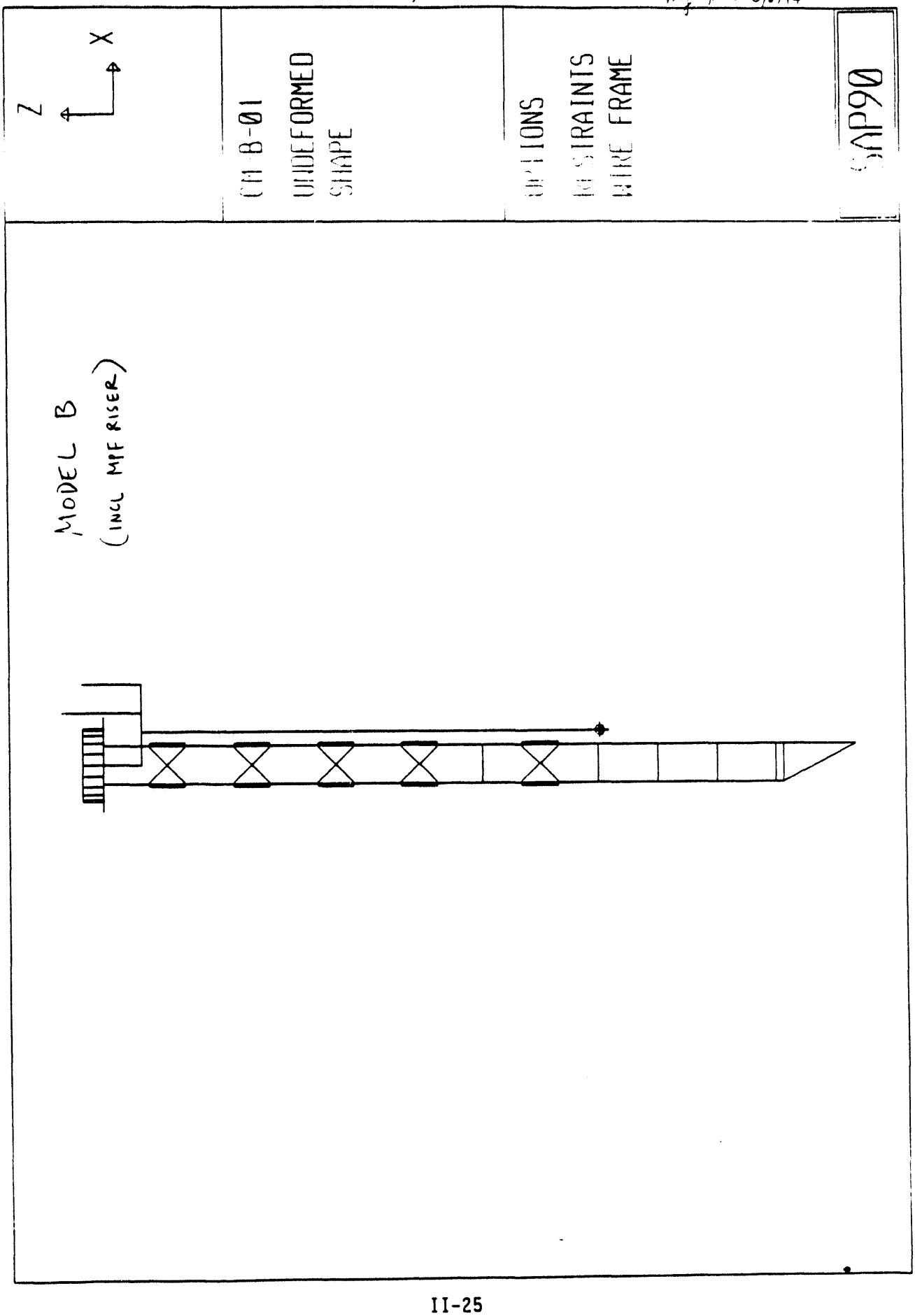
Z
X
CM B-01
UNDEFORMED
SHAPE
OPTIONS
RESTRAINTS
WIRE FRAME
SAP90
MODEL B
(INCL MPF RISER)

## 2.4 SAPSTL Input parameters

The purpose of using the SAPSTL post-processor was to check the stress ratios of the pipes and the braces.

The material property parameter, MN=N, was used for beam elements other than pipes and braces (such as weightless stiff beams). This parameter suppressed the unnecessary output.

"K" factor was set to be:

K=2 for cross braces
K=1 for all others

Cm was globally set to be 0.85 for all elements.

The following allowable stresses were computed and input to SAPSTL to override the default built-in allowable formulas:

Fb33 Major bending stress
Fb22 Minor bending stress
Fac Compressive axial stress
Ft Tension axial stress
Fv Shear stress

## SECTION 3: LOADS

### TABLE OF CONTENTS


| SECTION | CONTENTS | PAGE NO. |
|---|---|---|
| 3.1 | General Discussion | 3.1.1 |
| 3.2 | Camera Assembly Dead Loads | 3.2.1 – 3.2.5 |
| 3.3 | Response Spectra | 3.3.1 – 3.3.9 |

## 3.1 General Discussion

The Dead load (DL) of the camera assembly was given by WHC as 1,227 lbs (see Attachment D).

The Response Spectrum (RS) for the Non-reactor Safety Class 2, 2% of critical damping was used. This spectrum was applied in 3 directions:

100% in X-dir (horizontal)
100% in Y-dir (horizontal)
100% in Z-dir (Vertical)

Note that the scale factor of 2/3 was not used to scale the vertical spectrum per specification of the SDC 4.1 Rev. 12 ("Design Loads for Facilities", Non-reactor Safety Class 2), to account for potential amplification of vertical ground motion by the roof of the tank. This is considered as a conservative assumption.

Four load cases were performed:

1. 1.0 * DL
2. 1.0 * RS
3. 1.0 * DL + 1.0 * RS
4. 1.0 * DL - 1.0 * RS

## 3.2 Camera Assembly Dead Loads

### Summary of Camera's Weights

The weights of the camera assembly elements in SAP90 are :

| | | |
|---|---|---|
| Beam elements | 168.2 lbs | |
| Shell elements | 931.8 lbs | |
| Camera | 128.0 lbs | |
| Total | 1,228.0 lbs | (close enough for a total of 1,227 lbs) |

### Check SAP90 Element Self-Weight

Hand calculations of weights were performed for each unit and compared to the SAP90 self-weights as computed by the software. Due to modelling and other unaccounted parts, there were some discrepancies. Weight adjustments were made to remedy the differences. The hand calculations, explanations of discrepancies of weights, and weight adjustments are given in the following pages.

**URS Consultants**
**URS/John A. Blume & Associates, Engineers**

Job no. 66481-01 Job WHC/MPF ANALYSIS
Client
Subject CHECK WEIGHTS

Sheet No. 3.22
Calc. No.
Rev. No.
By PLL Date 6/2/94
Chk'd [illegible] Date 7/[illegible]

SHELL ELEMENT SELF-WEIGHTS

WT of 3" SHIELDING PLATE : $D = 22''$ $A = \frac{\pi D^2}{4} = 380\ in^2$ $t = 3''$

$$WT = 3'' \times 380\ in^2 \times \frac{.49^K}{1728\ in^3}$$

$$= 0.323^K$$

$$MASS = \frac{0.323^K}{386.4} = 0.0008366$$

WT. of MANIFOLD TUBE $OD = 22''$ $ID = 20''$ $h = 4''$

$$A = \frac{\pi}{4}(22^2 - 20^2) = 65.97\ in^2$$

$$WT = 4'' \times 65.97 \times \frac{.49}{1728} = 0.0748^K$$

$$MASS = \frac{0.0748^K}{386.4} = 0.0001937$$

WT of FLANGE PLATE : $D = 27.5''$ $A = \frac{\pi D^2}{4} = 594\ in^2$ $t = 0.75''$

$$WT = 0.75 \times 594 \times \frac{.49}{1728} = 0.1263^K$$

WT of MATING PLATE. BOTTOM $A = 13'' \times 13'' = 169$ $t = 0.5''$

$$WT = 0.5 \times 169 \times \frac{.49}{1728} = 0.024^K$$

**URS Consultants**
**URS/John A. Blume & Associates, Engineers**

Job no. 66481-01 Job WHC/MPF ANALYSIS
Client
Subject CHECK WEIGHTS

Sheet No. 323
Calc. No.
Rev. No.
By PW Date 6/6/94
Chk'd [illegible] Date 7/12/94

BEAM ELEMENTS SELF WEIGHTS

WT. of PIPES : O.D. = 1.66" I.D. = 1.38" $A = \frac{\pi}{4}(1.66^2 - 1.38^2) = 0.6685\ in^2$
LENGTH = 108" + 86.6" = 194.6"

$WT = 0.6685 \times 194.6 \times \frac{.49}{1728} = 0.0369$

4 PIPES = $4 \times 0.0369 = 0.1476^K$

CROSS BRACES : L = 14" t = 3/16 h = 1" A = 3/16 $in^2$

$WT = \frac{3}{16} \times 14 \times \frac{.49}{1728} = 0.000744^K$ /BRACE

20 BRACES = $20 \times 0.000744^K = 0.0149$

LIGHT SUPPORT : L = 13.9" t = 3/8" h = 1"

$WT = \frac{3}{8} \times 13.9 \times \frac{.49}{1728} = 0.001478$ /SUPPORT

3 SUPPORTS = $3 \times 0.001478 = 0.0044^K$

3/8" GAS PIPES O.D. = 0.675" I.D. = 0.375" $A = \frac{\pi}{4}(0.675^2 - 0.375^2) = 0.247\ in^2$
LENGTH = 9.34"

$WT = 0.247 \times 9.34 \times \frac{.49}{1728} = 0.000655^K$ /PIPE

2 PIPES = $2 \times 0.0000655^K = 0.00131^K$

**URS Consultants**
**URS/John A. Blume & Associates, Engineers**

Job no. 66481-01 Job WHC/MPF ANALYSIS
Client
Subject CHECK WEIGHTS

Sheet No. 32
Calc. No.
Rev. No.
By PKL Date 6/2/94
Chk'd [illegible] Date 7/[illegible]/94

| PART | HAND-CAL WEIGHTS | SAP90 WEIGHTS | EXPLANATIONS |
|---|---|---|---|
| SHIELDING PLATE | 0.323 | 0.2901 | SAP90 uses D=21" (Center of Bolts) $0.323\left(1-\frac{22^2-21^2}{22^2}\right) = 0.294^K \approx 0.290^K$ SLIGHT DIFF DUE TO SAP90 MODEL NOT EXACTLY ROUND OK! |
| MANIFOLD TUBE | $0.0748^K$ | 0.2189 NOTE It should be 0.1095 due to an error in SAP90 t=2" instead of 1" | SAP90 use D=21", HEIGHT = 5.875" instead of 4" HEIGHT = 5.875 SPAN FROM CENTER of SHIELDING PLATE TO CENTER of FLANGE PLATE PKL 7/20/94 RIK 8/3/94 |
| FLANGE PLATE | $0.1263^K$ | $0.1243^K$ | SLIGHT DIFF DUE TO SAP90 MODEL NOT EXACTLY ROUND, OK! |
| MATING & BOTTOM PLATE | $0.024^K$ | $0.0172^K$ | SAP90 uses 11"x11" (CENTER of PIPES) $0.024 \times \left[1-\frac{13^2-11^2}{13^2}\right] = 0.0172^K$ OK |
| PIPES | $0.1476^K$ | $0.1578^K$ | $\frac{0.1579-0.1476}{0.1476} \approx 7\%$ INCREASE of WT DUE TO SAP90 NODE TO CENTER of PLATES. OK |
| CROSS BRACES | $0.0149^K$ | $0.0150^K$ | OK |
| LIGHT SUPPORT | $0.0044^K$ | $0.005^K$ | SAP90 MODEL TO CENTER of PIPE OK |
| 3/8 GAS PIPES | $0.0013^K$ | $0.0015^K$ | " |

$\Sigma = 0.739^K$

**URS Consultants**
**URS/John A. Blume & Associates, Engineers**

Job no. 66431-01 Job WHC/MPF ANALYSIS
Client
Subject WEIGHT ADJUSTMENTS

Sheet No. 325
Calc. No.
Rev. No.
By PKW Date 6/2/94
Chk'd [illegible] Date [illegible]

PER WHC's LETTER of 5/25/94

WT. of CAMERA ASSEMBLY = 1099 lbs
WT of CAMERA = 128 lbs
TOTAL = 1227 lbs

[illegible] should be [illegible] 0.1K to manifold tube and the rest 0.26K be distributed in the SS pipes. However lumping the mass at the manifold tube has a very small impact on increasing load in the structure. The response spectrum is flat between 1 ft → 3 Hz. No additional amplification (for the same a [illegible] is about 7 Hz). PKW 7/[illegible]

EXTRA WEIGHTS ARE DISTRIBUTED TO MANIFOLD TUBE TO ACCT FOR OTHER PARTS $1.099^K - 0.739^K = 0.36^K$

Besides the stress ratios were low — say OK!

largest S.R. = .375 with the increase of wt the S.R. should still be under 1.0
JW 7/[illegible]
RIK 8/3/94

| PARTS | WT. ADJUSTMENT FACTORS | |
|---|---|---|
| SHIELDING PLATE | $\frac{0.323}{0.2901}$ | = 1.113 |
| MANIFOLD TUBE | $\frac{0.0748+0.36}{0.2189}$ | = 1.986 |
| FLANGE PLATE | $\frac{0.1263}{0.1243}$ | = 1.016 |
| MATING & BOTTOM PLATES | $\frac{0.024}{0.0172}$ | = 1.395 |
| CROSS BRACES | $\frac{0.0149}{0.0150}$ | = 0.993 |
| LIGHT SUPPORT | $\frac{0.0044}{0.005}$ | = 0.88 |
| 3/8 GAS PIPES | $\frac{0.0013}{0.0015}$ | = 0.8667 |
| SS PIPES | $\frac{0.1476}{0.1578}$ | = 0.935 |

TOTAL SHELL ELMT WT = $0.9318^K$

TOTAL BEAM ELMT WT = $.1682^K$

## 3.3 Response Spectra Analysis

The response spectrum was obtained from SDC 4.1 Rev. 12, Figure 5 (log-log scale) with tabulated design spectra in Table 2 of the same document. A spreadsheet (SA.WQ1) was created to interpolate from log-log scale to linear-linear scale.

The interpolated spectrum and its plots are given in this section.

During the eignvalue extraction computations, the participating mass in the vertical direction was less than 90% for 20 mode cut-off. The main reasons were:

1. The masses of the shielding plate, manifold tube and the flange plate are high (76% of the total mass of the entire structure).

2. The flange plate is fixed in all directions at the center of the plate.

3. The stiffness of the plates and tube are comparatively much higher than the 195" pipes hanging down from the flange plate.

To alleviate the mass participation problem, the shell elements of the shielding plate, manifold tube and the flange plate were treated as massless. Their masses were applied as equivalent static loads, load condition 2 (LC2), as follows:

F(x) = Mass * ZPA
F(y) = Mass * ZPA
F(z) = Mass * ZPA

where ZPA = Zero Period Acceleration of 0.12g for Class 2 Structure

The load combinations are:

| | | |
|---|---|---|
| 1. | DL | Dead load only |
| 2. | LC2 + SA | Spectrum only |
| 3. | DL + LC2 + SA | Dead load + Spectrum |
| 4. | DL - LC2 - SA | Dead Load - Spectrum |

WHC/MPF ANALYSIS --- CAMERA ASSEMBLY MODEL
NON-REACTOR SAFETY CLASS 2
2% DAMPED DESIGN SPECTRUM

JOB NO. 66458-01
FILENAME: SA.WQ1

Prepared by: PKL Date 6/8/94

Checked by: [illegible] Date [illegible]

SOURCE: SDC 4.1 REVISION 12, DESIGN LOADS FOR FACILITIES
FIGURE 3 & TABLE 2, SCALED BY 0.6 FOR CLASS 2

NOTE: DESIGN SPECTRUM IS GIVEN IN LOG-LOG SCALE

| Per (SEC) | Freq (Hz) | SAx (g) | SAy (g) | SAz (g) | UNSCALED SA |
|---|---|---|---|---|---|
| 0.01 | 100 | 0.12 | 0.12 | 0.08004 | 0.2 |
| 0.030303 | 33 | 0.12 | 0.12 | 0.08004 | 0.2 |
| 0.05 | 20 | 0.1716 | 0.1716 | 0.1144572 | 0.286 |
| 0.0833333 | 12 | 0.2472 | 0.24[illegible] | 0.1648824 | 0.412 |
| 0.125 | 8 | 0.33 | 0.33 | 0.22011 | 0.55 |
| 0.5780347 | 1.73 | 0.33 | 0.33 | 0.22011 | 0.55 |
| 0.9090909 | 1.1 | 0.2106 | 0.2106 | 0.1404702 | 0.351 |
| 1.6666667 | 0.6 | 0.1152 | 0.1152 | 0.0768384 | 0.192 |
| 2.5 | 0.4 | 0.0774 | 0.0774 | 0.0516258 | 0.129 |
| 3.8461538 | 0.26 | 0.0504 | 0.0504 | 0.0336168 | 0.084 |
| 6.25 | 0.16 | 0.0186 | 0.0186 | 0.0124062 | 0.031 |
| 10 | 0.1 | 0.0072 | 0.0072 | 0.0048024 | 0.012 |

SHEET NO 3 3 3

WHC/MPF ANALYSIS --- CAMERA ASSEMBLY MODEL
NON-REACTOR SAFETY CLASS 2
2% DAMPED DESIGN SPECTRUM

JOB NO. 66458-01
FILENAME: SA.WQ1

Prepared by: PRL Date 1/8/94

Checked by: K/[illegible] Date [illegible]

CONVERT LOG-LOG DESIGN SPECTRUM TO NATURAL-NATURAL FORMAT

| LOG-LOG | | | -->>> | NATURAL-NATURAL | |
|---|---|---|---|---|---|
| | HORIZONTAL | VERTICAL | | HORI. | VERTICAL |
| PERIOD | SA | SA | PERIOD | SA | SA |
| (SEC) | (G) | (G) | (SEC) | (G) | (G) |
| 0.01 | 0.12 | 0.08004 | 0.01000 | 0.12000 | 0.08004 |
| 0.030303 | 0.12 | 0.08004 | 0.01508 | 0.12000 | 0.0800 |
| 0.05 | 0.1716 | 0.1144572 | 0.02015 | 0.12000 | 0.0800 |
| 0.0833333 | 0.2472 | 0.1648824 | 0.02523 | 0.12000 | 0.0800 |
| 0.125 | 0.33 | 0.22011 | 0.03030 | 0.12000 | 0.0800 |
| 0.5780347 | 0.33 | 0.22011 | 0.03523 | 0.13362 | 0.0891 |
| 0.9090909 | 0.2106 | 0.1404702 | 0.04015 | 0.14671 | 0.0979 |
| 1.6666667 | 0.1152 | 0.0768384 | 0.04508 | 0.15935 | 0.1063 |
| 2.5 | 0.0774 | 0.0516258 | 0.05000 | 0.17160 | 0.1145 |
| 3.8461538 | 0.0504 | 0.0336168 | 0.05833 | 0.19158 | 0.1278 |
| 6.25 | 0.0186 | 0.0124062 | 0.06667 | 0.21076 | 0.1406 |
| 10 | 0.0072 | 0.0048024 | 0.07500 | 0.22927 | 0.1529 |
| | | | 0.08333 | 0.24720 | 0.1649 |
| | | | 0.09375 | 0.26884 | 0.1793 |
| | | | 0.10417 | 0.28980 | 0.1933 |
| | | | 0.11458 | 0.31016 | 0.2069 |
| | | | 0.12500 | 0.33000 | 0.2201 |
| | | | 0.23826 | 0.33000 | 0.2201 |
| | | | 0.35152 | 0.33000 | 0.2201 |
| | | | 0.46478 | 0.33000 | 0.2201 |

WHC/MPF ANALYSIS --- CAMERA ASSEMBLY MODEL
NON-REACTOR SAFETY CLASS 2
2% DAMPED DESIGN SPECTRUM

JOB NO. 66458-01
FILENAME: SA.WQ1

Prepared by: PKL Date 1/8/94

Checked by: K.P. Date 1/13/94

| | | |
|---|---|---|
| 0.57803 | 0.33000 | 0.2201 |
| 0.66080 | 0.28898 | 0.1928 |
| 0.74356 | 0.25706 | 0.1715 |
| 0.82633 | 0.23151 | 0.1544 |
| 0.90909 | 0.21060 | 0.1405 |
| 1.09848 | 0.17444 | 0.1164 |
| 1.28788 | 0.14890 | 0.0993 |
| 1.47727 | 0.12990 | 0.0866 |
| 1.66667 | 0.11520 | 0.0768 |
| 1.87500 | 0.10263 | 0.0685 |
| 2.08333 | 0.09256 | 0.0617 |
| 2.29167 | 0.08430 | 0.0562 |
| 2.50000 | 0.07740 | 0.0516 |
| 2.83654 | 0.06825 | 0.0455 |
| 3.17308 | 0.06104 | 0.0407 |
| 3.50962 | 0.05521 | 0.0368 |
| 3.84615 | 0.05040 | 0.0336 |
| 4.44712 | 0.03741 | 0.0250 |
| 5.04808 | 0.02884 | 0.0192 |
| 5.64904 | 0.02289 | 0.0153 |
| 6.25000 | 0.01860 | 0.0124 |
| 7.18750 | 0.01403 | 0.0094 |
| 8.12500 | 0.01095 | 0.0073 |
| 9.06250 | 0.00878 | 0.0059 |
| 10.00000 | 0.00720 | 0.0048 |



SHEET NO 334

SHEET NO 335
by PRL 6/2/94
Chkd [illegible] 7/12/94

UNINTERPOLATED (DIRECTLY FROM TABLE 2)

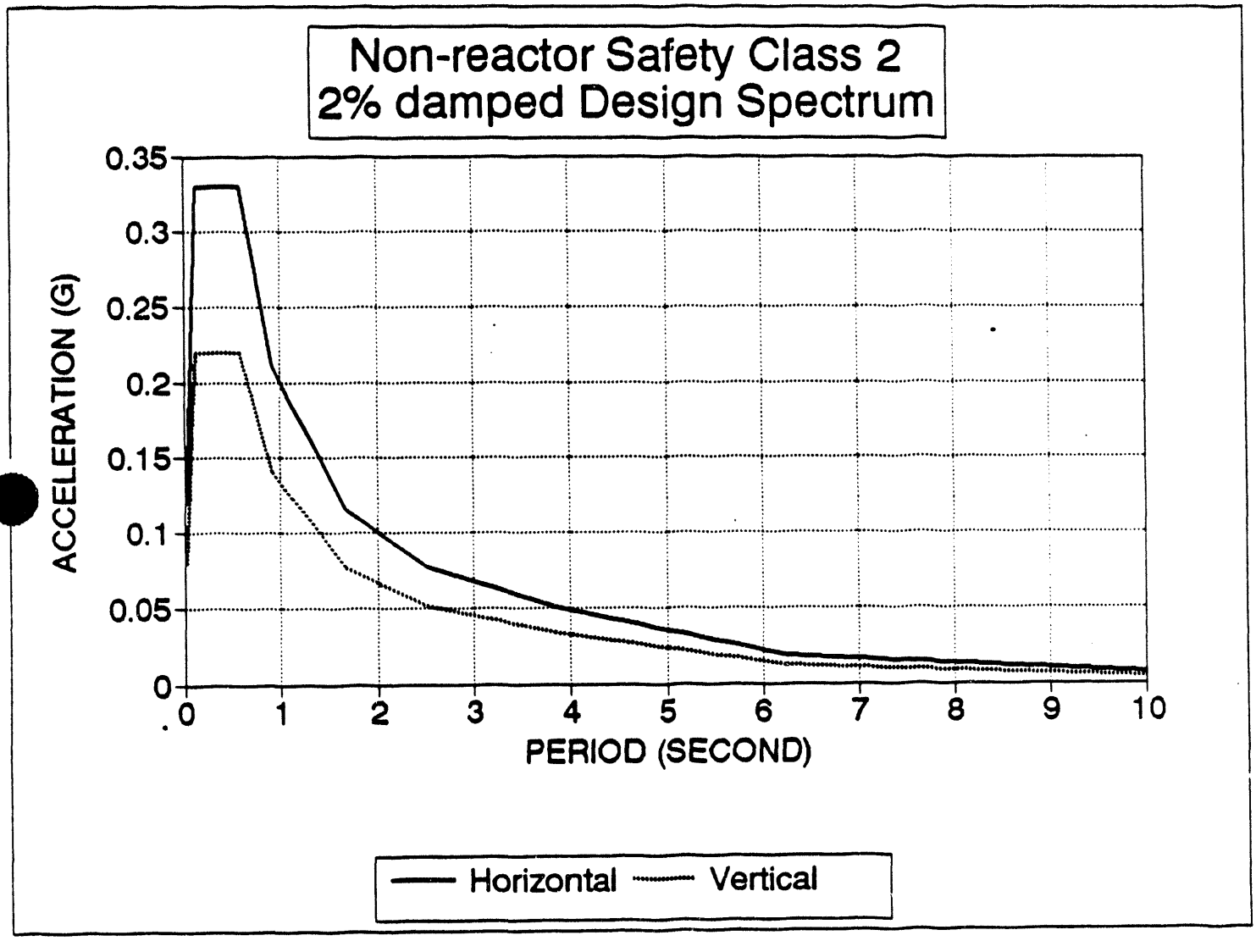

SHEET NO 336
VLL 6/8/94

INTERPOLATED (LOG-LOG ⇒ LINEAR-LINEAR)

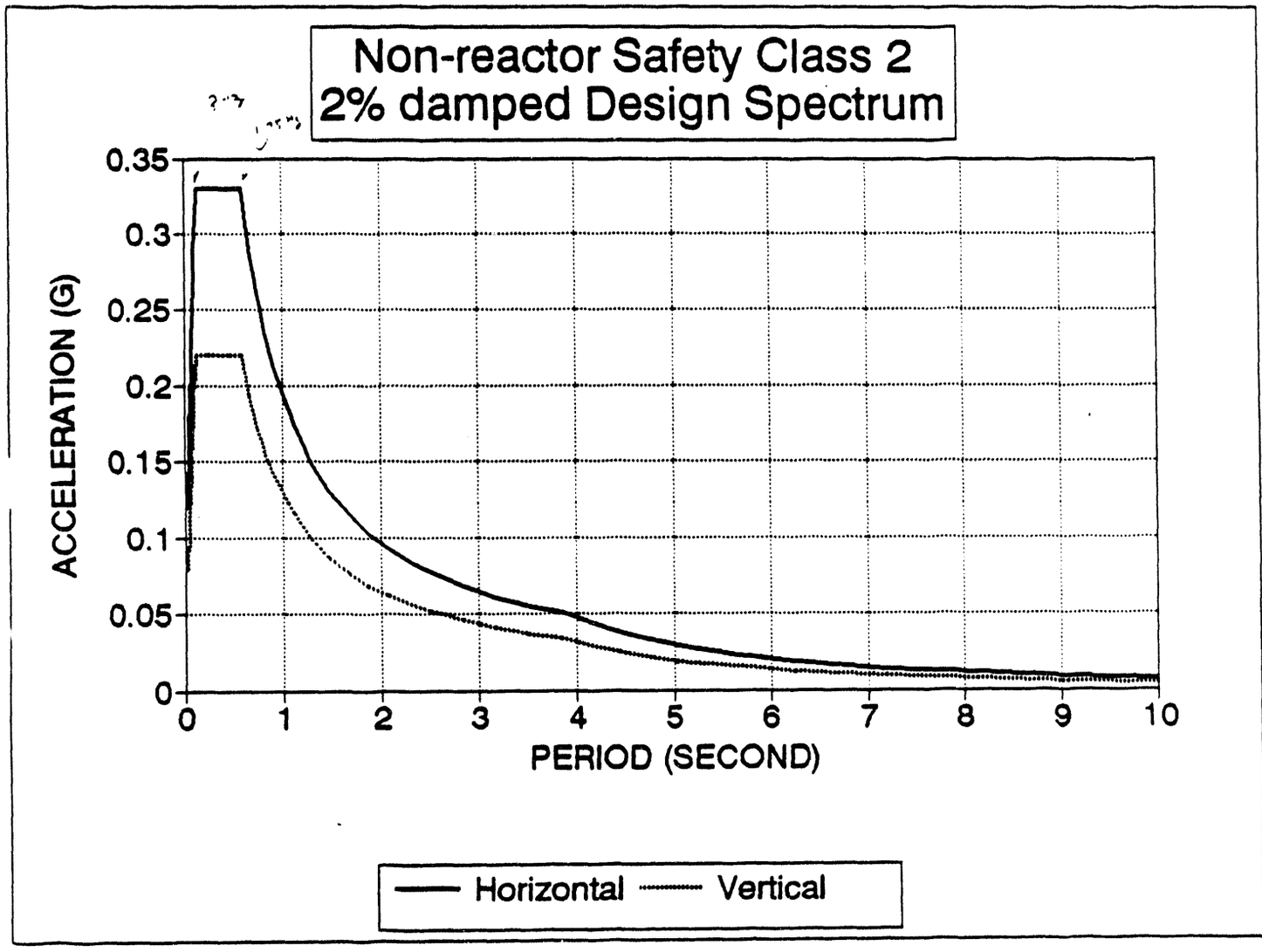

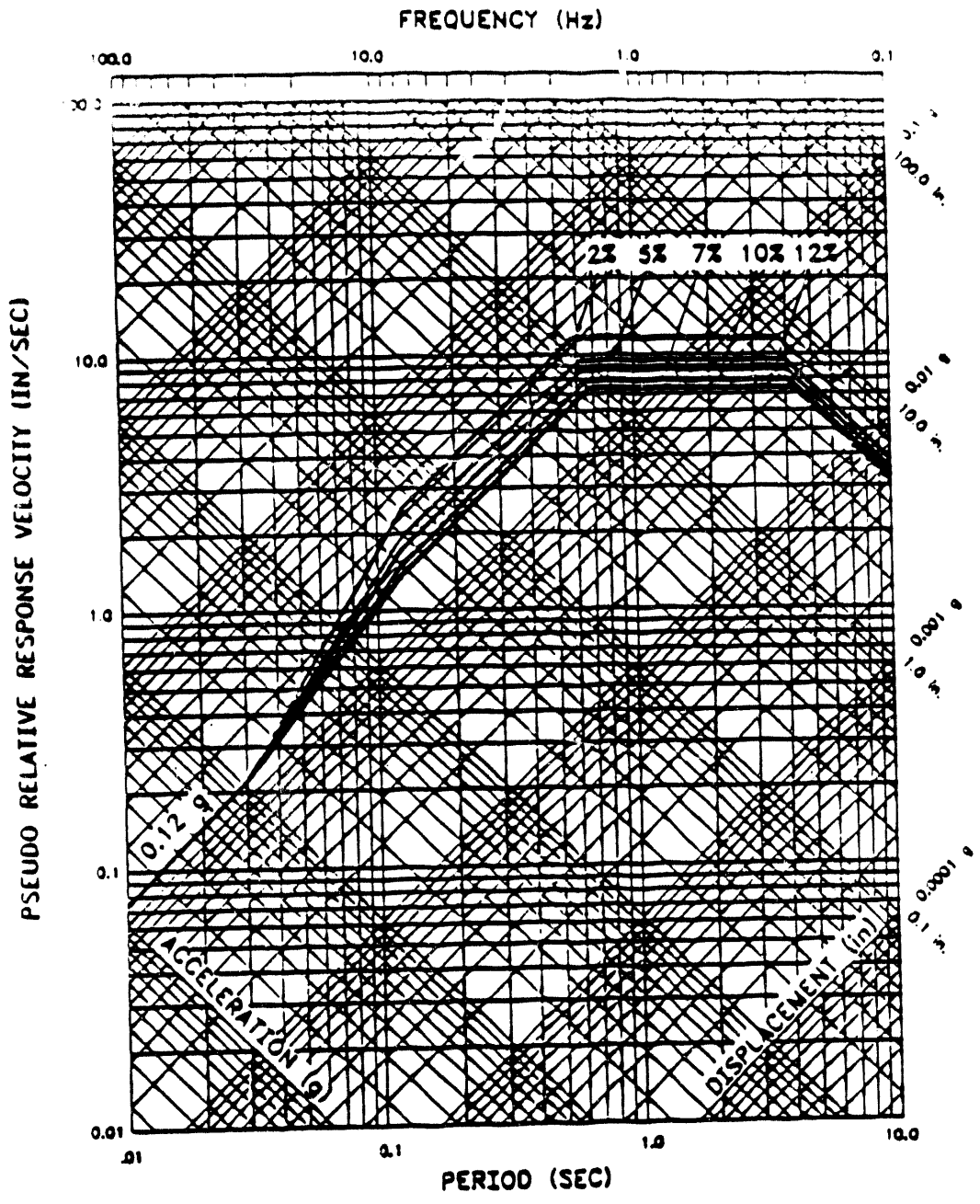


FIGURE 5

Figure 5. Response Spectra - 0.12 *g*,
Non-reactor Safety Class 2
(2%, 5%, 7%, 10% and 12% Critical Damping)

TABLE 2. 0.2 *g* Response-Spectra Control Points
(Corresponds to Figure 3).

| Control Point | T Sec | 2% Damping | | 5% Damping | | 7% Damping | | 10% Damping | | 12% Damping | |
|---|---|---|---|---|---|---|---|---|---|---|---|
| | | f(Hz) | *g* | f(Hz) | *g* | f(Hz) | *g* | f(Hz) | *g* | f(Hz) | *g* |
| E | 10 | 0.10 | 0.012 | 0.10 | 0.0102 | 0.10 | 0.0095 | 0.10 | 0.0088 | 0.10 | 0.0083 |
| | 6.25 | 0.16 | 0.031 | 0.16 | 0.026 | 0.16 | 0.024 | 0.16 | 0.023 | 0.16 | 0.021 |
| D | 3.25 | 0.26 | 0.084 | 0.25 | 0.065 | 0.25 | 0.059 | 0.24 | 0.052 | 0.24 | 0.048 |
| | 2.5 | 0.40 | 0.129 | 0.40 | 0.104 | 0.40 | 0.095 | 0.40 | 0.087 | 0.40 | 0.080 |
| | 1.67 | 0.60 | 0.192 | 0.60 | 0.155 | 0.60 | 0.142 | 0.60 | 0.130 | 0.60 | 0.120 |
| | 0.91 | 1.10 | 0.351 | 1.10 | 0.283 | 1.10 | 0.261 | 1.10 | 0.237 | 1.10 | 0.220 |
| C | .571 | 1.73 | 0.550 | 1.64 | 0.420 | 1.60 | 0.380 | 1.53 | 0.330 | 1.50 | 0.300 |
| B | .125 | 8.00 | 0.550 | 8.00 | 0.420 | 8.00 | 0.380 | 8.00 | 0.330 | 8.00 | 0.300 |
| | .083 | 12.00 | 0.412 | 12.00 | 0.340 | 12.00 | 0.316 | 12.00 | 0.286 | 12.00 | 0.267 |
| | .05 | 20.00 | 0.286 | 20.00 | 0.260 | 20.00 | 0.251 | 20.00 | 0.239 | 20.00 | 0.231 |
| A | .03 | 33.00 | 0.200 | 33.00 | 0.200 | 33.00 | 0.200 | 33.00 | 0.200 | 33.00 | 0.200 |
| A' | .01 | 100.0 | 0.200 | 100.0 | 0.200 | 100.0 | 0.200 | 100.0 | 0.200 | 100.0 | 0.200 |

The response spectra accelerations for the Safety Class 1 0.20 *g* DBE shall be

- scaled by 0.60 to obtain the response spectra accelerations for the Safety Class 2 and 3 0.12 *g* DBE ; and
- scaled by 0.45 to obtain the response spectra accelerations for the Safety Class 4 0.09 *g* DBE.





33.8

**URS Consultants**
**URS/John A. Blume & Associates, Engineers**

Job no. 66481-01 Job WHC/MPF ANALYSIS
Client
Subject MASSES AS STATIC LOADS

Sheet No. 339
Calc. No.
Rev. No.
By PKL Date 6/2/94
Chk'd Date

APPLY MASSES of SHIELDING PLATE & MANIFOLD TUBE AS STATIC LOADS

- MASS of SHIELDING PLATE : $\frac{0.323^K}{386.4} = 0.0008366$

  ZPA = 0.12 g , $F_x = F_y = F_z = 0.12(0.0008366)(386.4) = 0.03876^K$

  APPLY @ CENTER of 4 PIPES (NODES 41, 45, 81, 85) $= \frac{0.03876}{4} = 0.00969^K$

- MASS of MANIFOLD TUBE : $\frac{0.36 + 0.0748^K}{g} = \frac{0.4348}{g}$

  ZPA = 0.12 g $F_x = F_y = F_z = 0.12g\left(\frac{0.4348}{g}\right) = 0.0522^K$

  APPLY @ NODES 121 thru 140 (20 NODES EQUALLY), $F = \frac{0.0522}{20} = 0.00261^K$

- MASS of FLANGE PLATE $\frac{0.1263^K}{g}$

  ZPA = 0.12 g $F_x = F_y = F_z = 0.12g\left(\frac{0.1263}{g}\right) = 0.0152^K$

  APPLY @ CENTER of 4 PIPES (NODES 141, 145, 181, 185) $= \frac{0.0152}{4} = 0.0038^K$

## SECTION 4: SAP90/SAPSTL INPUT DATA

### TABLE OF CONTENTS


| SECTION | CONTENTS | PAGE NO. |
|---|---|---|
| 4.1 | General Discussion | 4.1.1 |
| 4.2 | Input data files for SAP90 | 4.2.1 – 4.2.17 |
| 4.3 | Input data file for SAPSTL | 4.3.1 – 4.3.7 |

## 4.1 General Discussion

File Naming Convention:

The SAP90 or SAPSTL input data files are named using the following file naming convention, for example:

CM-A-04 where:

| | | |
|---|---|---|
| CM | denotes | Camera Model |
| A | denotes | Model A |
| 04 | denotes | Run No. 4 |

CM-A-04S S denotes the SAPSTL run of SAP90 run CM-A-04

At the beginning of each input data file, comment lines are provided for documentation purposes. Also, the input parameters for each section are commented for easy reference. See Page 4.2.2 for sample input data file.

History of Computer Runs:

There were several intermediate SAP90 runs before the model was finalized. The final runs were:

Model A: Camera assembly unit only, with restrains in all 6 directions at the center of Flange plate

Run Ids: CM-A-04 SAP90 file
CM-A-04S SAPSTL file for CM-A-04

Model B: Camera assembly unit is combined with the MPF riser model with the node at 20" riser share the same node with at the center of Flange plate from the camera assembly unit model.

Run Ids: CM-B-01 SAP90 file

PC Diskettes

For the intermediate SAP90 runs, only the input data files are saved on diskettes. For the CM-A-04 and CM-B-01 runs, both input and output files are saved for future references.

## 4.2 Listing of Input Data File

The echoprint of the input data files, CM-A-04 and CM-B-01 are given in this section.

```
WHC/MPF CAMERA ASSEMBLY MODEL  JOB#: 66458-01  RUN: CM-A-04
C ***********************************************************************
C
C   Units = Kips, in   fy=60 ksi   Steel density=490 pcf = 0.0002836 kci
C ***********************************************************************
C
C   Update Log
C
C   Date     By    Version        Description
C   5/23/94  PKL   CM-A-01        Original SAP90 Model
C   5/26/94  PKL   CM-A-02        Adjustment of total wt = 1,227 lbs
C   5/31/94  PKL   CM-A-03        Add one more load case, 1.0DL-1.0EQ
C   6/02/94  PKL   CM-A-04        Shield plate, Manifold tube, & Flange
C                                 plates as static loads (LC=2)
C
C ***********************************************************************
C
C   Computer Models Naming Nomenclature
C   SAP90 files are named using the following terminology:
C        CM-A-01.ext   (*.ext  as described by SAP90 Manual)
C        1234567
C
C   where:    Character      Description
C                1-2         CM= Camera Assembly Model
C                4           A = Model A, B, C.. etc
C                5           Model A, B, C... etc.
C                6-7         Run Number
C
C ***********************************************************************
C   Node numbering scheme:
C   ======================
C
C     1-  99   3" thick Shielding Plate
C   100- 299   3/4" thick Flange Plate
C   300- 399   12.000" below bottom of Flange Plate, upper mast
C   400- 499   22.107" below bottom of Flange Plate, upper mast
C   500- 599   36.000" below bottom of Flange Plate, upper mast
C   600- 699   46.107" below bottom of Flange Plate, upper mast
C   700- 799   60.000" below bottom of Flange Plate, upper mast
C   800- 899   70.107" below bottom of Flange Plate, upper mast
C   900- 999   84.000" below bottom of Flange Plate, upper mast
C  1000-1099   94.107" below bottom of Flange Plate, upper mast
C  1100-1199  108.000" below bottom of Flange Plate, bottom of 1/2" Mating PL.
C  1200-1299   11.500" below top of 1/2" Mating Plate, lower mast
C  1300-1399   21.107" below top of 1/2" Mating Plate, lower mast
C  1400-1499   32.600" below top of 1/2" Mating Plate, lower mast
C  1500-1599   49.600" below top of 1/2" Mating Plate, lower mast
C  1600-1699   66.600" below top of 1/2" Mating Plate, lower mast
C  1700-1799   84.100" below top of 1/2" Mating Plate, lower mast
C  1800-1899   86.413" below top of 1/2" Mating Plate, lower mast
C  2000        Camera Roll Assembly
C
C   Element numbering scheme:
C   =========================
C
C   Beam Elements:   100 - 199   Weightless stiff beams from bolts to master
C                    200 - 299   Steel Pipes
C                    300 - 399   Short stiff beams betwen pipes and X-braces
C                    400 - 499   Cross Braces
C                    500 - 599   3/8" Light Support
C                    600 - 699   Temp. beams connects to camera
C
C   Shell Elements: 1000 -1999   Shielding plates 3" thick
C                   2000 -2999   Manifold tube  2" thick, 4" high
C                   3000 -3999   Flange Plate  3/4" thick
C                   4000 -4999   Mating Plates, bottom plate
```



```
C
C ***********************************************************************
SYSTEM
L=4 Z=20                                          :  4 Load cases
C ***********************************************************************
C
C --- 1. Shielding Plate 3" thick (Dwg No. 42-2)
C
JOINTS
      1  X=   7.778   Y=   0.000   Z=   5.875
      2  X=   7.397   Y=   2.404   Z=   5.875
      3  X=   6.293   Y=   4.572   Z=   5.875
      4  X=   4.572   Y=   6.293   Z=   5.875
      5  X=   2.404   Y=   7.397   Z=   5.875
      6  X=   0.000   Y=   7.778   Z=   5.875
      7  X=  -2.404   Y=   7.397   Z=   5.875
      8  X=  -4.572   Y=   6.293   Z=   5.875
      9  X=  -6.293   Y=   4.572   Z=   5.875
     10  X=  -7.397   Y=   2.404   Z=   5.875
     11  X=  -7.778   Y=   0.000   Z=   5.875
     12  X=  -7.397   Y=  -2.404   Z=   5.875
     13  X=  -6.293   Y=  -4.572   Z=   5.875
     14  X=  -4.572   Y=  -6.293   Z=   5.875
     15  X=  -2.404   Y=  -7.397   Z=   5.875
     16  X=   0.000   Y=  -7.778   Z=   5.875
     17  X=   2.404   Y=  -7.397   Z=   5.875
     18  X=   4.572   Y=  -6.293   Z=   5.875
     19  X=   6.293   Y=  -4.572   Z=   5.875
     20  X=   7.397   Y=  -2.404   Z=   5.875
C
     21  X=  10.500   Y=   0.000   Z=   5.875
     22  X=   9.986   Y=   3.245   Z=   5.875
     23  X=   8.495   Y=   6.172   Z=   5.875
     24  X=   6.172   Y=   8.495   Z=   5.875
     25  X=   3.245   Y=   9.986   Z=   5.875
     26  X=   0.000   Y=  10.500   Z=   5.875
     27  X=  -3.245   Y=   9.986   Z=   5.875
     28  X=  -6.172   Y=   8.495   Z=   5.875
     29  X=  -8.495   Y=   6.172   Z=   5.875
     30  X=  -9.986   Y=   3.245   Z=   5.875
     31  X= -10.500   Y=   0.000   Z=   5.875
     32  X=  -9.986   Y=  -3.245   Z=   5.875
     33  X=  -8.495   Y=  -6.172   Z=   5.875
     34  X=  -6.172   Y=  -8.495   Z=   5.875
     35  X=  -3.245   Y=  -9.986   Z=   5.875
     36  X=   0.000   Y= -10.500   Z=   5.875
     37  X=   3.245   Y=  -9.986   Z=   5.875
     38  X=   6.172   Y=  -8.495   Z=   5.875
     39  X=   8.495   Y=  -6.172   Z=   5.875
     40  X=   9.986   Y=  -3.245   Z=   5.875
C
     41  X=  -5.500   Y=   5.500   Z=   5.875
     42  X=  -2.404   Y=   5.500   Z=   5.875
     43  X=   0.000   Y=   5.500   Z=   5.875
     44  X=   2.404   Y=   5.500   Z=   5.875
     45  X=   5.500   Y=   5.500   Z=   5.875
C
     51  X=  -5.500   Y=   2.404   Z=   5.875
     52  X=  -2.404   Y=   2.404   Z=   5.875
     53  X=   0.000   Y=   2.404   Z=   5.875
     54  X=   2.404   Y=   2.404   Z=   5.875
     55  X=   5.500   Y=   2.404   Z=   5.875
C
     61  X=  -5.500   Y=   0.000   Z=   5.875
     62  X=  -2.404   Y=   0.000   Z=   5.875
     63  X=   0.000   Y=   0.000   Z=   5.875
```

```
      64  X=    2.404    Y=    0.000    Z=    5.875
      65  X=    5.500    Y=    0.000    Z=    5.875
C
      71  X=   -5.500    Y=   -2.404    Z=    5.875
      72  X=   -2.404    Y=   -2.404    Z=    5.875
      73  X=    0.000    Y=   -2.404    Z=    5.875
      74  X=    2.404    Y=   -2.404    Z=    5.875
      75  X=    5.500    Y=   -2.404    Z=    5.875
C
      81  X=   -5.500    Y=   -5.500    Z=    5.875
      82  X=   -2.404    Y=   -5.500    Z=    5.875
      83  X=    0.000    Y=   -5.500    Z=    5.875
      84  X=    2.404    Y=   -5.500    Z=    5.875
      85  X=    5.500    Y=   -5.500    Z=    5.875
C
C --- 2.  Flange Plate 3/4" thick  (Dwg No. 42-7)
C
C
     101  X=    7.778    Y=    0.000    Z=    0.000
     102  X=    7.397    Y=    2.404    Z=    0.000
     103  X=    6.293    Y=    4.572    Z=    0.000
     104  X=    4.572    Y=    6.293    Z=    0.000
     105  X=    2.404    Y=    7.397    Z=    0.000
     106  X=    0.000    Y=    7.778    Z=    0.000
     107  X=   -2.404    Y=    7.397    Z=    0.000
     108  X=   -4.572    Y=    6.293    Z=    0.000
     109  X=   -6.293    Y=    4.572    Z=    0.000
     110  X=   -7.397    Y=    2.404    Z=    0.000
     111  X=   -7.778    Y=    0.000    Z=    0.000
     112  X=   -7.397    Y=   -2.404    Z=    0.000
     113  X=   -6.293    Y=   -4.572    Z=    0.000
     114  X=   -4.572    Y=   -6.293    Z=    0.000
     115  X=   -2.404    Y=   -7.397    Z=    0.000
     116  X=    0.000    Y=   -7.778    Z=    0.000
     117  X=    2.404    Y=   -7.397    Z=    0.000
     118  X=    4.572    Y=   -6.293    Z=    0.000
     119  X=    6.293    Y=   -4.572    Z=    0.000
     120  X=    7.397    Y=   -2.404    Z=    0.000
     121  X=   10.500    Y=    0.000    Z=    0.000
     122  X=    9.986    Y=    3.245    Z=    0.000
     123  X=    8.495    Y=    6.172    Z=    0.000
     124  X=    6.172    Y=    8.495    Z=    0.000
     125  X=    3.245    Y=    9.986    Z=    0.000
     126  X=    0.000    Y=   10.500    Z=    0.000
     127  X=   -3.245    Y=    9.986    Z=    0.000
     128  X=   -6.172    Y=    8.495    Z=    0.000
     129  X=   -8.495    Y=    6.172    Z=    0.000
     130  X=   -9.986    Y=    3.245    Z=    0.000
     131  X=  -10.500    Y=    0.000    Z=    0.000
     132  X=   -9.986    Y=   -3.245    Z=    0.000
     133  X=   -8.495    Y=   -6.172    Z=    0.000
     134  X=   -6.172    Y=   -8.495    Z=    0.000
     135  X=   -3.245    Y=   -9.986    Z=    0.000
     136  X=    0.000    Y=  -10.500    Z=    0.000
     137  X=    3.245    Y=   -9.986    Z=    0.000
     138  X=    6.172    Y=   -8.495    Z=    0.000
     139  X=    8.495    Y=   -6.172    Z=    0.000
     140  X=    9.986    Y=   -3.245    Z=    0.000
C
     141  X=   -5.500    Y=    5.500    Z=    0.000
     142  X=   -2.404    Y=    5.500    Z=    0.000
     143  X=    0.000    Y=    5.500    Z=    0.000
     144  X=    2.404    Y=    5.500    Z=    0.000
     145  X=    5.500    Y=    5.500    Z=    0.000
C
     151  X=   -5.500    Y=    2.404    Z=    0.000
```





```
     152  X=   -2.404    Y=    2.404    Z=    0.000
     153  X=    0.000    Y=    2.404    Z=    0.000
     154  X=    2.404    Y=    2.404    Z=    0.000
     155  X=    5.500    Y=    2.404    Z=    0.000
C
     161  X=   -5.500    Y=    0.000    Z=    0.000
     162  X=   -2.404    Y=    0.000    Z=    0.000
     163  X=    0.000    Y=    0.000    Z=    0.000
     164  X=    2.404    Y=    0.000    Z=    0.000
     165  X=    5.500    Y=    0.000    Z=    0.000
C
     171  X=   -5.500    Y=   -2.404    Z=    0.000
     172  X=   -2.404    Y=   -2.404    Z=    0.000
     173  X=    0.000    Y=   -2.404    Z=    0.000
     174  X=    2.404    Y=   -2.404    Z=    0.000
     175  X=    5.500    Y=   -2.404    Z=    0.000
C
     181  X=   -5.500    Y=   -5.500    Z=    0.000
     182  X=   -2.404    Y=   -5.500    Z=    0.000
     183  X=    0.000    Y=   -5.500    Z=    0.000
     184  X=    2.404    Y=   -5.500    Z=    0.000
     185  X=    5.500    Y=   -5.500    Z=    0.000
C
     201  X=   12.500    Y=    0.000    Z=    0.000
     202  X=   11.888    Y=    3.863    Z=    0.000
     203  X=   10.113    Y=    7.347    Z=    0.000
     204  X=    7.347    Y=   10.113    Z=    0.000
     205  X=    3.863    Y=   11.888    Z=    0.000
     206  X=    0.000    Y=   12.500    Z=    0.000
     207  X=   -3.863    Y=   11.888    Z=    0.000
     208  X=   -7.347    Y=   10.113    Z=    0.000
     209  X=  -10.113    Y=    7.347    Z=    0.000
     210  X=  -11.888    Y=    3.863    Z=    0.000
     211  X=  -12.500    Y=    0.000    Z=    0.000
     212  X=  -11.888    Y=   -3.863    Z=    0.000
     213  X=  -10.113    Y=   -7.347    Z=    0.000
     214  X=   -7.347    Y=  -10.113    Z=    0.000
     215  X=   -3.863    Y=  -11.888    Z=    0.000
     216  X=    0.000    Y=  -12.500    Z=    0.000
     217  X=    3.863    Y=  -11.888    Z=    0.000
     218  X=    7.347    Y=  -10.113    Z=    0.000
     219  X=   10.113    Y=   -7.347    Z=    0.000
     220  X=   11.888    Y=   -3.863    Z=    0.000
C
     221  X=   13.750    Y=    0.000    Z=    0.000
     222  X=   13.077    Y=    4.249    Z=    0.000
     223  X=   11.124    Y=    8.082    Z=    0.000
     224  X=    8.082    Y=   11.124    Z=    0.000
     225  X=    4.249    Y=   13.077    Z=    0.000
     226  X=    0.000    Y=   13.750    Z=    0.000
     227  X=   -4.249    Y=   13.077    Z=    0.000
     228  X=   -8.082    Y=   11.124    Z=    0.000
     229  X=  -11.124    Y=    8.082    Z=    0.000
     230  X=  -13.077    Y=    4.249    Z=    0.000
     231  X=  -13.750    Y=    0.000    Z=    0.000
     232  X=  -13.077    Y=   -4.249    Z=    0.000
     233  X=  -11.124    Y=   -8.082    Z=    0.000
     234  X=   -8.082    Y=  -11.124    Z=    0.000
     235  X=   -4.249    Y=  -13.077    Z=    0.000
     236  X=    0.000    Y=  -13.750    Z=    0.000
     237  X=    4.249    Y=  -13.077    Z=    0.000
     238  X=    8.082    Y=  -11.124    Z=    0.000
     239  X=   11.124    Y=   -8.082    Z=    0.000
     240  X=   13.077    Y=   -4.249    Z=    0.000
C
C    Node 163 connect to the plate;
```



423

```
C     Node 299 is the MASTER node w/ restraints in 6 DOF and connects to beams.
C
      299   X=    0.000       Y=    0.000       Z=    0.000
C
C --- 12.000" below bottom of Flange Plate, upper mast
C
      301   X=   -5.500       Y=   -5.500       Z=  -12.875
      302   X=   -5.500       Y=    5.500       Z=  -12.875
      303   X=    5.500       Y=    5.500       Z=  -12.875
      304   X=    5.500       Y=   -5.500       Z=  -12.875
C
      311   X=-5.5-.736       Y=-5.5+.587       Z=  -12.875
      312   X=-5.5+.587       Y= 5.5+.736       Z=  -12.875
      313   X= 5.5+.736       Y= 5.5-.587       Z=  -12.875
      314   X= 5.5-.587       Y=-5.5-.736       Z=  -12.875
C
C --- 22.107" below bottom of Flange Plate, upper mast
C
      401   X=   -5.500       Y=   -5.500       Z=  -22.982
      402   X=   -5.500       Y=    5.500       Z=  -22.982
      403   X=    5.500       Y=    5.500       Z=  -22.982
      404   X=    5.500       Y=   -5.500       Z=  -22.982
C
      411   X=-5.5+.587       Y=-5.5-.736       Z=  -22.982
      412   X=-5.5-.736       Y= 5.5-.587       Z=  -22.982
      413   X= 5.5-.587       Y= 5.5+.736       Z=  -22.982
      414   X= 5.5+.736       Y=-5.5+.587       Z=  -22.982
C
C --- 36.000" below bottom of Flange Plate, upper mast
C
      501   X=   -5.500       Y=   -5.500       Z=  -36.875
      502   X=   -5.500       Y=    5.500       Z=  -36.875
      503   X=    5.500       Y=    5.500       Z=  -36.875
      504   X=    5.500       Y=   -5.500       Z=  -36.875
C
      511   X=-5.5-.736       Y=-5.5+.587       Z=  -36.875
      512   X=-5.5+.587       Y= 5.5+.736       Z=  -36.875
      513   X= 5.5+.736       Y= 5.5-.587       Z=  -36.875
      514   X= 5.5-.587       Y=-5.5-.736       Z=  -36.875
C
C --- 46.107" below bottom of Flange Plate, upper mast
C
      601   X=   -5.500       Y=   -5.500       Z=  -46.982
      602   X=   -5.500       Y=    5.500       Z=  -46.982
      603   X=    5.500       Y=    5.500       Z=  -46.982
      604   X=    5.500       Y=   -5.500       Z=  -46.982
C
      611   X=-5.5+.587       Y=-5.5-.736       Z=  -46.982
      612   X=-5.5-.736       Y= 5.5-.587       Z=  -46.982
      613   X= 5.5-.587       Y= 5.5+.736       Z=  -46.982
      614   X= 5.5+.736       Y=-5.5+.587       Z=  -46.982
C
C -- 60.000" below bottom of Flange Plate, upper mast
C
      701   X=   -5.500       Y=   -5.500       Z=  -60.875
      702   X=   -5.600       Y=    5.500       Z=  -60.875
      703   X=    5.500       Y=    5.500       Z=  -60.875
      704   X=    5.500       Y=   -5.500       Z=  -60.875
C
      711   X=-5.5-.736       Y=-5.5+.587       Z=  -60.875
      712   X=-5.5+.587       Y= 5.5+.736       Z=  -60.875
      713   X= 5.5+.736       Y= 5.5-.587       Z=  -60.875
      714   X= 5.5-.587       Y=-5.5-.736       Z=  -60.875
C
C --- 70.107" below bottom of Flange Plate, upper mast
C
```



```
      801   X=   -5.500       Y=   -5.500       Z=  -70.982
      802   X=   -5.500       Y=    5.500       Z=  -70.982
      803   X=    5.500       Y=    5.500       Z=  -70.982
      804   X=    5.500       Y=   -5.500       Z=  -70.982
C
      811   X=-5.5+.587       Y=-5.5-.736       Z=  -70.982
      812   X=-5.5-.736       Y= 5.5-.587       Z=  -70.982
      813   X= 5.5-.587       Y= 5.5+.736       Z=  -70.982
      814   X= 5.5+.736       Y=-5.5+.587       Z=  -70.982
C
C --- 84.000" below bottom of Flange Plate, upper mast
C
      901   X=   -5.500       Y=   -5.500       Z=  -84.875
      902   X=   -5.500       Y=    5.500       Z=  -84.875
      903   X=    5.500       Y=    5.500       Z=  -84.875
      904   X=    5.500       Y=   -5.500       Z=  -84.875
C
      911   X=-5.5-.736       Y=-5.5+.587       Z=  -84.875
      912   X=-5.5+.587       Y= 5.5+.736       Z=  -84.875
      913   X= 5.5+.736       Y= 5.5-.587       Z=  -84.875
      914   X= 5.5-.587       Y=-5.5-.736       Z=  -84.875
C
C --- 94.107" below bottom of Flange Plate, upper mast
C
     1001   X=   -5.500       Y=   -5.500       Z=  -94.982
     1002   X=   -5.500       Y=    5.500       Z=  -94.982
     1003   X=    5.500       Y=    5.500       Z=  -94.982
     1004   X=    5.500       Y=   -5.500       Z=  -94.982
C
     1011   X=-5.5+.587       Y=-5.5-.736       Z=  -94.982
     1012   X=-5.5-.736       Y= 5.5-.587       Z=  -94.982
     1013   X= 5.5-.587       Y= 5.5+.736       Z=  -94.982
     1014   X= 5.5+.736       Y=-5.5+.587       Z=  -94.982
C
C --- Lower Mast Assembly  1/2" Mating Plate
C
     1101   X=   -5.500       Y=   -5.500       Z= -108.125
     1102   X=   -5.500       Y=    5.500       Z= -108.125
     1103   X=    5.500       Y=    5.500       Z= -108.125
     1104   X=    5.500       Y=   -5.500       Z= -108.125
C
C --- 11" below Mating Plate, Lower Mast
C
     1201   X=   -5.500       Y=   -5.500       Z= -119.375
     1202   X=   -5.500       Y=    5.500       Z= -119.375
     1203   X=    5.500       Y=    5.500       Z= -119.375
     1204   X=    5.500       Y=   -5.500       Z= -119.375
C
     1211   X=-5.5-.736       Y=-5.5+.587       Z= -119.375
     1212   X=-5.5+.587       Y= 5.5+.736       Z= -119.375
     1213   X= 5.5+.736       Y= 5.5-.587       Z= -119.375
     1214   X= 5.5-.587       Y=-5.5-.736       Z= -119.375
C
C --- 21.107" below Mating Plate, Lower Mast
C
     1301   X=   -5.500       Y=   -5.500       Z= -129.482
     1302   X=   -5.500       Y=    5.500       Z= -129.482
     1303   X=    5.500       Y=    5.500       Z= -129.482
     1304   X=    5.500       Y=   -5.500       Z= -129.482
C
     1311   X=-5.5+.587       Y=-5.5-.736       Z= -129.482
     1312   X=-5.5-.736       Y= 5.5-.587       Z= -129.482
     1313   X= 5.5-.587       Y= 5.5+.736       Z= -129.482
     1314   X= 5.5+.736       Y=-5.5+.587       Z= -129.482
C
C --- Section B  32" below Mating Plate, Lower Mast
```

```
C
    1401   X=   -5.500      Y=   -5.500      Z= -141.083
    1402   X=   -5.500      Y=    5.500      Z= -141.083
    1403   X=    5.500      Y=    5.500      Z= -141.083
    1404   X=    5.500      Y=   -5.500      Z= -141.083
C
C --- Section C  49" below Mating Plate, Lower Mast
C
    1501   X=   -5.500      Y=   -5.500      Z= -158.083
    1502   X=   -5.500      Y=    5.500      Z= -158.083
    1503   X=    5.500      Y=    5.500      Z= -158.083
    1504   X=    5.500      Y=   -5.500      Z= -158.083
C
C --- Section D  115" below Mating Plate, Lower Mast
C
    1601   X=   -5.500      Y=   -5.500      Z= -175.083
    1602   X=   -5.500      Y=    5.500      Z= -175.083
    1603   X=    5.500      Y=    5.500      Z= -175.083
    1604   X=    5.500      Y=   -5.500      Z= -175.083
C
C --- Section A Upper portion, 84.1" below Mating Plate, Lower Mast
C
    1701   X=   -5.500      Y=   -5.500      Z= -191.975
    1702   X=   -5.500      Y=    5.500      Z= -191.975
    1703   X=    5.500      Y=    5.500      Z= -191.975
    1704   X=    5.500      Y=   -5.500      Z= -191.975
C
C --- Section A  Bottom plate, 96.6" below Mating Plate, Lower Mast
C
    1801   X=   -5.500      Y=   -5.500      Z= -194.225
    1802   X=   -5.500      Y=    5.500      Z= -194.225
    1803   X=    5.500      Y=    5.500      Z= -194.225
    1804   X=    5.500      Y=   -5.500      Z= -194.225
C
C --- Camera Roll Assembly
C     Conservatively, assume C.G. @ 20.6" below Lower Mast Bottom Plate
C     14.5" eccentricity at Pipe 4
C
    2001   X=    5.500      Y=   -5.500      Z= -194.225-20.6

C ************************************************************************
RESTRAINTS
C
    299   299 1  R=1,1,1,1,1,1

C ************************************************************************
C    SPRINGS
C       299   K=9E12,9E12,9E12,9E15,9E15,9E15
C
C
C ************************************************************************
FRAME
NM=7    X=0  Y=0  Z=-1,-1,-1,-1
C
C --- Material properties
C  ...Stiff beams which connect from Master node No. 299 to bolt holes
  1  A=9E9  J=9E9  I=9E9,9E9  AS=9E9,9E9  E=1   G=1   W=0.0   M=0.0
C
C  ...Steel Pipes (Dwg No. 42-8) 1 1/4 ips, W= area* (wt.adjmt) * (wt.of steel)
C
  2 SH=P T=1.66,0.14 E=29000. W=.6685*.935*.49/1728 M=.669*.935*.49/1728/386.4
C
C  ...3/16" Thick X-braces (Dwg No. 40-5), W= area* (wt.adjmt) * (wt.of steel)
  3 SH=R T=1,0.1875  E=29000. W=.188*.993*.49/1728 M=.188*.993*.49/1728/386.4
C
C  ...3/8" Thick light supp (Dwg No. 40-4) Lower Mast Sections B-B, C-C
```



```
C                                        W= area* (wt.adjmt) * (wt.of steel)
C
  4 SH=R T=1,0.375   E=29000. W=.375*.88*.49/1728 M=.375*.88*.49/1728/386.4
C
C  ...Short link from center of pipes to braces
C
  5  A=9E4 J=9E6  I=9E6,9E6   AS=9E6,9E6  E=1. G=1. W=0.0 M=0.0
C
C  ...Gas Pipes (Dwg No. 40-12) Lower Mast Section A-A
C                                        W= area* (wt.adjmt) * (wt.of steel)
C
  6 SH=P T=0.675,0.15 E=29000. W=.247*.867*.49/1728 M=.247*.867*.49/1728/386.4
C
C  ...Stiff beams which connect from lower mast bottom plate to C.G. of camera
C
  7  A=9E5  J=9E7  I=9E7,9E7  AS=9E5,9E5  E=1   G=1   W=0.0   M=0.0
C
C --- Weightless stiff beams connect from bolt holes to Master node 299
C
  101 299  201 M=1  LP=0,63          :  LR=0,1,0,0,1,1
  102 299  202 M=1  LP=0,63          :  LR=0,1,0,0,1,1
  103 299  203 M=1  LP=0,63          :  LR=0,1,0,0,1,1
  104 299  204 M=1  LP=0,63          :  LR=0,1,0,0,1,1
  105 299  205 M=1  LP=0,63          :  LR=0,1,0,0,1,1
  106 299  206 M=1  LP=0,63          :  LR=0,1,0,0,1,1
  107 299  207 M=1  LP=0,63          :  LR=0,1,0,0,1,1
  108 299  208 M=1  LP=0,63          :  LR=0,1,0,0,1,1
  109 299  209 M=1  LP=0,63          :  LR=0,1,0,0,1,1
  110 299  210 M=1  LP=0,63          :  LR=0,1,0,0,1,1
  111 299  211 M=1  LP=0,63          :  LR=0,1,0,0,1,1
  112 299  212 M=1  LP=0,63          :  LR=0,1,0,0,1,1
  113 299  213 M=1  LP=0,63          :  LR=0,1,0,0,1,1
  114 299  214 M=1  LP=0,63          :  LR=0,1,0,0,1,1
  115 299  215 M=1  LP=0,63          :  LR=0,1,0,0,1,1
  116 299  216 M=1  LP=0,63          :  LR=0,1,0,0,1,1
  117 299  217 M=1  LP=0,63          :  LR=0,1,0,0,1,1
  118 299  218 M=1  LP=0,63          :  LR=0,1,0,0,1,1
  119 299  219 M=1  LP=0,63          :  LR=0,1,0,0,1,1
  120 299  220 M=1  LP=0,63          :  LR=0,1,0,0,1,1
C
C --- Steel Pipes
C
  201  181  301 M=2  LP=3,0
  202  141  302 M=2  LP=3,0
  203  145  303 M=2  LP=3,0
  204  185  304 M=2  LP=3,0
  205  301  401 M=2  LP=3,0
  206  302  402 M=2  LP=3,0
  207  303  403 M=2  LP=3,0
  208  304  404 M=2  LP=3,0
  209  401  501 M=2  LP=3,0
  210  402  502 M=2  LP=3,0
  211  403  503 M=2  LP=3,0
  212  404  504 M=2  LP=3,0
  213  401  501 M=2  LP=3,0
  214  402  502 M=2  LP=3,0
  215  403  503 M=2  LP=3,0
  216  404  504 M=2  LP=3,0
  217  501  601 M=2  LP=3,0
  218  502  602 M=2  LP=3,0
  219  503  603 M=2  LP=3,0
  220  504  604 M=2  LP=3,0
  221  601  701 M=2  LP=3,0
  222  602  702 M=2  LP=3,0
  223  603  703 M=2  LP=3,0
  224  604  704 M=2  LP=3,0
```





+ 2 5

```
225  701  801 M=2  LP=3,0
226  702  802 M=2  LP=3,0
227  703  803 M=2  LP=3,0
228  704  804 M=2  LP=3,0
229  801  901 M=2  LP=3,0
230  802  902 M=2  LP=3,0
231  803  903 M=2  LP=3,0
232  804  904 M=2  LP=3,0
233  901 1001 M=2  LP=3,0
234  902 1002 M=2  LP=3,0
235  903 1003 M=2  LP=3,0
236  904 1004 M=2  LP=3,0
237 1001 1101 M=2  LP=3,0
238 1002 1102 M=2  LP=3,0
239 1003 1103 M=2  LP=3,0
240 1004 1104 M=2  LP=3,0
241 1101 1201 M=2  LP=3,0
242 1102 1202 M=2  LP=3,0
243 1103 1203 M=2  LP=3,0
244 1104 1204 M=2  LP=3,0
245 1201 1301 M=2  LP=3,0
246 1202 1302 M=2  LP=3,0
247 1203 1303 M=2  LP=3,0
248 1204 1304 M=2  LP=3,0
249 1301 1401 M=2  LP=3,0
250 1302 1402 M=2  LP=3,0
251 1303 1403 M=2  LP=3,0
252 1304 1404 M=2  LP=3,0
253 1401 1501 M=2  LP=3,0
254 1402 1502 M=2  LP=3,0
255 1403 1503 M=2  LP=3,0
256 1404 1504 M=2  LP=3,0
257 1501 1601 M=2  LP=3,0
258 1502 1602 M=2  LP=3,0
259 1503 1603 M=2  LP=3,0
260 1504 1604 M=2  LP=3,0
261 1601 1701 M=2  LP=3,0
262 1602 1702 M=2  LP=3,0
263 1603 1703 M=2  LP=3,0
264 1604 1704 M=2  LP=3,0
265 1701 1801 M=2  LP=3,0
266 1702 1802 M=2  LP=3,0
267 1703 1803 M=2  LP=3,0
268 1704 1804 M=2  LP=3,0
C
C --- Short stiff beams between center of holes to Cross braces
C
301  301  311 M=5  LP=0,81   :  LR=0,1,0,0,1,1
302  302  312 M=5  LP=0,41   :  LR=0,1,0,0,1,1
303  303  313 M=5  LP=0,45   :  LR=0,1,0,0,1,1
304  304  314 M=5  LP=0,85   :  LR=0,1,0,0,1,1
305  401  411 M=5  LP=0,81   :  LR=0,1,0,0,1,1
306  402  412 M=5  LP=0,41   :  LR=0,1,0,0,1,1
307  403  413 M=5  LP=0,45   :  LR=0,1,0,0,1,1
308  404  414 M=5  LP=0,85   :  LR=0,1,0,0,1,1
309  501  511 M=5  LP=0,81   :  LR=0,1,0,0,1,1
310  502  512 M=5  LP=0,41   :  LR=0,1,0,0,1,1
311  503  513 M=5  LP=0,45   :  LR=0,1,0,0,1,1
312  504  514 M=5  LP=0,85   :  LR=0,1,0,0,1,1
313  601  611 M=5  LP=0,81   :  LR=0,1,0,0,1,1
314  602  612 M=5  LP=0,41   :  LR=0,1,0,0,1,1
315  603  613 M=5  LP=0,45   :  LR=0,1,0,0,1,1
316  604  614 M=5  LP=0,85   :  LR=0,1,0,0,1,1
317  701  711 M=5  LP=0,81   :  LR=0,1,0,0,1,1
318  702  712 M=5  LP=0,41   :  LR=0,1,0,0,1,1
319  703  713 M=5  LP=0,45   :  LR=0,1,0,0,1,1
```



```
320  704  714 M=5  LP=0,85   :  LR=0,1,0,0,1,1
321  801  811 M=5  LP=0,81   :  LR=0,1,0,0,1,1
322  802  812 M=5  LP=0,41   :  LR=0,1,0,0,1,1
323  803  813 M=5  LP=0,45   :  LR=0,1,0,0,1,1
324  804  814 M=5  LP=0,85   :  LR=0,1,0,0,1,1
325  901  911 M=5  LP=0,81   :  LR=0,1,0,0,1,1
326  902  912 M=5  LP=0,41   :  LR=0,1,0,0,1,1
327  903  913 M=5  LP=0,45   :  LR=0,1,0,0,1,1
328  904  914 M=5  LP=0,85   :  LR=0,1,0,0,1,1
329 1001 1011 M=5  LP=0,81   :  LR=0,1,0,0,1,1
330 1002 1012 M=5  LP=0,41   :  LR=0,1,0,0,1,1
331 1003 1013 M=5  LP=0,45   :  LR=0,1,0,0,1,1
332 1004 1014 M=5  LP=0,85   :  LR=0,1,0,0,1,1
333 1201 1211 M=5  LP=0,81   :  LR=0,1,0,0,1,1
334 1202 1212 M=5  LP=0,41   :  LR=0,1,0,0,1,1
335 1203 1213 M=5  LP=0,45   :  LR=0,1,0,0,1,1
336 1204 1214 M=5  LP=0,85   :  LR=0,1,0,0,1,1
337 1301 1311 M=5  LP=0,81   :  LR=0,1,0,0,1,1
338 1302 1312 M=5  LP=0,41   :  LR=0,1,0,0,1,1
339 1303 1313 M=5  LP=0,45   :  LR=0,1,0,0,1,1
340 1304 1314 M=5  LP=0,85   :  LR=0,1,0,0,1,1
C
C --- Cross Braces
C
401  411  314 M=3  LP=0,611
402  412  311 M=3  LP=0,612
403  413  312 M=3  LP=0,613
404  414  313 M=3  LP=0,614
405  611  514 M=3  LP=0,411
406  612  511 M=3  LP=0,412
407  613  512 M=3  LP=0,413
408  614  513 M=3  LP=0,414
409  811  714 M=3  LP=0,411
410  812  711 M=3  LP=0,412
411  813  712 M=3  LP=0,413
412  814  713 M=3  LP=0,414
413 1011  914 M=3  LP=0,411
414 1012  911 M=3  LP=0,412
415 1013  912 M=3  LP=0,413
416 1014  913 M=3  LP=0,414
417 1311 1214 M=3  LP=0,411
418 1312 1211 M=3  LP=0,412
419 1313 1212 M=3  LP=0,413
420 1314 1213 M=3  LP=0,414
C
C --- 3/8" Light support (Dwg no. 40-4), Lower mast Section B-B, C-C
C
501 1401 1403 M=4  LP=0,1402  RE=0.803,0.803
502 1501 1503 M=4  LP=0,1502  RE=0.803,0.803
503 1601 1603 M=4  LP=0,1602  RE=0.803,0.803
C
C --- 3/8" Gas Pipe (Dwg no. 40-12), Lower mast Section A-A
C
504 1702 1703 M=6  LP=0,1704  RE=0.803,0.803
505 1704 1703 M=6  LP=0,1701  RE=0.803,0.803
C
C --- Stiff beam connections from Lower Mast bottom plates to Camera
C
601 1801 2001 M=7  LP=3
602 1802 2001 M=7  LP=3
603 1803 2001 M=7  LP=3
604 1804 2001 M=7  LP=3

C
C ***********************************************************************
SHELL
```





426

```
 NM=5  O=1   X=0  Y=0  Z=-1,-1,-1,-1
C
C  W = (wt. of steel) * (wt. adjustment)
C  Masses of Shield plate, Manifold tube & Flange plate are applied
C  as static load condition 2.
C
 1    E=29000. U=0.25 W=0.49*1.113/1728  M=0.                      :Shield Plate
 2    E=29000. U=0.25 W=0.49*1.986/1728  M=0.                      :Manifold tube
 3    E=29000. U=0.25 W=0.49*1.016/1728  M=0.                      :Flange Plate
 4    E=29000. U=0.25 W=0.49*1.395/1728  M=0.49*1.395/1728/386.4   :Mating Plate
 5    E=29000. U=0.25 W=0.49*1.395/1728  M=0.49*1.395/1728/386.4   :Bottom Plate
C
C --- Shielding Plate 3" thick
C
C  ... OUTER RING
C
 1001  JQ=  1, 21,  2, 22  ETYPE=0  M=1  TH=3.0   LP=0
 1002  JQ=  2, 22,  3, 23  ETYPE=0  M=1  TH=3.0   LP=0
 1003  JQ=  3, 23, 45      ETYPE=0  M=1  TH=3.0   LP=0
 1004  JQ= 45, 23, 24      ETYPE=0  M=1  TH=3.0   LP=0
 1005  JQ= 45, 24,  4      ETYPE=0  M=1  TH=3.0   LP=0
 1006  JQ=  4, 24,  5, 25  ETYPE=0  M=1  TH=3.0   LP=0
 1007  JQ=  5, 25,  6, 26  ETYPE=0  M=1  TH=3.0   LP=0
 1008  JQ=  6, 26,  7, 27  ETYPE=0  M=1  TH=3.0   LP=0
 1009  JQ=  7, 27,  8, 28  ETYPE=0  M=1  TH=3.0   LP=0
 1010  JQ=  8, 28, 41      ETYPE=0  M=1  TH=3.0   LP=0
 1011  JQ= 41, 28, 29      ETYPE=0  M=1  TH=3.0   LP=0
 1012  JQ= 41, 29,  9      ETYPE=0  M=1  TH=3.0   LP=0
 1013  JQ=  9, 29, 10, 30  ETYPE=0  M=1  TH=3.0   LP=0
 1014  JQ= 10, 30, 11, 31  ETYPE=0  M=1  TH=3.0   LP=0
C
 1015  JQ= 11, 31, 12, 32  ETYPE=0  M=1  TH=3.0   LP=0
 1016  JQ= 12, 32, 13, 33  ETYPE=0  M=1  TH=3.0   LP=0
 1017  JQ= 13, 33, 81      ETYPE=0  M=1  TH=3.0   LP=0
 1018  JQ= 81, 33, 34      ETYPE=0  M=1  TH=3.0   LP=0
 1019  JQ= 81, 34, 14      ETYPE=0  M=1  TH=3.0   LP=0
 1020  JQ= 14, 34, 15, 35  ETYPE=0  M=1  TH=3.0   LP=0
 1021  JQ= 15, 35, 16, 36  ETYPE=0  M=1  TH=3.0   LP=0
 1022  JQ= 16, 36, 17, 37  ETYPE=0  M=1  TH=3.0   LP=0
 1023  JQ= 17, 37, 18, 38  ETYPE=0  M=1  TH=3.0   LP=0
 1024  JQ= 18, 38, 85      ETYPE=0  M=1  TH=3.0   LP=0
 1025  JQ= 85, 38, 39      ETYPE=0  M=1  TH=3.0   LP=0
 1026  JQ= 85, 39, 19      ETYPE=0  M=1  TH=3.0   LP=0
 1027  JQ= 19, 39, 20, 40  ETYPE=0  M=1  TH=3.0   LP=0
 1028  JQ= 20, 40,  1, 21  ETYPE=0  M=1  TH=3.0   LP=0
C
C
C ... CIRCULAR & SQUARE BOUNDARY PLATES
C
 1101  JQ= 65,  1, 55,  2  ETYPE=0  M=1  TH=3.0   LP=0
 1102  JQ= 55,  2, 45,  3  ETYPE=0  M=1  TH=3.0   LP=0
 1103  JQ= 44, 45,  5,  4  ETYPE=0  M=1  TH=3.0   LP=0
 1104  JQ= 43, 44,  6,  5  ETYPE=0  M=1  TH=3.0   LP=0
 1105  JQ= 42, 43,  7,  6  ETYPE=0  M=1  TH=3.0   LP=0
 1106  JQ= 41, 42,  8,  7  ETYPE=0  M=1  TH=3.0   LP=0
 1107  JQ= 10, 51,  9, 41  ETYPE=0  M=1  TH=3.0   LP=0
 1108  JQ= 11, 61, 10, 51  ETYPE=0  M=1  TH=3.0   LP=0
 1109  JQ= 12, 71, 11, 61  ETYPE=0  M=1  TH=3.0   LP=0
 1110  JQ= 13, 81, 12, 71  ETYPE=0  M=1  TH=3.0   LP=0
 1111  JQ= 14, 15, 81, 82  ETYPE=0  M=1  TH=3.0   LP=0
 1112  JQ= 15, 16, 82, 83  ETYPE=0  M=1  TH=3.0   LP=0
 1113  JQ= 16, 17, 83, 84  ETYPE=0  M=1  TH=3.0   LP=0
 1114  JQ= 17, 18, 84, 85  ETYPE=0  M=1  TH=3.0   LP=0
 1115  JQ= 85, 19, 75, 20  ETYPE=0  M=1  TH=3.0   LP=0
 1116  JQ= 75, 20, 65,  1  ETYPE=0  M=1  TH=3.0   LP=0
C
```





```
C  ...INNER SQUARE PLATES
C
 1201  JQ= 51, 52, 41, 42  ETYPE=0  M=1  TH=3.0   LP=0
 1202  JQ= 52, 53, 42, 43  ETYPE=0  M=1  TH=3.0   LP=0
 1203  JQ= 53, 54, 43, 44  ETYPE=0  M=1  TH=3.0   LP=0
 1204  JQ= 54, 55, 44, 45  ETYPE=0  M=1  TH=3.0   LP=0
 1205  JQ= 61, 62, 51, 52  ETYPE=0  M=1  TH=3.0   LP=0
 1206  JQ= 62, 63, 52, 53  ETYPE=0  M=1  TH=3.0   LP=0
 1207  JQ= 63, 64, 53, 54  ETYPE=0  M=1  TH=3.0   LP=0
 1208  JQ= 64, 65, 54, 55  ETYPE=0  M=1  TH=3.0   LP=0
 1209  JQ= 71, 72, 61, 62  ETYPE=0  M=1  TH=3.0   LP=0
 1210  JQ= 72, 73, 62, 63  ETYPE=0  M=1  TH=3.0   LP=0
 1211  JQ= 73, 74, 63, 64  ETYPE=0  M=1  TH=3.0   LP=0
 1212  JQ= 74, 75, 64, 65  ETYPE=0  M=1  TH=3.0   LP=0
 1213  JQ= 81, 82, 71, 72  ETYPE=0  M=1  TH=3.0   LP=0
 1214  JQ= 82, 83, 72, 73  ETYPE=0  M=1  TH=3.0   LP=0
 1215  JQ= 83, 84, 73, 74  ETYPE=0  M=1  TH=3.0   LP=0
 1216  JQ= 84, 85, 74, 75  ETYPE=0  M=1  TH=3.0   LP=0
C
C --- MANIFOLD TUBE 2" THICK, 4" TALL
C
 2001  JQ=121,122, 21, 22  ETYPE=0  M=2  TH=2.00   LP=0
 2002  JQ=122,123, 22, 23  ETYPE=0  M=2  TH=2.00   LP=0
 2003  JQ=123,124, 23, 24  ETYPE=0  M=2  TH=2.00   LP=0
 2004  JQ=124,125, 24, 25  ETYPE=0  M=2  TH=2.00   LP=0
 2005  JQ=125,126, 25, 26  ETYPE=0  M=2  TH=2.00   LP=0
 2006  JQ=126,127, 26, 27  ETYPE=0  M=2  TH=2.00   LP=0
 2007  JQ=127,128, 27, 28  ETYPE=0  M=2  TH=2.00   LP=0
 2008  JQ=128,129, 28, 29  ETYPE=0  M=2  TH=2.00   LP=0
 2009  JQ=129,130, 29, 30  ETYPE=0  M=2  TH=2.00   LP=0
 2010  JQ=130,131, 30, 31  ETYPE=0  M=2  TH=2.00   LP=0
 2011  JQ=131,132, 31, 32  ETYPE=0  M=2  TH=2.00   LP=0
 2012  JQ=132,133, 32, 33  ETYPE=0  M=2  TH=2.00   LP=0
 2013  JQ=133,134, 33, 34  ETYPE=0  M=2  TH=2.00   LP=0
 2014  JQ=134,135, 34, 35  ETYPE=0  M=2  TH=2.00   LP=0
 2015  JQ=135,136, 35, 36  ETYPE=0  M=2  TH=2.00   LP=0
 2016  JQ=136,137, 36, 37  ETYPE=0  M=2  TH=2.00   LP=0
 2017  JQ=137,138, 37, 38  ETYPE=0  M=2  TH=2.00   LP=0
 2018  JQ=138,139, 38, 39  ETYPE=0  M=2  TH=2.00   LP=0
 2019  JQ=139,140, 39, 40  ETYPE=0  M=2  TH=2.00   LP=0
 2020  JQ=140,121, 40, 21  ETYPE=0  M=2  TH=2.00   LP=0
C
C --- Flange plate  3/4" thick
C
C  ... INNER RING
C
 3001  JQ=101,121,102,122  ETYPE=0  M=3  TH=0.75   LP=0
 3002  JQ=102,122,103,123  ETYPE=0  M=3  TH=0.75   LP=0
 3003  JQ=103,123,145      ETYPE=0  M=3  TH=0.75   LP=0
 3004  JQ=145,123,124      ETYPE=0  M=3  TH=0.75   LP=0
 3005  JQ=145,124,104      ETYPE=0  M=3  TH=0.75   LP=0
 3006  JQ=104,124,105,125  ETYPE=0  M=3  TH=0.75   LP=0
 3007  JQ=105,125,106,126  ETYPE=0  M=3  TH=0.75   LP=0
 3008  JQ=106,126,107,127  ETYPE=0  M=3  TH=0.75   LP=0
 3009  JQ=107,127,108,128  ETYPE=0  M=3  TH=0.75   LP=0
 3010  JQ=108,128,141      ETYPE=0  M=3  TH=0.75   LP=0
 3011  JQ=141,128,129      ETYPE=0  M=3  TH=0.75   LP=0
 3012  JQ=141,129,109      ETYPE=0  M=3  TH=0.75   LP=0
 3013  JQ=109,129,110,130  ETYPE=0  M=3  TH=0.75   LP=0
 3014  JQ=110,130,111,131  ETYPE=0  M=3  TH=0.75   LP=0
C
 3015  JQ=111,131,112,132  ETYPE=0  M=3  TH=0.75   LP=0
 3016  JQ=112,132,113,133  ETYPE=0  M=3  TH=0.75   LP=0
 3017  JQ=113,133,181      ETYPE=0  M=3  TH=0.75   LP=0
 3018  JQ=181,133,134      ETYPE=0  M=3  TH=0.75   LP=0
 3019  JQ=181,134,114      ETYPE=0  M=3  TH=0.75   LP=0
```

TH = 1.00
Thickness of Manifold
Tube should be 1
instead of 2"



+27

```
3020  JQ=114,134,115,135  ETYPE=0  M=3  TH=0.75  LP=0
3021  JQ=115,135,116,136  ETYPE=0  M=3  TH=0.75  LP=0
3022  JQ=116,136,117,137  ETYPE=0  M=3  TH=0.75  LP=0
3023  JQ=117,137,118,138  ETYPE=0  M=3  TH=0.75  LP=0
3024  JQ=118,138,185      ETYPE=0  M=3  TH=0.75  LP=0
3025  JQ=185,138,139      ETYPE=0  M=3  TH=0.75  LP=0
3026  JQ=185,139,119      ETYPE=0  M=3  TH=0.75  LP=0
3027  JQ=119,139,120,140  ETYPE=0  M=3  TH=0.75  LP=0
3028  JQ=120,140,101,121  ETYPE=0  M=3  TH=0.75  LP=0
C
C ... CIRCULAR & SQUARE BOUNDARY PLATES
C
3101  JQ=165,101,155,102  ETYPE=0  M=3  TH=0.75  LP=0
3102  JQ=155,102,145,103  ETYPE=0  M=3  TH=0.75  LP=0
3103  JQ=144,145,105,104  ETYPE=0  M=3  TH=0.75  LP=0
3104  JQ=143,144,106,105  ETYPE=0  M=3  TH=0.75  LP=0
3105  JQ=142,143,107,106  ETYPE=0  M=3  TH=0.75  LP=0
3106  JQ=141,142,108,107  ETYPE=0  M=3  TH=0.75  LP=0
3107  JQ=110,151,109,141  ETYPE=0  M=3  TH=0.75  LP=0
3108  JQ=111,161,110,151  ETYPE=0  M=3  TH=0.75  LP=0
3109  JQ=112,171,111,161  ETYPE=0  M=3  TH=0.75  LP=0
3110  JQ=113,181,112,171  ETYPE=0  M=3  TH=0.75  LP=0
3111  JQ=114,115,181,182  ETYPE=0  M=3  TH=0.75  LP=0
3112  JQ=115,116,182,183  ETYPE=0  M=3  TH=0.75  LP=0
3113  JQ=116,117,183,184  ETYPE=0  M=3  TH=0.75  LP=0
3114  JQ=117,118,184,185  ETYPE=0  M=3  TH=0.75  LP=0
3115  JQ=185,119,175,120  ETYPE=0  M=3  TH=0.75  LP=0
3116  JQ=175,120,165,101  ETYPE=0  M=3  TH=0.75  LP=0
C
C  ...INNER SQUARE PLATES
C
3201  JQ=151,152,141,142  ETYPE=0  M=3  TH=0.75  LP=0
3202  JQ=152,153,142,143  ETYPE=0  M=3  TH=0.75  LP=0
3203  JQ=153,154,143,144  ETYPE=0  M=3  TH=0.75  LP=0
3204  JQ=154,155,144,145  ETYPE=0  M=3  TH=0.75  LP=0
3205  JQ=161,162,151,152  ETYPE=0  M=3  TH=0.75  LP=0
3206  JQ=162,163,152,153  ETYPE=0  M=3  TH=0.75  LP=0
3207  JQ=163,164,153,154  ETYPE=0  M=3  TH=0.75  LP=0
3208  JQ=164,165,154,155  ETYPE=0  M=3  TH=0.75  LP=0
3209  JQ=171,172,161,162  ETYPE=0  M=3  TH=0.75  LP=0
3210  JQ=172,173,162,163  ETYPE=0  M=3  TH=0.75  LP=0
3211  JQ=173,174,163,164  ETYPE=0  M=3  TH=0.75  LP=0
3212  JQ=174,175,164,165  ETYPE=0  M=3  TH=0.75  LP=0
3213  JQ=181,182,171,172  ETYPE=0  M=3  TH=0.75  LP=0
3214  JQ=182,183,172,173  ETYPE=0  M=3  TH=0.75  LP=0
3215  JQ=183,184,173,174  ETYPE=0  M=3  TH=0.75  LP=0
3216  JQ=184,185,174,175  ETYPE=0  M=3  TH=0.75  LP=0
C
C ... 2ND TO THE OUTER RING  (BOLT LOCATIONS)
C
3301  JQ=121,201,122,202  ETYPE=0  M=3  TH=0.75  LP=0
3302  JQ=122,202,123,203  ETYPE=0  M=3  TH=0.75  LP=0
3303  JQ=123,203,124,204  ETYPE=0  M=3  TH=0.75  LP=0
3304  JQ=124,204,125,205  ETYPE=0  M=3  TH=0.75  LP=0
3305  JQ=125,205,126,206  ETYPE=0  M=3  TH=0.75  LP=0
3306  JQ=126,206,127,207  ETYPE=0  M=3  TH=0.75  LP=0
3307  JQ=127,207,128,208  ETYPE=0  M=3  TH=0.75  LP=0
3308  JQ=128,208,129,209  ETYPE=0  M=3  TH=0.75  LP=0
3309  JQ=129,209,130,210  ETYPE=0  M=3  TH=0.75  LP=0
3310  JQ=130,210,131,211  ETYPE=0  M=3  TH=0.75  LP=0
C
3311  JQ=131,211,132,212  ETYPE=0  M=3  TH=0.75  LP=0
3312  JQ=132,212,133,213  ETYPE=0  M=3  TH=0.75  LP=0
3313  JQ=133,213,134,214  ETYPE=0  M=3  TH=0.75  LP=0
3314  JQ=134,214,135,215  ETYPE=0  M=3  TH=0.75  LP=0
3315  JQ=135,215,136,216  ETYPE=0  M=3  TH=0.75  LP=0
```



```
3316  JQ=136,216,137,217  ETYPE=0  M=3  TH=0.75  LP=0
3317  JQ=137,217,138,218  ETYPE=0  M=3  TH=0.75  LP=0
3318  JQ=138,218,139,219  ETYPE=0  M=3  TH=0.75  LP=0
3319  JQ=139,219,140,220  ETYPE=0  M=3  TH=0.75  LP=0
3320  JQ=140,220,121,201  ETYPE=0  M=3  TH=0.75  LP=0
C
C ... OUTER RING
C
3401  JQ=201,221,202,222  ETYPE=0  M=3  TH=0.75  LP=0
3402  JQ=202,222,203,223  ETYPE=0  M=3  TH=0.75  LP=0
3403  JQ=203,223,204,224  ETYPE=0  M=3  TH=0.75  LP=0
3404  JQ=204,224,205,225  ETYPE=0  M=3  TH=0.75  LP=0
3405  JQ=205,225,206,226  ETYPE=0  M=3  TH=0.75  LP=0
3406  JQ=206,226,207,227  ETYPE=0  M=3  TH=0.75  LP=0
3407  JQ=207,227,208,228  ETYPE=0  M=3  TH=0.75  LP=0
3408  JQ=208,228,209,229  ETYPE=0  M=3  TH=0.75  LP=0
3409  JQ=209,229,210,230  ETYPE=0  M=3  TH=0.75  LP=0
3410  JQ=210,230,211,231  ETYPE=0  M=3  TH=0.75  LP=0
C
3411  JQ=211,231,212,232  ETYPE=0  M=3  TH=0.75  LP=0
3412  JQ=212,232,213,233  ETYPE=0  M=3  TH=0.75  LP=0
3413  JQ=213,233,214,234  ETYPE=0  M=3  TH=0.75  LP=0
3414  JQ=214,234,215,235  ETYPE=0  M=3  TH=0.75  LP=0
3415  JQ=215,235,216,236  ETYPE=0  M=3  TH=0.75  LP=0
3416  JQ=216,236,217,237  ETYPE=0  M=3  TH=0.75  LP=0
3417  JQ=217,237,218,238  ETYPE=0  M=3  TH=0.75  LP=0
3418  JQ=218,238,219,239  ETYPE=0  M=3  TH=0.75  LP=0
3419  JQ=219,239,220,240  ETYPE=0  M=3  TH=0.75  LP=0
3420  JQ=220,240,201,221  ETYPE=0  M=3  TH=0.75  LP=0
C
C --- Mating Plate Upper/Lower Mast,  1/2" thick
C
4001  JQ=1101,1104,1102,1103  ETYPE=0  M=4  TH=0.5  LP=0
C
C --- Bottom Plate, 1/2" thick
C
4002  JQ=1801,1804,1802,1803  ETYPE=0  M=5  TH=0.5  LP=0

C ***********************************************************************
LOADS
C
C --- Dead Load of Camera
C
 2001  L=1  F=0,0,-.128
C
C --- Masses of Shield plate applied at center of 4 SS pipes
C
  41  L=2  F=.00969,.00969,.00969
  45  L=2  F=.00969,.00969,.00969
  81  L=2  F=.00969,.00969,.00969
  85  L=2  F=.00969,.00969,.00969
C
C --- Masses of Manifold Tube applied at Nodes 121 thru 140 equally
C
 121  L=2  F=.00261,.00261,.00261
 122  L=2  F=.00261,.00261,.00261
 123  L=2  F=.00261,.00261,.00261
 124  L=2  F=.00261,.00261,.00261
 125  L=2  F=.00261,.00261,.00261
 126  L=2  F=.00261,.00261,.00261
 127  L=2  F=.00261,.00261,.00261
 128  L=2  F=.00261,.00261,.00261
 129  L=2  F=.00261,.00261,.00261
 130  L=2  F=.00261,.00261,.00261
 131  L=2  F=.00261,.00261,.00261
 132  L=2  F=.00261,.00261,.00261
```

```
  133  L=2  F=.00261,.00261,.00261
  134  L=2  F=.00261,.00261,.00261
  135  L=2  F=.00261,.00261,.00261
  136  L=2  F=.00261,.00261,.00261
  137  L=2  F=.00261,.00261,.00261
  138  L=2  F=.00261,.00261,.00261
  139  L=2  F=.00261,.00261,.00261
  140  L=2  F=.00261,.00261,.00261
C
C --- Masses of Flange plate applied at center of the 4 SS pipes
C
  141  L=2  F=.0038,.0038,.0038
  145  L=2  F=.0038,.0038,.0038
  181  L=2  F=.0038,.0038,.0038
  185  L=2  F=.0038,.0038,.0038

C ***************************************************************************
MASSES
2001  M= .128/386.4,.128/386.4,.128/386.4

C ***************************************************************************
SPEC
   S=386.4   A=0.0   D=0.02
C
C  Non-reactor Safety Class 2  2% damped Design Spectrum from Figure 3 and
C  Table 2, scaled by 0.6, SDC 4.1 Revision 12, Design Loads for Facilities
C
C  Convservatively, Sa is applied 100% in all 3 directions (2 hori., 1 vert)
C
C  Per(sec)   SAx(g)   SAy(g)   SAz(g)
    0.01000  0.12000  0.12000  0.12000
    0.01508  0.12000  0.12000  0.12000
    0.02015  0.12000  0.12000  0.12000
    0.02523  0.12000  0.12000  0.12000
    0.03030  0.12000  0.12000  0.12000
    0.03523  0.13362  0.13362  0.13362
    0.04015  0.14671  0.14671  0.14671
    0.04508  0.15935  0.15935  0.15935
    0.05000  0.17160  0.17160  0.17160
    0.05833  0.19158  0.19158  0.19158
    0.06667  0.21076  0.21076  0.21076
    0.07500  0.22927  0.22927  0.22927
    0.08333  0.24720  0.24720  0.24720
    0.09375  0.26884  0.26884  0.26884
    0.10417  0.28980  0.28980  0.28980
    0.11458  0.31016  0.31016  0.31016
    0.12500  0.33000  0.33000  0.33000
    0.23826  0.33000  0.33000  0.33000
    0.35152  0.33000  0.33000  0.33000
    0.46478  0.33000  0.33000  0.33000
    0.57803  0.33000  0.33000  0.33000
    0.66080  0.28898  0.28898  0.28898
    0.74356  0.25706  0.25706  0.25706
    0.82633  0.23151  0.23151  0.23151
    0.90909  0.21060  0.21060  0.21060
    1.09848  0.17444  0.17444  0.17444
    1.28788  0.14890  0.14890  0.14890
    1.47727  0.12990  0.12990  0.12990
    1.66667  0.11520  0.11520  0.11520
    1.87500  0.10263  0.10263  0.10263
    2.08333  0.09256  0.09256  0.09256
    2.29167  0.08430  0.08430  0.08430
    2.50000  0.07740  0.07740  0.07740
    2.83654  0.06825  0.06825  0.06825
    3.17308  0.06104  0.06104  0.06104
    3.50962  0.05521  0.05521  0.05521
```



```
    3.84615  0.05040  0.05040  0.05040
    4.44712  0.03741  0.03741  0.03741
    5.04808  0.02884  0.02884  0.02884
    5.64904  0.02289  0.02289  0.02289
    6.25000  0.01860  0.01860  0.01860
    7.18750  0.01403  0.01403  0.01403
    8.12500  0.01095  0.01095  0.01095
    9.06250  0.00878  0.00878  0.00878
   10.00000  0.00720  0.00720  0.00720

C ***************************************************************************
COMBO
1  C=1              : DL
2  C=0,1    D= 1.0  : Masses of Plates + Spectra
3  C=1,1    D= 1.0  : DL + (Masses of Plates) + Spectra
4  C=1,-1   D=-1.0  : DL - (Masses of Plates) - Spectra
```





129

```
06/01/1994  15:46        Filename: CM-B-01                          Page   1

WHC/MPF CAMERA ASSEMBLY MODEL  JOB#: 66458-01  RUN: CM-B-01
C ***************************************************************************
C*
C   Units = Kips, in   fy=60 ksi   Steel density=490 pcf = 0.0002836 kci
C ***************************************************************************
C
C   Update Log
C
C   Date      By      Version       Description
C   5/23/94   PKL     CM-A-01       Original SAP90 Model
C   5/26/94   PKL     CM-A-02       Adjustment of total wt = 1,227 lbs
C   5/31/94   PKL     CM-A-03       Add one more load case, 1.0DL-1.0EQ
C   6/01/94   PKL     CM-B-01       Merge MPF-03 riser model w/ camera model
C
C ***************************************************************************
C
C   Computer Models Naming Nomenclature
C   SAP90 files are named using the following terminology:
C        CM-A-01.ext   (*.ext  as described by SAP90 Manual)
C        1234567
C
C   where:    Character      Description
C               1-2          CM= Camera Assembly Model
C               4            A = Model A, B, C.. etc
C               5            Model A, B, C... etc
C               6-7          Run Number
C
C ***************************************************************************
C   Node numbering scheme:
C   ======================
C
C     1-  99   3" thick Shielding Plate
C   100- 299   3/4" thick Flange Plate
C   300- 399   12.000" below bottom of Flange Plate, upper mast
C   400- 499   22.107" below bottom of Flange Plate, upper mast
C   500- 599   36.000" below bottom of Flange Plate, upper mast
C   600- 699   46.107" below bottom of Flange Plate, upper mast
C   700- 799   60.000" below bottom of Flange Plate, upper mast
C   800- 899   70.107" below bottom of Flange Plate, upper mast
C   900- 999   84.000" below bottom of Flange Plate, upper mast
C  1000-1099   94.107" below bottom of Flange Plate, upper mast
C  1100-1199  108.000" below bottom of Flange Plate, bottom of 1/2" Mating PL.
C  1200-1299   11.500" below top of 1/2" Mating Plate, lower mast
C  1300-1399   21.107" below top of 1/2" Mating Plate, lower mast
C  1400-1499   32.600" below top of 1/2" Mating Plate, lower mast
C  1500-1599   49.600" below top of 1/2" Mating Plate, lower mast
C  1600-1699   66.600" below top of 1/2" Mating Plate, lower mast
C  1700-1799   84.100" below top of 1/2" Mating Plate, lower mast
C  1800-1899   86.413" below top of 1/2" Mating Plate, lower mast
C  2000        Camera Roll Assembly
C  3000-3999   Nodes for the Riser Model, MPF-03
C
C   Element numbering scheme:
C   =========================
C
C   Beam Elements:   100 - 199   Weightless stiff beams from bolts to master
C                    200 - 299   Steel Pipes
C                    300 - 399   Short stiff beams betwen pipes and X-braces
C                    400 - 499   Cross Braces
C                    500 - 599   3/8" Light Support
C                    600 - 699   Temp. beams connects to camera
C                   1000 -1999   Beams for the Riser Model, MPF-03
C
C   Shell Elements: 1000 -1999   Shielding plates 3" thick
C                   2000 -2999   Manifold tube  2" thick, 4" high
C                   3000 -3999   Flange Plate  3/4" thick
```

```
06/01/1994  15:46        Filename: CM-B-01                          Page   2

C                   4000 -4999   Mating Plates, bottom plate
C
C ***************************************************************************
SYSTEM
L=4 V=10                                                  : 4 Load cases
C ***************************************************************************
C
C --- 1. Shielding Plate 3" thick (Dwg No. 42-2)
C
JOINTS
      1   X=   7.778    Y=   0.000    Z=   5.875
      2   X=   7.397    Y=   2.404    Z=   5.875
      3   X=   6.293    Y=   4.572    Z=   5.875
      4   X=   4.572    Y=   6.293    Z=   5.875
      5   X=   2.404    Y=   7.397    Z=   5.875
      6   X=   0.000    Y=   7.778    Z=   5.875
      7   X=  -2.404    Y=   7.397    Z=   5.875
      8   X=  -4.572    Y=   6.293    Z=   5.875
      9   X=  -6.293    Y=   4.572    Z=   5.875
     10   X=  -7.397    Y=   2.404    Z=   5.875
     11   X=  -7.778    Y=   0.000    Z=   5.875
     12   X=  -7.397    Y=  -2.404    Z=   5.875
     13   X=  -6.293    Y=  -4.572    Z=   5.875
     14   X=  -4.572    Y=  -6.293    Z=   5.875
     15   X=  -2.404    Y=  -7.397    Z=   5.875
     16   X=   0.000    Y=  -7.778    Z=   5.875
     17   X=   2.404    Y=  -7.397    Z=   5.875
     18   X=   4.572    Y=  -6.293    Z=   5.875
     19   X=   6.293    Y=  -4.572    Z=   5.875
     20   X=   7.397    Y=  -2.404    Z=   5.875
C
     21   X=  10.500    Y=   0.000    Z=   5.875
     22   X=   9.986    Y=   3.245    Z=   5.875
     23   X=   8.495    Y=   6.172    Z=   5.875
     24   X=   6.172    Y=   8.495    Z=   5.875
     25   X=   3.245    Y=   9.986    Z=   5.875
     26   X=   0.000    Y=  10.500    Z=   5.875
     27   X=  -3.245    Y=   9.986    Z=   5.875
     28   X=  -6.172    Y=   8.495    Z=   5.875
     29   X=  -8.495    Y=   6.172    Z=   5.875
     30   X=  -9.986    Y=   3.245    Z=   5.875
     31   X= -10.500    Y=   0.000    Z=   5.875
     32   X=  -9.986    Y=  -3.245    Z=   5.875
     33   X=  -8.495    Y=  -6.172    Z=   5.875
     34   X=  -6.172    Y=  -8.495    Z=   5.875
     35   X=  -3.245    Y=  -9.986    Z=   5.875
     36   X=   0.000    Y= -10.500    Z=   5.875
     37   X=   3.245    Y=  -9.986    Z=   5.875
     38   X=   6.172    Y=  -8.495    Z=   5.875
     39   X=   8.495    Y=  -6.172    Z=   5.875
     40   X=   9.986    Y=  -3.245    Z=   5.875
C
     41   X=  -5.500    Y=   5.500    Z=   5.875
     42   X=  -2.404    Y=   5.500    Z=   5.875
     43   X=   0.000    Y=   5.500    Z=   5.875
     44   X=   2.404    Y=   5.500    Z=   5.875
     45   X=   5.500    Y=   5.500    Z=   5.875
C
     51   X=  -5.500    Y=   2.404    Z=   5.875
     52   X=  -2.404    Y=   2.404    Z=   5.875
     53   X=   0.000    Y=   2.404    Z=   5.875
     54   X=   2.404    Y=   2.404    Z=   5.875
     55   X=   5.500    Y=   2.404    Z=   5.875
C
     61   X=  -5.500    Y=   0.000    Z=   5.875
     62   X=  -2.404    Y=   0.000    Z=   5.875
```

SAP90 MODEL B

2 of 4

```
      63  X=    0.000    Y=    0.000    Z=    5.875
      64  X=    2.404    Y=    0.000    Z=    5.875
      65  X=    5.500    Y=    0.000    Z=    5.875
C
      71  X=   -5.500    Y=   -2.404    Z=    5.875
      72  X=   -2.404    Y=   -2.404    Z=    5.875
      73  X=    0.000    Y=   -2.404    Z=    5.875
      74  X=    2.404    Y=   -2.404    Z=    5.875
      75  X=    5.500    Y=   -2.404    Z=    5.875
C
      81  X=   -5.500    Y=   -5.500    Z=    5.875
      82  X=   -2.404    Y=   -5.500    Z=    5.875
      83  X=    0.000    Y=   -5.500    Z=    5.875
      84  X=    2.404    Y=   -5.500    Z=    5.875
      85  X=    5.500    Y=   -5.500    Z=    5.875
C
C --- 2.  Flange Plate 3/4" thick  (Dwg No. 42-7)
C
C
     101  X=    7.778    Y=    0.000    Z=    0.000
     102  X=    7.397    Y=    2.404    Z=    0.000
     103  X=    6.293    Y=    4.572    Z=    0.000
     104  X=    4.572    Y=    6.293    Z=    0.000
     105  X=    2.404    Y=    7.397    Z=    0.000
     106  X=    0.000    Y=    7.778    Z=    0.000
     107  X=   -2.404    Y=    7.397    Z=    0.000
     108  X=   -4.572    Y=    6.293    Z=    0.000
     109  X=   -6.293    Y=    4.572    Z=    0.000
     110  X=   -7.397    Y=    2.404    Z=    0.000
     111  X=   -7.778    Y=    0.000    Z=    0.000
     112  X=   -7.397    Y=   -2.404    Z=    0.000
     113  X=   -6.293    Y=   -4.572    Z=    0.000
     114  X=   -4.572    Y=   -6.293    Z=    0.000
     115  X=   -2.404    Y=   -7.397    Z=    0.000
     116  X=    0.000    Y=   -7.778    Z=    0.000
     117  X=    2.404    Y=   -7.397    Z=    0.000
     118  X=    4.572    Y=   -6.293    Z=    0.000
     119  X=    6.293    Y=   -4.572    Z=    0.000
     120  X=    7.397    Y=   -2.404    Z=    0.000
     121  X=   10.500    Y=    0.000    Z=    0.000
     122  X=    9.986    Y=    3.245    Z=    0.000
     123  X=    8.495    Y=    6.172    Z=    0.000
     124  X=    6.172    Y=    8.495    Z=    0.000
     125  X=    3.245    Y=    9.986    Z=    0.000
     126  X=    0.000    Y=   10.500    Z=    0.000
     127  X=   -3.245    Y=    9.986    Z=    0.000
     128  X=   -6.172    Y=    8.495    Z=    0.000
     129  X=   -8.495    Y=    6.172    Z=    0.000
     130  X=   -9.986    Y=    3.245    Z=    0.000
     131  X=  -10.500    Y=    0.000    Z=    0.000
     132  X=   -9.986    Y=   -3.245    Z=    0.000
     133  X=   -8.495    Y=   -6.172    Z=    0.000
     134  X=   -6.172    Y=   -8.495    Z=    0.000
     135  X=   -3.245    Y=   -9.986    Z=    0.000
     136  X=    0.000    Y=  -10.500    Z=    0.000
     137  X=    3.245    Y=   -9.986    Z=    0.000
     138  X=    6.172    Y=   -8.495    Z=    0.000
     139  X=    8.495    Y=   -6.172    Z=    0.000
     140  X=    9.986    Y=   -3.245    Z=    0.000
C
     141  X=   -5.500    Y=    5.500    Z=    0.000
     142  X=   -2.404    Y=    5.500    Z=    0.000
     143  X=    0.000    Y=    5.500    Z=    0.000
     144  X=    2.404    Y=    5.500    Z=    0.000
     145  X=    5.500    Y=    5.500    Z=    0.000
C
```



```
     151  X=   -5.500    Y=    2.404    Z=    0.000
     152  X=   -2.404    Y=    2.404    Z=    0.000
     153  X=    0.000    Y=    2.404    Z=    0.000
     154  X=    2.404    Y=    2.404    Z=    0.000
     155  X=    5.500    Y=    2.404    Z=    0.000
C
     161  X=   -5.500    Y=    0.000    Z=    0.000
     162  X=   -2.404    Y=    0.000    Z=    0.000
     163  X=    0.000    Y=    0.000    Z=    0.000
     164  X=    2.404    Y=    0.000    Z=    0.000
     165  X=    5.500    Y=    0.000    Z=    0.000
C
     171  X=   -5.500    Y=   -2.404    Z=    0.000
     172  X=   -2.404    Y=   -2.404    Z=    0.000
     173  X=    0.000    Y=   -2.404    Z=    0.000
     174  X=    2.404    Y=   -2.404    Z=    0.000
     175  X=    5.500    Y=   -2.404    Z=    0.000
C
     181  X=   -5.500    Y=   -5.500    Z=    0.000
     182  X=   -2.404    Y=   -5.500    Z=    0.000
     183  X=    0.000    Y=   -5.500    Z=    0.000
     184  X=    2.404    Y=   -5.500    Z=    0.000
     185  X=    5.500    Y=   -5.500    Z=    0.000
C
     201  X=   12.500    Y=    0.000    Z=    0.000
     202  X=   11.888    Y=    3.863    Z=    0.000
     203  X=   10.113    Y=    7.347    Z=    0.000
     204  X=    7.347    Y=   10.113    Z=    0.000
     205  X=    3.863    Y=   11.888    Z=    0.000
     206  X=    0.000    Y=   12.500    Z=    0.000
     207  X=   -3.863    Y=   11.888    Z=    0.000
     208  X=   -7.347    Y=   10.113    Z=    0.000
     209  X=  -10.113    Y=    7.347    Z=    0.000
     210  X=  -11.888    Y=    3.863    Z=    0.000
     211  X=  -12.500    Y=    0.000    Z=    0.000
     212  X=  -11.888    Y=   -3.863    Z=    0.000
     213  X=  -10.113    Y=   -7.347    Z=    0.000
     214  X=   -7.347    Y=  -10.113    Z=    0.000
     215  X=   -3.863    Y=  -11.888    Z=    0.000
     216  X=    0.000    Y=  -12.500    Z=    0.000
     217  X=    3.863    Y=  -11.888    Z=    0.000
     218  X=    7.347    Y=  -10.113    Z=    0.000
     219  X=   10.113    Y=   -7.347    Z=    0.000
     220  X=   11.888    Y=   -3.863    Z=    0.000
C
     221  X=   13.750    Y=    0.000    Z=    0.000
     222  X=   13.077    Y=    4.249    Z=    0.000
     223  X=   11.124    Y=    8.082    Z=    0.000
     224  X=    8.082    Y=   11.124    Z=    0.000
     225  X=    4.249    Y=   13.077    Z=    0.000
     226  X=    0.000    Y=   13.750    Z=    0.000
     227  X=   -4.249    Y=   13.077    Z=    0.000
     228  X=   -8.082    Y=   11.124    Z=    0.000
     229  X=  -11.124    Y=    8.082    Z=    0.000
     230  X=  -13.077    Y=    4.249    Z=    0.000
     231  X=  -13.750    Y=    0.000    Z=    0.000
     232  X=  -13.077    Y=   -4.249    Z=    0.000
     233  X=  -11.124    Y=   -8.082    Z=    0.000
     234  X=   -8.082    Y=  -11.124    Z=    0.000
     235  X=   -4.249    Y=  -13.077    Z=    0.000
     236  X=    0.000    Y=  -13.750    Z=    0.000
     237  X=    4.249    Y=  -13.077    Z=    0.000
     238  X=    8.082    Y=  -11.124    Z=    0.000
     239  X=   11.124    Y=   -8.082    Z=    0.000
     240  X=   13.077    Y=   -4.249    Z=    0.000
C
```

```
C     Node 163 connect to the plate;
C     Node 299 is the MASTER node w/ restraints in 6 DOF and connects to beams.
C
      299   X=    0.000       Y=    0.000       Z=    0.000
C
C --- 12.000" below bottom of Flange Plate, upper mast
C
      301   X=   -5.500       Y=   -5.500       Z=  -12.875
      302   X=   -5.500       Y=    5.500       Z=  -12.875
      303   X=    5.500       Y=    5.500       Z=  -12.875
      304   X=    5.500       Y=   -5.500       Z=  -12.875
C
      311   X=-5.5-.736       Y=-5.5+.587       Z=  -12.875
      312   X=-5.5+.587       Y= 5.5+.736       Z=  -12.875
      313   X= 5.5+.736       Y= 5.5-.587       Z=  -12.875
      314   X= 5.5-.587       Y=-5.5-.736       Z=  -12.875
C
C --- 22.107" below bottom of Flange Plate, upper mast
C
      401   X=   -5.500       Y=   -5.500       Z=  -22.982
      402   X=   -5.500       Y=    5.500       Z=  -22.982
      403   X=    5.500       Y=    5.500       Z=  -22.982
      404   X=    5.500       Y=   -5.500       Z=  -22.982
C
      411   X=-5.5+.587       Y=-5.5-.736       Z=  -22.982
      412   X=-5.5-.736       Y= 5.5-.587       Z=  -22.982
      413   X= 5.5-.587       Y= 5.5+.736       Z=  -22.982
      414   X= 5.5+.736       Y=-5.5+.587       Z=  -22.982
C
C --- 36.000" below bottom of Flange Plate, upper mast
C
      501   X=   -5.500       Y=   -5.500       Z=  -36.875
      502   X=   -5.500       Y=    5.500       Z=  -36.875
      503   X=    5.500       Y=    5.500       Z=  -36.875
      504   X=    5.500       Y=   -5.500       Z=  -36.875
C
      511   X=-5.5-.736       Y=-5.5+.587       Z=  -36.875
      512   X=-5.5+.587       Y= 5.5+.736       Z=  -36.875
      513   X= 5.5+.736       Y= 5.5-.587       Z=  -36.875
      514   X= 5.5-.587       Y=-5.5-.736       Z=  -36.875
C
C --- 46.107" below bottom of Flange Plate, upper mast
C
      601   X=   -5.500       Y=   -5.500       Z=  -46.982
      602   X=   -5.500       Y=    5.500       Z=  -46.982
      603   X=    5.500       Y=    5.500       Z=  -46.982
      604   X=    5.500       Y=   -5.500       Z=  -46.982
C
      611   X=-5.5+.587       Y=-5.5-.736       Z=  -46.982
      612   X=-5.5-.736       Y= 5.5-.587       Z=  -46.982
      613   X= 5.5-.587       Y= 5.5+.736       Z=  -46.982
      614   X= 5.5+.736       Y=-5.5+.587       Z=  -46.982
C
C --- 60.000" below bottom of Flange Plate, upper mast
C
      701   X=   -5.500       Y=   -5.500       Z=  -60.875
      702   X=   -5.500       Y=    5.500       Z=  -60.875
      703   X=    5.500       Y=    5.500       Z=  -60.875
      704   X=    5.500       Y=   -5.500       Z=  -60.875
C
      711   X=-5.5-.736       Y=-5.5+.587       Z=  -60.875
      712   X=-5.5+.587       Y= 5.5+.736       Z=  -60.875
      713   X= 5.5+.736       Y= 5.5-.587       Z=  -60.875
      714   X= 5.5-.587       Y=-5.5-.736       Z=  -60.875
C
C --- 70.107" below bottom of Flange Plate, upper mast
```



```
C
      801   X=   -5.500       Y=   -5.500       Z=  -70.982
      802   X=   -5.500       Y=    5.500       Z=  -70.982
      803   X=    5.500       Y=    5.500       Z=  -70.982
      804   X=    5.500       Y=   -5.500       Z=  -70.982
C
      811   X=-5.5+.587       Y=-5.5-.736       Z=  -70.982
      812   X=-5.5-.736       Y= 5.5-.587       Z=  -70.982
      813   X= 5.5-.587       Y= 5.5+.736       Z=  -70.982
      814   X= 5.5+.736       Y=-5.5+.587       Z=  -70.982
C
C --- 84.000" below bottom of Flange Plate, upper mast
C
      901   X=   -5.500       Y=   -5.500       Z=  -84.875
      902   X=   -5.500       Y=    5.500       Z=  -84.875
      903   X=    5.500       Y=    5.500       Z=  -84.875
      904   X=    5.500       Y=   -5.500       Z=  -84.875
C
      911   X=-5.5-.736       Y=-5.5+.587       Z=  -84.875
      912   X=-5.5+.587       Y= 5.5+.736       Z=  -84.875
      913   X= 5.5+.736       Y= 5.5-.587       Z=  -84.875
      914   X= 5.5-.587       Y=-5.5-.736       Z=  -84.875
C
C --- 94.107" below bottom of Flange Plate, upper mast
C
     1001   X=   -5.500       Y=   -5.500       Z=  -94.982
     1002   X=   -5.500       Y=    5.500       Z=  -94.982
     1003   X=    5.500       Y=    5.500       Z=  -94.982
     1004   X=    5.500       Y=   -5.500       Z=  -94.982
C
     1011   X=-5.5+.587       Y=-5.5-.736       Z=  -94.982
     1012   X=-5.5-.736       Y= 5.5-.587       Z=  -94.982
     1013   X= 5.5-.587       Y= 5.5+.736       Z=  -94.982
     1014   X= 5.5+.736       Y=-5.5+.587       Z=  -94.982
C
C --- Lower Mast Assembly  1/2" Mating Plate
C
     1101   X=   -5.500       Y=   -5.500       Z= -108.125
     1102   X=   -5.500       Y=    5.500       Z= -108.125
     1103   X=    5.500       Y=    5.500       Z= -108.125
     1104   X=    5.500       Y=   -5.500       Z= -108.125
C
C --- 11" below Mating Plate, Lower Mast
C
     1201   X=   -5.500       Y=   -5.500       Z= -119.375
     1202   X=   -5.500       Y=    5.500       Z= -119.375
     1203   X=    5.500       Y=    5.500       Z= -119.375
     1204   X=    5.500       Y=   -5.500       Z= -119.375
C
     1211   X=-5.5-.736       Y=-5.5+.587       Z= -119.375
     1212   X=-5.5+.587       Y= 5.5+.736       Z= -119.375
     1213   X= 5.5+.736       Y= 5.5-.587       Z= -119.375
     1214   X= 5.5-.587       Y=-5.5-.736       Z= -119.375
C
C --- 21.107" below Mating Plate, Lower Mast
C
     1301   X=   -5.500       Y=   -5.500       Z= -129.482
     1302   X=   -5.500       Y=    5.500       Z= -129.482
     1303   X=    5.500       Y=    5.500       Z= -129.482
     1304   X=    5.500       Y=   -5.500       Z= -129.482
C
     1311   X=-5.5+.587       Y=-5.5-.736       Z= -129.482
     1312   X=-5.5-.736       Y= 5.5-.587       Z= -129.482
     1313   X= 5.5-.587       Y= 5.5+.736       Z= -129.482
     1314   X= 5.5+.736       Y=-5.5+.587       Z= -129.482
C
```



4 2 12

```
C --- Section B  32" below Mating Plate, Lower Mast
C
    1401   X=   -5.500      Y=   -5.500      Z= -141.083
    1402   X=   -5.500      Y=    5.500      Z= -141.083
    1403   X=    5.500      Y=    5.500      Z= -141.083
    1404   X=    5.500      Y=   -5.500      Z= -141.083
C
C --- Section C  49" below Mating Plate, Lower Mast
C
    1501   X=   -5.500      Y=   -5.500      Z= -158.083
    1502   X=   -5.500      Y=    5.500      Z= -158.083
    1503   X=    5.500      Y=    5.500      Z= -158.083
    1504   X=    5.500      Y=   -5.500      Z= -158.083
C
C --- Section D  115" below Mating Plate, Lower Mast
C
    1601   X=   -5.500      Y=   -5.500      Z= -175.083
    1602   X=   -5.500      Y=    5.500      Z= -175.083
    1603   X=    5.500      Y=    5.500      Z= -175.083
    1604   X=    5.500      Y=   -5.500      Z= -175.083
C
C --- Section A Upper portion, 84.1" below Mating Plate, Lower Mast
C
    1701   X=   -5.500      Y=   -5.500      Z= -191.975
    1702   X=   -5.500      Y=    5.500      Z= -191.975
    1703   X=    5.500      Y=    5.500      Z= -191.975
    1704   X=    5.500      Y=   -5.500      Z= -191.975
C
C --- Section A  Bottom plate, 96.6" below Mating Plate, Lower Mast
C
    1801   X=   -5.500      Y=   -5.500      Z= -194.225
    1802   X=   -5.500      Y=    5.500      Z= -194.225
    1803   X=    5.500      Y=    5.500      Z= -194.225
    1804   X=    5.500      Y=   -5.500      Z= -194.225
C
C --- Camera Roll Assembly
C     Conservatively, assume C.G. @ 20.6" below Lower Mast Bottom Plate
C     14.5" eccentricity at Pipe 4
C
    2001   X=    5.500      Y=   -5.500      Z= -194.225-20.6
C
C --- Nodes for the Riser Model
C
C 299    X=0.          Y= 0.        Z= 0.     : TOP OF 20" PIPE
 3002    X=23.25       Y= 0.        Z= 6.     : TOP OF 12" PIPE
 3003    X=15.         Y=-14.75     Z= 12.    : TOP OF  8" PIPE
 3004    X=15.         Y= 14.75     Z= 12.    : TOP OF  8" PIPE
 3005    X=0.          Y= 0.        Z=-10.7   : CENTER OF 20" PIPE
 3006    X=23.25       Y= 0.        Z=-10.7   : CENTER OF 12" PIPE
 3007    X=15.         Y=-14.75     Z=-10.7   : CENTER OF  8" PIPE
 3008    X=15.         Y= 14.75     Z=-10.7   : CENTER OF  8" PIPE
 3009    X=9.5         Y= 0.        Z=-10.7   : CENTER OF 3" PLATE
 3010    X=10.07645    Y= 0.        Z=-10.7   : Point of Application of force on 3"
 Plate
 3011    X=9.5         Y= 0.        Z=-24.    : BOTTOM OF MPF, CENTER OF 3/4" PLATE

 3021    X=9.5         Y= 0.        Z=-141.5  G=3011,3021,1
C                                             : DOME OF CONCRETE TANK

C ***********************************************************************
RESTRAINTS
C
C    299   299 1  R=1,1,1,1,1,1
C
 3021    R=1,1,1,1,1,1   : TANK DOME AT RADIUS 20 FEET
```



```
C ***********************************************************************
C    SPRINGS
C       299   K=9E12,9E12,9E12,9E15,9E15,9E15
C
C
C ***********************************************************************
FRAME
NM=13    X=0  Y=0  Z=-1,-1,-1,-1
C
C --- Material properties
C  ...Stiff beams which connect from Master node No. 299 to bolt holes
  1  A=9E9  J=9E9  I=9E9,9E9  AS=9E9,9E9  E=1   G=1   W=0.0   M=0.0
C
C  ...Steel Pipes   (Dwg No. 42-8) 1 1/4 ips
  2  SH=P  T=1.66,0.14   E=29000.  W=.669*.49/1728 M=.669*.49/1728/386.4
C
C  ...3/16" Thick X-braces (Dwg No. 40-5)
  3  SH=R  T=1,0.1875    E=29000.  W=.188*.49/1728 M=.188*.49/1728/386.4
C
C  ...3/8" Thick light supp (Dwg No. 40-4) Lower Mast Sections B-B, C-C
  4  SH=R  T=1,0.375     E=29000.  W=.375*.49/1728 M=.375*.49/1728/386.4
C
C  ...Short link from center of pipes to braces
  5  A=9E4 J=9E6  I=9E6,9E6   AS=9E6,9E6  E=1. G=1. W=0.0 M=0.0
C
C  ...Gas Pipes (Dwg No. 40-12) Lower Mast Section A-A
  6  SH=P  T=0.675,0.15   E=29000.  W=.247*.49/1728 M=.247*.49/1728/386.4
C
C  ...Stiff beams which connect from lower mast bottom plate to C.G. of camera
  7  A=9E5  J=9E7  I=9E7,9E7  AS=9E5,9E5  E=1   G=1   W=0.0   M=0.0
C
C --- BEAM SECTIONS from the RISER ASSEMBLY
C
  8  SH=P  T=20.000,.5  E=29000.  W=30.63*.490/1728 M=30.63*.490/1728/386.4
  9  SH=P  T=12.750,.5  E=29000.  W=19.24*.490/1728 M=19.24*.490/1728/386.4
 10  SH=P  T= 8.625,.5  E=29000.  W=12.76*.490/1728 M=12.76*.490/1728/386.4
 11  SH=P  T=45.500,.5  E=29000.  W=70.69*.490/1728 M=70.69*.490/1728/386.4
 12  SH=P  T=43.000,.5  E=29000.  W=66.76*.490/1728 M=66.76*.490/1728/386.4
 13  A=1E6 J=1E8 I=1E8,1E8  E=1. : RIGID LINK
C
C --- Weightless stiff beams connect from bolt holes to Master node 299
C
  101 299  201 M=1  LP=0,63        :  LR=0,1,0,0,1,1
  102 299  202 M=1  LP=0,63        :  LR=0,1,0,0,1,1
  103 299  203 M=1  LP=0,63        :  LR=0,1,0,0,1,1
  104 299  204 M=1  LP=0,63        :  LR=0,1,0,0,1,1
  105 299  205 M=1  LP=0,63        :  LR=0,1,0,0,1,1
  106 299  206 M=1  LP=0,63        :  LR=0,1,0,0,1,1
  107 299  207 M=1  LP=0,63        :  LR=0,1,0,0,1,1
  108 299  208 M=1  LP=0,63        :  LR=0,1,0,0,1,1
  109 299  209 M=1  LP=0,63        :  LR=0,1,0,0,1,1
  110 299  210 M=1  LP=0,63        :  LR=0,1,0,0,1,1
  111 299  211 M=1  LP=0,63        :  LR=0,1,0,0,1,1
  112 299  212 M=1  LP=0,63        :  LR=0,1,0,0,1,1
  113 299  213 M=1  LP=0,63        :  LR=0,1,0,0,1,1
  114 299  214 M=1  LP=0,63        :  LR=0,1,0,0,1,1
  115 299  215 M=1  LP=0,63        :  LR=0,1,0,0,1,1
  116 299  216 M=1  LP=0,63        :  LR=0,1,0,0,1,1
  117 299  217 M=1  LP=0,63        :  LR=0,1,0,0,1,1
  118 299  218 M=1  LP=0,63        :  LR=0,1,0,0,1,1
  119 299  219 M=1  LP=0,63        :  LR=0,1,0,0,1,1
  120 299  220 M=1  LP=0,63        :  LR=0,1,0,0,1,1
C
C --- Steel Pipes
C
  201  181  301 M=2  LP=3,0
```



4 2 13

```
202  141  302 M=2  LP=3,0
203  145  303 M=2  LP=3,0
204  185  304 M=2  LP=3,0
205  301  401 M=2  LP=3,0
206  302  402 M=2  LP=3,0
207  303  403 M=2  LP=3,0
208  304  404 M=2  LP=3,0
209  401  501 M=2  LP=3,0
210  402  502 M=2  LP=3,0
211  403  503 M=2  LP=3,0
212  404  504 M=2  LP=3,0
213  401  501 M=2  LP=3,0
214  402  502 M=2  LP=3,0
215  403  503 M=2  LP=3,0
216  404  504 M=2  LP=3,0
217  501  601 M=2  LP=3,0
218  502  602 M=2  LP=3,0
219  503  603 M=2  LP=3,0
220  504  604 M=2  LP=3,0
221  601  701 M=2  LP=3,0
222  602  702 M=2  LP=3,0
223  603  703 M=2  LP=3,0
224  604  704 M=2  LP=3,0
225  701  801 M=2  LP=3,0
226  702  802 M=2  LP=3,0
227  703  803 M=2  LP=3,0
228  704  804 M=2  LP=3,0
229  801  901 M=2  LP=3,0
230  802  902 M=2  LP=3,0
231  803  903 M=2  LP=3,0
232  804  904 M=2  LP=3,0
233  901 1001 M=2  LP=3,0
234  902 1002 M=2  LP=3,0
235  903 1003 M=2  LP=3,0
236  904 1004 M=2  LP=3,0
237 1001 1101 M=2  LP=3,0
238 1002 1102 M=2  LP=3,0
239 1003 1103 M=2  LP=3,0
240 1004 1104 M=2  LP=3,0
241 1101 1201 M=2  LP=3,0
242 1102 1202 M=2  LP=3,0
243 1103 1203 M=2  LP=3,0
244 1104 1204 M=2  LP=3,0
245 1201 1301 M=2  LP=3,0
246 1202 1302 M=2  LP=3,0
247 1203 1303 M=2  LP=3,0
248 1204 1304 M=2  LP=3,0
249 1301 1401 M=2  LP=3,0
250 1302 1402 M=2  LP=3,0
251 1303 1403 M=2  LP=3,0
252 1304 1404 M=2  LP=3,0
253 1401 1501 M=2  LP=3,0
254 1402 1502 M=2  LP=3,0
255 1403 1503 M=2  LP=3,0
256 1404 1504 M=2  LP=3,0
257 1501 1601 M=2  LP=3,0
258 1502 1602 M=2  LP=3,0
259 1503 1603 M=2  LP=3,0
260 1504 1604 M=2  LP=3,0
261 1601 1701 M=2  LP=3,0
262 1602 1702 M=2  LP=3,0
263 1603 1703 M=2  LP=3,0
264 1604 1704 M=2  LP=3,0
265 1701 1801 M=2  LP=3,0
266 1702 1802 M=2  LP=3,0
267 1703 1803 M=2  LP=3,0
```





```
268 1704 1804 M=2  LP=3,0
C
C --- Short stiff beams between center of holes to Cross braces
C
301  301  311 M=5  LP=0,81    :  LR=0,1,0,0,1,1
302  302  312 M=5  LP=0,41    :  LR=0,1,0,0,1,1
303  303  313 M=5  LP=0,45    :  LR=0,1,0,0,1,1
304  304  314 M=5  LP=0,85    :  LR=0,1,0,0,1,1
305  401  411 M=5  LP=0,81    :  LR=0,1,0,0,1,1
306  402  412 M=5  LP=0,41    :  LR=0,1,0,0,1,1
307  403  413 M=5  LP=0,45    :  LR=0,1,0,0,1,1
308  404  414 M=5  LP=0,85    :  LR=0,1,0,0,1,1
309  501  511 M=5  LP=0,81    :  LR=0,1,0,0,1,1
310  502  512 M=5  LP=0,41    :  LR=0,1,0,0,1,1
311  503  513 M=5  LP=0,45    :  LR=0,1,0,0,1,1
312  504  514 M=5  LP=0,85    :  LR=0,1,0,0,1,1
313  601  611 M=5  LP=0,81    :  LR=0,1,0,0,1,1
314  602  612 M=5  LP=0,41    :  LR=0,1,0,0,1,1
315  603  613 M=5  LP=0,45    :  LR=0,1,0,0,1,1
316  604  614 M=5  LP=0,85    :  LR=0,1,0,0,1,1
317  701  711 M=5  LP=0,81    :  LR=0,1,0,0,1,1
318  702  712 M=5  LP=0,41    :  LR=0,1,0,0,1,1
319  703  713 M=5  LP=0,45    :  LR=0,1,0,0,1,1
320  704  714 M=5  LP=0,85    :  LR=0,1,0,0,1,1
321  801  811 M=5  LP=0,81    :  LR=0,1,0,0,1,1
322  802  812 M=5  LP=0,41    :  LR=0,1,0,0,1,1
323  803  813 M=5  LP=0,45    :  LR=0,1,0,0,1,1
324  804  814 M=5  LP=0,85    :  LR=0,1,0,0,1,1
325  901  911 M=5  LP=0,81    :  LR=0,1,0,0,1,1
326  902  912 M=5  LP=0,41    :  LR=0,1,0,0,1,1
327  903  913 M=5  LP=0,45    :  LR=0,1,0,0,1,1
328  904  914 M=5  LP=0,85    :  LR=0,1,0,0,1,1
329 1001 1011 M=5  LP=0,81    :  LR=0,1,0,0,1,1
330 1002 1012 M=5  LP=0,41    :  LR=0,1,0,0,1,1
331 1003 1013 M=5  LP=0,45    :  LR=0,1,0,0,1,1
332 1004 1014 M=5  LP=0,85    :  LR=0,1,0,0,1,1
333 1201 1211 M=5  LP=0,81    :  LR=0,1,0,0,1,1
334 1202 1212 M=5  LP=0,41    :  LR=0,1,0,0,1,1
335 1203 1213 M=5  LP=0,45    :  LR=0,1,0,0,1,1
336 1204 1214 M=5  LP=0,85    :  LR=0,1,0,0,1,1
337 1301 1311 M=5  LP=0,81    :  LR=0,1,0,0,1,1
338 1302 1312 M=5  LP=0,41    :  LR=0,1,0,0,1,1
339 1303 1313 M=5  LP=0,45    :  LR=0,1,0,0,1,1
340 1304 1314 M=5  LP=0,85    :  LR=0,1,0,0,1,1
C
C --- Cross Braces
C
401  411  314 M=3  LP=0,611
402  412  311 M=3  LP=0,612
403  413  312 M=3  LP=0,613
404  414  313 M=3  LP=0,614
405  611  514 M=3  LP=0,411
406  612  511 M=3  LP=0,412
407  613  512 M=3  LP=0,413
408  614  513 M=3  LP=0,414
409  811  714 M=3  LP=0,411
410  812  711 M=3  LP=0,412
411  813  712 M=3  LP=0,413
412  814  713 M=3  LP=0,414
413 1011  914 M=3  LP=0,411
414 1012  911 M=3  LP=0,412
415 1013  912 M=3  LP=0,413
416 1014  913 M=3  LP=0,414
417 1311 1214 M=3  LP=0,411
418 1312 1211 M=3  LP=0,412
419 1313 1212 M=3  LP=0,413
```



4.2 14

```
  420 1314 1213 M=3  LP=0,414
C
C --- 3/8" Light support (Dwg no. 40-4), Lower mast Section B-B, C-C
C
  501 1401 1403 M=4  LP=0,1402  RE=0.803,0.803
  502 1501 1503 M=4  LP=0,1502  RE=0.803,0.803
  503 1601 1603 M=4  LP=0,1602  RE=0.803,0.803
C
C --- 3/8" Gas Pipe (Dwg no. 40-12), Lower mast Section A-A
C
  504 1702 1703 M=6  LP=0,1704  RE=0.803,0.803
  505 1704 1703 M=6  LP=0,1701  RE=0.803,0.803
C
C --- Stiff beam connections from Lower Mast bottom plates to Camera
C
  601 1801 2001 M=7  LP=3
  602 1802 2001 M=7  LP=3
  603 1803 2001 M=7  LP=3
  604 1804 2001 M=7  LP=3
C
C --- Beams from the Riser Model, MPF-03
C
 1001  299 3005   M=8  LP= 3,0
 1002 3002 3006   M=9  LP= 3,0
 1003 3003 3007   M=10 LP= 3,0
 1004 3004 3008   M=10 LP= 3,0
 1005 3005 3009   M=13 LP=-2,0
 1006 3006 3009   M=13 LP=-2,0
 1007 3007 3009   M=13 LP=-2,0
 1008 3008 3009   M=13 LP=-2,0
 1009 3010 3009   M=13 LP=-2,0
 1010 3009 3011   M=11 LP= 3,0
 1011 3011 3012   M=12 LP= 3,0 G=9,1,1,1,0,0

C
C ***************************************************************************
SHELL
 NM=1  O=1   X=0  Y=0  Z=-1,-1,-1,-1
C
C --- Adjustment of Weight of plate to account for unmodelled parts
C     Scale factor = 1.377
C
 1    E=29000. U=0.25 W=0.49*1.377/1728  M=0.49*1.377/1728/386.4  :Steel Plates
C
C --- Shielding Plate 3" thick
C
C  ... OUTER RING
C
 1001  JQ=  1, 21,  2, 22  ETYPE=0  M=1  TH=3.0   LP=0
 1002  JQ=  2, 22,  3, 23  ETYPE=0  M=1  TH=3.0   LP=0
 1003  JQ=  3, 23, 45      ETYPE=0  M=1  TH=3.0   LP=0
 1004  JQ= 45, 23, 24      ETYPE=0  M=1  TH=3.0   LP=0
 1005  JQ= 45, 24,  4      ETYPE=0  M=1  TH=3.0   LP=0
 1006  JQ=  4, 24,  5, 25  ETYPE=0  M=1  TH=3.0   LP=0
 1007  JQ=  5, 25,  6, 26  ETYPE=0  M=1  TH=3.0   LP=0
 1008  JQ=  6, 26,  7, 27  ETYPE=0  M=1  TH=3.0   LP=0
 1009  JQ=  7, 27,  8, 28  ETYPE=0  M=1  TH=3.0   LP=0
 1010  JQ=  8, 28, 41      ETYPE=0  M=1  TH=3.0   LP=0
 1011  JQ= 41, 28, 29      ETYPE=0  M=1  TH=3.0   LP=0
 1012  JQ= 41, 29,  9      ETYPE=0  M=1  TH=3.0   LP=0
 1013  JQ=  9, 29, 10, 30  ETYPE=0  M=1  TH=3.0   LP=0
 1014  JQ= 10, 30, 11, 31  ETYPE=0  M=1  TH=3.0   LP=0
C
 1015  JQ= 11, 31, 12, 32  ETYPE=0  M=1  TH=3.0   LP=0
 1016  JQ= 12, 32, 13, 33  ETYPE=0  M=1  TH=3.0   LP=0
 1017  JQ= 13, 33, 81      ETYPE=0  M=1  TH=3.0   LP=0
```





```
 1018  JQ= 81, 33, 34      ETYPE=0  M=1  TH=3.0   LP=0
 1019  JQ= 81, 34, 14      ETYPE=0  M=1  TH=3.0   LP=0
 1020  JQ= 14, 34, 15, 35  ETYPE=0  M=1  TH=3.0   LP=0
 1021  JQ= 15, 35, 16, 36  ETYPE=0  M=1  TH=3.0   LP=0
 1022  JQ= 16, 36, 17, 37  ETYPE=0  M=1  TH=3.0   LP=0
 1023  JQ= 17, 37, 18, 38  ETYPE=0  M=1  TH=3.0   LP=0
 1024  JQ= 18, 38, 85      ETYPE=0  M=1  TH=3.0   LP=0
 1025  JQ= 85, 38, 39      ETYPE=0  M=1  TH=3.0   LP=0
 1026  JQ= 85, 39, 19      ETYPE=0  M=1  TH=3.0   LP=0
 1027  JQ= 19, 39, 20, 40  ETYPE=0  M=1  TH=3.0   LP=0
 1028  JQ= 20, 40,  1, 21  ETYPE=0  M=1  TH=3.0   LP=0
C
C
C ... CIRCULAR & SQUARE BOUNDARY PLATES
C
 1101  JQ= 65,  1, 55,  2  ETYPE=0  M=1  TH=3.0   LP=0
 1102  JQ= 55,  2, 45,  3  ETYPE=0  M=1  TH=3.0   LP=0
 1103  JQ= 44, 45,  5,  4  ETYPE=0  M=1  TH=3.0   LP=0
 1104  JQ= 43, 44,  6,  5  ETYPE=0  M=1  TH=3.0   LP=0
 1105  JQ= 42, 43,  7,  6  ETYPE=0  M=1  TH=3.0   LP=0
 1106  JQ= 41, 42,  8,  7  ETYPE=0  M=1  TH=3.0   LP=0
 1107  JQ= 10, 51,  9, 41  ETYPE=0  M=1  TH=3.0   LP=0
 1108  JQ= 11, 61, 10, 51  ETYPE=0  M=1  TH=3.0   LP=0
 1109  JQ= 12, 71, 11, 61  ETYPE=0  M=1  TH=3.0   LP=0
 1110  JQ= 13, 81, 12, 71  ETYPE=0  M=1  TH=3.0   LP=0
 1111  JQ= 14, 15, 81, 82  ETYPE=0  M=1  TH=3.0   LP=0
 1112  JQ= 15, 16, 82, 83  ETYPE=0  M=1  TH=3.0   LP=0
 1113  JQ= 16, 17, 83, 84  ETYPE=0  M=1  TH=3.0   LP=0
 1114  JQ= 17, 18, 84, 85  ETYPE=0  M=1  TH=3.0   LP=0
 1115  JQ= 85, 19, 75, 20  ETYPE=0  M=1  TH=3.0   LP=0
 1116  JQ= 75, 20, 65,  1  ETYPE=0  M=1  TH=3.0   LP=0
C
C  ...INNER SQUARE PLATES
C
 1201  JQ= 51, 52, 41, 42  ETYPE=0  M=1  TH=3.0   LP=0
 1202  JQ= 52, 53, 42, 43  ETYPE=0  M=1  TH=3.0   LP=0
 1203  JQ= 53, 54, 43, 44  ETYPE=0  M=1  TH=3.0   LP=0
 1204  JQ= 54, 55, 44, 45  ETYPE=0  M=1  TH=3.0   LP=0
 1205  JQ= 61, 62, 51, 52  ETYPE=0  M=1  TH=3.0   LP=0
 1206  JQ= 62, 63, 52, 53  ETYPE=0  M=1  TH=3.0   LP=0
 1207  JQ= 63, 64, 53, 54  ETYPE=0  M=1  TH=3.0   LP=0
 1208  JQ= 64, 65, 54, 55  ETYPE=0  M=1  TH=3.0   LP=0
 1209  JQ= 71, 72, 61, 62  ETYPE=0  M=1  TH=3.0   LP=0
 1210  JQ= 72, 73, 62, 63  ETYPE=0  M=1  TH=3.0   LP=0
 1211  JQ= 73, 74, 63, 64  ETYPE=0  M=1  TH=3.0   LP=0
 1212  JQ= 74, 75, 64, 65  ETYPE=0  M=1  TH=3.0   LP=0
 1213  JQ= 81, 82, 71, 72  ETYPE=0  M=1  TH=3.0   LP=0
 1214  JQ= 82, 83, 72, 73  ETYPE=0  M=1  TH=3.0   LP=0
 1215  JQ= 83, 84, 73, 74  ETYPE=0  M=1  TH=3.0   LP=0
 1216  JQ= 84, 85, 74, 75  ETYPE=0  M=1  TH=3.0   LP=0
C
C --- MANIFOLD TUBE 2" THICK, 4" TALL
C
 2001  JQ=121,122, 21, 22  ETYPE=0  M=1  TH=2.00  LP=0
 2002  JQ=122,123, 22, 23  ETYPE=0  M=1  TH=2.00  LP=0
 2003  JQ=123,124, 23, 24  ETYPE=0  M=1  TH=2.00  LP=0
 2004  JQ=124,125, 24, 25  ETYPE=0  M=1  TH=2.00  LP=0
 2005  JQ=125,126, 25, 26  ETYPE=0  M=1  TH=2.00  LP=0
 2006  JQ=126,127, 26, 27  ETYPE=0  M=1  TH=2.00  LP=0
 2007  JQ=127,128, 27, 28  ETYPE=0  M=1  TH=2.00  LP=0
 2008  JQ=128,129, 28, 29  ETYPE=0  M=1  TH=2.00  LP=0
 2009  JQ=129,130, 29, 30  ETYPE=0  M=1  TH=2.00  LP=0
 2010  JQ=130,131, 30, 31  ETYPE=0  M=1  TH=2.00  LP=0
 2011  JQ=131,132, 31, 32  ETYPE=0  M=1  TH=2.00  LP=0
 2012  JQ=132,133, 32, 33  ETYPE=0  M=1  TH=2.00  LP=0
 2013  JQ=133,134, 33, 34  ETYPE=0  M=1  TH=2.00  LP=0
```

```
2014  JQ=134,135, 34, 35  ETYPE=0  M=1  TH=2.00  LP=0
2015  JQ=135,136, 35, 36  ETYPE=0  M=1  TH=2.00  LP=0
2016  JQ=136,137, 36, 37  ETYPE=0  M=1  TH=2.00  LP=0
2017  JQ=137,138, 37, 38  ETYPE=0  M=1  TH=2.00  LP=0
2018  JQ=138,139, 38, 39  ETYPE=0  M=1  TH=2.00  LP=0
2019  JQ=139,140, 39, 40  ETYPE=0  M=1  TH=2.00  LP=0
2020  JQ=140,121, 40, 21  ETYPE=0  M=1  TH=2.00  LP=0
C
C --- Flange plate  3/4" thick
C
C  ... INNER RING
C
3001  JQ=101,121,102,122  ETYPE=0  M=1  TH=0.75  LP=0
3002  JQ=102,122,103,123  ETYPE=0  M=1  TH=0.75  LP=0
3003  JQ=103,123,145      ETYPE=0  M=1  TH=0.75  LP=0
3004  JQ=145,123,124      ETYPE=0  M=1  TH=0.75  LP=0
3005  JQ=143,124,104      ETYPE=0  M=1  TH=0.75  LP=0
3006  JQ=104,124,105,125  ETYPE=0  M=1  TH=0.75  LP=0
3007  JQ=105,125,106,126  ETYPE=0  M=1  TH=0.75  LP=0
3008  JQ=106,126,107,127  ETYPE=0  M=1  TH=0.75  LP=0
3009  JQ=107,127,108,128  ETYPE=0  M=1  TH=0.75  LP=0
3010  JQ=108,128,141      ETYPE=0  M=1  TH=0.75  LP=0
3011  JQ=141,128,129      ETYPE=0  M=1  TH=0.75  LP=0
3012  JQ=141,129,109      ETYPE=0  M=1  TH=0.75  LP=0
3013  JQ=109,129,110,130  ETYPE=0  M=1  TH=0.75  LP=0
3014  JQ=110,130,111,131  ETYPE=0  M=1  TH=0.75  LP=0
C
3015  JQ=111,131,112,132  ETYPE=0  M=1  TH=0.75  LP=0
3016  JQ=112,132,113,133  ETYPE=0  M=1  TH=0.75  LP=0
3017  JQ=113,133,181      ETYPE=0  M=1  TH=0.75  LP=0
3018  JQ=181,133,134      ETYPE=0  M=1  TH=0.75  LP=0
3019  JQ=181,134,114      ETYPE=0  M=1  TH=0.75  LP=0
3020  JQ=114,134,115,135  ETYPE=0  M=1  TH=0.75  LP=0
3021  JQ=115,135,116,136  ETYPE=0  M=1  TH=0.75  LP=0
3022  JQ=116,136,117,137  ETYPE=0  M=1  TH=0.75  LP=0
3023  JQ=117,137,118,138  ETYPE=0  M=1  TH=0.75  LP=0
3024  JQ=118,138,185      ETYPE=0  M=1  TH=0.75  LP=0
3025  JQ=185,138,139      ETYPE=0  M=1  TH=0.75  LP=0
3026  JQ=185,139,119      ETYPE=0  M=1  TH=0.75  LP=0
3027  JQ=119,139,120,140  ETYPE=0  M=1  TH=0.75  LP=0
3028  JQ=120,140,101,121  ETYPE=0  M=1  TH=0.75  LP=0
C
C ... CIRCULAR & SQUARE BOUNDARY PLATES
C
3101  JQ=165,101,155,102  ETYPE=0  M=1  TH=0.75  LP=0
3102  JQ=155,102,145,103  ETYPE=0  M=1  TH=0.75  LP=0
3103  JQ=144,145,105,104  ETYPE=0  M=1  TH=0.75  LP=0
3104  JQ=143,144,106,105  ETYPE=0  M=1  TH=0.75  LP=0
3105  JQ=142,143,107,106  ETYPE=0  M=1  TH=0.75  LP=0
3106  JQ=141,142,108,107  ETYPE=0  M=1  TH=0.75  LP=0
3107  JQ=110,151,109,141  ETYPE=0  M=1  TH=0.75  LP=0
3108  JQ=111,161,110,151  ETYPE=0  M=1  TH=0.75  LP=0
3109  JQ=112,171,111,161  ETYPE=0  M=1  TH=0.75  LP=0
3110  JQ=113,181,112,171  ETYPE=0  M=1  TH=0.75  LP=0
3111  JQ=114,115,181,182  ETYPE=0  M=1  TH=0.75  LP=0
3112  JQ=115,116,182,183  ETYPE=0  M=1  TH=0.75  LP=0
3113  JQ=116,117,183,184  ETYPE=0  M=1  TH=0.75  LP=0
3114  JQ=117,118,184,185  ETYPE=0  M=1  TH=0.75  LP=0
3115  JQ=185,119,175,120  ETYPE=0  M=1  TH=0.75  LP=0
3116  JQ=175,120,165,101  ETYPE=0  M=1  TH=0.75  LP=0
C
C  ...INNER SQUARE PLATES
C
3201  JQ=151,152,141,142  ETYPE=0  M=1  TH=0.75  LP=0
3202  JQ=152,153,142,143  ETYPE=0  M=1  TH=0.75  LP=0
3203  JQ=153,154,143,144  ETYPE=0  M=1  TH=0.75  LP=0
```





```
3204  JQ=154,155,144,145  ETYPE=0  M=1  TH=0.75  LP=0
3205  JQ=161,162,151,152  ETYPE=0  M=1  TH=0.75  LP=0
3206  JQ=162,163,152,153  ETYPE=0  M=1  TH=0.75  LP=0
3207  JQ=163,164,153,154  ETYPE=0  M=1  TH=0.75  LP=0
3208  JQ=164,165,154,155  ETYPE=0  M=1  TH=0.75  LP=0
3209  JQ=171,172,161,162  ETYPE=0  M=1  TH=0.75  LP=0
3210  JQ=172,173,162,163  ETYPE=0  M=1  TH=0.75  LP=0
3211  JQ=173,174,163,164  ETYPE=0  M=1  TH=0.75  LP=0
3212  JQ=174,175,164,165  ETYPE=0  M=1  TH=0.75  LP=0
3213  JQ=181,182,171,172  ETYPE=0  M=1  TH=0.75  LP=0
3214  JQ=182,183,172,173  ETYPE=0  M=1  TH=0.75  LP=0
3215  JQ=183,184,173,174  ETYPE=0  M=1  TH=0.75  LP=0
3216  JQ=184,185,174,175  ETYPE=0  M=1  TH=0.75  LP=0
C
C ... 2ND TO THE OUTER RING  (BOLT LOCATIONS)
C
3301  JQ=121,201,122,202  ETYPE=0  M=1  TH=0.75  LP=0
3302  JQ=122,202,123,203  ETYPE=0  M=1  TH=0.75  LP=0
3303  JQ=123,203,124,204  ETYPE=0  M=1  TH=0.75  LP=0
3304  JQ=124,204,125,205  ETYPE=0  M=1  TH=0.75  LP=0
3305  JQ=125,205,126,206  ETYPE=0  M=1  TH=0.75  LP=0
3306  JQ=126,206,127,207  ETYPE=0  M=1  TH=0.75  LP=0
3307  JQ=127,207,128,208  ETYPE=0  M=1  TH=0.75  LP=0
3308  JQ=128,208,129,209  ETYPE=0  M=1  TH=0.75  LP=0
3309  JQ=129,209,130,210  ETYPE=0  M=1  TH=0.75  LP=0
3310  JQ=130,210,131,211  ETYPE=0  M=1  TH=0.75  LP=0
C
3311  JQ=131,211,132,212  ETYPE=0  M=1  TH=0.75  LP=0
3312  JQ=132,212,133,213  ETYPE=0  M=1  TH=0.75  LP=0
3313  JQ=133,213,134,214  ETYPE=0  M=1  TH=0.75  LP=0
3314  JQ=134,214,135,215  ETYPE=0  M=1  TH=0.75  LP=0
3315  JQ=135,215,136,216  ETYPE=0  M=1  TH=0.75  LP=0
3316  JQ=136,216,137,217  ETYPE=0  M=1  TH=0.75  LP=0
3317  JQ=137,217,138,218  ETYPE=0  M=1  TH=0.75  LP=0
3318  JQ=138,218,139,219  ETYPE=0  M=1  TH=0.75  LP=0
3319  JQ=139,219,140,220  ETYPE=0  M=1  TH=0.75  LP=0
3320  JQ=140,220,121,201  ETYPE=0  M=1  TH=0.75  LP=0
C
C ... OUTER RING
C
3401  JQ=201,221,202,222  ETYPE=0  M=1  TH=0.75  LP=0
3402  JQ=202,222,203,223  ETYPE=0  M=1  TH=0.75  LP=0
3403  JQ=203,223,204,224  ETYPE=0  M=1  TH=0.75  LP=0
3404  JQ=204,224,205,225  ETYPE=0  M=1  TH=0.75  LP=0
3405  JQ=205,225,206,226  ETYPE=0  M=1  TH=0.75  LP=0
3406  JQ=206,226,207,227  ETYPE=0  M=1  TH=0.75  LP=0
3407  JQ=207,227,208,228  ETYPE=0  M=1  TH=0.75  LP=0
3408  JQ=208,228,209,229  ETYPE=0  M=1  TH=0.75  LP=0
3409  JQ=209,229,210,230  ETYPE=0  M=1  TH=0.75  LP=0
3410  JQ=210,230,211,231  ETYPE=0  M=1  TH=0.75  LP=0
C
3411  JQ=211,231,212,232  ETYPE=0  M=1  TH=0.75  LP=0
3412  JQ=212,232,213,233  ETYPE=0  M=1  TH=0.75  LP=0
3413  JQ=213,233,214,234  ETYPE=0  M=1  TH=0.75  LP=0
3414  JQ=214,234,215,235  ETYPE=0  M=1  TH=0.75  LP=0
3415  JQ=215,235,216,236  ETYPE=0  M=1  TH=0.75  LP=0
3416  JQ=216,236,217,237  ETYPE=0  M=1  TH=0.75  LP=0
3417  JQ=217,237,218,238  ETYPE=0  M=1  TH=0.75  LP=0
3418  JQ=218,238,219,239  ETYPE=0  M=1  TH=0.75  LP=0
3419  JQ=219,239,220,240  ETYPE=0  M=1  TH=0.75  LP=0
3420  JQ=220,240,201,221  ETYPE=0  M=1  TH=0.75  LP=0
C
C --- Mating Plate Upper/Lower Mast,  1/2" thick
C
4001  JQ=1101,1104,1102,1103  ETYPE=0  M=1  TH=0.5  LP=0
C
```

4 2 16

```
C --- Bottom Plate, 1/2" thick
C
 4002  JQ=1801,1804,1802,1803   ETYPE=0  M=1  TH=0.5  LP=0

C ***********************************************************************
LOADS
2001  L=1  F=0,0,-.128
C
C --- Loads from the Riser Model, MPF-03
C
 299  F=0,0,-.441            L=1
3002  F=0,0,-.247            L=1
3003  F=0,0,-.11762          L=1
3004  F=0,0,-.11762          L=1
3009  F=0,0,-.0191           L=1 :  19.1 lbs
3010  F=0,0,-2.538           L=1
3011  F=0,0,-.29676)        L=1 : 244.3 lbs + 45.66 lbs + 6.8 lbs

C ***********************************************************************
MASSES
2001  M= .128/386.4,.128/386.4,.128/386.4
C
C --- Masses from the Riser Model, MPF-03
C
 299  M=  .441/386.4,  .441/386.4,  .441/386.4
3002  M=  .247/386.4,  .247/386.4,  .247/386.4
3003  M=.11762/386.4,.11762/386.4,.11762/386.4
3004  M=.11762/386.4,.11762/386.4,.11762/386.4
3009  M= .0191/386.4, .0191/386.4, .0191/386.4
3010  M= 2.538/386.4, 2.538/386.4, 2.538/386.4
3011  M=.29676/386.4,.29676/386.4,.29676/386.4

C ***********************************************************************
SPEC
   S=386.4   A=0.0   D=0.02
C
C  Non-reactor Safety Class 2  2% damped Design Spectrum from Figure 3 and
C  Table 2, scaled by 0.6, SDC 4.1 Revision 12, Design Loads for Facilities
C
C  Convservatively, Sa is applied 100% in all 3 directions (2 hori., 1 vert)
C
C  Per(sec)   SAx(g)   SAy(g)   SAz(g)
    0.01000  0.12000  0.12000  0.12000
    0.01508  0.12000  0.12000  0.12000
    0.02015  0.12000  0.12000  0.12000
    0.02523  0.12000  0.12000  0.12000
    0.03030  0.12000  0.12000  0.12000
    0.03523  0.13362  0.13362  0.13362
    0.04015  0.14671  0.14671  0.14671
    0.04508  0.15935  0.15935  0.15935
    0.05000  0.17160  0.17160  0.17160
    0.05833  0.19158  0.19158  0.19158
    0.06667  0.21076  0.21076  0.21076
    0.07500  0.22927  0.22927  0.22927
    0.08333  0.24720  0.24720  0.24720
    0.09375  0.26884  0.26884  0.26884
    0.10417  0.28980  0.28980  0.28980
    0.11458  0.31016  0.31016  0.31016
    0.12500  0.33000  0.33000  0.33000
    0.23826  0.33000  0.33000  0.33000
    0.35152  0.33000  0.33000  0.33000
    0.46478  0.33000  0.33000  0.33000
    0.57803  0.33000  0.33000  0.33000
    0.66080  0.28898  0.28898  0.28898
    0.74356  0.25706  0.25706  0.25706
    0.82633  0.23151  0.23151  0.23151
```



```
    0.90909  0.21060  0.21060  0.21060
    1.09848  0.17444  0.17444  0.17444
    1.28788  0.14890  0.14890  0.14890
    1.47727  0.12990  0.12990  0.12990
    1.66667  0.11520  0.11520  0.11520
    1.87500  0.10263  0.10263  0.10263
    2.08333  0.09256  0.09256  0.09256
    2.29167  0.08430  0.08430  0.08430
    2.50000  0.07740  0.07740  0.07740
    2.83654  0.06825  0.06825  0.06825
    3.17308  0.06104  0.06104  0.06104
    3.50962  0.05521  0.05521  0.05521
    3.84615  0.05040  0.05040  0.05040
    4.44712  0.03741  0.03741  0.03741
    5.04808  0.02884  0.02884  0.02884
    5.64904  0.02289  0.02289  0.02289
    6.25000  0.01860  0.01860  0.01860
    7.18750  0.01403  0.01403  0.01403
    8.12500  0.01095  0.01095  0.01095
    9.06250  0.00878  0.00878  0.00878
   10.00000  0.00720  0.00720  0.00720

C ***********************************************************************
COMBO
1  C=1.0
2          D= 1.0
3  C=1.0   D= 1.0
4  C=1.0   D=-1.0
```



4 2.17

## 4.3 Input data file for SAPSTL

Since stainless steel is used, the SAPSTL built-in formulas for ordinary structural steel are not applicable. Hand calculations are given in this section to provide the input parameters for the allowable stresses to SAPSTL for combined stress evaluations. (refer to ANSI/AISC N690-1984, section Q1.5.9, "Austentic Stainless Steel").

The echoprint of the input data file, CM-A-04S, is also given in this section.

**URS Consultants**
**URS/John A. Blume & Associates, Engineers**

Job no. 66458-01 Job WHC/MPF ANALYSIS
Client
Subject SECTION PROPERTIES

Sheet No. 432
Calc. No.
Rev. No.
By PKL Date 6/1/94
Chk'd [illegible] Date 7/13/94

SAPSTL INPUT PARAMETERS ON SECTION PROPERTIES

STEEL PIPES

$E = 29{,}000$ Ksi
$f_y = 30$ Ksi

PIPE : COMPACT SECTION
$K = 2$ (LACINGS ARE STAGGERED)

ALLOWABLES :

$F_b = 1.6\,(0.66\,f_y) = 31.68$ Ksi

$F_{b\,min} = 1.6\,(0.75\,f_y) = 36$ Ksi

$F_{ac} = \left(\frac{f_y}{2.15} - \frac{\left(\frac{f_y}{2.15} - 6\right)}{120}\,\frac{Kl}{r}\right) \times 1.6$ $\qquad \frac{Kl}{r} = \frac{(2)(24)}{0.54} = 88.89 < 120$

— longest span — pipe

$= \left[13.95 - 0.0663\left(\frac{Kl}{r}\right)\right] \times 1.6 = 12.89$

$F_{at} = 1.6\,(0.6\,f_y) = 28.8$ Ksi

$F_v = 1.4\,(0.4\,f_y) = 16.8$ Ksi

LACINGS

$f_y = 25$ Ksi $\qquad b = 1''$ $\quad t = 3/16''$ $\quad \frac{b}{t} = 533 < \frac{52.5}{\sqrt{f_y}} = 10.5$ COMPACT SECT.

ALLOWABLES :

$F_b = 1.6\,(0.66\,f_y) = 26.4$ Ksi

$F_{b\,min} = 1.6\,(0.75\,f_y) = 30$ Ksi

$F_{ac} = \left[12 - \frac{1}{20}\left(\frac{kl}{r}\right)\right] \times 1.6$

$\frac{Kl}{r} = \frac{14.096}{0.054} = 261 > 200$ N.G. ←

use 1/4" THICKNESS INSTEAD of 3/16" ←

For $t = 1/4''$ $\quad \frac{Kl}{r} = \frac{14.096}{.072} = 195.8$

$F_{ac} = \left[12 - \frac{1}{20}(195.8)\right] \times 1.6 = 3.53$ Ksi

$F_t = 1.6\,(0.45\,f_y) = 18$ Ksi (ASSUME PIN-CONNECTION)

$F_v = 1.6\,(0.4\,f_y) = 16$ Ksi

**URS Consultants**
**URS/John A. Blume & Associates, Engineers**

Job no. 66458-01 Job WHC/MPF ANALYSIS
Client
Subject SECTION PROPERTIES

Sheet No. L 3.3
Calc. No.
Rev. No.
By [illegible] Date 6/1/94
Chk'd [illegible] Date 7/13/94

[illegible] SUPPORTS

$f_y = 25$ Ksi  $o = 1''$  $t = 3/8''$  $\frac{o}{t} = 2.67 < \frac{52.5}{\sqrt{f_y}} = 10.5$ COMPACT SECT

ALLOWABLES:

$F_b = 1.6\,(0.66\,f_y) = 26.4$ Ksi

$F_{b\,min} = 1.6\,(0.75\,f_y) = 30$ Ksi

$$\frac{Kl}{r} = \frac{1\,(15.56)}{0.108} = 144 > 120$$

$$F_{ac} = \left[12 - \frac{1}{20}\left(\frac{Kl}{r}\right)\right] \times 1.6 = 7.67 \text{ Ksi}$$

$$F_{at} = 1.6\,(0.45 f_y) = 18 \text{ Ksi}$$

$$F_v = 1.6\,(0.4\,f_y) = 16 \text{ Ksi}$$

3/8" GAS PIPES

$f_y = 25$ Ksi  PIPE → COMPACT

ALLOWABLES:

$F_b = 1.6\,(0.66\,f_y) = 26.4$ Ksi

$F_{b\,min} = 1.6\,(0.75\,f_y) = 30$ Ksi

$$\frac{Kl}{r} = \frac{11}{0.193} = 57 < 120$$

$$F_{ac} = \left[\frac{f_y}{2.15} - \frac{\left(\frac{f_y}{2.15} - 6\right)}{120}\left(\frac{Kl}{r}\right)\right] \times 1.6 = 14.33 \text{ Ksi}$$

$$F_{at} = 1.6\,(0.45 f_y) = 18 \text{ Ksi}$$

$$F_v = 1.6\,(0.4\,f_y) = 16 \text{ Ksi}$$

**URS Consultants**
**URS/John A. Blume & Associates, Engineers**

Job no. 66458-01 Job WHC/MPF ANALYSIS
Client
Subject

Sheet No. 43.4
Calc. No.
Rev. No.
By PKL Date 6/2/94
Chk'd [illegible] Date 7/3/94

SAPSTL INPUT PARAMETERS FOR "FRAME"

STEEL PIPES : K = 2 , C = 0.85 (K = 2 LACINGS ARE STAGGERED)

LACINGS : K = 1 , C = 0.85
(use 1/4" THICK)

LIGHT SUPPORT : K = 1 , C = 0.85

GAS PIPES : K = 1 , C = 0.85

```
WHC/MPF CAMERA ASSEMBLY ANALYSIS  JOB#: 66458-01  RUN ID: CM-A-04S
C ***************************************************************************
C
C   Units = Kips, in   fy=60 ksi   Steel density=490 pcf = 0.0002836 kci
C ***************************************************************************
C
C   Update Log

    Date     By       Version        Description
C   5/26/94  PKL      CM-A-01S       SAPSTL for SAP90 run CM-A-01
C   5/27/94  PKL      CM-A-02S       SAPSTL for SAP90 run CM-A-02
C   5/31/94  PKL      CM-A-03S       SAPSTL for SAP90 run CM-A-03
C   6/02/94  PKL      CM-A-03S       SAPSTL for SAP90 run CM-A-04
C
C ***************************************************************************
C
C   Computer Models Naming Nomenclature
C   SAP90 files are named using the following terminology:
C        CM-A-01S.ext   (*.ext  as described by SAP90 Manual)
C        12345678
C
C   where:    Character      Description
C                1-2         CM= Camera Assembly Model
C                4           A = Model A, B, C.. etc
C                5           Model A, B, C... etc.
C                6-7         Run Number
C                8           S denotes SAPSTL file
C
C ***************************************************************************
CONTROL
IX=2                                   :DATACHECK=1,  NORMAL=0, STRESS FILE=2
C
C ***************************************************************************
COMBO
 1  C=1
 2  D=1
 3  C=1,1   D=1
 4  C=1,-1  D=-1

C ***************************************************************************
SECTIONS
C
C --- Material properties
C  ...Stiff beams which connect from Master node No. 299 to bolt holes
C
  1  MN=N  A=9E9  J=9E9  I=9E9,9E9  AS=9E9,9E9  E=1   G=1   W=0.0   M=0.0
C
C  ...Steel Pipes (Dwg No. 42-8) 1 1/4 ips
C
  2  MN=S  SH=P  T=1.66,0.14   E=29000.  FY=30  F=31.68, 36, 12.89, 28.8, 16.8
C
C  ...3/16" Thick X-braces (Dwg No. 40-5)  ***REVISED to use 1/4" thick****
C
  3  MN=S  SH=R  T=1,0.25      E=29000.  FY=25  F=26.4, 30, 3.53, 18, 16
C
C  ...3/8" Thick light supp (Dwg No. 40-4) Lower Mast Sections B-B, C-C
C
  4  MN=S  SH=R  T=1,0.375     E=29000.  FY=25  F=26.4, 30, 7.67, 18, 16
C
C  ...Short link from center of pipes to braces
C
  5  MN=N  A=9E4 J=9E6  I=9E6,9E6   AS=9E6,9E6  E=1. G=1. W=0.0 M=0.0
C
C  ...Gas Pipes (Dwg No. 40-12) Lower Mast Section A-A
C
  6  MN=S  SH=P  T=0.675,0.15  E=29000.  FY=25  F=26.4, 30, 14.33, 18, 16
```



```
C
C  ...Stiff beams which connect from lower mast bottom plate to C.G. of camera
C
  7  MN=N  A=9E5  J=9E7  I=9E7,9E7  AS=9E5,9E5  E=1   G=1   W=0.0   M=0.0
C

C ***************************************************************************
FRAME
C
C  ...Steel Pipes   (Dwg No. 42-8) 1 1/4 ips
C
  201  268  1   T=1  M=2  K=2,2   C=0.85,0.85
C
C  ...3/16" Thick X-braces (Dwg No. 40-5)  ***REVISED to use 1/4" thick***
C
  401  420  1   T=1  M=3  K=1,1   C=0.85,0.85
C
C  ...3/8" Thick light supp (Dwg No. 40-4) Lower Mast Sections B-B, C-C
C
  501  503  1   T=1  M=4  K=1,1   C=0.85,0.85
C
C  ...Gas Pipes (Dwg No. 40-12) Lower Mast Section A-A
C
  504  505  1   T=1  M=6  K=1,1   C=0.85,0.85
```





43.5

## SECTION 5: SAP90/SAPSTL OUTPUT FILES

### TABLE OF CONTENTS


| SECTION | CONTENTS | PAGE NO. |
|---|---|---|
| 5.1 | General Discussion | 5.1.1 |
| 5.2 | Output files for SAP90 | 5.2.1 |
| 5.3 | Output file for SAPSTL | 5.3.1 — 5.3.14 |
| 5.4 | Selective graphical output | 5.4.1 — 5.4.60 |

## 5.1 General Discussion

SAP90 output

The extensions of the SAP90 output filename are described below:

| | |
|---|---|
| .SAP | Tabulated Input Data Echo |
| .EQN | Optimized Equation Numbers |
| .RIT | Frequencies & other Model Parameters |
| .SPC | Spectral Analysis Modal Factors |
| .SOL | Joint Displacements and Reactions |
| .F3F | FRAME element forces |
| .F4F | SHELL element stresses |
| .FEF | Element Joint forces |

SAPLOT Graphical Results

Using the SAPLOT graphics post-processor, SAP90 output such as mode shapes, shell element stresses are presented graphically.

SAPSTL output

The extensions of the SAPSTL output filename are described below:

| | |
|---|---|
| .STL | Echo of input data; K-factor values, controlling load combinations and stress ratios. |
| .SHR | not used in this analysis |

The SAPSTL output file, CM-A-04S.STL, is included in Section 5.3.

PC diskettes

The final runs of SAP90 / SAPSTL output files are saved on PC diskettes and they are provided with this documentation.

## 5.2 SAP90 Output

Since all of the output files are saved on PC diskettes, only selected output is printed for stress and displacement checking purposes in Sections 6 through 7.

## 5.3 SAPSTL Output

The SAPSTL output file, CM-A-04S.STL, is included in this Section.

| URS/John A. Blume & Associates, Engineers | | | |
|---|---|---|---|
| JOB No. | 66481-01 | | |
| CALC. No. | 5.3.1 thru 5.3.14 | | |
| BY | PKL | DATE | 6/8/94 |
| CKD | KPM | DATE | 7/13/94 |

```
WHC/MPF CAMERA ASSEMBLY ANALYSIS  JOB#: 66458-01  RUN ID: CM-A-04S
C ***************************************************************************
C
C   Units = Kips, in   fy=60 ksi   Steel density=490 pcf = 0.0002836 kci
C ***************************************************************************
C
C   Update Log
C
C   Date      By        Version        Description
C   5/26/94   PKL       CM-A-01S       SAPSTL for SAP90 run CM-A-01
C   5/27/94   PKL       CM-A-02S       SAPSTL for SAP90 run CM-A-02
C   5/31/94   PKL       CM-A-03S       SAPSTL for SAP90 run CM-A-03
C   6/02/94   PKL       CM-A-03S       SAPSTL for SAP90 run CM-A-04
C
C ***************************************************************************
C
C   Computer Models Naming Nomenclature
C   SAP90 files are named using the following terminology:
C        CM-A-01S.ext   (*.ext  as described by SAP90 Manual)
C        12345678
C
C   where:    Character      Description
C               1-2          CM= Camera Assembly Model
C               4            A = Model A, B, C.. etc
C               5            Model A, B, C... etc.
C               6-7          Run Number
C               8            S denotes SAPSTL file
C
C ***************************************************************************
CONTROL
IX=2                                  :DATACHECK=1,  NORMAL=0, STRESS FILE=2
C
C ***************************************************************************
COMBO
 1  C=1
 2  D=1
 3  C=1,1   D=1
 4  C=1,-1  D=-1

C ***************************************************************************
SECTIONS
C
C --- Material properties
C  ...Stiff beams which connect from Master node No. 299 to bolt holes
C
  1  MN=N  A=9E9  J=9E9  I=9E9,9E9  AS=9E9,9E9  E=1   G=1   W=0.0   M=0.0
C
C  ...Steel Pipes   (Dwg No. 42-8) 1 1/4 ips
C
  2  MN=S  SH=P  T=1.66,0.14   E=29000.  FY=30  F=31.68, 36, 12.89, 28.8, 16.8
C
C  ...3/16" Thick X-braces (Dwg No. 40-5)  ***REVISED to use 1/4" thick****
C
  3  MN=S  SH=R  T=1,0.25      E=29000.  FY=25  F=26.4, 30, 3.53, 18, 16
C
C  ...3/8" Thick light supp (Dwg No. 40-4) Lower Mast Sections B-B, C-C
C
  4  MN=S  SH=R  T=1,0.375     E=29000.  FY=25  F=26.4, 30, 7.67, 18, 16
C
C  ...Short link from center of pipes to braces
C
  5  MN=N  A=9E4 J=9E6  I=9E6,9E6   AS=9E6,9E6  E=1. G=1. W=0.0 M=0.0
C
C  ...Gas Pipes (Dwg No. 40-12) Lower Mast Section A-A
C
  6  MN=S  SH=P  T=0.675,0.15  E=29000.  FY=25  F=26.4, 30, 14.33, 18, 16
```



```
C
C  ...Stiff beams which connect from lower mast bottom plate to C.G. of camera
C
  7  MN=N  A=9E5  J=9E7  I=9E7,9E7  AS=9E5,9E5  E=1   G=1   W=0.0   M=0.0
C

C ***************************************************************************
FRAME
C
C  ...Steel Pipes   (Dwg No. 42-8) 1 1/4 ips
C
  201  268  1   T=1  M=2  K=2,2   C=0.85,0.85
C
C  ...3/16" Thick X-braces (Dwg No. 40-5)  ***REVISED to use 1/4" thick***
C
  401  420  1   T=1  M=3  K=1,1   C=0.85,0.85
C
C  ...3/8" Thick light supp (Dwg No. 40-4) Lower Mast Sections B-B, C-C
C
  501  503  1   T=1  M=4  K=1,1   C=0.85,0.85
C
C  ...Gas Pipes (Dwg No. 40-12) Lower Mast Section A-A
C
  504  505  1   T=1  M=6  K=1,1   C=0.85,0.85
```

5.3.3





```
      $$$$$$$     $$$$$$$    $$$$$$      $$$$$$$  $$$$$$$$$$  $$
     $$$$$$$$$   $$$$$$$$$   $$$$$$$$$  $$$$$$$$$  $$$$$$$$$$  $$
    $$          $$    $$   $$     $$  $$           $$      $$
   $$          $$    $$   $$     $$  $$           $$      $$
  $$$$$$$$    $$$$$$$$$   $$$$$$$$$  $$$$$$$$      $$      $$
       $$   $$    $$   $$                $$    $$      $$
      $$   $$    $$   $$                $$    $$      $$
$$$$$$$$$$   $$    $$   $$        $$$$$$$$$$    $$      $$$$$$$$$
$$$$$$$$    $$    $$   $$         $$$$$$$$     $$      $$$$$$$$$
```

STEEL STRESS CHECK FOR SAP90

VERSION P5.41

Copyright (C) 1986-1992
ASHRAF HABIBULLAH AND EDWARD L. WILSON
All rights reserved

PAGE 1
SAP90 FILE:CM-A-04/SAPSTL_FILE:CM-A-04S.STL
WHC/MPF CAMERA ASSEMBLY ANALYSIS JOB#: 86458-01 RUN ID: CM-A-04S

C O N T R O L D A T A

| | |
|---|---|
| EXECUTION MODE - - - - - - - - - - - - | 2 |
| CODE TYPE - - - - - - - - - - - - - - - | 1 (AISC 1989 ASD) |
| PRINT SUPPRESSION FLAG - - - - - - - - | 0 |
| OVERRIDE FLAG FOR UNITY K-FACTORS - - | 0 |
| TYPE OF UNITS - - - - - - - - - - - - - | E |
| INTERACTION STRESS RATIO CUTOFF - - - | 0.0005 |
| SHEAR STRESS RATIO CUTOFF - - - - - - | 0.0005 |



PAGE 2
SAP90 FILE:CM-A-04/SAPSTL_FILE:CM-A-04S.STL
WHC/MPF CAMERA ASSEMBLY ANALYSIS JOB#: 86458-01 RUN ID: CM-A-04S

L I V E L O A D

| LOAD | LIVE LOAD |
|---|---|
| 1 | N |
| 2 | N |
| 3 | N |
| 4 | N |

## L O A D  C O N D I T I O N  C O M B I N A T I O N  M U L T I P L I E R S

| COMBINATION | CONDITION | FACTOR |
|---|---|---|
| 1 | | |
| | 1 | 1.000 |
| 2 | | |
| | D | 1.000 |
| 3 | | |
| | 1 | 1.000 |
| | 2 | 1.000 |
| | D | 1.000 |
| 4 | | |
| | 1 | 1.000 |
| | 2 | -1.000 |
| | D | -1.000 |





## S E C T I O N  P R O P E R T Y  D A T A

| PROP ID | SECTION TYPE | DEPTH (in) | FLANGE WIDTH TOP (in) | FLANGE THICK TOP (in) | WEB THICK (in) | FLANGE WIDTH BOTTOM (in) | FLANGE THICK BOTTOM (in) |
|---|---|---|---|---|---|---|---|
| 1 | G | 0.000 | 0.000 | | | | |
| 2 | P | 1.660 | 1.660 | 0.140 | 0.140 | | |
| 3 | R | 1.000 | 0.250 | | | | |
| 4 | R | 1.000 | 0.375 | | | | |
| 5 | G | 0.000 | 0.000 | | | | |
| 6 | P | 0.675 | 0.675 | 0.150 | 0.150 | | |
| 7 | G | 0.000 | 0.000 | | | | |

PAGE 5
SAP90_FILE:CM-A-04/SAPSTL_FILE:CM-A-04S.STL
WHC/MPF CAMERA ASSEMBLY ANALYSIS JOB#: 66458-01 RUN ID: CM-A-04S

S E C T I O N  P R O P E R T Y  D A T A

| PROP ID | SEC TYP | AREA (in_2) | MOMENTS OF INERTIA I33 (in_4) | I22 (in_4) | SHEAR AREAS A2 (in_2) | A3 (in_2) |
|---|---|---|---|---|---|---|
| 1 | G | 0.9000E+10 | 0.90000E+10 | 0.90000E+10 | 0.9000E+10 | 0.9000E+10 |
| 2 | P | 0.6685E+00 | 0.19471E+00 | 0.19471E+00 | 0.3343E+00 | 0.3343E+00 |
| 3 | R | 0.2500E+00 | 0.20833E-01 | 0.13021E-02 | 0.2083E+00 | 0.2083E+00 |
| 4 | R | 0.3750E+00 | 0.31250E-01 | 0.43945E-02 | 0.3125E+00 | 0.3125E+00 |
| 5 | G | 0.9000E+05 | 0.90000E+07 | 0.90000E+07 | 0.9000E+07 | 0.9000E+07 |
| 6 | P | 0.2474E+00 | 0.92195E-02 | 0.92195E-02 | 0.1237E+00 | 0.1237E+00 |
| 7 | G | 0.9000E+06 | 0.90000E+08 | 0.90000E+08 | 0.9000E+06 | 0.9000E+06 |



PAGE 6
SAP90_FILE:CM-A-04/SAPSTL_FILE:CM-A-04S.STL
WHC/MPF CAMERA ASSEMBLY ANALYSIS JOB#: 66458-01 RUN ID: CM-A-04S

S E C T I O N  P R O P E R T Y  D A T A

| PROP ID | SEC TYP | SECTION MODULI S33 (in_3) | S22 (in_3) | PLASTIC MODULI Z33 (in_3) | Z22 (in_3) | RADII OF GYRATION R33 (in) | R22 (in) |
|---|---|---|---|---|---|---|---|
| 1 | G | 0.0000E+00 | 0.0000E+00 | 0.0000E+00 | 0.0000E+00 | 0.000 | 0.000 |
| 2 | P | 0.2346E+00 | 0.2346E+00 | 0.3244E+00 | 0.3244E+00 | 0.540 | 0.540 |
| 3 | R | 0.4167E-01 | 0.1042E-01 | 0.6250E-01 | 0.1563E-01 | 0.289 | 0.072 |
| 4 | R | 0.6250E-01 | 0.2344E-01 | 0.9375E-01 | 0.3516E-01 | 0.289 | 0.108 |
| 5 | G | 0.0000E+00 | 0.0000E+00 | 0.0000E+00 | 0.0000E+00 | 0.000 | 0.000 |
| 6 | P | 0.2732E-01 | 0.2732E-01 | 0.4247E-01 | 0.4247E-01 | 0.193 | 0.193 |
| 7 | G | 0.0000E+00 | 0.0000E+00 | 0.0000E+00 | 0.0000E+00 | 0.000 | 0.000 |

PAGE 7
SAP90 FILE:CM-A-04/SAPSTL_FILE:CM-A-04S.STL
WHC/MPF CAMERA ASSEMBLY ANALYSIS JOB#: 66458-01 RUN ID: CM-A-04S

## MATERIAL PROPERTY DATA

| PROP ID | MAT TYP | MODULUS E (Ksi) | YIELD FY (Ksi) | BENDING FB33 (Ksi) | BENDING FB22 (Ksi) | AXIAL FA(C) (Ksi) | AXIAL FA(T) (Ksi) | SHEAR FV (Ksi) |
|---|---|---|---|---|---|---|---|---|
| 1 | N | 0.100E+01 | 0.360E+02 | | | | | |
| 2 | S | 0.290E+05 | 0.300E+02 | 0.317E+02 | 0.360E+02 | 0.129E+02 | 0.288E+02 | 0.168E+02 |
| 3 | S | 0.290E+05 | 0.250E+02 | 0.264E+02 | 0.300E+02 | 0.353E+01 | 0.180E+02 | 0.160E+02 |
| 4 | S | 0.290E+05 | 0.250E+02 | 0.264E+02 | 0.300E+02 | 0.767E+01 | 0.180E+02 | 0.160E+02 |
| 5 | N | 0.100E+01 | 0.360E+02 | | | | | |
| 6 | S | 0.290E+05 | 0.250E+02 | 0.264E+02 | 0.300E+02 | 0.143E+02 | 0.180E+02 | 0.160E+02 |
| 7 | N | 0.100E+01 | 0.360E+02 | | | | | |



PAGE 8
SAP90 FILE:CM-A-04/SAPSTL_FILE:CM-A-04S.STL
WHC/MPF CAMERA ASSEMBLY ANALYSIS JOB#: 66458-01 RUN ID: CM-A-04S

## FRAME ELEMENT DESIGN DATA

| ELT ID | ELT TYPE | PROP ID | FACTOR K33 | FACTOR K22 | FACTOR FOR L33 | FACTOR FOR L22 | COEFF CM33 | COEFF CM22 | COEFF CB | FACTOR FOR LL |
|---|---|---|---|---|---|---|---|---|---|---|
| 101 | 1 | 1 | 1.000 | 1.000 | 1.000 | 1.000 | 0.00 | 0.00 | 0.00 | 1.00 |
| 102 | 1 | 1 | 1.000 | 1.000 | 1.000 | 1.000 | 0.00 | 0.00 | 0.00 | 1.00 |
| 103 | 1 | 1 | 1.000 | 1.000 | 1.000 | 1.000 | 0.00 | 0.00 | 0.00 | 1.00 |
| 104 | 1 | 1 | 1.000 | 1.000 | 1.000 | 1.000 | 0.00 | 0.00 | 0.00 | 1.00 |
| 105 | 1 | 1 | 1.000 | 1.000 | 1.000 | 1.000 | 0.00 | 0.00 | 0.00 | 1.00 |
| 106 | 1 | 1 | 1.000 | 1.000 | 1.000 | 1.000 | 0.00 | 0.00 | 0.00 | 1.00 |
| 107 | 1 | 1 | 1.000 | 1.000 | 1.000 | 1.000 | 0.00 | 0.00 | 0.00 | 1.00 |
| 108 | 1 | 1 | 1.000 | 1.000 | 1.000 | 1.000 | 0.00 | 0.00 | 0.00 | 1.00 |
| 109 | 1 | 1 | 1.000 | 1.000 | 1.000 | 1.000 | 0.00 | 0.00 | 0.00 | 1.00 |
| 110 | 1 | 1 | 1.000 | 1.000 | 1.000 | 1.000 | 0.00 | 0.00 | 0.00 | 1.00 |
| 111 | 1 | 1 | 1.000 | 1.000 | 1.000 | 1.000 | 0.00 | 0.00 | 0.00 | 1.00 |
| 112 | 1 | 1 | 1.000 | 1.000 | 1.000 | 1.000 | 0.00 | 0.00 | 0.00 | 1.00 |
| 113 | 1 | 1 | 1.000 | 1.000 | 1.000 | 1.000 | 0.00 | 0.00 | 0.00 | 1.00 |
| 114 | 1 | 1 | 1.000 | 1.000 | 1.000 | 1.000 | 0.00 | 0.00 | 0.00 | 1.00 |
| 115 | 1 | 1 | 1.000 | 1.000 | 1.000 | 1.000 | 0.00 | 0.00 | 0.00 | 1.00 |
| 116 | 1 | 1 | 1.000 | 1.000 | 1.000 | 1.000 | 0.00 | 0.00 | 0.00 | 1.00 |
| 117 | 1 | 1 | 1.000 | 1.000 | 1.000 | 1.000 | 0.00 | 0.00 | 0.00 | 1.00 |
| 118 | 1 | 1 | 1.000 | 1.000 | 1.000 | 1.000 | 0.00 | 0.00 | 0.00 | 1.00 |
| 119 | 1 | 1 | 1.000 | 1.000 | 1.000 | 1.000 | 0.00 | 0.00 | 0.00 | 1.00 |
| 120 | 1 | 1 | 1.000 | 1.000 | 1.000 | 1.000 | 0.00 | 0.00 | 0.00 | 1.00 |
| 201 | 1 | 2 | 2.000 | 2.000 | 1.000 | 1.000 | 0.85 | 0.85 | 0.00 | 1.00 |
| 202 | 1 | 2 | 2.000 | 2.000 | 1.000 | 1.000 | 0.85 | 0.85 | 0.00 | 1.00 |
| 203 | 1 | 2 | 2.000 | 2.000 | 1.000 | 1.000 | 0.85 | 0.85 | 0.00 | 1.00 |
| 204 | 1 | 2 | 2.000 | 2.000 | 1.000 | 1.000 | 0.85 | 0.85 | 0.00 | 1.00 |
| 205 | 1 | 2 | 2.000 | 2.000 | 1.000 | 1.000 | 0.85 | 0.85 | 0.00 | 1.00 |
| 206 | 1 | 2 | 2.000 | 2.000 | 1.000 | 1.000 | 0.85 | 0.85 | 0.00 | 1.00 |
| 207 | 1 | 2 | 2.000 | 2.000 | 1.000 | 1.000 | 0.85 | 0.85 | 0.00 | 1.00 |
| 208 | 1 | 2 | 2.000 | 2.000 | 1.000 | 1.000 | 0.85 | 0.85 | 0.00 | 1.00 |
| 209 | 1 | 2 | 2.000 | 2.000 | 1.000 | 1.000 | 0.85 | 0.85 | 0.00 | 1.00 |
| 210 | 1 | 2 | 2.000 | 2.000 | 1.000 | 1.000 | 0.85 | 0.85 | 0.00 | 1.00 |
| 211 | 1 | 2 | 2.000 | 2.000 | 1.000 | 1.000 | 0.85 | 0.85 | 0.00 | 1.00 |
| 212 | 1 | 2 | 2.000 | 2.000 | 1.000 | 1.000 | 0.85 | 0.85 | 0.00 | 1.00 |
| 213 | 1 | 2 | 2.000 | 2.000 | 1.000 | 1.000 | 0.85 | 0.85 | 0.00 | 1.00 |
| 214 | 1 | 2 | 2.000 | 2.000 | 1.000 | 1.000 | 0.85 | 0.85 | 0.00 | 1.00 |
| 215 | 1 | 2 | 2.000 | 2.000 | 1.000 | 1.000 | 0.85 | 0.85 | 0.00 | 1.00 |
| 216 | 1 | 2 | 2.000 | 2.000 | 1.000 | 1.000 | 0.85 | 0.85 | 0.00 | 1.00 |
| 217 | 1 | 2 | 2.000 | 2.000 | 1.000 | 1.000 | 0.85 | 0.85 | 0.00 | 1.00 |
| 218 | 1 | 2 | 2.000 | 2.000 | 1.000 | 1.000 | 0.85 | 0.85 | 0.00 | 1.00 |
| 219 | 1 | 2 | 2.000 | 2.000 | 1.000 | 1.000 | 0.85 | 0.85 | 0.00 | 1.00 |
| 220 | 1 | 2 | 2.000 | 2.000 | 1.000 | 1.000 | 0.85 | 0.85 | 0.00 | 1.00 |
| 221 | 1 | 2 | 2.000 | 2.000 | 1.000 | 1.000 | 0.85 | 0.85 | 0.00 | 1.00 |
| 222 | 1 | 2 | 2.000 | 2.000 | 1.000 | 1.000 | 0.85 | 0.85 | 0.00 | 1.00 |
| 223 | 1 | 2 | 2.000 | 2.000 | 1.000 | 1.000 | 0.85 | 0.85 | 0.00 | 1.00 |
| 224 | 1 | 2 | 2.000 | 2.000 | 1.000 | 1.000 | 0.85 | 0.85 | 0.00 | 1.00 |
| 225 | 1 | 2 | 2.000 | 2.000 | 1.000 | 1.000 | 0.85 | 0.85 | 0.00 | 1.00 |
| 226 | 1 | 2 | 2.000 | 2.000 | 1.000 | 1.000 | 0.85 | 0.85 | 0.00 | 1.00 |
| 227 | 1 | 2 | 2.000 | 2.000 | 1.000 | 1.000 | 0.85 | 0.85 | 0.00 | 1.00 |
| 228 | 1 | 2 | 2.000 | 2.000 | 1.000 | 1.000 | 0.85 | 0.85 | 0.00 | 1.00 |
| 229 | 1 | 2 | 2.000 | 2.000 | 1.000 | 1.000 | 0.85 | 0.85 | 0.00 | 1.00 |
| 230 | 1 | 2 | 2.000 | 2.000 | 1.000 | 1.000 | 0.85 | 0.85 | 0.00 | 1.00 |
| 231 | 1 | 2 | 2.000 | 2.000 | 1.000 | 1.000 | 0.85 | 0.85 | 0.00 | 1.00 |

PAGE 9
SAP90 FILE:CM-A-04/SAPSTL_FILE:CM-A-04S.STL
WHC/MPF CAMERA ASSEMBLY ANALYSIS JOB#: 86458-01 RUN ID: CM-A-04S

F R A M E  E L E M E N T  D E S I G N  D A T A

| ELT ID | ELT TYPE | PROP ID | FACTOR K33 | FACTOR K22 | FACTOR FOR L33 | FACTOR FOR L22 | COEFF CM33 | COEFF CM22 | COEFF CB | FACTOR FOR LL |
|---|---|---|---|---|---|---|---|---|---|---|
| 232 | 1 | 2 | 2.000 | 2.000 | 1.000 | 1.000 | 0.85 | 0.85 | 0.00 | 1.00 |
| 233 | 1 | 2 | 2.000 | 2.000 | 1.000 | 1.000 | 0.85 | 0.85 | 0.00 | 1.00 |
| 234 | 1 | 2 | 2.000 | 2.000 | 1.000 | 1.000 | 0.85 | 0.85 | 0.00 | 1.00 |
| 235 | 1 | 2 | 2.000 | 2.000 | 1.000 | 1.000 | 0.85 | 0.85 | 0.00 | 1.00 |
| 236 | 1 | 2 | 2.000 | 2.000 | 1.000 | 1.000 | 0.85 | 0.85 | 0.00 | 1.00 |
| 237 | 1 | 2 | 2.000 | 2.000 | 1.000 | 1.000 | 0.85 | 0.85 | 0.00 | 1.00 |
| 238 | 1 | 2 | 2.000 | 2.000 | 1.000 | 1.000 | 0.85 | 0.85 | 0.00 | 1.00 |
| 239 | 1 | 2 | 2.000 | 2.000 | 1.000 | 1.000 | 0.85 | 0.85 | 0.00 | 1.00 |
| 240 | 1 | 2 | 2.000 | 2.000 | 1.000 | 1.000 | 0.85 | 0.85 | 0.00 | 1.00 |
| 241 | 1 | 2 | 2.000 | 2.000 | 1.000 | 1.000 | 0.85 | 0.85 | 0.00 | 1.00 |
| 242 | 1 | 2 | 2.000 | 2.000 | 1.000 | 1.000 | 0.85 | 0.85 | 0.00 | 1.00 |
| 243 | 1 | 2 | 2.000 | 2.000 | 1.000 | 1.000 | 0.85 | 0.85 | 0.00 | 1.00 |
| 244 | 1 | 2 | 2.000 | 2.000 | 1.000 | 1.000 | 0.85 | 0.85 | 0.00 | 1.00 |
| 245 | 1 | 2 | 2.000 | 2.000 | 1.000 | 1.000 | 0.85 | 0.85 | 0.00 | 1.00 |
| 246 | 1 | 2 | 2.000 | 2.000 | 1.000 | 1.000 | 0.85 | 0.85 | 0.00 | 1.00 |
| 247 | 1 | 2 | 2.000 | 2.000 | 1.000 | 1.000 | 0.85 | 0.85 | 0.00 | 1.00 |
| 248 | 1 | 2 | 2.000 | 2.000 | 1.000 | 1.000 | 0.85 | 0.85 | 0.00 | 1.00 |
| 249 | 1 | 2 | 2.000 | 2.000 | 1.000 | 1.000 | 0.85 | 0.85 | 0.00 | 1.00 |
| 250 | 1 | 2 | 2.000 | 2.000 | 1.000 | 1.000 | 0.85 | 0.85 | 0.00 | 1.00 |
| 251 | 1 | 2 | 2.000 | 2.000 | 1.000 | 1.000 | 0.85 | 0.85 | 0.00 | 1.00 |
| 252 | 1 | 2 | 2.000 | 2.000 | 1.000 | 1.000 | 0.85 | 0.85 | 0.00 | 1.00 |
| 253 | 1 | 2 | 2.000 | 2.000 | 1.000 | 1.000 | 0.85 | 0.85 | 0.00 | 1.00 |
| 254 | 1 | 2 | 2.000 | 2.000 | 1.000 | 1.000 | 0.85 | 0.85 | 0.00 | 1.00 |
| 255 | 1 | 2 | 2.000 | 2.000 | 1.000 | 1.000 | 0.85 | 0.85 | 0.00 | 1.00 |
| 256 | 1 | 2 | 2.000 | 2.000 | 1.000 | 1.000 | 0.85 | 0.85 | 0.00 | 1.00 |
| 257 | 1 | 2 | 2.000 | 2.000 | 1.000 | 1.000 | 0.85 | 0.85 | 0.00 | 1.00 |
| 258 | 1 | 2 | 2.000 | 2.000 | 1.000 | 1.000 | 0.85 | 0.85 | 0.00 | 1.00 |
| 259 | 1 | 2 | 2.000 | 2.000 | 1.000 | 1.000 | 0.85 | 0.85 | 0.00 | 1.00 |
| 260 | 1 | 2 | 2.000 | 2.000 | 1.000 | 1.000 | 0.85 | 0.85 | 0.00 | 1.00 |
| 261 | 1 | 2 | 2.000 | 2.000 | 1.000 | 1.000 | 0.85 | 0.85 | 0.00 | 1.00 |
| 262 | 1 | 2 | 2.000 | 2.000 | 1.000 | 1.000 | 0.85 | 0.85 | 0.00 | 1.00 |
| 263 | 1 | 2 | 2.000 | 2.000 | 1.000 | 1.000 | 0.85 | 0.85 | 0.00 | 1.00 |
| 264 | 1 | 2 | 2.000 | 2.000 | 1.000 | 1.000 | 0.85 | 0.85 | 0.00 | 1.00 |
| 265 | 1 | 2 | 2.000 | 2.000 | 1.000 | 1.000 | 0.85 | 0.85 | 0.00 | 1.00 |
| 266 | 1 | 2 | 2.000 | 2.000 | 1.000 | 1.000 | 0.85 | 0.85 | 0.00 | 1.00 |
| 267 | 1 | 2 | 2.000 | 2.000 | 1.000 | 1.000 | 0.85 | 0.85 | 0.00 | 1.00 |
| 268 | 1 | 2 | 2.000 | 2.000 | 1.000 | 1.000 | 0.85 | 0.85 | 0.00 | 1.00 |
| 301 | 1 | 5 | 1.000 | 1.000 | 1.000 | 1.000 | 0.00 | 0.00 | 0.00 | 1.00 |
| 302 | 1 | 5 | 1.000 | 1.000 | 1.000 | 1.000 | 0.00 | 0.00 | 0.00 | 1.00 |
| 303 | 1 | 5 | 1.000 | 1.000 | 1.000 | 1.000 | 0.00 | 0.00 | 0.00 | 1.00 |
| 304 | 1 | 5 | 1.000 | 1.000 | 1.000 | 1.000 | 0.00 | 0.00 | 0.00 | 1.00 |
| 305 | 1 | 5 | 1.000 | 1.000 | 1.000 | 1.000 | 0.00 | 0.00 | 0.00 | 1.00 |
| 306 | 1 | 5 | 1.000 | 1.000 | 1.000 | 1.000 | 0.00 | 0.00 | 0.00 | 1.00 |
| 307 | 1 | 5 | 1.000 | 1.000 | 1.000 | 1.000 | 0.00 | 0.00 | 0.00 | 1.00 |
| 308 | 1 | 5 | 1.000 | 1.000 | 1.000 | 1.000 | 0.00 | 0.00 | 0.00 | 1.00 |
| 309 | 1 | 5 | 1.000 | 1.000 | 1.000 | 1.000 | 0.00 | 0.00 | 0.00 | 1.00 |
| 310 | 1 | 5 | 1.000 | 1.000 | 1.000 | 1.000 | 0.00 | 0.00 | 0.00 | 1.00 |
| 311 | 1 | 5 | 1.000 | 1.000 | 1.000 | 1.000 | 0.00 | 0.00 | 0.00 | 1.00 |
| 312 | 1 | 5 | 1.000 | 1.000 | 1.000 | 1.000 | 0.00 | 0.00 | 0.00 | 1.00 |
| 313 | 1 | 5 | 1.000 | 1.000 | 1.000 | 1.000 | 0.00 | 0.00 | 0.00 | 1.00 |
| 314 | 1 | 5 | 1.000 | 1.000 | 1.000 | 1.000 | 0.00 | 0.00 | 0.00 | 1.00 |



PAGE 10
SAP90 FILE:CM-A-04/SAPSTL_FILE:CM-A-04S.STL
WHC/MPF CAMERA ASSEMBLY ANALYSIS JOB#: 86458-01 RUN ID: CM-A-04S

F R A M E  E L E M E N T  D E S I G N  D A T A

| ELT ID | ELT TYPE | PROP ID | FACTOR K33 | FACTOR K22 | FACTOR FOR L33 | FACTOR FOR L22 | COEFF CM33 | COEFF CM22 | COEFF CB | FACTOR FOR LL |
|---|---|---|---|---|---|---|---|---|---|---|
| 315 | 1 | 5 | 1.000 | 1.000 | 1.000 | 1.000 | 0.00 | 0.00 | 0.00 | 1.00 |
| 316 | 1 | 5 | 1.000 | 1.000 | 1.000 | 1.000 | 0.00 | 0.00 | 0.00 | 1.00 |
| 317 | 1 | 5 | 1.000 | 1.000 | 1.000 | 1.000 | 0.00 | 0.00 | 0.00 | 1.00 |
| 318 | 1 | 5 | 1.000 | 1.000 | 1.000 | 1.000 | 0.00 | 0.00 | 0.00 | 1.00 |
| 319 | 1 | 5 | 1.000 | 1.000 | 1.000 | 1.000 | 0.00 | 0.00 | 0.00 | 1.00 |
| 320 | 1 | 5 | 1.000 | 1.000 | 1.000 | 1.000 | 0.00 | 0.00 | 0.00 | 1.00 |
| 321 | 1 | 5 | 1.000 | 1.000 | 1.000 | 1.000 | 0.00 | 0.00 | 0.00 | 1.00 |
| 322 | 1 | 5 | 1.000 | 1.000 | 1.000 | 1.000 | 0.00 | 0.00 | 0.00 | 1.00 |
| 323 | 1 | 5 | 1.000 | 1.000 | 1.000 | 1.000 | 0.00 | 0.00 | 0.00 | 1.00 |
| 324 | 1 | 5 | 1.000 | 1.000 | 1.000 | 1.000 | 0.00 | 0.00 | 0.00 | 1.00 |
| 325 | 1 | 5 | 1.000 | 1.000 | 1.000 | 1.000 | 0.00 | 0.00 | 0.00 | 1.00 |
| 326 | 1 | 5 | 1.000 | 1.000 | 1.000 | 1.000 | 0.00 | 0.00 | 0.00 | 1.00 |
| 327 | 1 | 5 | 1.000 | 1.000 | 1.000 | 1.000 | 0.00 | 0.00 | 0.00 | 1.00 |
| 328 | 1 | 5 | 1.000 | 1.000 | 1.000 | 1.000 | 0.00 | 0.00 | 0.00 | 1.00 |
| 329 | 1 | 5 | 1.000 | 1.000 | 1.000 | 1.000 | 0.00 | 0.00 | 0.00 | 1.00 |
| 330 | 1 | 5 | 1.000 | 1.000 | 1.000 | 1.000 | 0.00 | 0.00 | 0.00 | 1.00 |
| 331 | 1 | 5 | 1.000 | 1.000 | 1.000 | 1.000 | 0.00 | 0.00 | 0.00 | 1.00 |
| 332 | 1 | 5 | 1.000 | 1.000 | 1.000 | 1.000 | 0.00 | 0.00 | 0.00 | 1.00 |
| 333 | 1 | 5 | 1.000 | 1.000 | 1.000 | 1.000 | 0.00 | 0.00 | 0.00 | 1.00 |
| 334 | 1 | 5 | 1.000 | 1.000 | 1.000 | 1.000 | 0.00 | 0.00 | 0.00 | 1.00 |
| 335 | 1 | 5 | 1.000 | 1.000 | 1.000 | 1.000 | 0.00 | 0.00 | 0.00 | 1.00 |
| 336 | 1 | 5 | 1.000 | 1.000 | 1.000 | 1.000 | 0.00 | 0.00 | 0.00 | 1.00 |
| 337 | 1 | 5 | 1.000 | 1.000 | 1.000 | 1.000 | 0.00 | 0.00 | 0.00 | 1.00 |
| 338 | 1 | 5 | 1.000 | 1.000 | 1.000 | 1.000 | 0.00 | 0.00 | 0.00 | 1.00 |
| 339 | 1 | 5 | 1.000 | 1.000 | 1.000 | 1.000 | 0.00 | 0.00 | 0.00 | 1.00 |
| 340 | 1 | 5 | 1.000 | 1.000 | 1.000 | 1.000 | 0.00 | 0.00 | 0.00 | 1.00 |
| 401 | 1 | 3 | 1.000 | 1.000 | 1.000 | 1.000 | 0.85 | 0.85 | 0.00 | 1.00 |
| 402 | 1 | 3 | 1.000 | 1.000 | 1.000 | 1.000 | 0.85 | 0.85 | 0.00 | 1.00 |
| 403 | 1 | 3 | 1.000 | 1.000 | 1.000 | 1.000 | 0.85 | 0.85 | 0.00 | 1.00 |
| 404 | 1 | 3 | 1.000 | 1.000 | 1.000 | 1.000 | 0.85 | 0.85 | 0.00 | 1.00 |
| 405 | 1 | 3 | 1.000 | 1.000 | 1.000 | 1.000 | 0.85 | 0.85 | 0.00 | 1.00 |
| 406 | 1 | 3 | 1.000 | 1.000 | 1.000 | 1.000 | 0.85 | 0.85 | 0.00 | 1.00 |
| 407 | 1 | 3 | 1.000 | 1.000 | 1.000 | 1.000 | 0.85 | 0.85 | 0.00 | 1.00 |
| 408 | 1 | 3 | 1.000 | 1.000 | 1.000 | 1.000 | 0.85 | 0.85 | 0.00 | 1.00 |
| 409 | 1 | 3 | 1.000 | 1.000 | 1.000 | 1.000 | 0.85 | 0.85 | 0.00 | 1.00 |
| 410 | 1 | 3 | 1.000 | 1.000 | 1.000 | 1.000 | 0.85 | 0.85 | 0.00 | 1.00 |
| 411 | 1 | 3 | 1.000 | 1.000 | 1.000 | 1.000 | 0.85 | 0.85 | 0.00 | 1.00 |
| 412 | 1 | 3 | 1.000 | 1.000 | 1.000 | 1.000 | 0.85 | 0.85 | 0.00 | 1.00 |
| 413 | 1 | 3 | 1.000 | 1.000 | 1.000 | 1.000 | 0.85 | 0.85 | 0.00 | 1.00 |
| 414 | 1 | 3 | 1.000 | 1.000 | 1.000 | 1.000 | 0.85 | 0.85 | 0.00 | 1.00 |
| 415 | 1 | 3 | 1.000 | 1.000 | 1.000 | 1.000 | 0.85 | 0.85 | 0.00 | 1.00 |
| 416 | 1 | 3 | 1.000 | 1.000 | 1.000 | 1.000 | 0.85 | 0.85 | 0.00 | 1.00 |
| 417 | 1 | 3 | 1.000 | 1.000 | 1.000 | 1.000 | 0.85 | 0.85 | 0.00 | 1.00 |
| 418 | 1 | 3 | 1.000 | 1.000 | 1.000 | 1.000 | 0.85 | 0.85 | 0.00 | 1.00 |
| 419 | 1 | 3 | 1.000 | 1.000 | 1.000 | 1.000 | 0.85 | 0.85 | 0.00 | 1.00 |
| 420 | 1 | 3 | 1.000 | 1.000 | 1.000 | 1.000 | 0.85 | 0.85 | 0.00 | 1.00 |
| 501 | 1 | 4 | 1.000 | 1.000 | 1.000 | 1.000 | 0.85 | 0.85 | 0.00 | 1.00 |
| 502 | 1 | 4 | 1.000 | 1.000 | 1.000 | 1.000 | 0.85 | 0.85 | 0.00 | 1.00 |
| 503 | 1 | 4 | 1.000 | 1.000 | 1.000 | 1.000 | 0.85 | 0.85 | 0.00 | 1.00 |
| 504 | 1 | 6 | 1.000 | 1.000 | 1.000 | 1.000 | 0.85 | 0.85 | 0.00 | 1.00 |
| 505 | 1 | 6 | 1.000 | 1.000 | 1.000 | 1.000 | 0.85 | 0.85 | 0.00 | 1.00 |

F R A M E  E L E M E N T  D E S I G N  D A T A

| ELT ID | ELT TYPE | PROP ID | FACTOR K33 | FACTOR K22 | FACTOR FOR L33 | FACTOR FOR L22 | COEFF CM33 | COEFF CM22 | COEFF CB | FACTOR FOR LL |
|---|---|---|---|---|---|---|---|---|---|---|
| 601 | 1 | 7 | 1.000 | 1.000 | 1.000 | 1.000 | 0.00 | 0.00 | 0.00 | 1.00 |
| 602 | 1 | 7 | 1.000 | 1.000 | 1.000 | 1.000 | 0.00 | 0.00 | 0.00 | 1.00 |
| 603 | 1 | 7 | 1.000 | 1.000 | 1.000 | 1.000 | 0.00 | 0.00 | 0.00 | 1.00 |
| 604 | 1 | 7 | 1.000 | 1.000 | 1.000 | 1.000 | 0.00 | 0.00 | 0.00 | 1.00 |







S A P 9 0  F R A M E  E L E M E N T  D A T A

| ELT ID | JOINT END-I | JOINT END-J | ELEMENT LENGTH (in) |
|---|---|---|---|
| 101 | 299 | 201 | 12.500 |
| 102 | 299 | 202 | 12.500 |
| 103 | 299 | 203 | 12.500 |
| 104 | 299 | 204 | 12.500 |
| 105 | 299 | 205 | 12.500 |
| 106 | 299 | 206 | 12.500 |
| 107 | 299 | 207 | 12.500 |
| 108 | 299 | 208 | 12.500 |
| 109 | 299 | 209 | 12.500 |
| 110 | 299 | 210 | 12.500 |
| 111 | 299 | 211 | 12.500 |
| 112 | 299 | 212 | 12.500 |
| 113 | 299 | 213 | 12.500 |
| 114 | 299 | 214 | 12.500 |
| 115 | 299 | 215 | 12.500 |
| 116 | 299 | 216 | 12.500 |
| 117 | 299 | 217 | 12.500 |
| 118 | 299 | 218 | 12.500 |
| 119 | 299 | 219 | 12.500 |
| 120 | 299 | 220 | 12.500 |
| 201 | 181 | 301 | 12.875 |
| 202 | 141 | 302 | 12.875 |
| 203 | 145 | 303 | 12.875 |
| 204 | 185 | 304 | 12.875 |
| 205 | 301 | 401 | 10.107 |
| 206 | 302 | 402 | 10.107 |
| 207 | 303 | 403 | 10.107 |
| 208 | 304 | 404 | 10.107 |
| 209 | 401 | 501 | 13.893 |
| 210 | 402 | 502 | 13.893 |
| 211 | 403 | 503 | 13.893 |
| 212 | 404 | 504 | 13.893 |
| 213 | 401 | 501 | 13.893 |
| 214 | 402 | 502 | 13.893 |
| 215 | 403 | 503 | 13.893 |
| 216 | 404 | 504 | 13.893 |
| 217 | 501 | 601 | 10.107 |
| 218 | 502 | 602 | 10.107 |
| 219 | 503 | 603 | 10.107 |
| 220 | 504 | 604 | 10.107 |
| 221 | 601 | 701 | 13.893 |
| 222 | 602 | 702 | 13.893 |
| 223 | 603 | 703 | 13.893 |
| 224 | 604 | 704 | 13.893 |
| 225 | 701 | 801 | 10.107 |
| 226 | 702 | 802 | 10.107 |
| 227 | 703 | 803 | 10.107 |
| 228 | 704 | 804 | 10.107 |
| 229 | 801 | 901 | 13.893 |
| 230 | 802 | 902 | 13.893 |

PAGE 13
SAP90 FILE:CM-A-04/SAPSTL_FILE:CM-A-04S.STL
WHC/MPF CAMERA ASSEMBLY ANALYSIS JOB#: 86458-01 RUN ID: CM-A-04S

S A P 9 0 F R A M E E L E M E N T D A T A

| ELT ID | JOINT END-I | JOINT END-J | ELEMENT LENGTH (in) |
|---|---|---|---|
| 231 | 803 | 903 | 13.893 |
| 232 | 804 | 904 | 13.893 |
| 233 | 901 | 1001 | 10.107 |
| 234 | 902 | 1002 | 10.107 |
| 235 | 903 | 1003 | 10.107 |
| 236 | 904 | 1004 | 10.107 |
| 237 | 1001 | 1101 | 13.143 |
| 238 | 1002 | 1102 | 13.143 |
| 239 | 1003 | 1103 | 13.143 |
| 240 | 1004 | 1104 | 13.143 |
| 241 | 1101 | 1201 | 11.250 |
| 242 | 1102 | 1202 | 11.250 |
| 243 | 1103 | 1203 | 11.250 |
| 244 | 1104 | 1204 | 11.250 |
| 245 | 1201 | 1301 | 10.107 |
| 246 | 1202 | 1302 | 10.107 |
| 247 | 1203 | 1303 | 10.107 |
| 248 | 1204 | 1304 | 10.107 |
| 249 | 1301 | 1401 | 11.601 |
| 250 | 1302 | 1402 | 11.601 |
| 251 | 1303 | 1403 | 11.601 |
| 252 | 1304 | 1404 | 11.601 |
| 253 | 1401 | 1501 | 17.000 |
| 254 | 1402 | 1502 | 17.000 |
| 255 | 1403 | 1503 | 17.000 |
| 256 | 1404 | 1504 | 17.000 |
| 257 | 1501 | 1601 | 17.000 |
| 258 | 1502 | 1602 | 17.000 |
| 259 | 1503 | 1603 | 17.000 |
| 260 | 1504 | 1604 | 17.000 |
| 261 | 1601 | 1701 | 16.892 |
| 262 | 1602 | 1702 | 16.892 |
| 263 | 1603 | 1703 | 16.892 |
| 264 | 1604 | 1704 | 16.892 |
| 265 | 1701 | 1801 | 2.250 |
| 266 | 1702 | 1802 | 2.250 |
| 267 | 1703 | 1803 | 2.250 |
| 268 | 1704 | 1804 | 2.250 |
| 301 | 301 | 311 | 0.941 |
| 302 | 302 | 312 | 0.941 |
| 303 | 303 | 313 | 0.941 |
| 304 | 304 | 314 | 0.941 |
| 305 | 401 | 411 | 0.941 |
| 306 | 402 | 412 | 0.941 |
| 307 | 403 | 413 | 0.941 |
| 308 | 404 | 414 | 0.941 |
| 309 | 501 | 511 | 0.941 |
| 310 | 502 | 512 | 0.941 |
| 311 | 503 | 513 | 0.941 |
| 312 | 504 | 514 | 0.941 |



PAGE 14
SAP90 FILE:CM-A-04/SAPSTL_FILE:CM-A-04S.STL
WHC/MPF CAMERA ASSEMBLY ANALYSIS JOB#: 86458-01 RUN ID: CM-A-04S

S A P 9 0 F R A M E E L E M E N T D A T A

| ELT ID | JOINT END-I | JOINT END-J | ELEMENT LENGTH (in) |
|---|---|---|---|
| 313 | 601 | 611 | 0.941 |
| 314 | 602 | 612 | 0.941 |
| 315 | 603 | 613 | 0.941 |
| 316 | 604 | 614 | 0.941 |
| 317 | 701 | 711 | 0.941 |
| 318 | 702 | 712 | 0.941 |
| 319 | 703 | 713 | 0.941 |
| 320 | 704 | 714 | 0.941 |
| 321 | 801 | 811 | 0.941 |
| 322 | 802 | 812 | 0.941 |
| 323 | 803 | 813 | 0.941 |
| 324 | 804 | 814 | 0.941 |
| 325 | 901 | 911 | 0.941 |
| 326 | 902 | 912 | 0.941 |
| 327 | 903 | 913 | 0.941 |
| 328 | 904 | 914 | 0.941 |
| 329 | 1001 | 1011 | 0.941 |
| 330 | 1002 | 1012 | 0.941 |
| 331 | 1003 | 1013 | 0.941 |
| 332 | 1004 | 1014 | 0.941 |
| 333 | 1201 | 1211 | 0.941 |
| 334 | 1202 | 1212 | 0.941 |
| 335 | 1203 | 1213 | 0.941 |
| 336 | 1204 | 1214 | 0.941 |
| 337 | 1301 | 1311 | 0.941 |
| 338 | 1302 | 1312 | 0.941 |
| 339 | 1303 | 1313 | 0.941 |
| 340 | 1304 | 1314 | 0.941 |
| 401 | 411 | 314 | 14.096 |
| 402 | 412 | 311 | 14.096 |
| 403 | 413 | 312 | 14.096 |
| 404 | 414 | 313 | 14.096 |
| 405 | 611 | 514 | 14.096 |
| 406 | 612 | 511 | 14.096 |
| 407 | 613 | 512 | 14.096 |
| 408 | 614 | 513 | 14.096 |
| 409 | 811 | 714 | 14.096 |
| 410 | 812 | 711 | 14.096 |
| 411 | 813 | 712 | 14.096 |
| 412 | 814 | 713 | 14.096 |
| 413 | 1011 | 914 | 14.096 |
| 414 | 1012 | 911 | 14.096 |
| 415 | 1013 | 912 | 14.096 |
| 416 | 1014 | 913 | 14.096 |
| 417 | 1311 | 1214 | 14.096 |
| 418 | 1312 | 1211 | 14.096 |
| 419 | 1313 | 1212 | 14.096 |
| 420 | 1314 | 1213 | 14.096 |
| 501 | 1401 | 1403 | 15.556 |
| 502 | 1501 | 1503 | 15.556 |

S A P 9 0 F R A M E E L E M E N T D A T A

| ELT ID | JOINT END-I | JOINT END-J | ELEMENT LENGTH (in) |
|---|---|---|---|
| 503 | 1601 | 1603 | 15.556 |
| 504 | 1702 | 1703 | 11.000 |
| 505 | 1704 | 1703 | 11.000 |
| 601 | 1801 | 2001 | 23.353 |
| 602 | 1802 | 2001 | 25.814 |
| 603 | 1803 | 2001 | 23.353 |
| 604 | 1804 | 2001 | 20.600 |





AISC SPECIFICATIONS, ASD 1989
AXIAL LOAD & BIAXIAL MOMENT INTERACTION STRESS CHECK

| ELEM ID | SECTION TYPE | CHK TYPE | STRESS = AXL + B33 + B22 RATIO | | | | STATION LOCATION (in) | COMBO NO | AISC EQUATION | SECTION TYPE |
|---|---|---|---|---|---|---|---|---|---|---|
| 201 | P | | | | | | | | | COMPACT |
| | | (C) | 0.209 | 0.107 | 0.099 | 0.023 | 0.00 | 2 | (H1-3) | |
| | | (T) | 0.160 | 0.055 | 0.102 | 0.025 | 0.00 | 3 | (H2-1) | |
| 202 | P | | | | | | | | | COMPACT |
| | | (C) | 0.202 | 0.111 | 0.025 | 0.088 | 0.00 | 4 | (H1-3) | |
| | | (T) | 0.144 | 0.052 | 0.023 | 0.089 | 0.00 | 3 | (H2-1) | |
| 203 | P | | | | | | | | | COMPACT |
| | | (C) | 0.220 | 0.106 | 0.111 | 0.021 | 0.00 | 2 | (H1-3) | |
| | | (T) | 0.165 | 0.055 | 0.109 | 0.019 | 0.00 | 3 | (H2-1) | |
| 204 | P | | | | | | | | | COMPACT |
| | | (C) | 0.208 | 0.107 | 0.025 | 0.098 | 0.00 | 2 | (H1-3) | |
| | | (T) | 0.158 | 0.058 | 0.029 | 0.095 | 0.00 | 3 | (H2-1) | |
| 205 | P | | | | | | | | | COMPACT |
| | | (C) | 0.157 | 0.101 | 0.044 | 0.035 | 0.00 | 2 | (H1-3) | |
| | | (T) | 0.108 | 0.052 | 0.044 | 0.035 | 0.00 | 3 | (H2-1) | |
| 206 | P | | | | | | | | | COMPACT |
| | | (C) | 0.156 | 0.104 | 0.035 | 0.039 | 0.00 | 4 | (H1-3) | |
| | | (T) | 0.102 | 0.048 | 0.049 | 0.021 | 10.11 | 3 | (H2-1) | |
| 207 | P | | | | | | | | | COMPACT |
| | | (C) | 0.156 | 0.099 | 0.048 | 0.032 | 0.00 | 2 | (H1-3) | |
| | | (T) | 0.108 | 0.051 | 0.048 | 0.031 | 0.00 | 3 | (H2-1) | |
| 208 | P | | | | | | | | | COMPACT |
| | | (C) | 0.159 | 0.100 | 0.054 | 0.022 | 10.11 | 2 | (H1-3) | |
| | | (T) | 0.113 | 0.055 | 0.041 | 0.042 | 0.00 | 3 | (H2-1) | |
| 209 | P | | | | | | | | | COMPACT |
| | | (C) | 0.088 | 0.047 | 0.012 | 0.039 | 0.00 | 2 | (H1-3) | |
| | | (T) | 0.064 | 0.024 | 0.013 | 0.038 | 0.00 | 3 | (H2-1) | |
| 210 | P | | | | | | | | | COMPACT |
| | | (C) | 0.089 | 0.049 | 0.039 | 0.011 | 0.00 | 4 | (H1-3) | |
| | | (T) | 0.064 | 0.023 | 0.040 | 0.011 | 0.00 | 3 | (H2-1) | |
| 211 | P | | | | | | | | | COMPACT |
| | | (C) | 0.084 | 0.047 | 0.013 | 0.035 | 0.00 | 2 | (H1-3) | |
| | | (T) | 0.062 | 0.024 | 0.013 | 0.035 | 0.00 | 3 | (H2-1) | |
| 212 | P | | | | | | | | | COMPACT |
| | | (C) | 0.093 | 0.047 | 0.044 | 0.012 | 0.00 | 2 | (H1-3) | |
| | | (T) | 0.071 | 0.026 | 0.044 | 0.012 | 0.00 | 3 | (H2-1) | |
| 213 | P | | | | | | | | | COMPACT |
| | | (C) | 0.088 | 0.047 | 0.012 | 0.039 | 0.00 | 2 | (H1-3) | |
| | | (T) | 0.064 | 0.024 | 0.013 | 0.038 | 0.00 | 3 | (H2-1) | |
| 214 | P | | | | | | | | | COMPACT |
| | | (C) | 0.089 | 0.049 | 0.039 | 0.011 | 0.00 | 4 | (H1-3) | |
| | | (T) | 0.064 | 0.023 | 0.040 | 0.011 | 0.00 | 3 | (H2-1) | |
| 215 | P | | | | | | | | | COMPACT |
| | | (C) | 0.084 | 0.047 | 0.013 | 0.035 | 0.00 | 2 | (H1-3) | |
| | | (T) | 0.062 | 0.024 | 0.013 | 0.035 | 0.00 | 3 | (H2-1) | |
| 216 | P | | | | | | | | | COMPACT |
| | | (C) | 0.093 | 0.047 | 0.044 | 0.012 | 0.00 | 2 | (H1-3) | |
| | | (T) | 0.071 | 0.026 | 0.044 | 0.012 | 0.00 | 3 | (H2-1) | |

PAGE 17
SAP90 FILE:CM-A-04/SAPSTL_FILE:CM-A-04S.STL
WHC/MPF CAMERA ASSEMBLY ANALYSIS JOB#: 86458-01 RUN ID: CM-A-04S

AISC SPECIFICATIONS, ASD 1989
AXIAL LOAD & BIAXIAL MOMENT INTERACTION STRESS CHECK

| ELEM ID | SECTION TYPE | CHK TYPE | STRESS = AXL + B33 + B22 RATIO | | | | STATION LOCATION (in) | COMBO NO | AISC EQUATION | SECTION TYPE |
|---|---|---|---|---|---|---|---|---|---|---|
| 217 | P | | | | | | | | | COMPACT |
| | | (C) | 0.138 | 0.090 | 0.039 | 0.028 | 0.00 | 2 | (H1-3) | |
| | | (T) | 0.095 | 0.046 | 0.040 | 0.028 | 0.00 | 3 | (H2-1) | |
| 218 | P | | | | | | | | | COMPACT |
| | | (C) | 0.138 | 0.093 | 0.028 | 0.035 | 0.00 | 4 | (H1-3) | |
| | | (T) | 0.089 | 0.043 | 0.029 | 0.035 | 0.00 | 3 | (H2-1) | |
| 219 | P | | | | | | | | | COMPACT |
| | | (C) | 0.139 | 0.088 | 0.044 | 0.026 | 0.00 | 2 | (H1-3) | |
| | | (T) | 0.097 | 0.046 | 0.044 | 0.026 | 0.00 | 3 | (H2-1) | |
| 220 | P | | | | | | | | | COMPACT |
| | | (C) | 0.140 | 0.090 | 0.033 | 0.038 | 0.00 | 2 | (H1-3) | |
| | | (T) | 0.099 | 0.050 | 0.032 | 0.038 | 0.00 | 3 | (H2-1) | |
| 221 | P | | | | | | | | | COMPACT |
| | | (C) | 0.124 | 0.084 | 0.013 | 0.038 | 0.00 | 2 | (H1-3) | |
| | | (T) | 0.083 | 0.044 | 0.014 | 0.037 | 0.00 | 3 | (H2-1) | |
| 222 | P | | | | | | | | | COMPACT |
| | | (C) | 0.128 | 0.088 | 0.038 | 0.012 | 0.00 | 4 | (H1-3) | |
| | | (T) | 0.081 | 0.040 | 0.039 | 0.011 | 0.00 | 3 | (H2-1) | |
| 223 | P | | | | | | | | | COMPACT |
| | | (C) | 0.121 | 0.084 | 0.015 | 0.034 | 0.00 | 2 | (H1-3) | |
| | | (T) | 0.080 | 0.043 | 0.015 | 0.034 | 0.00 | 3 | (H2-1) | |
| 224 | P | | | | | | | | | COMPACT |
| | | (C) | 0.129 | 0.084 | 0.043 | 0.013 | 0.00 | 2 | (H1-3) | |
| | | (T) | 0.092 | 0.047 | 0.043 | 0.013 | 0.00 | 3 | (H2-1) | |
| 225 | P | | | | | | | | | COMPACT |
| | | (C) | 0.113 | 0.080 | 0.013 | 0.030 | 10.11 | 2 | (H1-3) | |
| | | (T) | 0.074 | 0.041 | 0.014 | 0.030 | 10.11 | 3 | (H2-1) | |
| 226 | P | | | | | | | | | COMPACT |
| | | (C) | 0.115 | 0.083 | 0.030 | 0.011 | 10.11 | 4 | (H1-3) | |
| | | (T) | 0.070 | 0.038 | 0.030 | 0.011 | 10.11 | 3 | (H2-1) | |
| 227 | P | | | | | | | | | COMPACT |
| | | (C) | 0.108 | 0.078 | 0.015 | 0.026 | 10.11 | 2 | (H1-3) | |
| | | (T) | 0.071 | 0.041 | 0.015 | 0.026 | 10.11 | 3 | (H2-1) | |
| 228 | P | | | | | | | | | COMPACT |
| | | (C) | 0.116 | 0.080 | 0.034 | 0.013 | 10.11 | 2 | (H1-3) | |
| | | (T) | 0.081 | 0.044 | 0.034 | 0.013 | 10.11 | 3 | (H2-1) | |
| 229 | P | | | | | | | | | COMPACT |
| | | (C) | 0.138 | 0.075 | 0.063 | 0.009 | 13.89 | 2 | (H1-3) | |
| | | (T) | 0.102 | 0.039 | 0.063 | 0.009 | 13.89 | 3 | (H2-1) | |
| 230 | P | | | | | | | | | COMPACT |
| | | (C) | 0.134 | 0.078 | 0.009 | 0.055 | 13.89 | 4 | (H1-3) | |
| | | (T) | 0.091 | 0.035 | 0.009 | 0.054 | 13.89 | 3 | (H2-1) | |
| 231 | P | | | | | | | | | COMPACT |
| | | (C) | 0.146 | 0.074 | 0.071 | 0.009 | 13.89 | 2 | (H1-3) | |
| | | (T) | 0.111 | 0.038 | 0.072 | 0.008 | 13.89 | 3 | (H2-1) | |
| 232 | P | | | | | | | | | COMPACT |
| | | (C) | 0.138 | 0.075 | 0.011 | 0.063 | 13.89 | 2 | (H1-3) | |
| | | (T) | 0.106 | 0.042 | 0.011 | 0.063 | 13.89 | 3 | (H2-1) | |



PAGE 18
SAP90 FILE:CM-A-04/SAPSTL_FILE:CM-A-04S.STL
WHC/MPF CAMERA ASSEMBLY ANALYSIS JOB#: 86458-01 RUN ID: CM-A-04S

AISC SPECIFICATIONS, ASD 1989
AXIAL LOAD & BIAXIAL MOMENT INTERACTION STRESS CHECK

| ELEM ID | SECTION TYPE | CHK TYPE | STRESS = AXL + B33 + B22 RATIO | | | | STATION LOCATION (in) | COMBO NO | AISC EQUATION | SECTION TYPE |
|---|---|---|---|---|---|---|---|---|---|---|
| 233 | P | | | | | | | | | COMPACT |
| | | (L) | 0.101 | 0.069 | 0.031 | 0.009 | 0.00 | 2 | (H1-3) | |
| | | (T) | 0.068 | 0.036 | 0.031 | 0.009 | 0.00 | 3 | (H2-1) | |
| 234 | P | | | | | | | | | COMPACT |
| | | (C) | 0.100 | 0.071 | 0.010 | 0.027 | 0.00 | 4 | (H1-3) | |
| | | (T) | 0.061 | 0.032 | 0.011 | 0.026 | 0.00 | 3 | (H2-1) | |
| 235 | P | | | | | | | | | COMPACT |
| | | (C) | 0.102 | 0.066 | 0.035 | 0.010 | 0.00 | 2 | (H1-3) | |
| | | (T) | 0.071 | 0.035 | 0.035 | 0.010 | 0.00 | 3 | (H2-1) | |
| 236 | P | | | | | | | | | COMPACT |
| | | (C) | 0.100 | 0.068 | 0.010 | 0.030 | 0.00 | 2 | (H1-3) | |
| | | (T) | 0.071 | 0.039 | 0.011 | 0.030 | 0.00 | 3 | (H2-1) | |
| 237 | P | | | | | | | | | COMPACT |
| | | (C) | 0.147 | 0.060 | 0.022 | 0.085 | 13.14 | 2 | (H1-3) | |
| | | (T) | 0.119 | 0.032 | 0.022 | 0.085 | 13.14 | 3 | (H2-1) | |
| 238 | P | | | | | | | | | COMPACT |
| | | (C) | 0.150 | 0.063 | 0.086 | 0.016 | 13.14 | 4 | (H1-3) | |
| | | (T) | 0.115 | 0.028 | 0.086 | 0.015 | 13.14 | 3 | (H2-1) | |
| 239 | P | | | | | | | | | COMPACT |
| | | (C) | 0.139 | 0.059 | 0.025 | 0.076 | 13.14 | 2 | (H1-3) | |
| | | (T) | 0.111 | 0.031 | 0.025 | 0.075 | 13.14 | 3 | (H2-1) | |
| 240 | P | | | | | | | | | COMPACT |
| | | (C) | 0.159 | 0.060 | 0.097 | 0.023 | 13.14 | 2 | (H1-3) | |
| | | (T) | 0.135 | 0.035 | 0.097 | 0.023 | 13.14 | 3 | (H2-1) | |
| 241 | P | | | | | | | | | COMPACT |
| | | (C) | 0.139 | 0.044 | 0.093 | 0.020 | 0.00 | 2 | (H1-3) | |
| | | (T) | 0.119 | 0.024 | 0.093 | 0.020 | 0.00 | 3 | (H2-1) | |
| 242 | P | | | | | | | | | COMPACT |
| | | (C) | 0.126 | 0.047 | 0.014 | 0.078 | 0.00 | 4 | (H1-3) | |
| | | (T) | 0.099 | 0.020 | 0.014 | 0.078 | 0.00 | 3 | (H2-1) | |
| 243 | P | | | | | | | | | COMPACT |
| | | (C) | 0.145 | 0.044 | 0.100 | 0.017 | 0.00 | 2 | (H1-3) | |
| | | (T) | 0.125 | 0.024 | 0.100 | 0.017 | 0.00 | 3 | (H2-1) | |
| 244 | P | | | | | | | | | COMPACT |
| | | (C) | 0.135 | 0.043 | 0.025 | 0.088 | 0.00 | 2 | (H1-3) | |
| | | (T) | 0.118 | 0.027 | 0.025 | 0.088 | 0.00 | 3 | (H2-1) | |
| 245 | P | | | | | | | | | COMPACT |
| | | (C) | 0.090 | 0.038 | 0.025 | 0.045 | 10.11 | 2 | (H1-3) | |
| | | (T) | 0.072 | 0.021 | 0.025 | 0.044 | 10.11 | 3 | (H2-1) | |
| 246 | P | | | | | | | | | COMPACT |
| | | (C) | 0.090 | 0.039 | 0.044 | 0.025 | 10.11 | 4 | (H1-3) | |
| | | (T) | 0.067 | 0.016 | 0.045 | 0.024 | 10.11 | 3 | (H2-1) | |
| 247 | P | | | | | | | | | COMPACT |
| | | (C) | 0.084 | 0.036 | 0.026 | 0.040 | 10.11 | 2 | (H1-3) | |
| | | (T) | 0.068 | 0.020 | 0.026 | 0.040 | 10.11 | 3 | (H2-1) | |
| 248 | P | | | | | | | | | COMPACT |
| | | (C) | 0.093 | 0.036 | 0.051 | 0.024 | 10.11 | 2 | (H1-3) | |
| | | (T) | 0.080 | 0.023 | 0.051 | 0.024 | 10.11 | 3 | (H2-1) | |

PAGE 19
SAP90 FILE:CM-A-04/SAPSTL_FILE:CM-A-04S.STL
WHC/MPF CAMERA ASSEMBLY ANALYSIS JOB#: 66458-01 RUN ID: CM-A-04S

AISC SPECIFICATIONS, ASD 1989
AXIAL LOAD & BIAXIAL MOMENT INTERACTION STRESS CHECK

| ELEM ID | SECTION TYPE | CHK TYPE | STRESS = AXL + B33 + B22 RATIO | | | | STATION LOCATION (in) | COMBO NO | AISC EQUATION | SECTION TYPE |
|---|---|---|---|---|---|---|---|---|---|---|
| 249 | P | | | | | | | | | COMPACT |
| | | (C) | 0.111 | 0.029 | 0.026 | 0.079 | 0.00 | 2 | (H1-3) | |
| | | (T) | 0.099 | 0.016 | 0.026 | 0.078 | 0.00 | 3 | (H2-1) | |
| 250 | P | | | | | | | | | COMPACT |
| | | (C) | 0.112 | 0.030 | 0.079 | 0.023 | 0.00 | 4 | (H1-3) | |
| | | (T) | 0.094 | 0.012 | 0.079 | 0.022 | 0.00 | 3 | (H2-1) | |
| 251 | P | | | | | | | | | COMPACT |
| | | (C) | 0.105 | 0.030 | 0.028 | 0.070 | 0.00 | 2 | (H1-3) | |
| | | (T) | 0.092 | 0.017 | 0.028 | 0.070 | 0.00 | 3 | (H2-1) | |
| 252 | P | | | | | | | | | COMPACT |
| | | (C) | 0.119 | 0.027 | 0.089 | 0.023 | 0.00 | 2 | (H1-3) | |
| | | (T) | 0.111 | 0.019 | 0.089 | 0.023 | 0.00 | 3 | (H2-1) | |
| 253 | P | | | | | | | | | COMPACT |
| | | (C) | 0.073 | 0.027 | 0.011 | 0.045 | 0.00 | 2 | (H1-3) | |
| | | (T) | 0.062 | 0.015 | 0.011 | 0.045 | 0.00 | 3 | (H2-1) | |
| 254 | P | | | | | | | | | COMPACT |
| | | (C) | 0.077 | 0.030 | 0.046 | 0.008 | 0.00 | 4 | (H1-3) | |
| | | (T) | 0.059 | 0.012 | 0.047 | 0.008 | 0.00 | 3 | (H2-1) | |
| 255 | P | | | | | | | | | COMPACT |
| | | (C) | 0.076 | 0.028 | 0.014 | 0.046 | 0.00 | 2 | (H1-3) | |
| | | (T) | 0.063 | 0.016 | 0.014 | 0.045 | 0.00 | 3 | (H2-1) | |
| 256 | P | | | | | | | | | COMPACT |
| | | (C) | 0.080 | 0.027 | 0.053 | 0.007 | 0.00 | 2 | (H1-3) | |
| | | (T) | 0.072 | 0.018 | 0.053 | 0.007 | 0.00 | 3 | (H2-1) | |
| 257 | P | | | | | | | | | COMPACT |
| | | (C) | 0.084 | 0.025 | 0.038 | 0.045 | 17.00 | 2 | (H1-3) | |
| | | (T) | 0.073 | 0.014 | 0.038 | 0.044 | 17.00 | 3 | (H2-1) | |
| 258 | P | | | | | | | | | COMPACT |
| | | (C) | 0.085 | 0.030 | 0.045 | 0.031 | 17.00 | 4 | (H1-3) | |
| | | (T) | 0.067 | 0.012 | 0.045 | 0.031 | 17.00 | 2 | (H2-1) | |
| 259 | P | | | | | | | | | COMPACT |
| | | (C) | 0.085 | 0.026 | 0.041 | 0.042 | 17.00 | 2 | (H1-3) | |
| | | (T) | 0.073 | 0.014 | 0.041 | 0.042 | 17.00 | 3 | (H2-1) | |
| 260 | P | | | | | | | | | COMPACT |
| | | (C) | 0.088 | 0.027 | 0.051 | 0.034 | 17.00 | 2 | (H1-3) | |
| | | (T) | 0.079 | 0.018 | 0.051 | 0.034 | 17.00 | 3 | (H2-1) | |
| 261 | P | | | | | | | | | COMPACT |
| | | (C) | 0.125 | 0.024 | 0.055 | 0.085 | 16.89 | 2 | (H1-3) | |
| | | (T) | 0.114 | 0.013 | 0.056 | 0.085 | 16.89 | 3 | (H2-1) | |
| 262 | P | | | | | | | | | COMPACT |
| | | (C) | 0.130 | 0.030 | 0.087 | 0.048 | 16.89 | 4 | (H1-3) | |
| | | (T) | 0.111 | 0.012 | 0.087 | 0.048 | 16.89 | 2 | (H2-1) | |
| 263 | P | | | | | | | | | COMPACT |
| | | (C) | 0.127 | 0.025 | 0.065 | 0.079 | 16.89 | 2 | (H1-3) | |
| | | (T) | 0.116 | 0.013 | 0.066 | 0.079 | 16.89 | 3 | (H2-1) | |
| 264 | P | | | | | | | | | COMPACT |
| | | (C) | 0.138 | 0.027 | 0.099 | 0.051 | 16.89 | 2 | (H1-3) | |
| | | (T) | 0.129 | 0.018 | 0.099 | 0.051 | 16.89 | 3 | (H2-1) | |



PAGE 20
SAP90 FILE:CM-A-04/SAPSTL_FILE:CM-A-04S.STL
WHC/MPF CAMERA ASSEMBLY ANALYSIS JOB#: 66458-01 RUN ID: CM-A-04S

AISC SPECIFICATIONS, ASD 1989
AXIAL LOAD & BIAXIAL MOMENT INTERACTION STRESS CHECK

| ELEM ID | SECTION TYPE | CHK TYPE | STRESS = AXL + B33 + B22 RATIO | | | | STATION LOCATION (in) | COMBO NO | AISC EQUATION | SECTION TYPE |
|---|---|---|---|---|---|---|---|---|---|---|
| 265 | P | | | | | | | | | COMPACT |
| | | (C) | 0.132 | 0.024 | 0.058 | 0.091 | 2.25 | 2 | (H1-3) | |
| | | (T) | 0.121 | 0.013 | 0.058 | 0.091 | 2.25 | 3 | (H2-1) | |
| 266 | P | | | | | | | | | COMPACT |
| | | (C) | 0.136 | 0.029 | 0.092 | 0.053 | 2.25 | 4 | (H1-3) | |
| | | (T) | 0.118 | 0.012 | 0.092 | 0.053 | 2.25 | 2 | (H2-1) | |
| 267 | P | | | | | | | | | COMPACT |
| | | (C) | 0.123 | 0.023 | 0.071 | 0.070 | 2.25 | 2 | (H1-3) | |
| | | (T) | 0.112 | 0.013 | 0.072 | 0.069 | 2.25 | 3 | (H2-1) | |
| 268 | P | | | | | | | | | COMPACT |
| | | (C) | 0.131 | 0.026 | 0.091 | 0.051 | 0.00 | 2 | (H1-3) | |
| | | (T) | 0.122 | 0.017 | 0.092 | 0.051 | 0.00 | 3 | (H2-1) | |
| 401 | R | | | | | | | | | COMPACT |
| | | (C) | 0.310 | 0.100 | 0.192 | 0.019 | 14.10 | 2 | (H1-3) | |
| | | (T) | 0.231 | 0.020 | 0.192 | 0.018 | 14.10 | 3 | (H2-1) | |
| 402 | R | | | | | | | | | COMPACT |
| | | (C) | 0.276 | 0.088 | 0.169 | 0.019 | 14.10 | 4 | (H1-3) | |
| | | (T) | 0.206 | 0.018 | 0.170 | 0.019 | 14.10 | 3 | (H2-1) | |
| 403 | R | | | | | | | | | COMPACT |
| | | (C) | 0.275 | 0.090 | 0.171 | 0.015 | 14.10 | 2 | (H1-3) | |
| | | (T) | 0.205 | 0.018 | 0.172 | 0.015 | 14.10 | 3 | (H2-1) | |
| 404 | R | | | | | | | | | COMPACT |
| | | (C) | 0.309 | 0.101 | 0.193 | 0.015 | 14.10 | 2 | (H1-3) | |
| | | (T) | 0.229 | 0.020 | 0.194 | 0.015 | 14.10 | 3 | (H2-1) | |
| 405 | R | | | | | | | | | COMPACT |
| | | (C) | 0.376 | 0.048 | 0.304 | 0.024 | 0.00 | 2 | (H1-3) | |
| | | (T) | 0.338 | 0.009 | 0.304 | 0.024 | 0.00 | 2 | (H2-1) | |
| 406 | R | | | | | | | | | COMPACT |
| | | (C) | 0.338 | 0.043 | 0.270 | 0.025 | 0.00 | 2 | (H1-3) | |
| | | (T) | 0.303 | 0.008 | 0.270 | 0.025 | 0.00 | 2 | (H2-1) | |
| 407 | R | | | | | | | | | COMPACT |
| | | (C) | 0.335 | 0.043 | 0.271 | 0.021 | 0.00 | 2 | (H1-3) | |
| | | (T) | 0.301 | 0.008 | 0.271 | 0.021 | 0.00 | 2 | (H2-1) | |
| 408 | R | | | | | | | | | COMPACT |
| | | (C) | 0.373 | 0.048 | 0.305 | 0.021 | 0.00 | 2 | (H1-3) | |
| | | (T) | 0.335 | 0.009 | 0.305 | 0.021 | 0.00 | 2 | (H2-1) | |
| 409 | R | | | | | | | | | COMPACT |
| | | (C) | 0.389 | 0.045 | 0.320 | 0.023 | 14.10 | 4 | (H1-3) | |
| | | (T) | 0.352 | 0.009 | 0.320 | 0.023 | 14.10 | 4 | (H2-1) | |
| 410 | R | | | | | | | | | COMPACT |
| | | (C) | 0.348 | 0.041 | 0.283 | 0.024 | 14.10 | 4 | (H1-3) | |
| | | (T) | 0.315 | 0.008 | 0.283 | 0.024 | 14.10 | 4 | (H2-1) | |
| 411 | R | | | | | | | | | COMPACT |
| | | (C) | 0.352 | 0.041 | 0.284 | 0.027 | 14.10 | 4 | (H1-3) | |
| | | (T) | 0.319 | 0.008 | 0.284 | 0.027 | 14.10 | 4 | (H2-1) | |
| 412 | R | | | | | | | | | COMPACT |
| | | (C) | 0.392 | 0.046 | 0.321 | 0.026 | 14.10 | 4 | (H1-3) | |
| | | (T) | 0.358 | 0.009 | 0.321 | 0.026 | 14.10 | 4 | (H2-1) | |

SAP90 FILE:CM-A-04/SAPSTL FILE:CM-A-04S.STL

WHC/MPF CAMERA ASSEMBLY ANALYSIS JOB#: 66458-01 RUN ID: CM-A-04S

AISC SPECIFICATIONS, ASD 1989
AXIAL LOAD & BIAXIAL MOMENT INTERACTION STRESS CHECK

| ELEM ID | SECTION TYPE | CHK TYPE | STRESS = AXL + B33 + B22 RATIO | | | | STATION LOCATION (in) | COMBO NO | AISC EQUATION | SECTION TYPE |
|---|---|---|---|---|---|---|---|---|---|---|
| 413 | R | | | | | | | | | COMPACT |
| | | (C) | 0.362 | 0.119 | 0.226 | 0.017 | 0.00 | 2 | (H1-3) | |
| | | (T) | 0.267 | 0.023 | 0.226 | 0.017 | 0.00 | 3 | (H2-1) | |
| 414 | R | | | | | | | | | COMPACT |
| | | (C) | 0.320 | 0.104 | 0.198 | 0.018 | 0.00 | 2 | (H1-3) | |
| | | (T) | 0.237 | 0.020 | 0.198 | 0.018 | 0.00 | 2 | (H2-1) | |
| 415 | R | | | | | | | | | COMPACT |
| | | (C) | 0.317 | 0.102 | 0.197 | 0.018 | 0.00 | 2 | (H1-3) | |
| | | (T) | 0.235 | 0.020 | 0.197 | 0.018 | 0.00 | 2 | (H2-1) | |
| 416 | R | | | | | | | | | COMPACT |
| | | (C) | 0.361 | 0.118 | 0.226 | 0.017 | 0.00 | 2 | (H1-3) | |
| | | (T) | 0.266 | 0.023 | 0.226 | 0.017 | 0.00 | 2 | (H2-1) | |
| 417 | R | | | | | | | | | COMPACT |
| | | (C) | 0.380 | 0.130 | 0.229 | 0.021 | 14.10 | 4 | (H1-3) | |
| | | (T) | 0.276 | 0.026 | 0.229 | 0.021 | 14.10 | 4 | (H2-1) | |
| 418 | R | | | | | | | | | COMPACT |
| | | (C) | 0.332 | 0.106 | 0.207 | 0.019 | 14.10 | 2 | (H1-3) | |
| | | (T) | 0.247 | 0.021 | 0.207 | 0.019 | 14.10 | 2 | (H2-1) | |
| 419 | R | | | | | | | | | COMPACT |
| | | (C) | 0.327 | 0.107 | 0.202 | 0.018 | 14.10 | 4 | (H1-3) | |
| | | (T) | 0.241 | 0.021 | 0.202 | 0.018 | 14.10 | 4 | (H2-1) | |
| 420 | R | | | | | | | | | COMPACT |
| | | (C) | 0.371 | 0.121 | 0.230 | 0.020 | 14.10 | 4 | (H1-3) | |
| | | (T) | 0.274 | 0.024 | 0.230 | 0.020 | 14.10 | 4 | (H2-1) | |
| 501 | R | | | | | | | | | COMPACT |
| | | (C) | 0.167 | 0.002 | 0.016 | 0.148 | 14.75 | 4 | (H1-3) | |
| | | (T) | 0.166 | 0.001 | 0.016 | 0.148 | 14.75 | 2 | (H2-1) | |
| 502 | R | | | | | | | | | COMPACT |
| | | (C) | 0.164 | 0.001 | 0.004 | 0.160 | 0.80 | 4 | (H1-3) | |
| | | (T) | 0.164 | 0.000 | 0.004 | 0.160 | 0.80 | 4 | (H2-1) | |
| 503 | R | | | | | | | | | COMPACT |
| | | (C) | 0.132 | 0.000 | 0.014 | 0.118 | 0.80 | 4 | (H1-3) | |
| | | (T) | 0.132 | 0.000 | 0.014 | 0.118 | 0.80 | 4 | (H2-1) | |
| 504 | P | | | | | | | | | COMPACT |
| | | (C) | 0.062 | 0.009 | 0.009 | 0.052 | 10.20 | 3 | (H1-3) | |
| | | (T) | 0.061 | 0.007 | 0.009 | 0.052 | 10.20 | 3 | (H2-1) | |
| 505 | P | | | | | | | | | COMPACT |
| | | (C) | 0.067 | 0.008 | 0.010 | 0.058 | 0.80 | 4 | (H1-3) | |
| | | (T) | 0.065 | 0.006 | 0.010 | 0.058 | 0.80 | 2 | (H2-1) | |

## 5.4 Selective Graphical Output

The following are given in this section:

- Mode shapes & Frequencies, including:

  CM-A-04.RIT for Model A (Camera assembly only)
  CM-B-01.RIT for Model B (Camera + MPF risers)

- Shell Element stresses for

  - 3" thick Shielding plate
  - 2" thick 4" high Manifold tube
  - 3/4" thick flange plate
  - 1/2" Mating plate
  - 1/2" Bottom plate

  Each set of plots includes:

  SMXT Maximum principal stresses at top of plate
  SMXB Maximum principal stresses at bottom of plate
  SVM Maximum shear stresses

  for both load case 3 (DL + LC2 + RS) and for load case 4 (DL - LC2 - RS) as described in Section 3.

| URS/John A. Blume & Associates, Engineers | | |
|---|---|---|
| JOB No. | 66481-01 | |
| CALC. No. | 5.4.1 thru 5.4 60 | |
| BY | PW | DATE 6/8/94 |
| CKD | K/G | DATE 7/13/94 |

MODEL A CALL ONLY

```
      $$$$$$$$     $$$$$$$$$$    $$$$$$$       $$$$$$$$      $$$$$$$
     $$$$$$$$$$   $$$$$$$$$$   $$$$$$$$$$   $$$$$$$$$$$   $$$$$$$$$$
    $$           $$      $$   $$       $$  $$       $$   $$       $$
   $$           $$      $$   $$       $$  $$       $$   $$       $$
   $$$$$$$$     $$$$$$$$$$   $$$$$$$$$$    $$$$$$$$$$   $$       $$
         $$    $$      $$   $$                   $$   $$       $$
        $$    $$      $$   $$                   $$   $$       $$
$$$$$$$$$$   $$      $$   $$            $$$$$$$$$$    $$$$$$$$$$
$$$$$$$$     $$      $$   $$            $$$$$$$$       $$$$$$$
```

STRUCTURAL ANALYSIS PROGRAMS

VERSION P5.40

Copyright (C) 1978-1992
EDWARD L. WILSON
All rights reserved

PAGE 1
PROGRAM:SAP90/FILE:cm-a-04.RIT
WHC/MPF CAMERA ASSEMBLY MODEL JOB#: 66458-01 RUN: CM-A-04

R I T Z  S Y S T E M  P A R A M E T E R S

| | | |
|---|---|---|
| NUMBER OF EQUATIONS | = | 1650 |
| NUMBER OF MASSES | = | 327 |
| NUMBER OF RITZ VECTORS | = | 20 |
| NUMBER OF DIRECTION VECTORS | = | 3 |



PAGE 2
PROGRAM:SAP90/FILE:cm-a-04.RIT
WHC/MPF CAMERA ASSEMBLY MODEL JOB#: 66458-01 RUN: CM-A-04

E I G E N V A L U E S  A N D  F R E Q U E N C I E S

| MODE NUMBER | EIGENVALUE (RAD/SEC)**2 | CIRCULAR FREQ (RAD/SEC) | FREQUENCY (CYCLES/SEC) | PERIOD (SEC) |
|---|---|---|---|---|
| 1 | 0.407498E+03 | 0.201866E+02 | 3.212794 | 0.311256 |
| 2 | 0.411552E+03 | 0.202867E+02 | 3.228734 | 0.309719 |
| 3 | 0.449698E+04 | 0.670595E+02 | 10.672851 | 0.093696 |
| 4 | 0.578889E+04 | 0.760848E+02 | 12.109266 | 0.082581 |
| 5 | 0.864802E+04 | 0.929948E+02 | 14.800574 | 0.067565 |
| 6 | 0.424371E+05 | 0.206003E+03 | 32.786347 | 0.030501 |
| 7 | 0.579778E+05 | 0.240786E+03 | 38.322254 | 0.026094 |
| 8 | 0.611514E+05 | 0.247288E+03 | 39.357134 | 0.025408 |
| 9 | 0.628768E+05 | 0.250753E+03 | 39.908501 | 0.025057 |
| 10 | 0.859494E+05 | 0.293171E+03 | 46.659657 | 0.021432 |
| 11 | 0.105259E+06 | 0.324437E+03 | 51.635676 | 0.019366 |
| 12 | 0.127686E+06 | 0.357332E+03 | 56.871182 | 0.017584 |
| 13 | 0.212823E+06 | 0.461328E+03 | 73.422577 | 0.013620 |
| 14 | 0.222035E+06 | 0.471206E+03 | 74.994830 | 0.013334 |
| 15 | 0.257731E+06 | 0.507673E+03 | 80.798591 | 0.012376 |
| 16 | 0.321171E+06 | 0.566719E+03 | 90.196163 | 0.011087 |
| 17 | 0.423339E+06 | 0.650645E+03 | 103.553415 | 0.009657 |
| 18 | 0.601809E+06 | 0.775764E+03 | 123.466621 | 0.008099 |
| 19 | 0.756031E+06 | 0.869500E+03 | 138.385264 | 0.007226 |
| 20 | 0.105368E+07 | 0.102649E+04 | 163.370948 | 0.006121 |

PAGE 3
PROGRAM:SAP90/FILE:cm-a-04.RIT
WHC/MPF CAMERA ASSEMBLY MODEL JOB#: 66458-01 RUN: CM-A-04

B A S E  F O R C E  R E A C T I O N  F A C T O R S

| MODE # | PERIOD (sec) | X DIRECTION | Y DIRECTION | Z DIRECTION | X MOMENT | Y MOMENT | Z MOMENT |
|---|---|---|---|---|---|---|---|
| 1 | 0.311 | 0.122E-02 | 0.262E-01 | -0.150E-03 | 0.483E+01 | -0.219E+00 | 0.918E-01 |
| 2 | 0.310 | 0.263E-01 | -0.131E-02 | 0.152E-03 | -0.225E+00 | -0.484E+01 | 0.834E-01 |
| 3 | 0.094 | 0.630E-02 | 0.604E-02 | 0.169E-04 | 0.196E+00 | -0.221E+00 | -0.141E+00 |
| 4 | 0.083 | -0.690E-02 | 0.739E-02 | 0.427E-03 | 0.150E+00 | 0.107E+00 | 0.141E-02 |
| 5 | 0.068 | 0.412E-02 | 0.376E-02 | -0.585E-04 | -0.335E-01 | 0.141E-01 | 0.104E+00 |
| 6 | 0.031 | -0.820E-03 | -0.781E-03 | -0.943E-04 | -0.296E-01 | 0.299E-01 | 0.605E-01 |
| 7 | 0.026 | -0.332E-03 | -0.354E-03 | -0.457E-05 | -0.703E-02 | 0.730E-02 | 0.200E-02 |
| 8 | 0.025 | -0.347E-02 | 0.530E-02 | -0.604E-04 | 0.737E-01 | 0.335E-01 | 0.240E-02 |
| 9 | 0.025 | 0.531E-02 | 0.329E-02 | -0.988E-04 | 0.320E-01 | -0.644E-01 | 0.104E-01 |
| 10 | 0.021 | 0.834E-03 | 0.102E-02 | 0.321E-03 | -0.254E-01 | 0.133E-01 | -0.278E-01 |
| 11 | 0.019 | 0.936E-03 | -0.199E-02 | -0.387E-02 | 0.620E-01 | 0.583E-01 | -0.347E-02 |
| 12 | 0.018 | -0.168E-02 | -0.829E-03 | 0.165E-02 | -0.300E-02 | -0.331E-01 | -0.692E-02 |
| 13 | 0.014 | -0.936E-03 | 0.441E-03 | -0.702E-02 | 0.589E-01 | 0.894E-01 | 0.541E-02 |
| 14 | 0.013 | -0.663E-03 | 0.183E-02 | -0.746E-02 | 0.127E+00 | 0.702E-01 | -0.689E-02 |
| 15 | 0.012 | 0.214E-02 | 0.528E-04 | 0.182E-02 | 0.109E-01 | -0.101E+00 | -0.527E-02 |
| 16 | 0.011 | 0.125E-02 | 0.273E-02 | 0.146E-02 | 0.772E-01 | -0.543E-01 | 0.438E-02 |
| 17 | 0.010 | -0.308E-02 | 0.172E-02 | 0.907E-02 | -0.351E-02 | 0.230E-01 | -0.376E-02 |
| 18 | 0.008 | 0.250E-02 | 0.283E-02 | 0.486E-02 | 0.644E-02 | -0.883E-02 | -0.754E-03 |
| 19 | 0.007 | -0.135E-02 | 0.224E-02 | -0.176E-01 | 0.989E-02 | 0.241E-02 | -0.237E-03 |
| 20 | 0.006 | -0.155E-02 | 0.126E-02 | 0.150E-01 | 0.434E-01 | 0.256E-01 | 0.441E-02 |



PAGE 4
PROGRAM:SAP90/FILE:cm-a-04.RIT
WHC/MPF CAMERA ASSEMBLY MODEL JOB#: 66458-01 RUN: CM-A-04

P A R T I C I P A T I N G  M A S S - (percent)

| MODE | X-DIR | Y-DIR | Z-DIR | X-SUM | Y-SUM | Z-SUM |
|---|---|---|---|---|---|---|
| 1 | 0.168 | 77.307 | 0.003 | 0.168 | 77.307 | 0.003 |
| 2 | 77.448 | 0.193 | 0.003 | 77.616 | 77.500 | 0.005 |
| 3 | 4.456 | 4.099 | 0.000 | 82.072 | 81.600 | 0.005 |
| 4 | 5.344 | 6.127 | 0.020 | 87.416 | 87.726 | 0.026 |
| 5 | 1.903 | 1.590 | 0.000 | 89.320 | 89.316 | 0.026 |
| 6 | 0.075 | 0.069 | 0.001 | 89.395 | 89.384 | 0.027 |
| 7 | 0.012 | 0.014 | 0.000 | 89.407 | 89.398 | 0.027 |
| 8 | 1.355 | 3.150 | 0.000 | 90.763 | 92.548 | 0.027 |
| 9 | 3.166 | 1.212 | 0.001 | 93.928 | 93.760 | 0.029 |
| 10 | 0.078 | 0.116 | 0.012 | 94.007 | 93.876 | 0.040 |
| 11 | 0.098 | 0.447 | 1.680 | 94.105 | 94.323 | 1.720 |
| 12 | 0.316 | 0.077 | 0.305 | 94.421 | 94.400 | 2.025 |
| 13 | 0.098 | 0.022 | 5.525 | 94.519 | 94.422 | 7.550 |
| 14 | 0.049 | 0.375 | 6.255 | 94.569 | 94.797 | 13.805 |
| 15 | 0.512 | 0.000 | 0.373 | 95.081 | 94.797 | 14.178 |
| 16 | 0.176 | 0.835 | 0.240 | 95.256 | 95.633 | 14.418 |
| 17 | 1.064 | 0.334 | 9.228 | 96.320 | 95.967 | 23.646 |
| 18 | 0.702 | 0.899 | 2.649 | 97.022 | 96.865 | 26.295 |
| 19 | 0.205 | 0.565 | 34.966 | 97.227 | 97.430 | 61.262 |
| 20 | 0.270 | 0.178 | 25.406 | 97.497 | 97.608 | 86.668 |

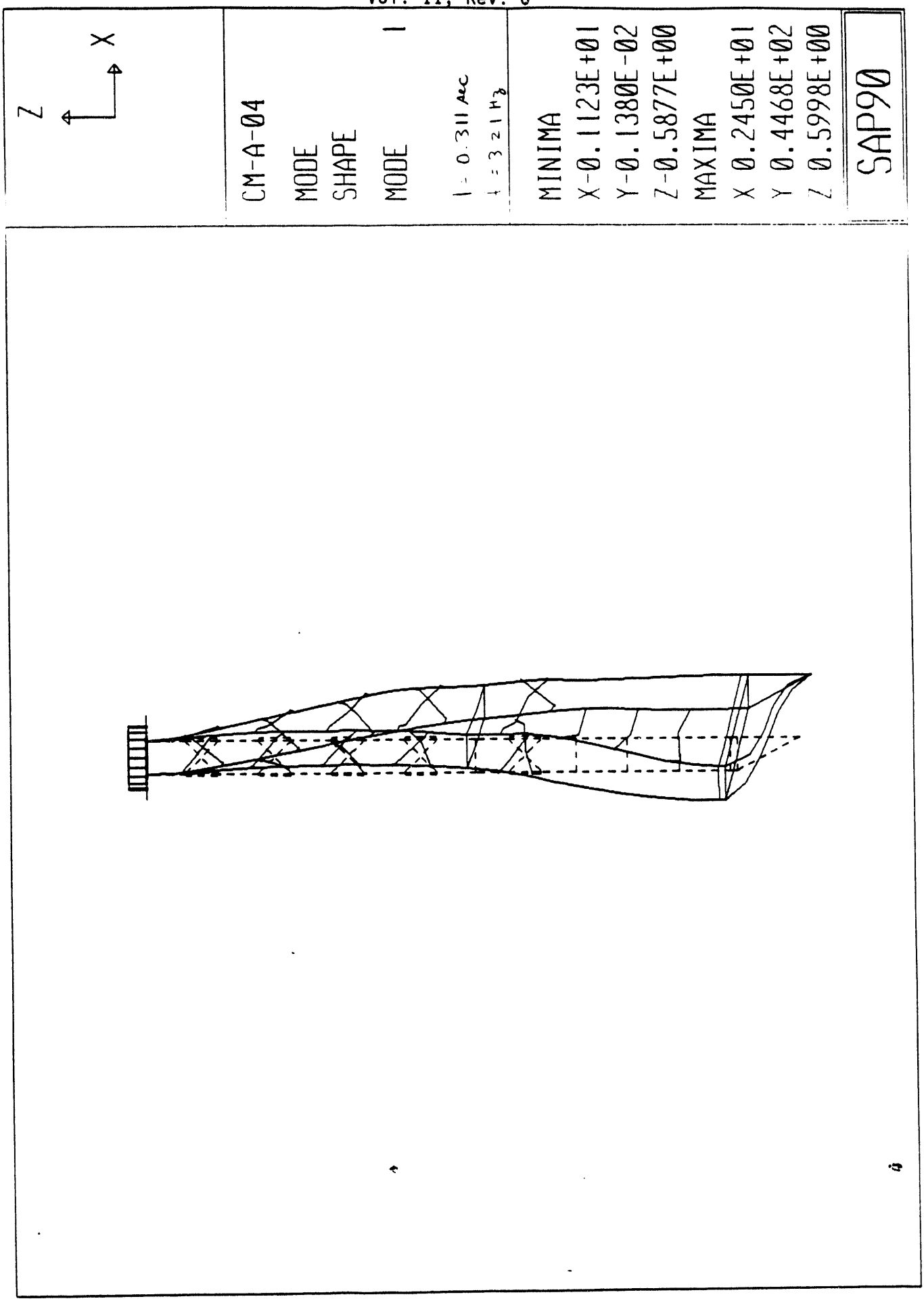
Z
X
CM-A-04
MODE
SHAPE
MODE 1
T = 0.311 sec
f = 3.21 Hz
MINIMA
X-0.1123E+01
Y-0.1380E-02
Z-0.5877E+00
MAXIMA
X 0.2450E+01
Y 0.4468E+02
Z 0.5998E+00
SAP90

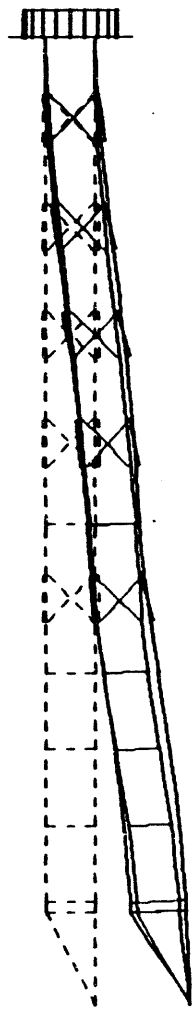

Z
X

CM-A-04

MODE
SHAPE

MODE 2

T = 0.310 sec
f = 3.23 Hz

MINIMA
X -0.1390E-02
Y -0.4730E+01
Z -0.5751E+00
MAXIMA
X 0.4464E+02
Y 0.5459E-03
Z 0.5936E+00

SAP90

547

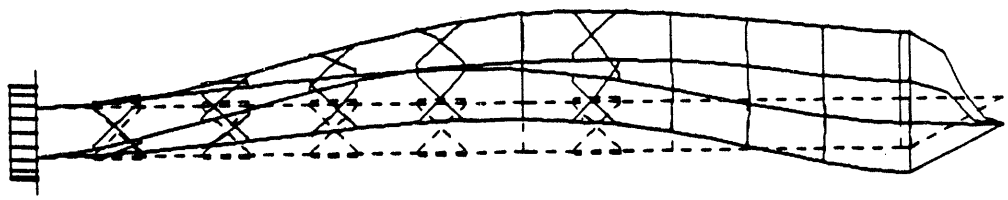
Z
X
CM-A-04
MODE
SHAPE
MODE 3
T = 0.0937 sec
f = 10.67 Hz
MINIMA
X -0.1472E+02
Y -0.1463E+02
Z -0.7984E+00
MAXIMA
X 0.5142E+02
Y 0.5042E+02
Z 0.8650E+00
SAP90

548

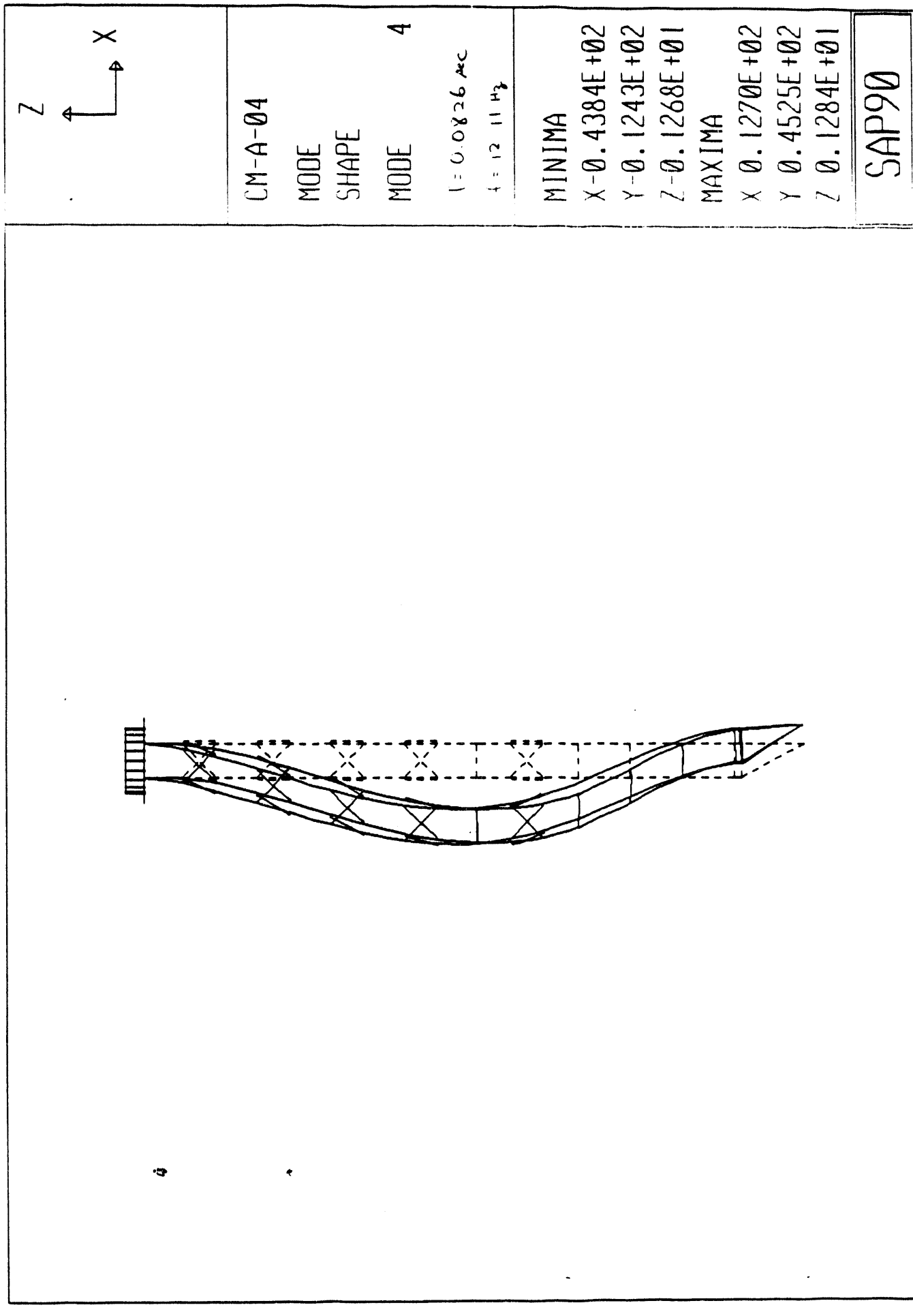
Z
X
CM-A-04
MODE
SHAPE
MODE 4
T = 0.0826 sec
f = 12.11 Hz
MINIMA
X -0.4384E+02
Y -0.1243E+02
Z -0.1268E+01
MAXIMA
X 0.1270E+02
Y 0.4525E+02
Z 0.1284E+01
SAP90

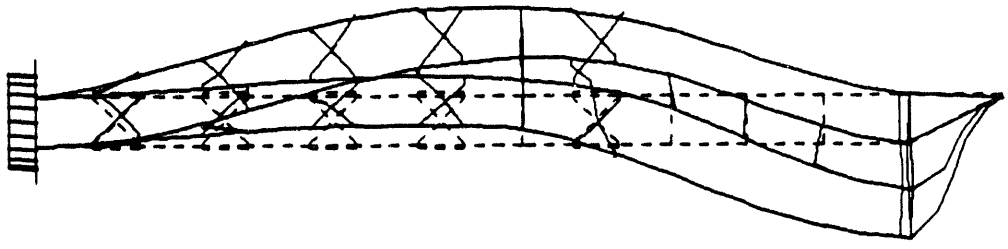
Z
X
CM-A-04
MODE
SHAPE
MODE 5
T = 0.0676 sec
f = 14.8 Hz
MINIMA
X -0.5553E+02
Y -0.5559E+02
Z -0.1478E+01
MAXIMA
X 0.5183E+02
Y 0.5086E+02
Z 0.1369E+01
SAP90

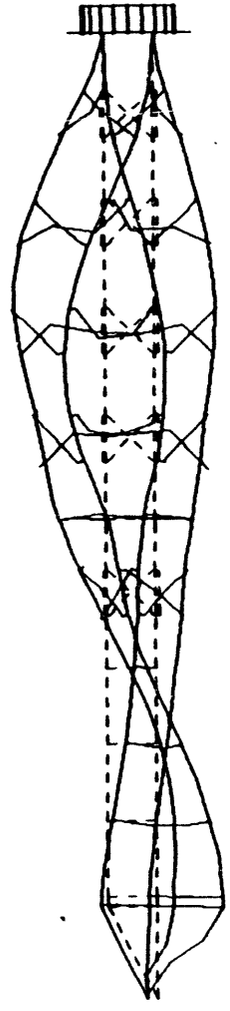

Z

X

CM-A-04

MODE
SHAPE

MODE 6

T = 0.0305 sec

f = 32.79 Hz

MINIMA
X -0.6197E+02
Y -0.5522E+02
Z -0.1778E+01
MAXIMA
X 0.4374E+02
Y 0.4295E+02
Z 0.1396E+01

SAP90

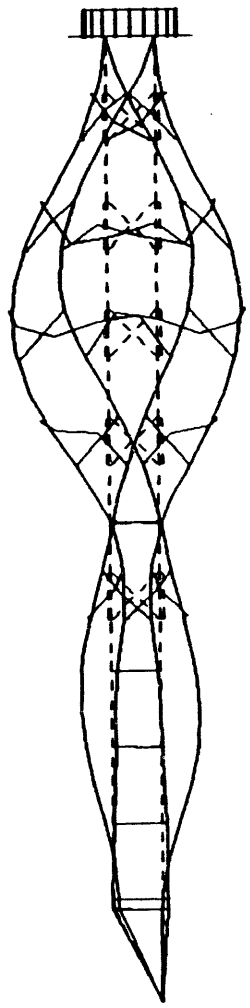

Z
X

CM-A-04

MODE
SHAPE

MODE 7

T = 0.0261 sec
f = 38.32 Hz

MINIMA
X -0.6883E+02
Y -0.7503E+02
Z -0.1478E+01
MAXIMA
X 0.6173E+02
Y 0.6454E+02
Z 0.1330E+01

SAP90

5 4 12

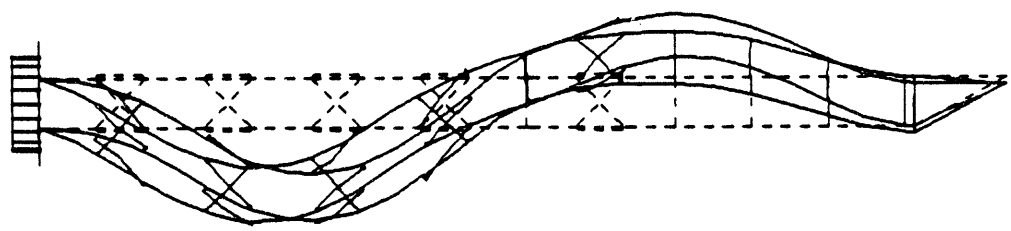
Z
X
CM-A-04
MODE
SHAPE
MODE 8
T= 0.0254 sec
f= 39.36 Hz
MINIMA
X -0.5074E+02
Y -0.5014E+02
Z -0.2454E+01
MAXIMA
X 0.3752E+02
Y 0.7550E+02
Z 0.2256E+01
SAP90

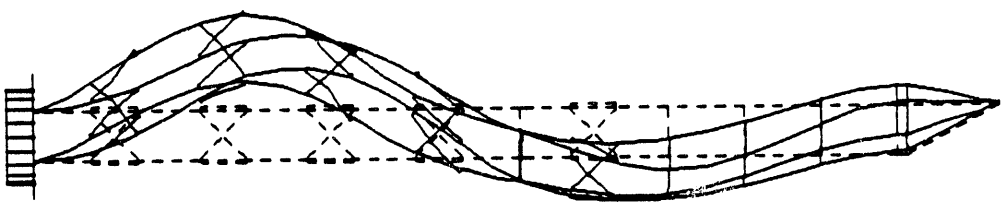
Z
X
CM-A-04
MODE
SHAPE
MODE 9
T = 0.0251 sec
f = 39.91 Hz
MINIMA
X -0.5218E+02
Y -0.3641E+02
Z -0.2816E+01
MAXIMA
X 0.7910E+02
Y 0.6437E+02
Z 0.2513E+01
SAP90

5 4 14

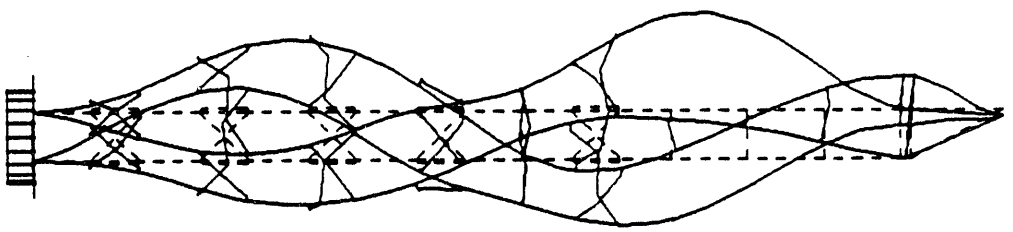
Z
X
CM-A-04
MODE
SHAPE
MODE 10
T= 0.0214 sec
f= 46.66 Hz
MINIMA
X-0.4920E+02
Y-0.4765E+02
Z-0.3086E+01
MAXIMA
X 0.7057E+02
Y 0.6445E+02
Z 0.3547E+01
SAP90

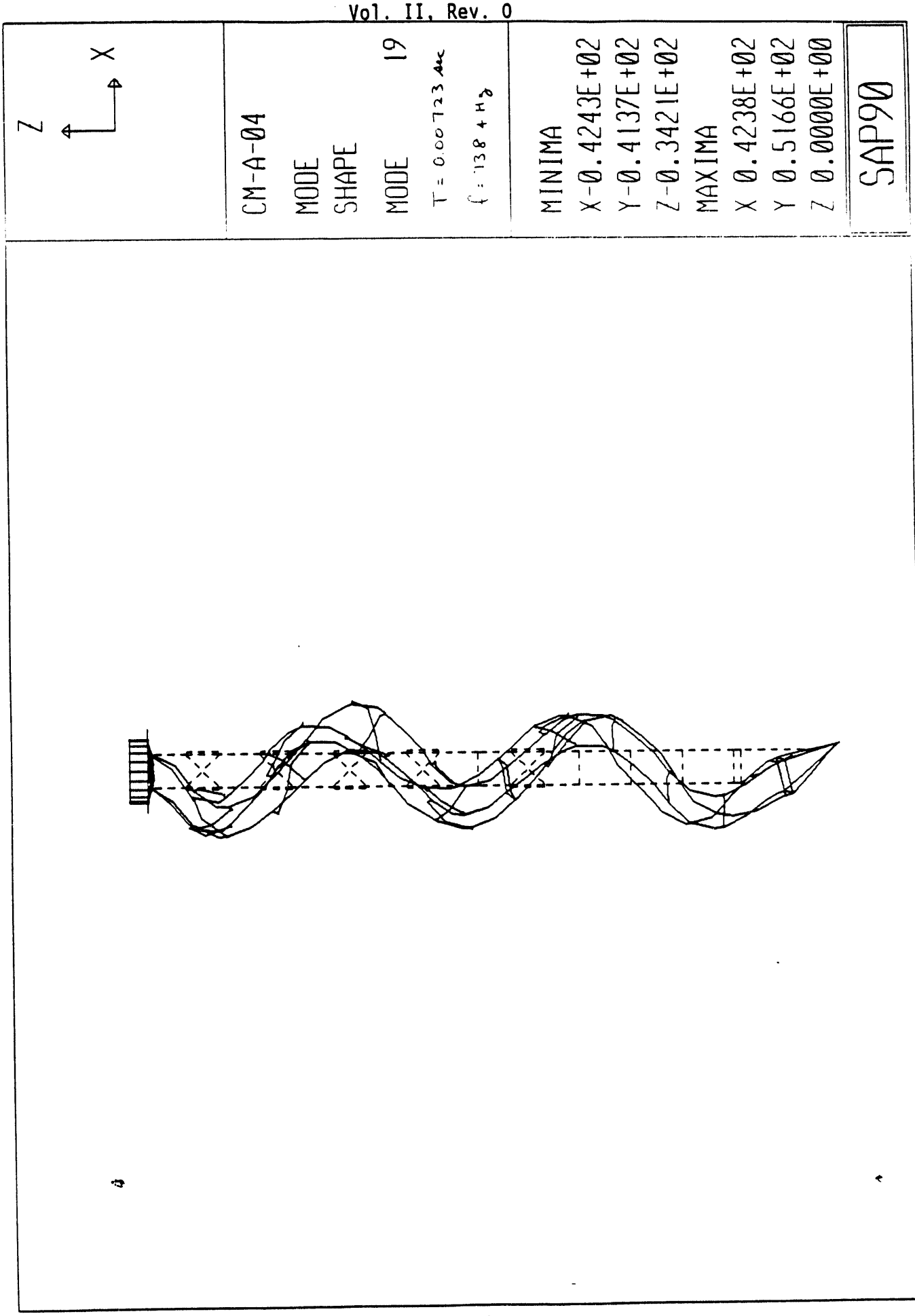
Z
X
CM-A-04
MODE
SHAPE
MODE 19
T = 0.00723 sec
f = 138.4 Hz
MINIMA
X -0.4243E+02
Y -0.4137E+02
Z -0.3421E+02
MAXIMA
X 0.4238E+02
Y 0.5166E+02
Z 0.0000E+00
SAP90

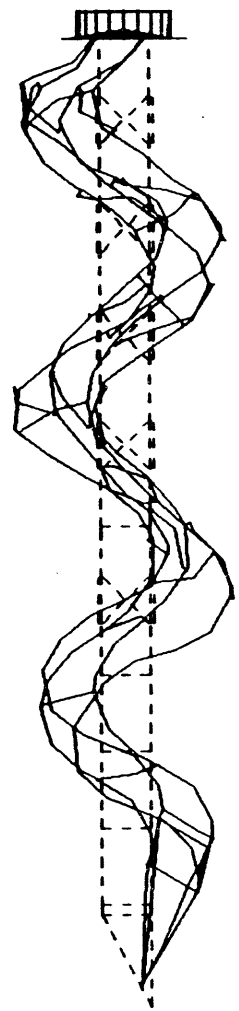

Z

X

CM-A-04

MODE
SHAPE

MODE 20

T = 0.00612 sec

f = 163.4 Hz

MINIMA
X -0.4580E+02
Y -0.4204E+02
Z 0.0000E+00
MAXIMA
X 0.4175E+02
Y 0.3985E+02
Z 0.4982E+02

SAP90

```
      $$$$$$$$     $$$$$$$$$$    $$$$$$$        $$$$$$$$      $$$$$$$
    $$$$$$$$$$    $$$$$$$$$$    $$$$$$$$$$    $$$$$$$$$$$    $$$$$$$$$$
   $$           $$      $$    $$       $$   $$       $$    $$       $$
  $$           $$      $$    $$       $$   $$       $$    $$       $$
  $$$$$$$$     $$$$$$$$$$    $$$$$$$$$$     $$$$$$$$$$    $$       $$
        $$    $$      $$    $$                     $$    $$       $$
       $$    $$      $$    $$                     $$    $$       $$
$$$$$$$$$$    $$      $$    $$            $$$$$$$$$$     $$$$$$$$$$
$$$$$$$$     $$      $$    $$             $$$$$$$$        $$$$$$$
```

STRUCTURAL ANALYSIS PROGRAMS

VERSION P5.40

Copyright (C) 1978-1992
EDWARD L. WILSON
All rights reserved

PAGE 1
PROGRAM:SAP90/FILE:CM-B-01.RIT

WHC/MPF CAMERA ASSEMBLY MODEL JOB#: 66458-01 RUN: CM-B-01

R I T Z  S Y S T E M  P A R A M E T E R S .

| | | |
|---|---|---|
| NUMBER OF EQUATIONS | = | 1770 |
| NUMBER OF MASSES | = | 885 |
| NUMBER OF RITZ VECTORS | = | 20 |
| NUMBER OF DIRECTION VECTORS | = | 3 |



PAGE 2
PROGRAM:SAP90/FILE:CM-B-01.RIT

WHC/MPF CAMERA ASSEMBLY MODEL JOB#: 66458-01 RUN: CM-B-01

E I G E N V A L U E S  A N D  F R E Q U E N C I E S

| MODE NUMBER | EIGENVALUE (RAD/SEC)**2 | CIRCULAR FREQ (RAD/SEC) | FREQUENCY (CYCLES/SEC) | PERIOD (SEC) |
|---|---|---|---|---|
| 1 | 0.399807E+03 | 0.199952E+02 | 3.182332 | 0.314235 |
| 2 | 0.404339E+03 | 0.201082E+02 | 3.200315 | 0.312469 |
| 3 | 0.433177E+04 | 0.658162E+02 | 10.474971 | 0.095466 |
| 4 | 0.557312E+04 | 0.746533E+02 | 11.881447 | 0.084165 |
| 5 | 0.831171E+04 | 0.911686E+02 | 14.509932 | 0.068918 |
| 6 | 0.299173E+05 | 0.172966E+03 | 27.528432 | 0.036326 |
| 7 | 0.299606E+05 | 0.173091E+03 | 27.548343 | 0.036300 |
| 8 | 0.405712E+05 | 0.201423E+03 | 32.057469 | 0.031194 |
| 9 | 0.579230E+05 | 0.240672E+03 | 38.304137 | 0.026107 |
| 10 | 0.593899E+05 | 0.243700E+03 | 38.786130 | 0.025782 |
| 11 | 0.607981E+05 | 0.246573E+03 | 39.243256 | 0.025482 |
| 12 | 0.815664E+05 | 0.285598E+03 | 45.454396 | 0.022000 |
| 13 | 0.995993E+05 | 0.315594E+03 | 50.228270 | 0.019909 |
| 14 | 0.128916E+06 | 0.359049E+03 | 57.144468 | 0.017500 |
| 15 | 0.207535E+06 | 0.455560E+03 | 72.504645 | 0.013792 |
| 16 | 0.240859E+06 | 0.490774E+03 | 78.109064 | 0.012803 |
| 17 | 0.495304E+06 | 0.703778E+03 | 112.009784 | 0.008928 |
| 18 | 0.890902E+06 | 0.943876E+03 | 150.222542 | 0.006657 |
| 19 | 0.137611E+07 | 0.117308E+04 | 186.700937 | 0.005356 |
| 20 | 0.158802E+07 | 0.126016E+04 | 200.561440 | 0.004986 |

PAGE 3
PROGRAM:SAP90/FILE:CM-B-01.RIT
WHC/MPF CAMERA ASSEMBLY MODEL JOB#: 66458-01 RUN: CM-B-01

B A S E  F O R C E  R E A C T I O N  F A C T O R S

| MODE # | PERIOD (sec) | X DIRECTION | Y DIRECTION | Z DIRECTION | X MOMENT | Y MOMENT | Z MOMENT |
|---|---|---|---|---|---|---|---|
| 1 | 0.314 | 0.204E-04 | 0.263E-01 | -0.157E-03 | 0.487E+01 | 0.328E-02 | 0.855E-01 |
| 2 | 0.312 | 0.264E-01 | -0.108E-03 | 0.133E-03 | -0.283E-02 | -0.487E+01 | 0.870E-01 |
| 3 | 0.095 | 0.724E-02 | 0.698E-02 | 0.303E-04 | 0.205E+00 | -0.230E+00 | -0.137E+00 |
| 4 | 0.084 | -0.859E-02 | 0.911E-02 | 0.408E-03 | 0.168E+00 | 0.123E+00 | 0.147E-01 |
| 5 | 0.069 | 0.608E-02 | 0.565E-02 | -0.401E-04 | -0.145E-01 | -0.602E-02 | 0.122E+00 |
| 6 | 0.036 | -0.126E+00 | 0.173E-01 | -0.161E-02 | 0.194E+00 | 0.141E+01 | 0.148E+00 |
| 7 | 0.036 | 0.172E-01 | 0.126E+00 | 0.355E-03 | 0.142E+01 | -0.195E+00 | 0.107E+01 |
| 8 | 0.031 | -0.170E-02 | -0.162E-02 | 0.963E-04 | 0.350E-02 | -0.285E-02 | -0.843E-01 |
| 9 | 0.026 | -0.375E-02 | 0.562E-02 | 0.307E-04 | 0.441E-01 | 0.468E-01 | 0.933E-01 |
| 10 | 0.026 | 0.503E-02 | 0.270E-02 | 0.313E-03 | 0.178E-01 | -0.474E-01 | 0.391E-01 |
| 11 | 0.025 | 0.228E-02 | 0.205E-02 | -0.559E-05 | 0.631E-01 | -0.280E-01 | 0.212E-01 |
| 12 | 0.022 | 0.107E-02 | 0.139E-02 | -0.441E-03 | 0.565E-01 | -0.440E-01 | 0.524E-01 |
| 13 | 0.020 | -0.107E-02 | 0.222E-02 | -0.416E-02 | 0.115E+00 | 0.939E-01 | 0.348E-01 |
| 14 | 0.017 | -0.839E-03 | -0.160E-03 | -0.233E-02 | 0.135E-01 | 0.526E-01 | 0.120E-02 |
| 15 | 0.014 | 0.911E-04 | -0.132E-02 | 0.126E-01 | -0.149E+00 | -0.146E+00 | -0.176E-02 |
| 16 | 0.013 | 0.608E-03 | 0.136E-04 | -0.623E-02 | -0.289E-02 | -0.804E-02 | 0.508E-03 |
| 17 | 0.009 | 0.144E-02 | 0.827E-04 | -0.373E-01 | -0.451E-02 | 0.201E+00 | 0.135E-01 |
| 18 | 0.007 | 0.754E-02 | 0.951E-03 | -0.124E+00 | 0.113E+00 | 0.339E+00 | 0.568E-02 |
| 19 | 0.005 | 0.272E-01 | 0.241E-01 | 0.228E-01 | 0.270E+01 | -0.328E+01 | 0.308E+00 |
| 20 | 0.005 | 0.263E-01 | -0.299E-01 | 0.128E-01 | -0.335E+01 | -0.307E+01 | -0.384E+00 |



PAGE 4
PROGRAM:SAP90/FILE:CM-B-01.RIT
WHC/MPF CAMERA ASSEMBLY MODEL JOB#: 66458-01 RUN: CM-B-01

P A R T I C I P A T I N G  M A S S - (percent)

| MODE | X-DIR | Y-DIR | Z-DIR | X-SUM | Y-SUM | Z-SUM |
|---|---|---|---|---|---|---|
| 1 | 0.000 | 3.466 | 0.000 | 0.000 | 3.466 | 0.000 |
| 2 | 3.474 | 0.000 | 0.000 | 3.474 | 3.466 | 0.000 |
| 3 | 0.262 | 0.243 | 0.000 | 3.737 | 3.710 | 0.000 |
| 4 | 0.369 | 0.415 | 0.001 | 4.105 | 4.125 | 0.001 |
| 5 | 0.185 | 0.159 | 0.000 | 4.290 | 4.284 | 0.001 |
| 6 | 79.650 | 1.494 | 0.013 | 83.940 | 5.779 | 0.014 |
| 7 | 1.485 | 79.807 | 0.001 | 85.426 | 85.586 | 0.015 |
| 8 | 0.014 | 0.013 | 0.000 | 85.440 | 85.599 | 0.015 |
| 9 | 0.070 | 0.158 | 0.000 | 85.510 | 85.757 | 0.015 |
| 10 | 0.127 | 0.037 | 0.000 | 85.637 | 85.793 | 0.015 |
| 11 | 0.026 | 0.021 | 0.000 | 85.663 | 85.814 | 0.015 |
| 12 | 0.006 | 0.010 | 0.001 | 85.669 | 85.824 | 0.016 |
| 13 | 0.006 | 0.025 | 0.086 | 85.674 | 85.848 | 0.103 |
| 14 | 0.004 | 0.000 | 0.027 | 85.678 | 85.848 | 0.130 |
| 15 | 0.000 | 0.009 | 0.791 | 85.678 | 85.857 | 0.921 |
| 16 | 0.002 | 0.000 | 0.194 | 85.680 | 85.857 | 1.115 |
| 17 | 0.010 | 0.000 | 6.948 | 85.690 | 85.857 | 8.063 |
| 18 | 0.284 | 0.005 | 77.174 | 85.974 | 85.862 | 85.237 |
| 19 | 3.711 | 2.898 | 2.609 | 89.685 | 88.760 | 87.846 |
| 20 | 3.448 | 4.470 | 0.816 | 93.133 | 93.230 | 88.662 |





5419

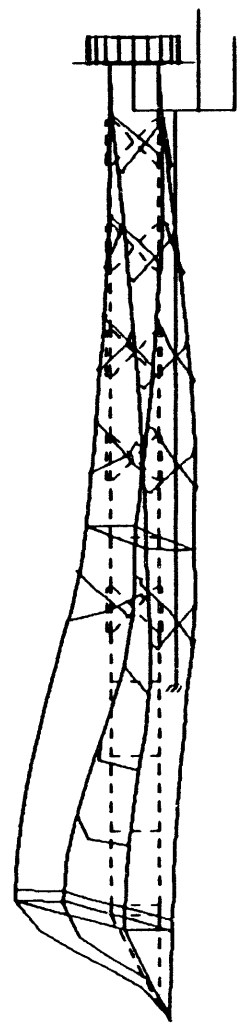

Z
X

CM-B-01

MODE
SHAPE

MODE 1

T = 0.314 sec
f = 3.182 Hz

MINIMA
X -0.2870E+01
Y -0.3321E-01
Z -0.5744E+00
MAXIMA
X 0.1325E+01
Y 0.4437E+02
Z 0.5858E+00

SAP90

5 of 21

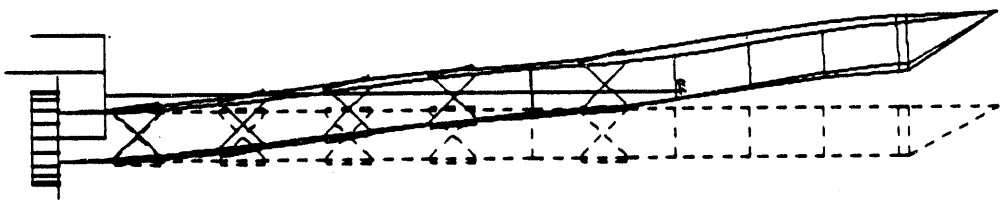


CM-B-01
MODE
SHAPE
MODE 2
T= 0.312 sec
f = 3.205 Hz

MINIMA
X -0.2919E-01
Y -0.2833E+01
Z -0.5636E+00
MAXIMA
X 0.4438E+02
Y 0.8233E+00
Z 0.5744E+00

SAP90

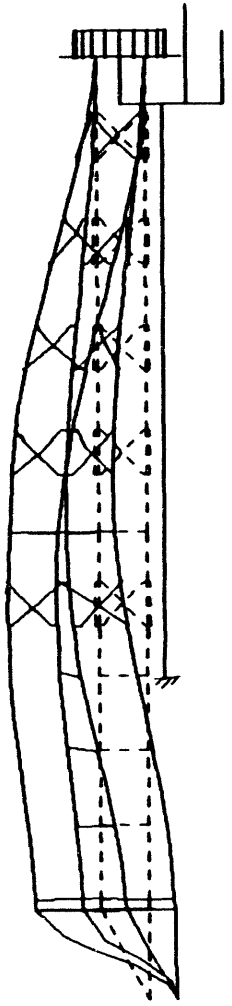

Z

X

CM-B-01

MODE
SHAPE

MODE 3

T = 0.0755 sec
f = 10.475 Hz

MINIMA
X -0.5025E+02
Y -0.4931E+02
Z -0.8486E+00
MAXIMA
X 0.1494E+02
Y 0.1485E+02
Z 0.7764E+00

SAP90

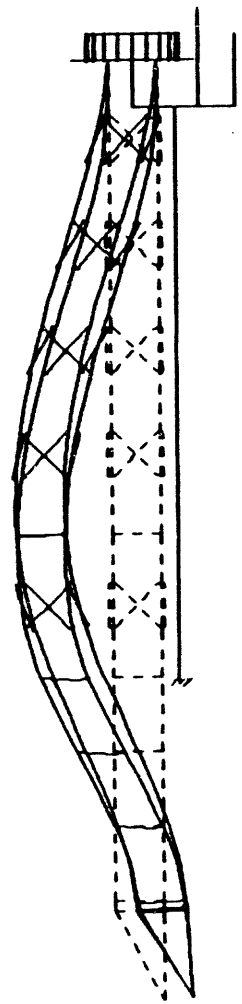

Z

X

CM-B-01

MODE
SHAPE

MODE 4

MINIMA
X -0.4286E+02
Y -0.1264E+02
Z -0.1267E+01
MAXIMA
X 0.1293E+02
Y 0.4417E+02
Z 0.1267E+01

SAP90

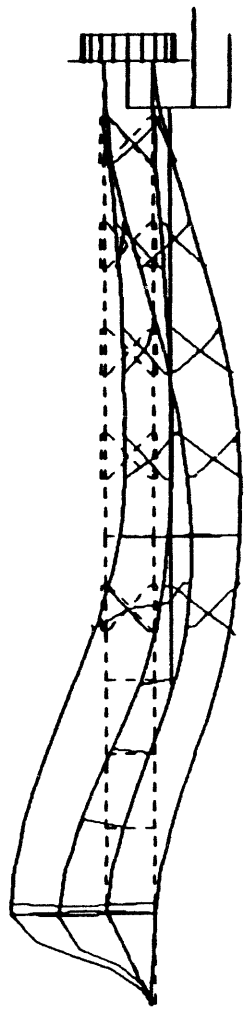

Z
X

CM-B-01

MODE
SHAPE

MODE 5

T = 0.0691 sec
F = 14.51 Hz

MINIMA
X -0.5444E+02
Y -0.5452E+02
Z -0.1452E+01
MAXIMA
X 0.5078E+02
Y 0.4991E+02
Z 0.1370E+01

SAP90

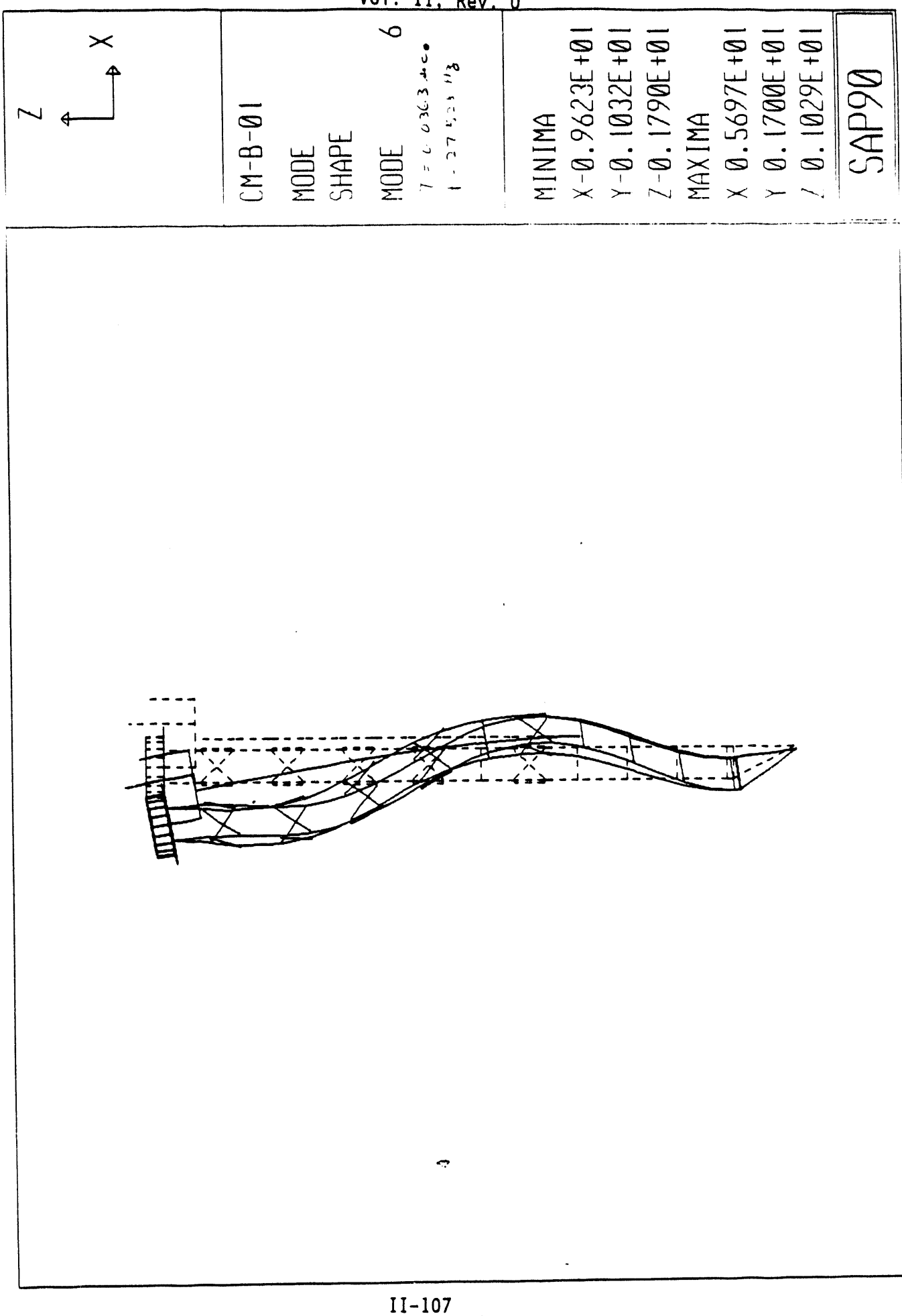
Z
X
CM-B-01
MODE
SHAPE
MODE 6
MINIMA
X-0.9623E+01
Y-0.1032E+01
Z-0.1790E+01
MAXIMA
X 0.5697E+01
Y 0.1700E+01
Z 0.1029E+01
SAP90

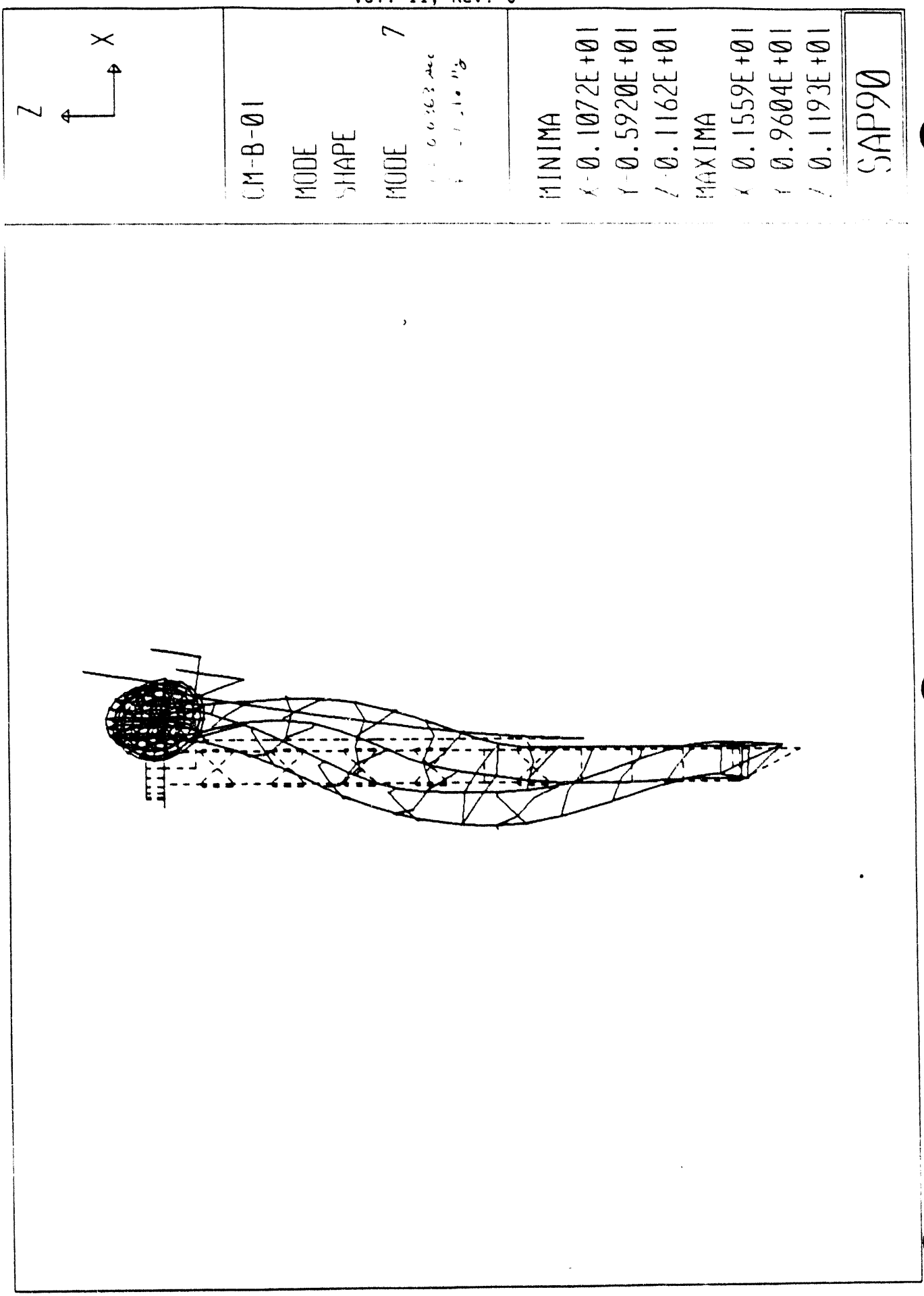
Z
X
CM-B-01
MODE
SHAPE
MODE 7
MINIMA
X-0.1072E+01
Y-0.5920E+01
Z-0.1162E+01
MAXIMA
X 0.1559E+01
Y 0.9604E+01
Z 0.1193E+01
SAP90

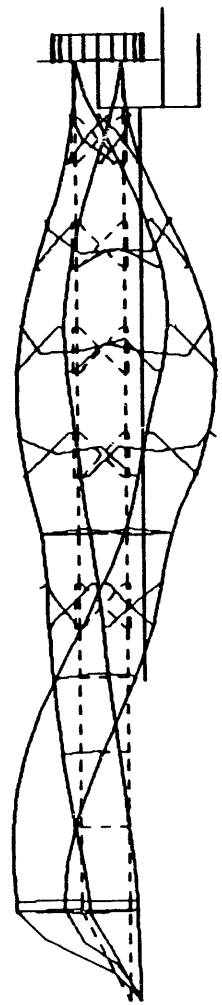

Z
X

CM-B-01

MODE
SHAPE

MODE 8

T = 0.03119 sec
f 32.057 Hz

MINIMA
X-0.4295E+02
Y-0.4177E+02
Z-0.1405E+01
MAXIMA
X 0.6108E+02
Y 0.5447E+02
Z 0.1749E+01

SAP90

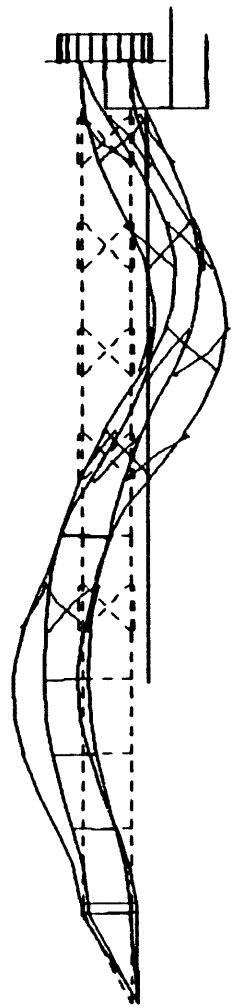

Z

X

CM-B-01

MODE
SHAPE

MODE 9

T = 0.0261 sec

f = 38.324 Hz

MINIMA
X -0.3745E+02
Y -0.7009E+02
Z -0.2355E+01
MAXIMA
X 0.5167E+02
Y 0.5166E+02
Z 0.2284E+01

SAP90

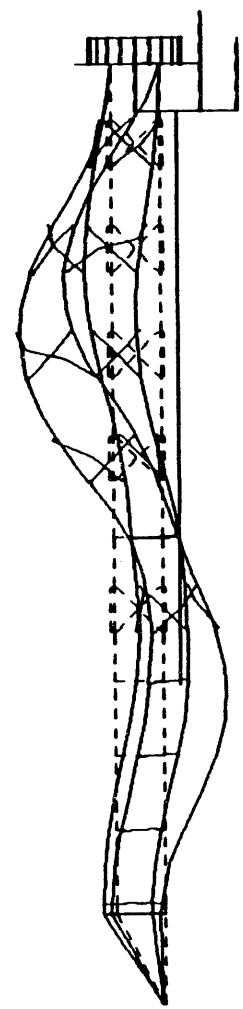

Z
X

CM-B-01

MODE
SHAPE

MODE 10

T 0.0258 sec
f 38.786 Hz

MINIMA
X -0.9998E+02
Y -0.5506E+02
Z -0.3097E+01
MAXIMA
X 0.6668E+02
Y 0.3440E+02
Z 0.2901E+01

SAP90

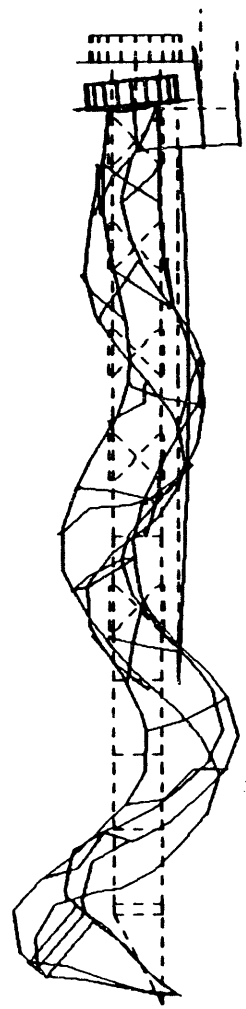

Z

X

CM-B-01

MODE
SHAPE -

MODE 18

T = 0.0666 sec
f = 15.02 Hz

MINIMA
X -0.1798E+02
Y -0.2113E+02
Z -0.1177E+02
MAXIMA
X 0.1784E+02
Y 0.1861E+02
Z 0.1534E+01

SAP90

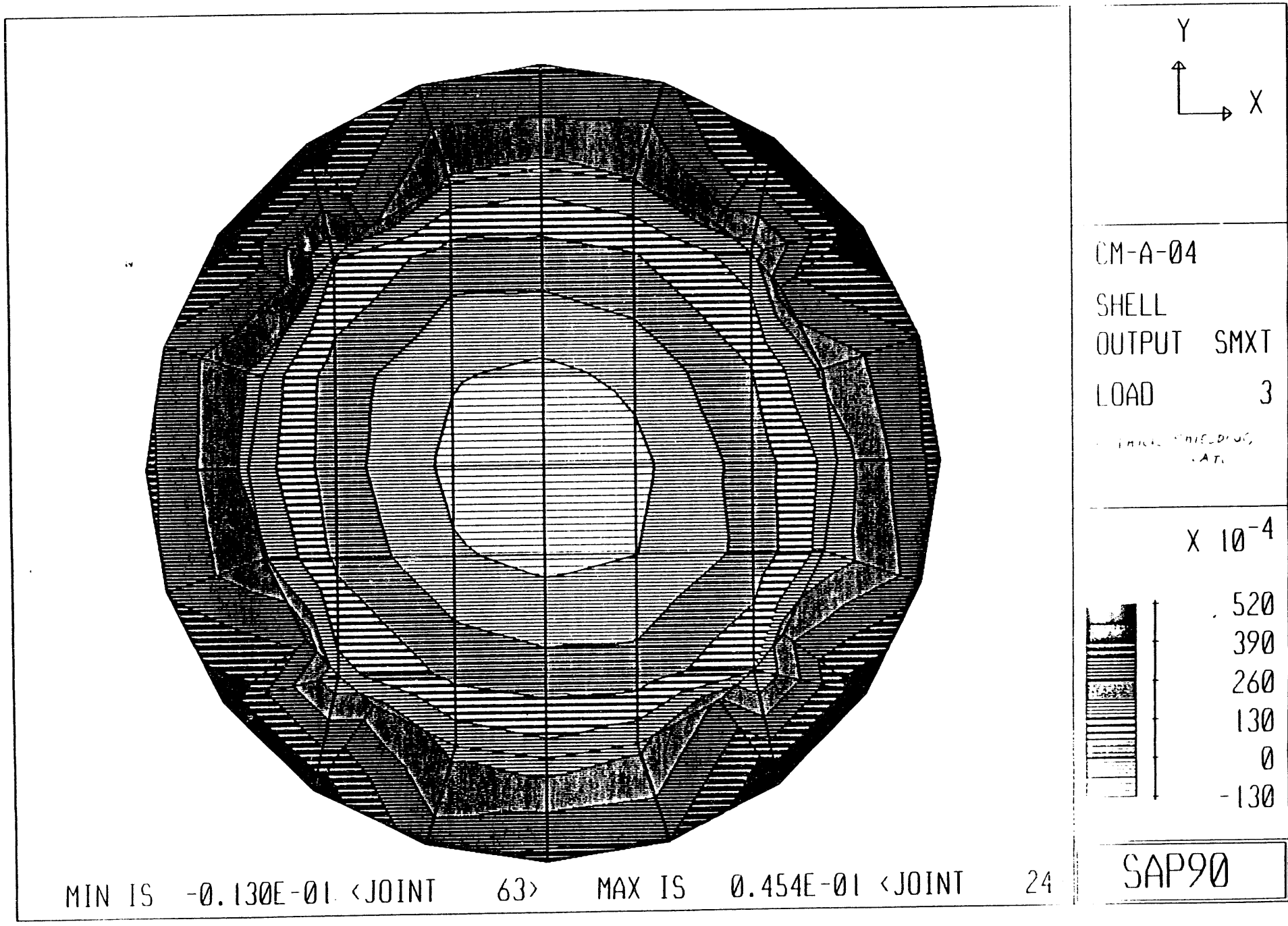
Y
X
CM-A-04
SHELL
OUTPUT SMXT
LOAD 3
X 10^-4
520
390
260
130
0
-130
SAP90
MIN IS -0.130E-01 <JOINT 63> MAX IS 0.454E-01 <JOINT 24

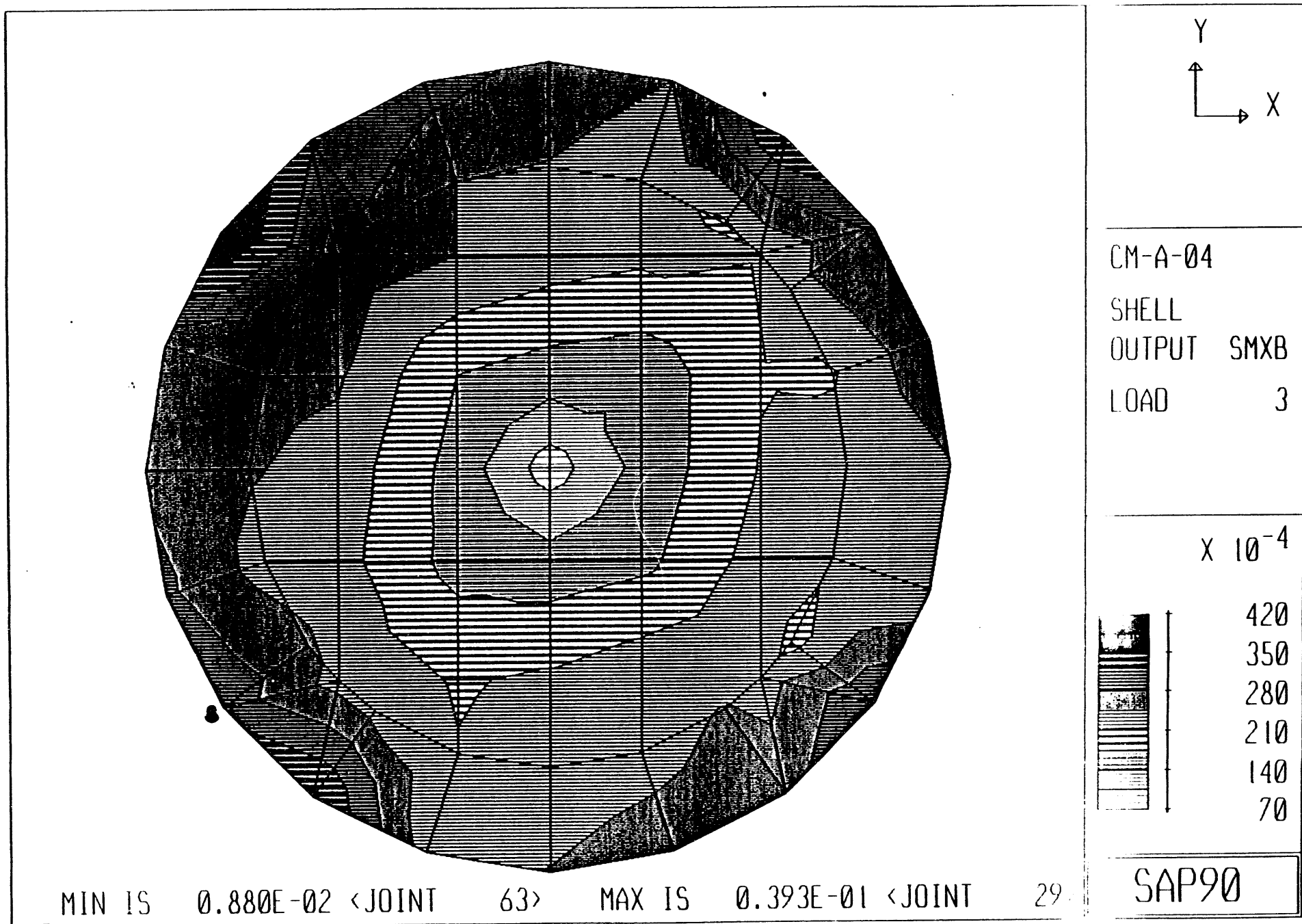
Y
X
CM-A-04
SHELL
OUTPUT SMXB
LOAD 3
X 10^-4
420
350
280
210
140
70
SAP90
MIN IS 0.880E-02 <JOINT 63> MAX IS 0.393E-01 <JOINT 29>

5.4.33

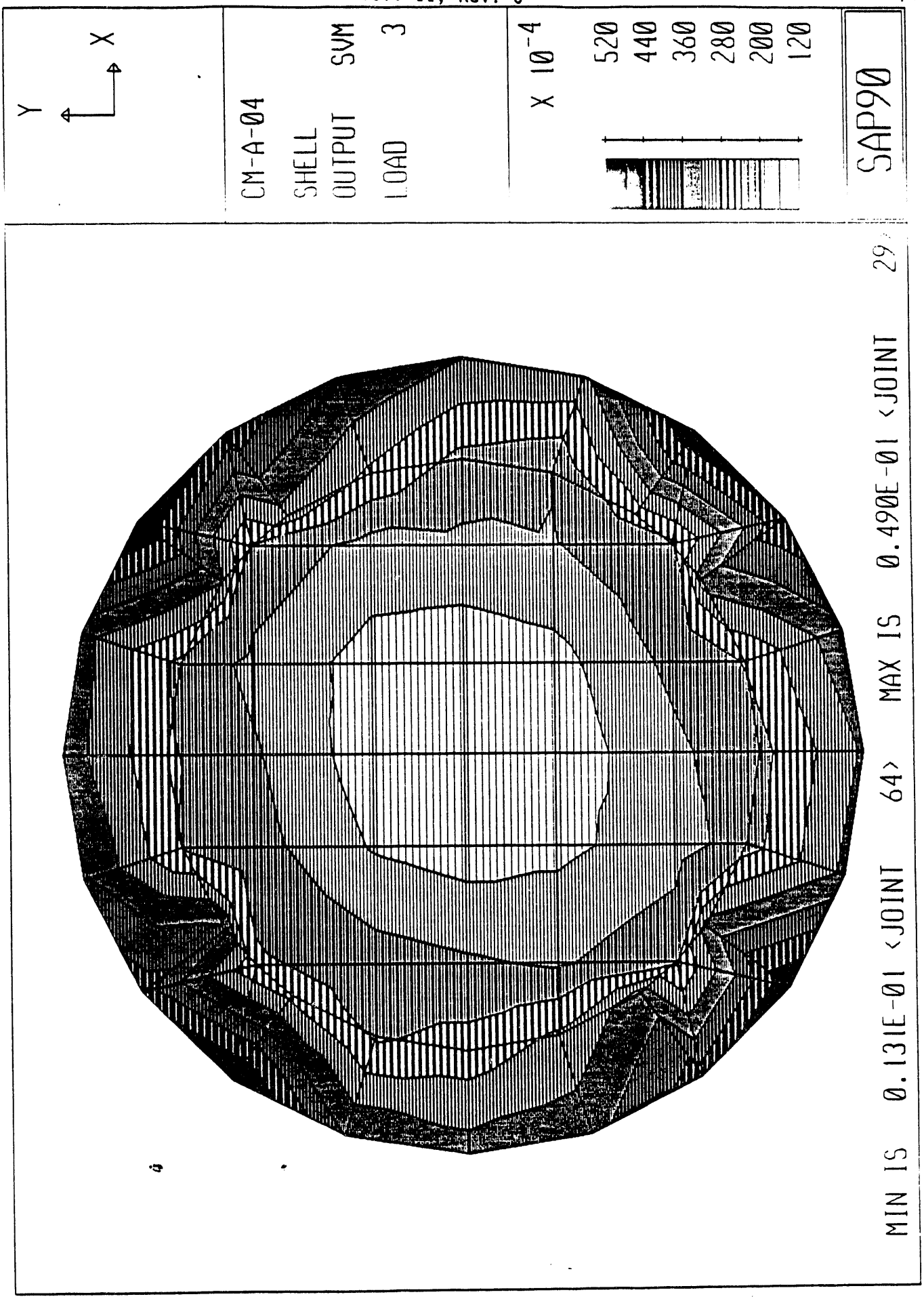
Y
X
CM-A-04
SHELL
OUTPUT SVM
LOAD 3
X 10^-4
520
440
360
280
200
120
SAP90
MIN IS 0.131E-01 <JOINT 64>
MAX IS 0.490E-01 <JOINT 29

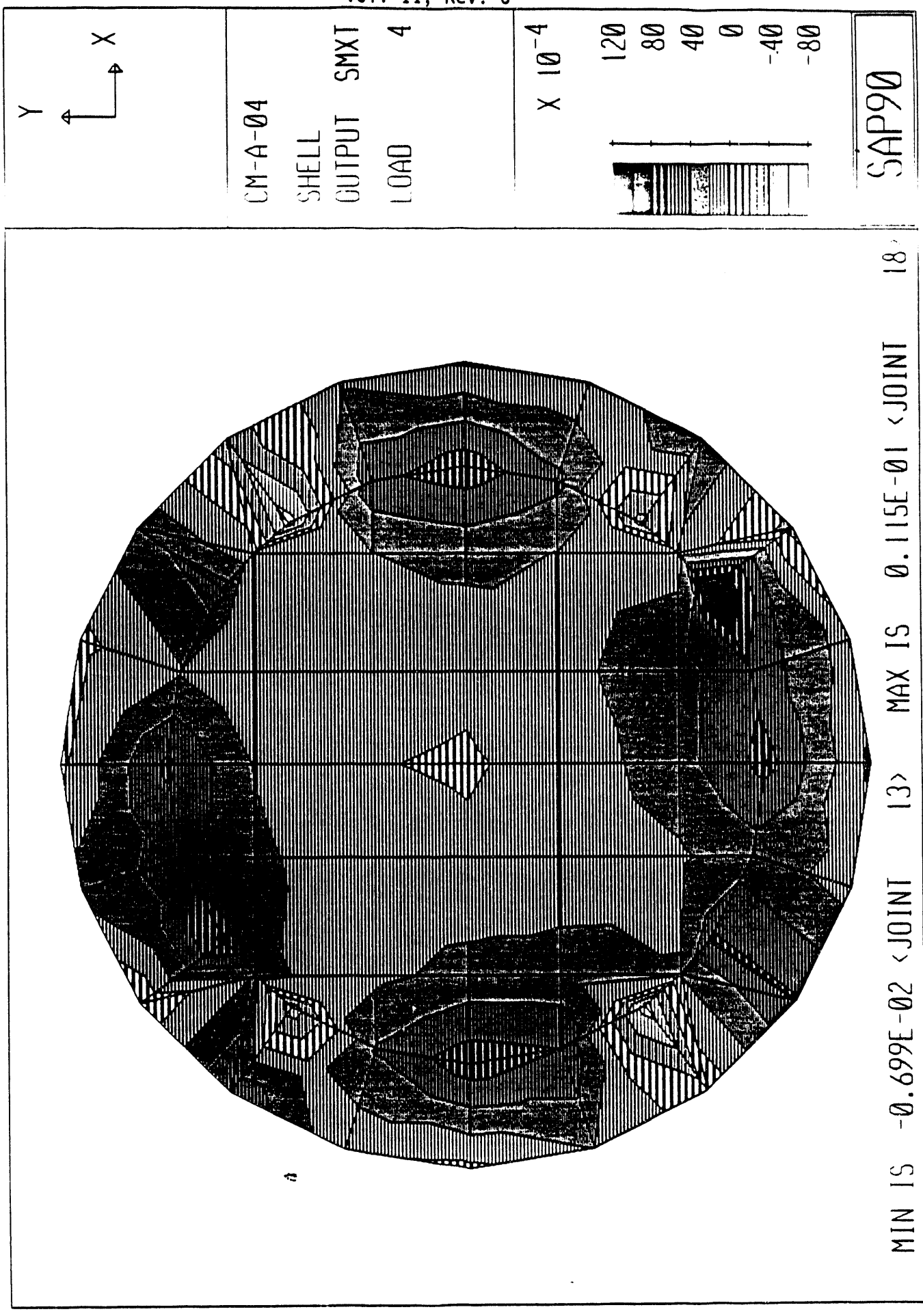
Y
X
CM-A-04
SHELL
OUTPUT SMXT
LOAD 4
X 10^-4
120
80
40
0
-40
-80
SAP90
MIN IS -0.699E-02 <JOINT 13>
MAX IS 0.115E-01 <JOINT 18>

5.4.35

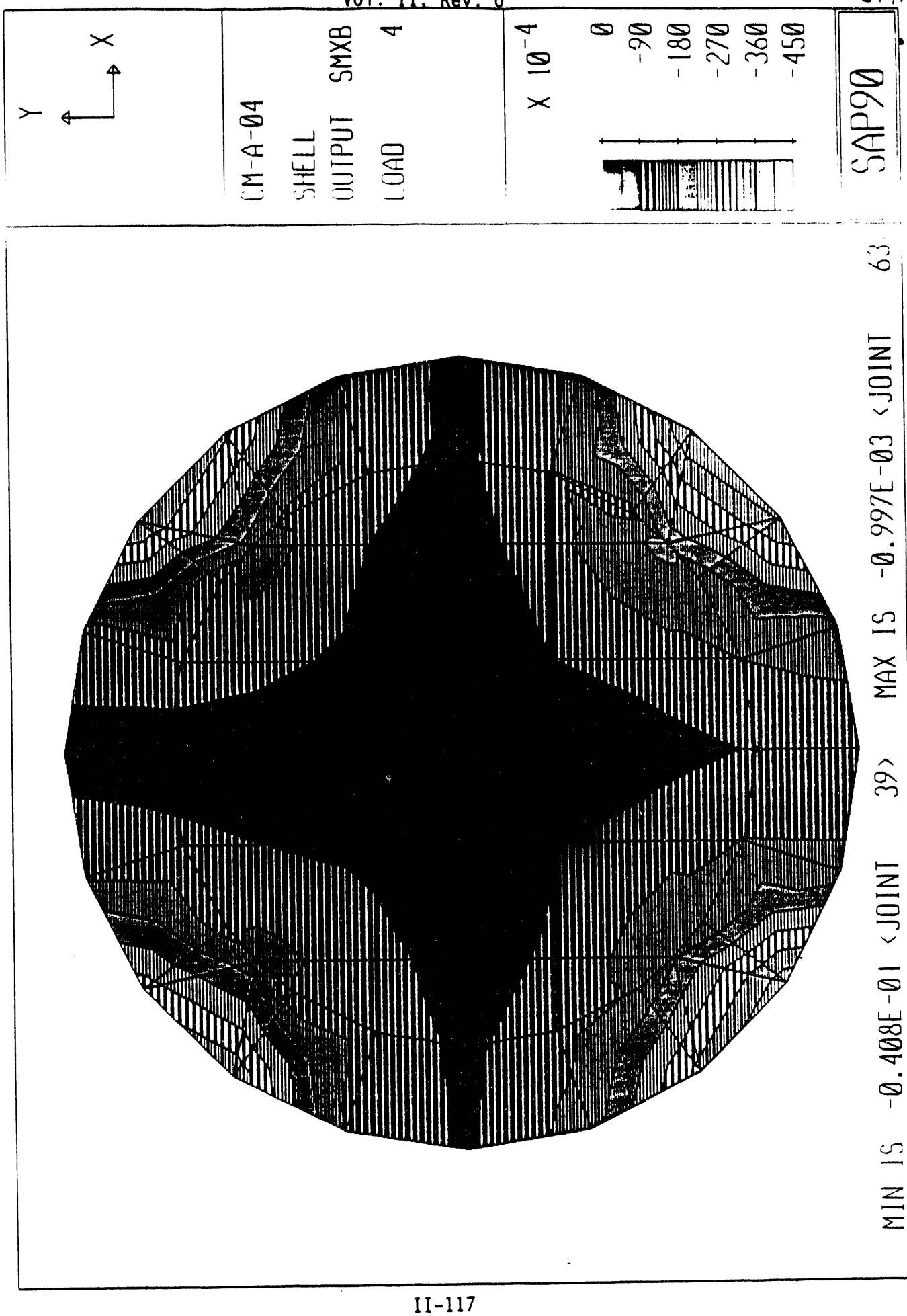
Y
X
CM-A-04
SHELL
OUTPUT SMXB
LOAD 4
X 10^-4
0
-90
-180
-270
-360
-450
SAP90
MIN IS -0.408E-01 <JOINT 39>
MAX IS -0.997E-03 <JOINT 63

5.4.36

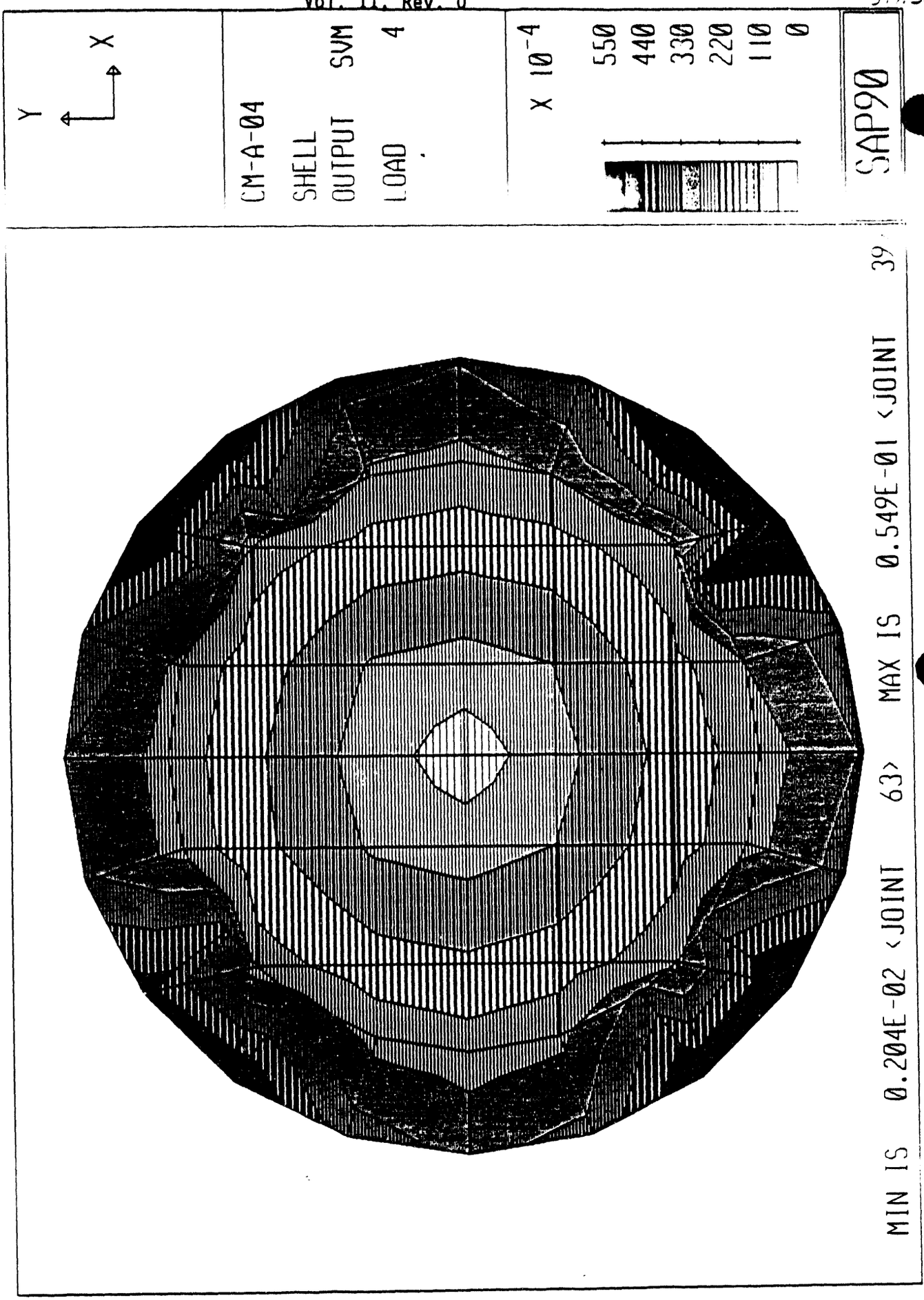
Y
X
CM-A-04
SHELL
OUTPUT SVM
LOAD 4
X 10^-4
550
440
330
220
110
0
SAP90
MIN IS 0.204E-02 <JOINT 63>
MAX IS 0.549E-01 <JOINT 39

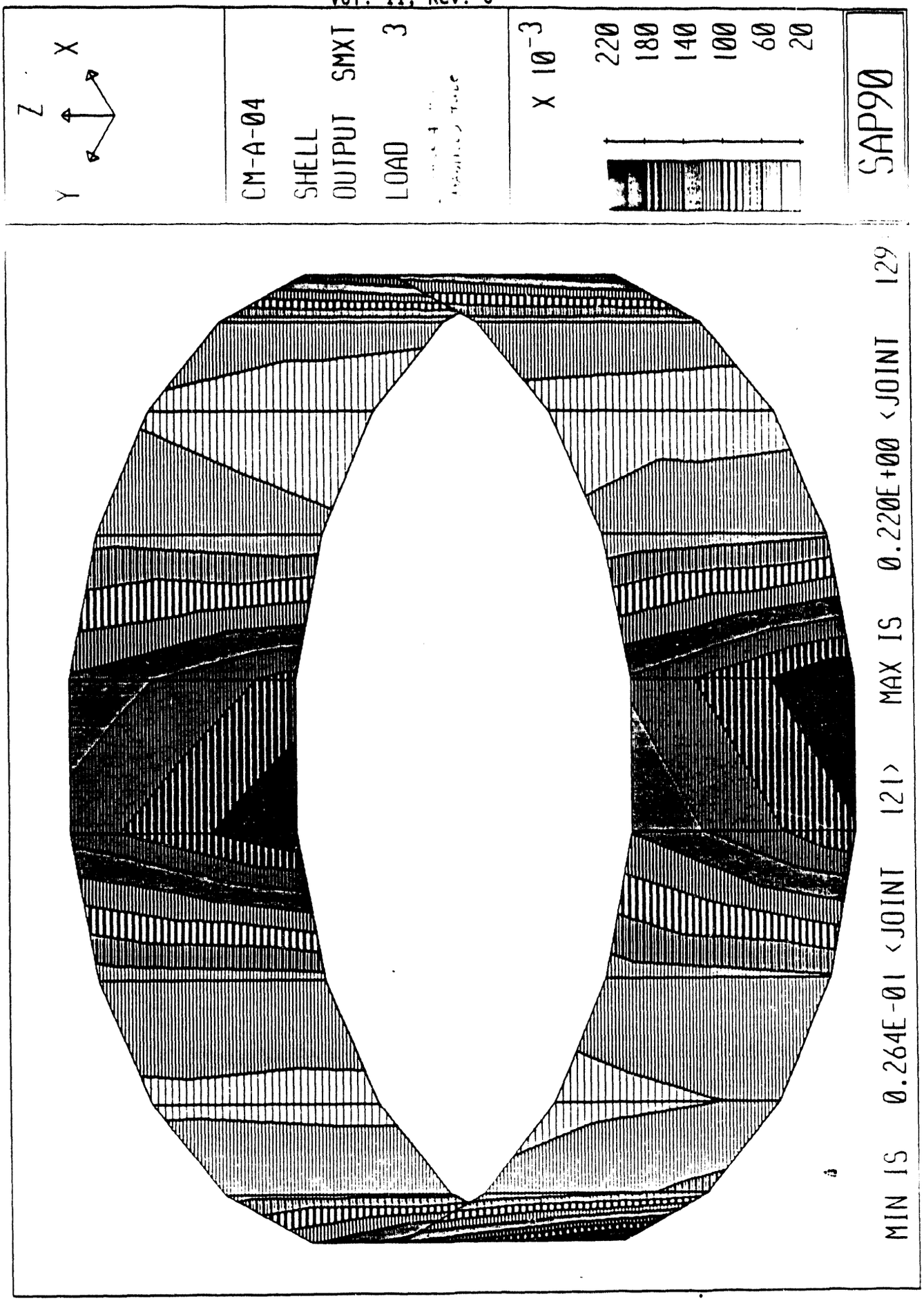
Z
X
Y
CM-A-04
SHELL
OUTPUT SMXT
LOAD 3
X 10^-3
220
180
140
100
60
20
SAP90
MIN IS 0.264E-01 <JOINT 121>
MAX IS 0.220E+00 <JOINT 129

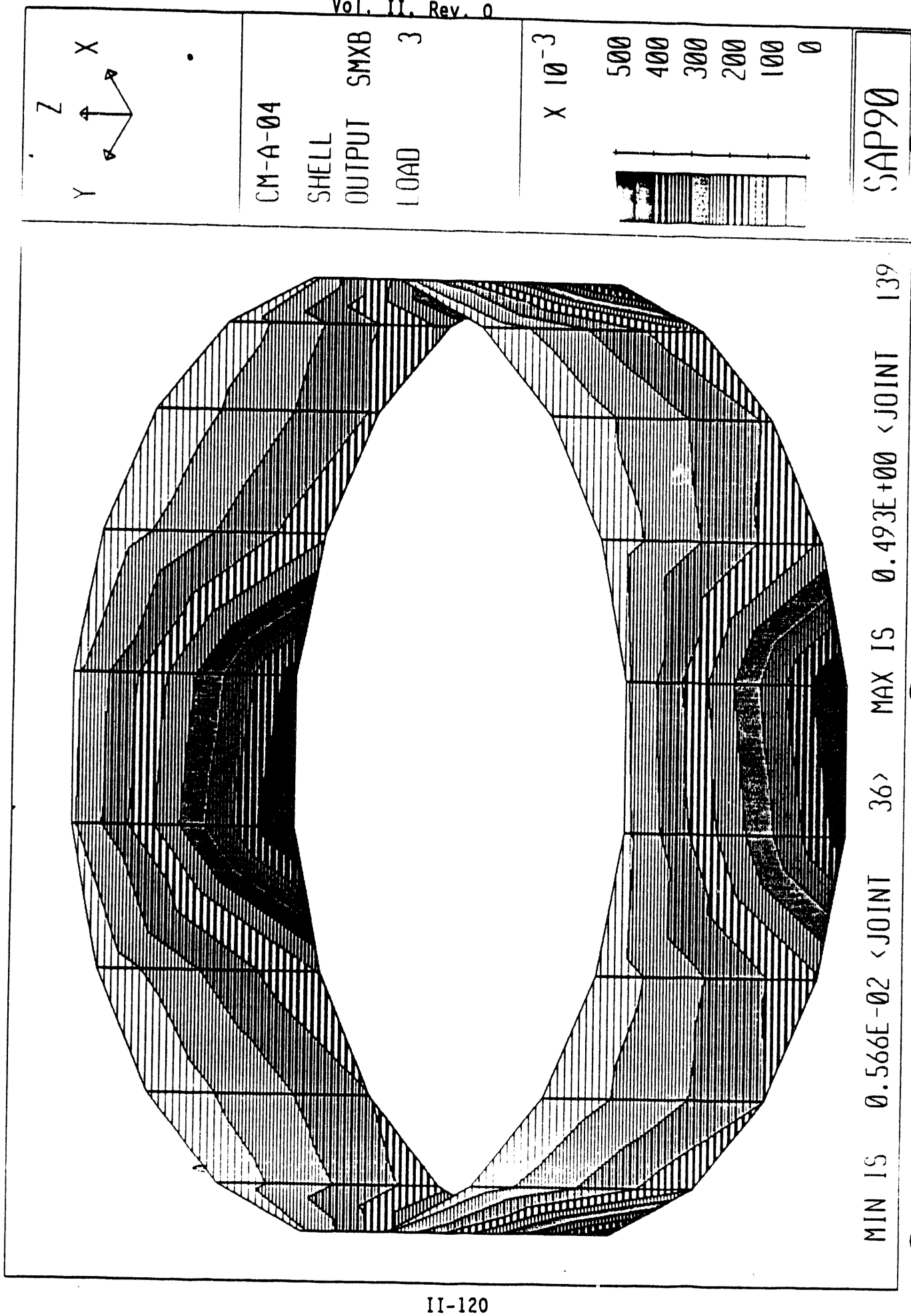
Z
X
Y
CM-A-04
SHELL
OUTPUT SMXB
LOAD 3
X 10^-3
500
400
300
200
100
0
SAP90
MIN IS 0.566E-02 <JOINT 36>
MAX IS 0.493E+00 <JOINT 139

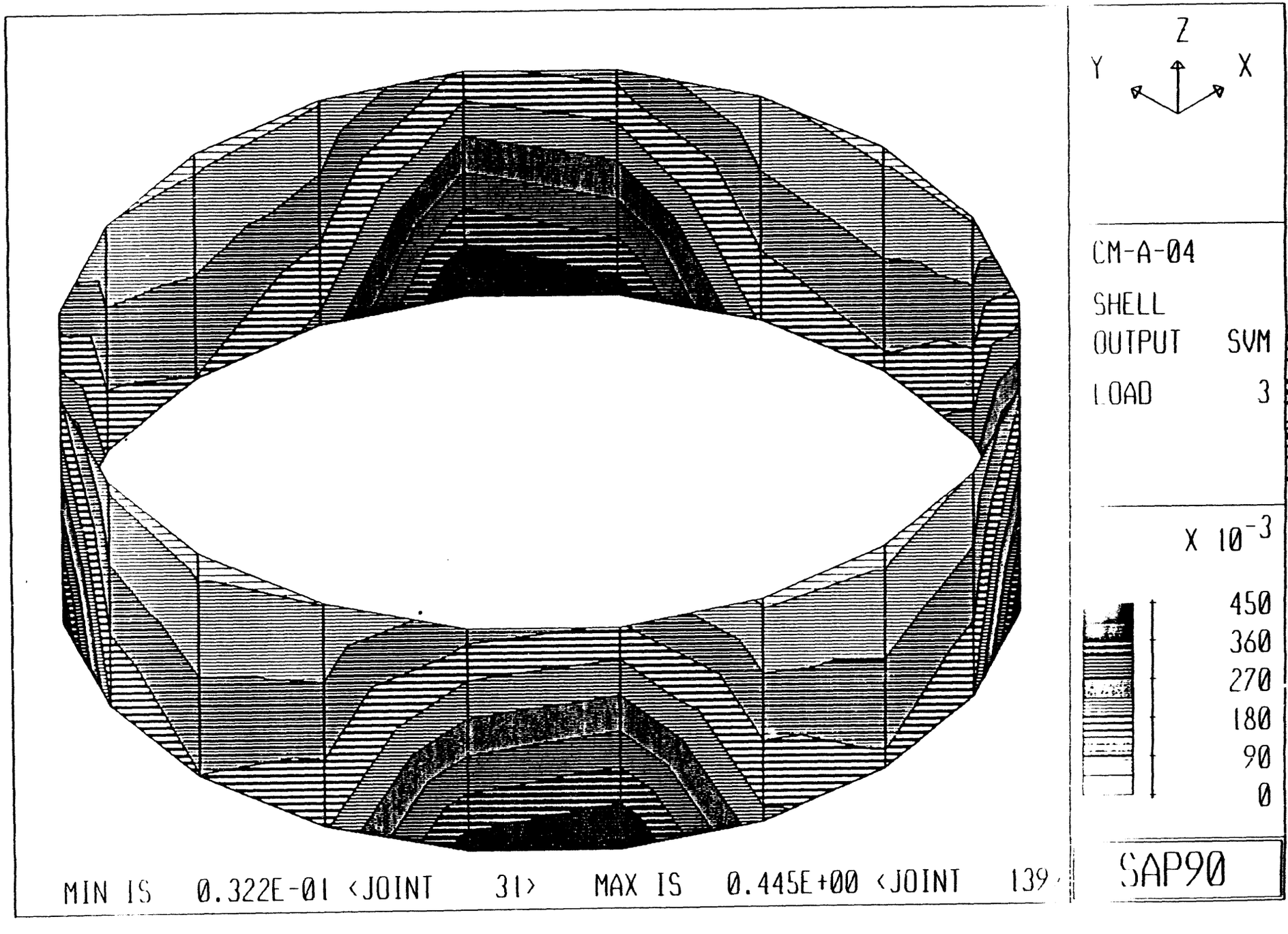
Z
Y
X
CM-A-04
SHELL
OUTPUT SVM
LOAD 3
X 10^-3
450
360
270
180
90
0
SAP90
MIN IS 0.322E-01 <JOINT 31> MAX IS 0.445E+00 <JOINT 139>

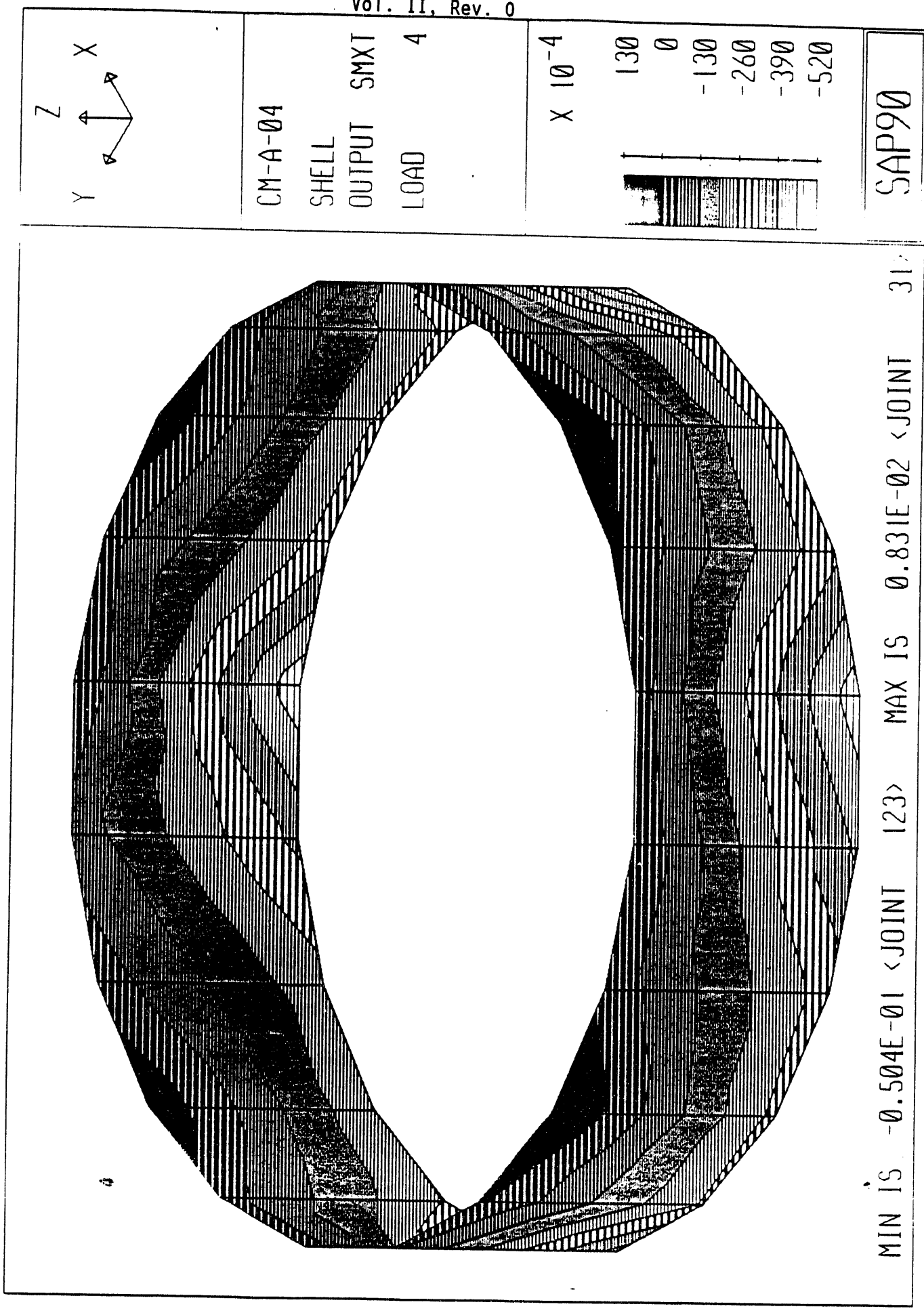
Z
X
Y
CM-A-04
SHELL
OUTPUT SMXT
LOAD 4
X 10^-4
130
0
-130
-260
-390
-520
SAP90
MIN IS -0.504E-01 <JOINT 123>
MAX IS 0.831E-02 <JOINT 31

5.4.41

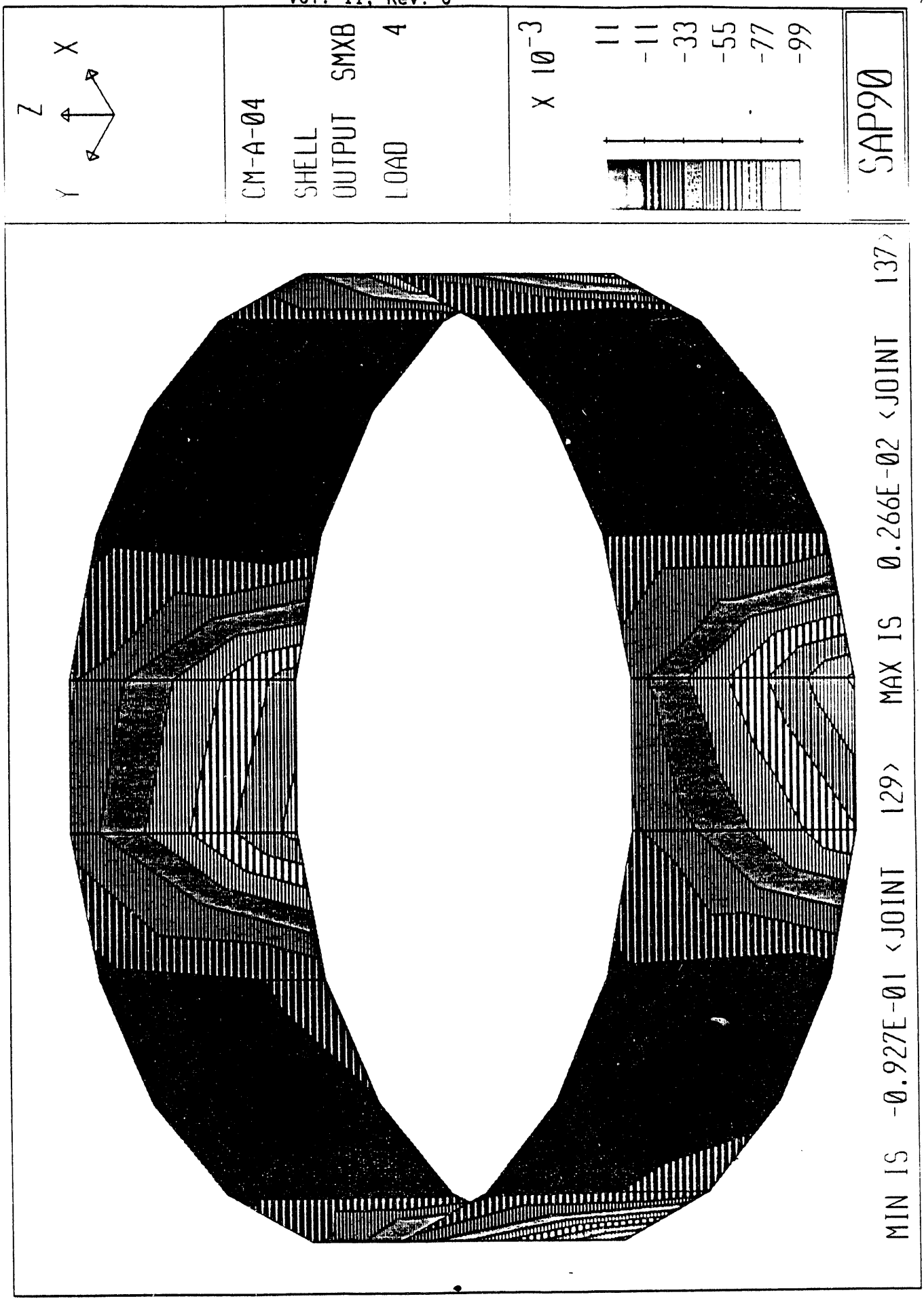
Z
X
Y
CM-A-04
SHELL
OUTPUT SMXB
LOAD 4
X 10^-3
11
-11
-33
-55
-77
-99
SAP90
MIN IS -0.927E-01 <JOINT 129>
MAX IS 0.266E-02 <JOINT 137>

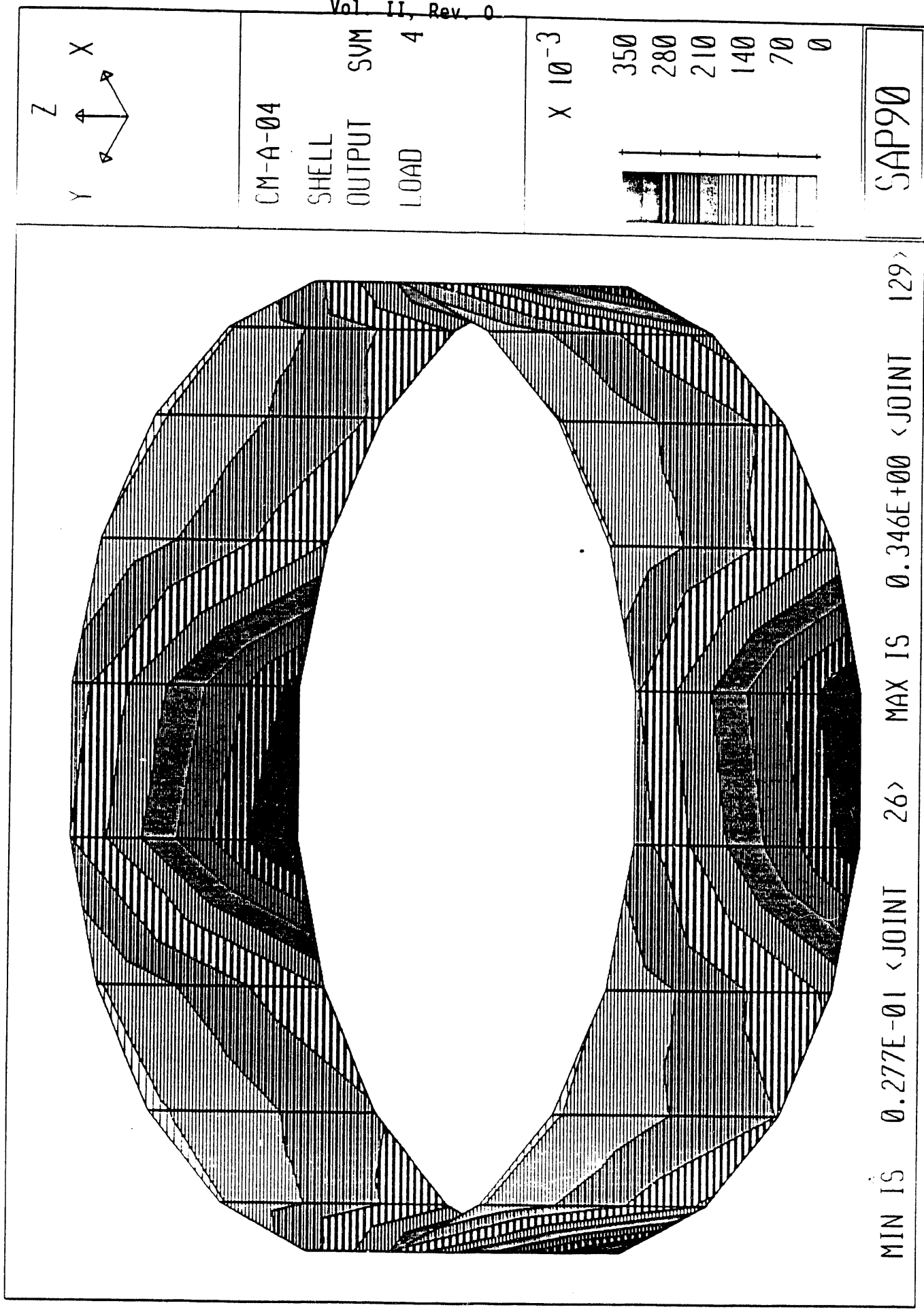
Z
X
Y
CM-A-04
SHELL
OUTPUT SVM
LOAD 4
X 10^-3
350
280
210
140
70
0
SAP90
MIN IS 0.277E-01 <JOINT 26>
MAX IS 0.346E+00 <JOINT 129>

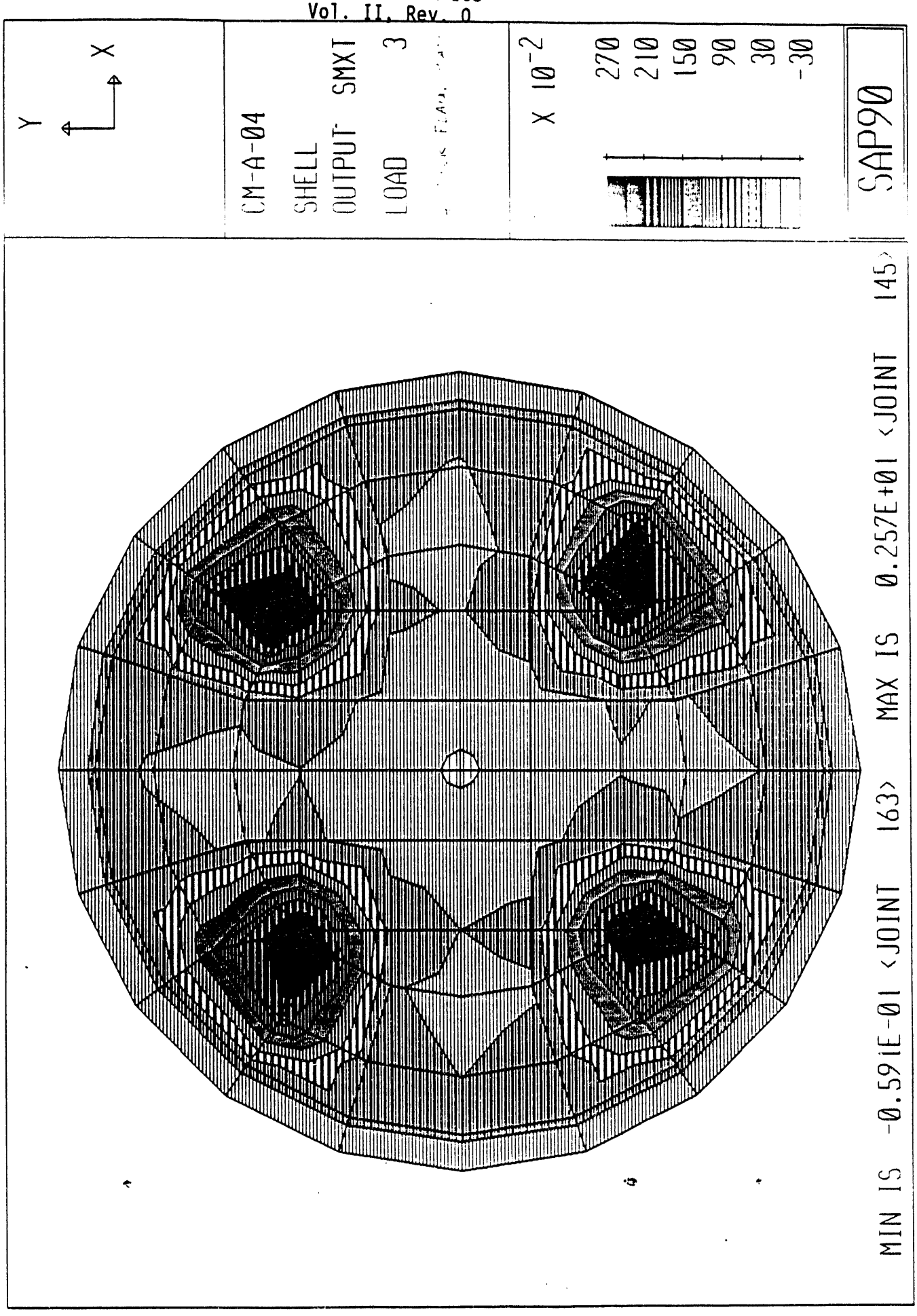
Y
X
CM-A-04
SHELL
OUTPUT SMXT
LOAD 3
X 10^-2
270
210
150
90
30
-30
SAP90
MIN IS -0.591E-01 <JOINT 163>
MAX IS 0.257E+01 <JOINT 145>

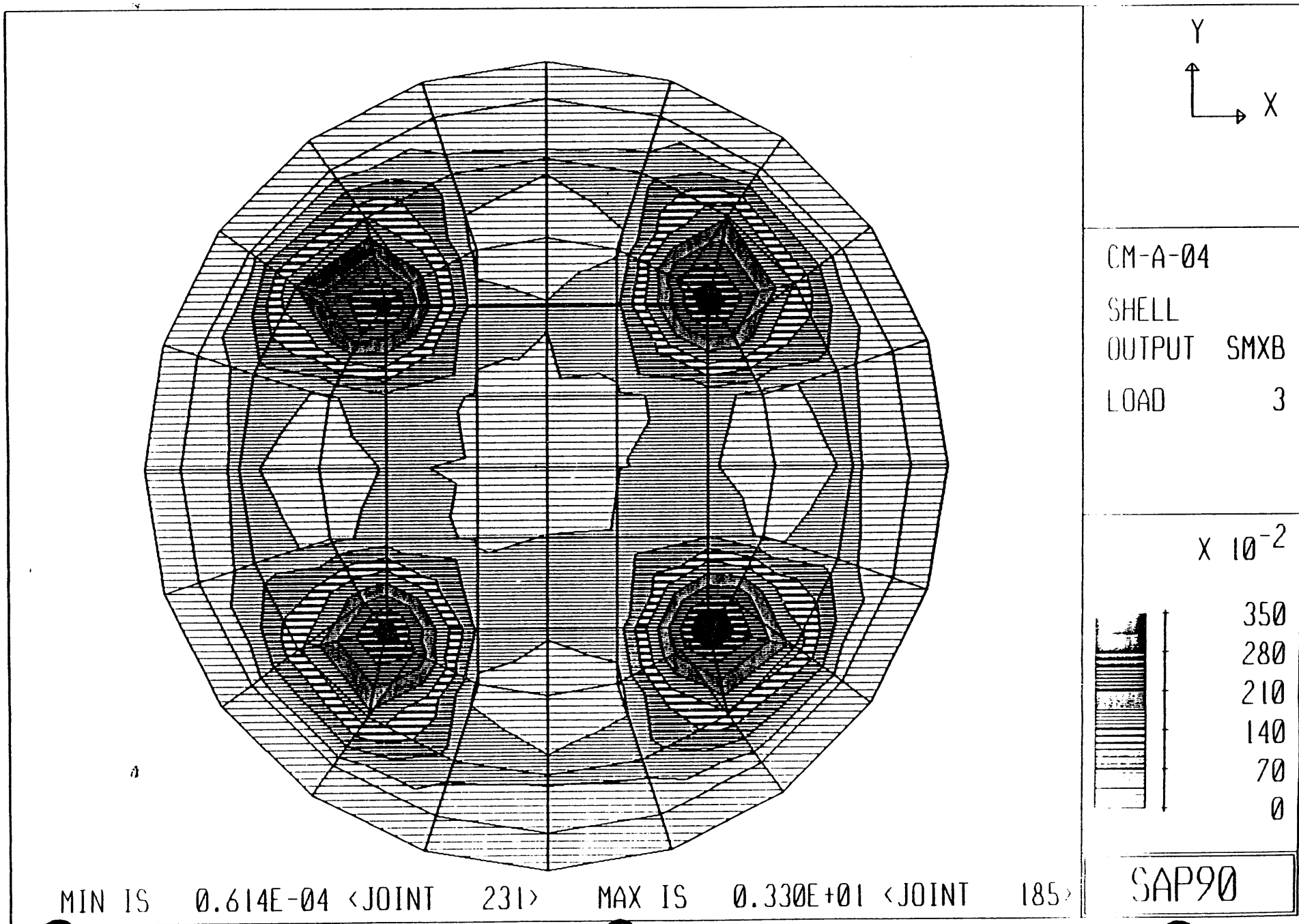
Y
X
CM-A-04
SHELL
OUTPUT SMXB
LOAD 3
X 10^-2
350
280
210
140
70
0
SAP90
MIN IS 0.614E-04 <JOINT 231> MAX IS 0.330E+01 <JOINT 185>

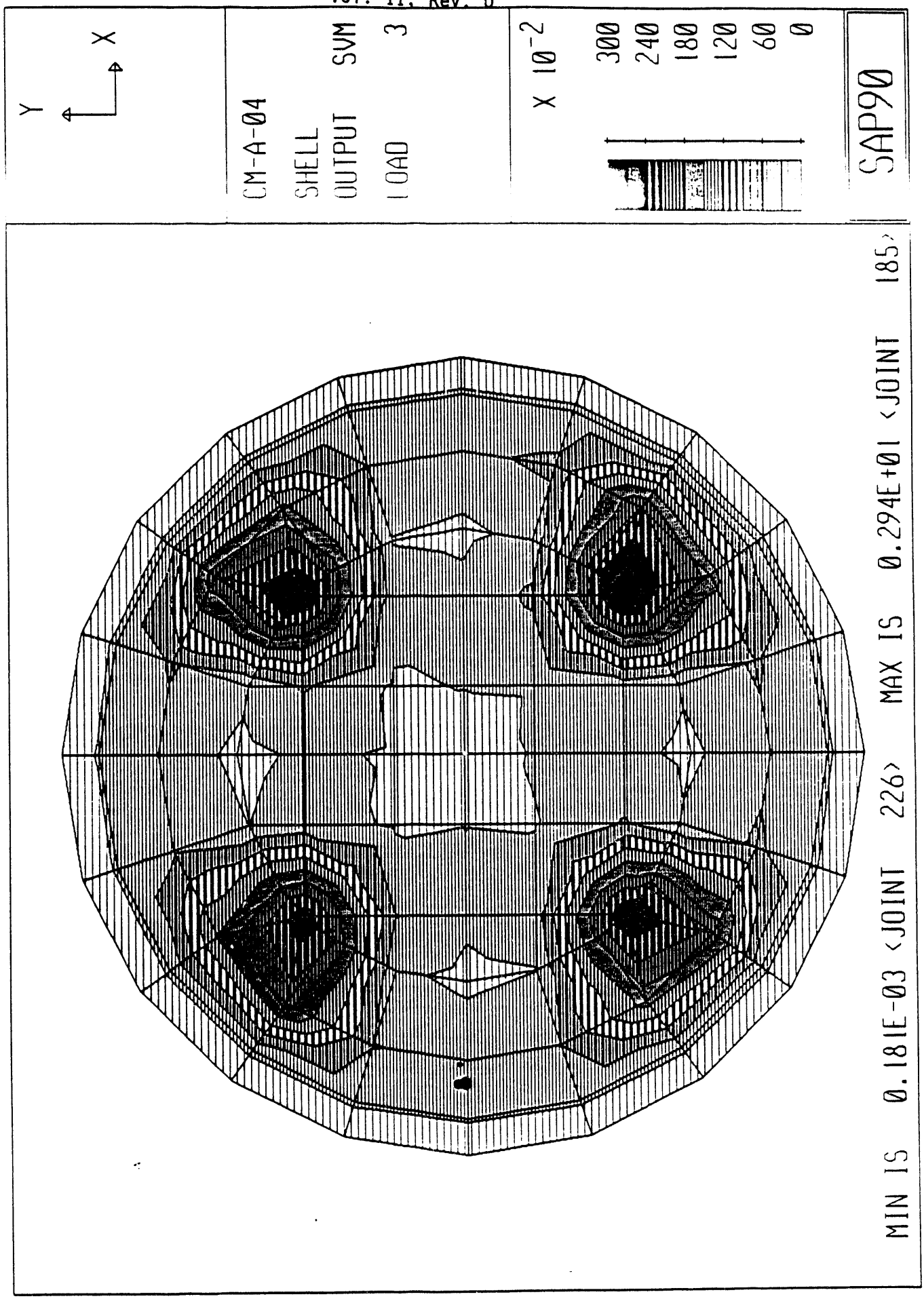
Y
X
CM-A-04
SHELL
OUTPUT SVM
LOAD 3
X 10^-2
300
240
180
120
60
0
SAP90
MIN IS 0.181E-03 <JOINT 226>
MAX IS 0.294E+01 <JOINT 185>

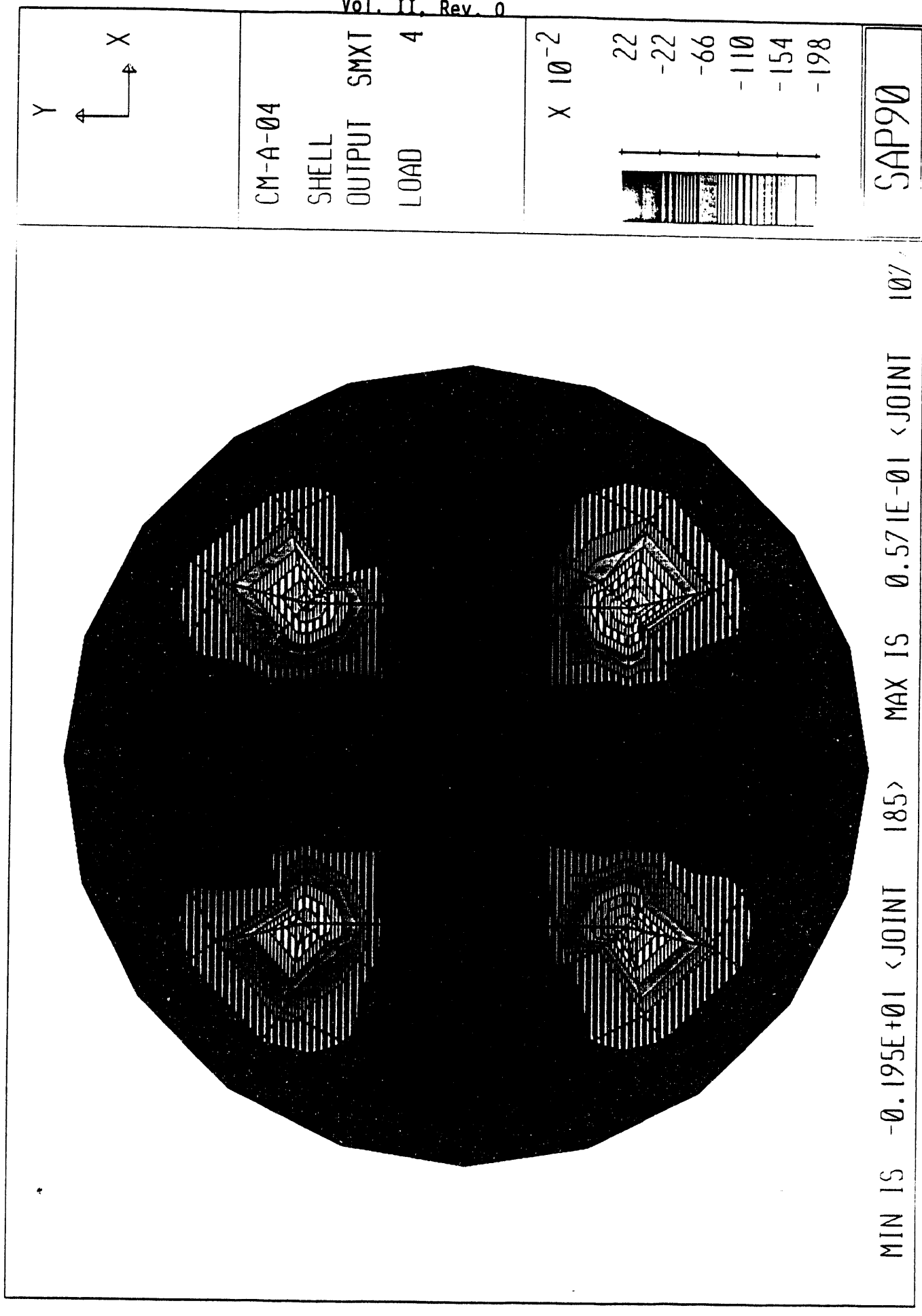
Y
X
CM-A-04
SHELL
OUTPUT SMXT
LOAD 4
X 10^-2
22
-22
-66
-110
-154
-198
SAP90
MIN IS -0.195E+01 <JOINT 185>
MAX IS 0.571E-01 <JOINT 107>

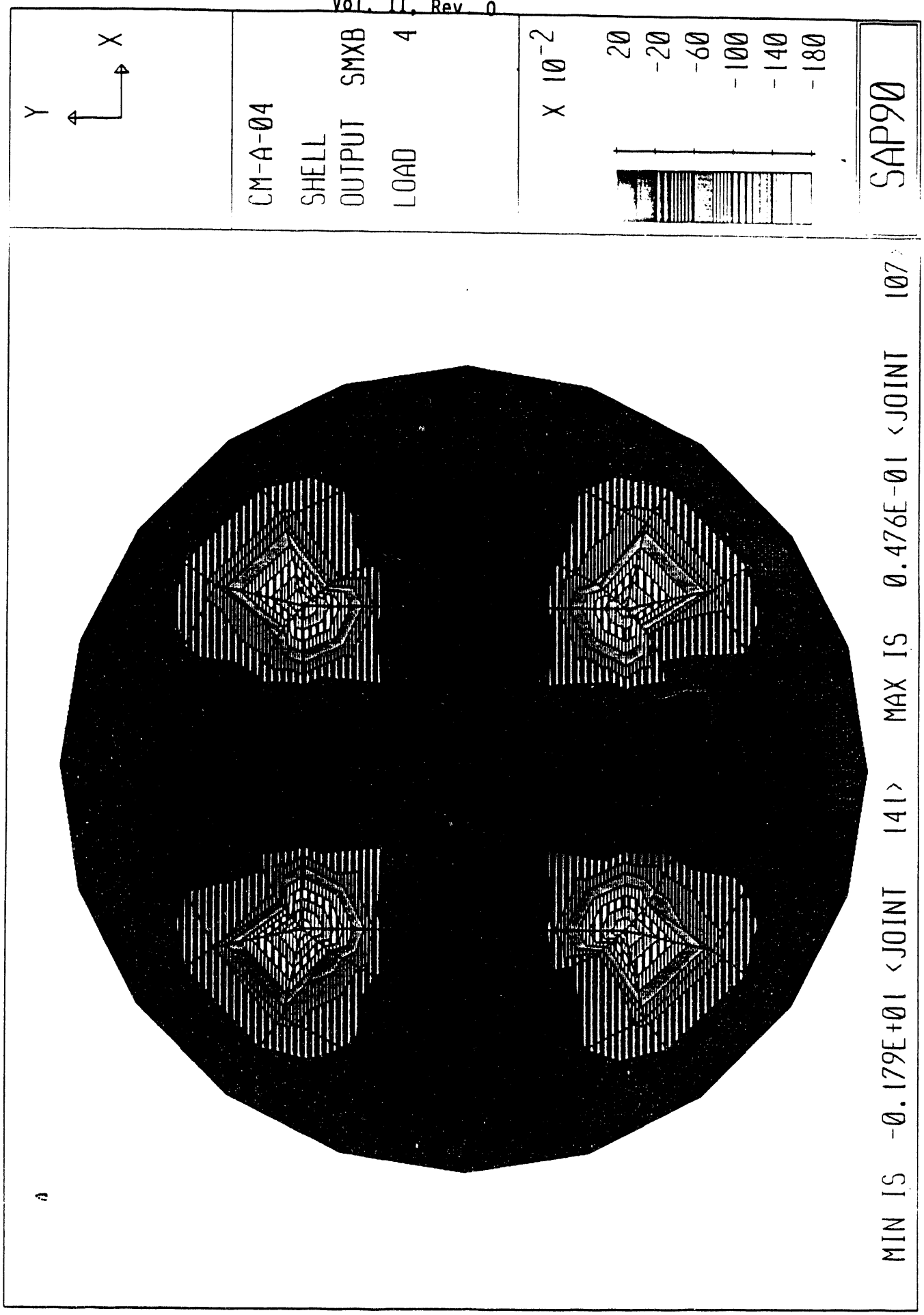
Y
X
CM-A-04
SHELL
OUTPUT SMXB
LOAD 4
X 10^-2
20
-20
-60
-100
-140
-180
SAP90
MIN IS -0.179E+01 <JOINT 141>
MAX IS 0.476E-01 <JOINT 107

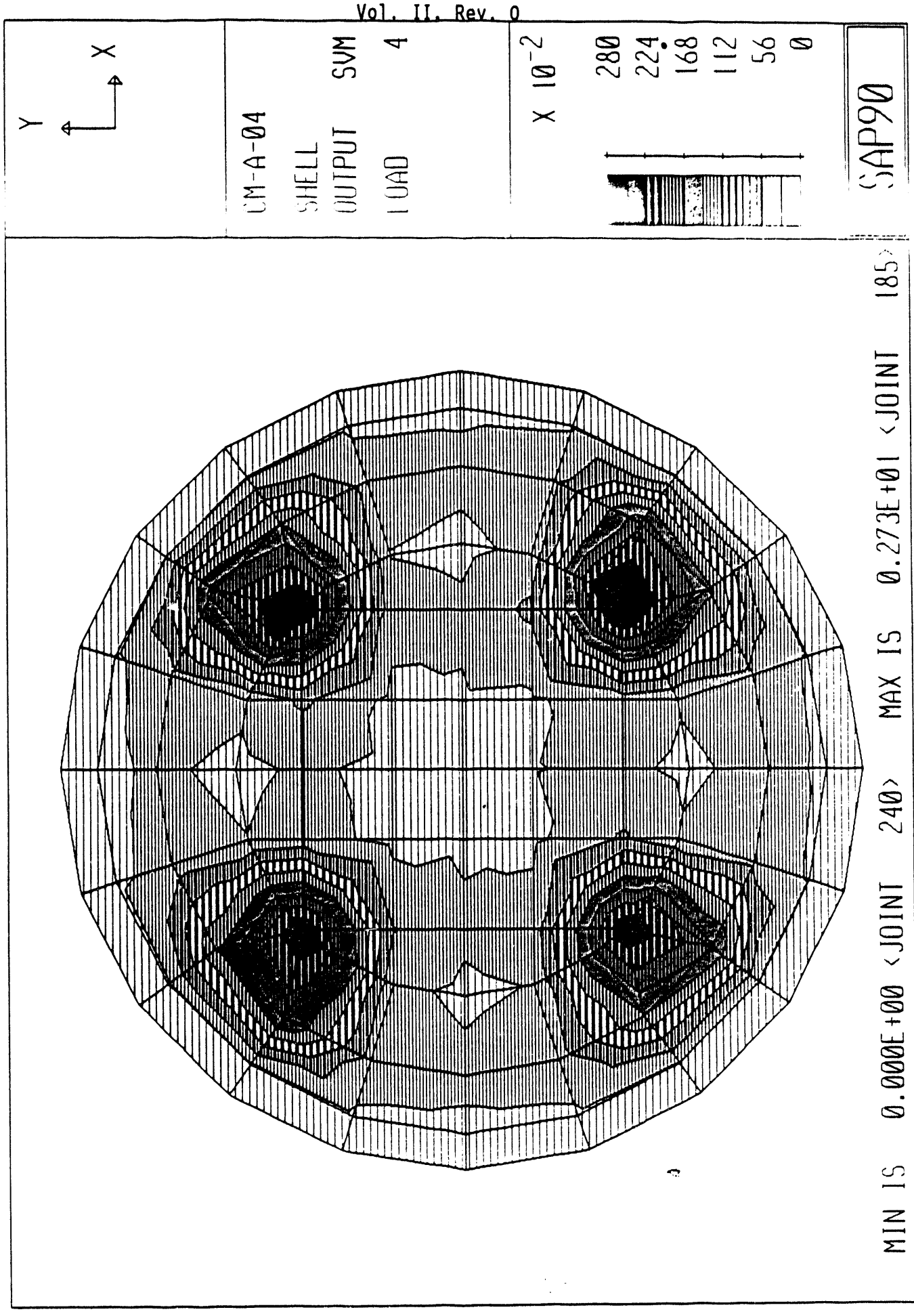
Y
X
CM-A-04
SHELL
OUTPUT SVM
LOAD 4
X 10^-2
280
224
168
112
56
0
SAP90
MIN IS 0.000E+00 <JOINT 240>
MAX IS 0.273E+01 <JOINT 185>

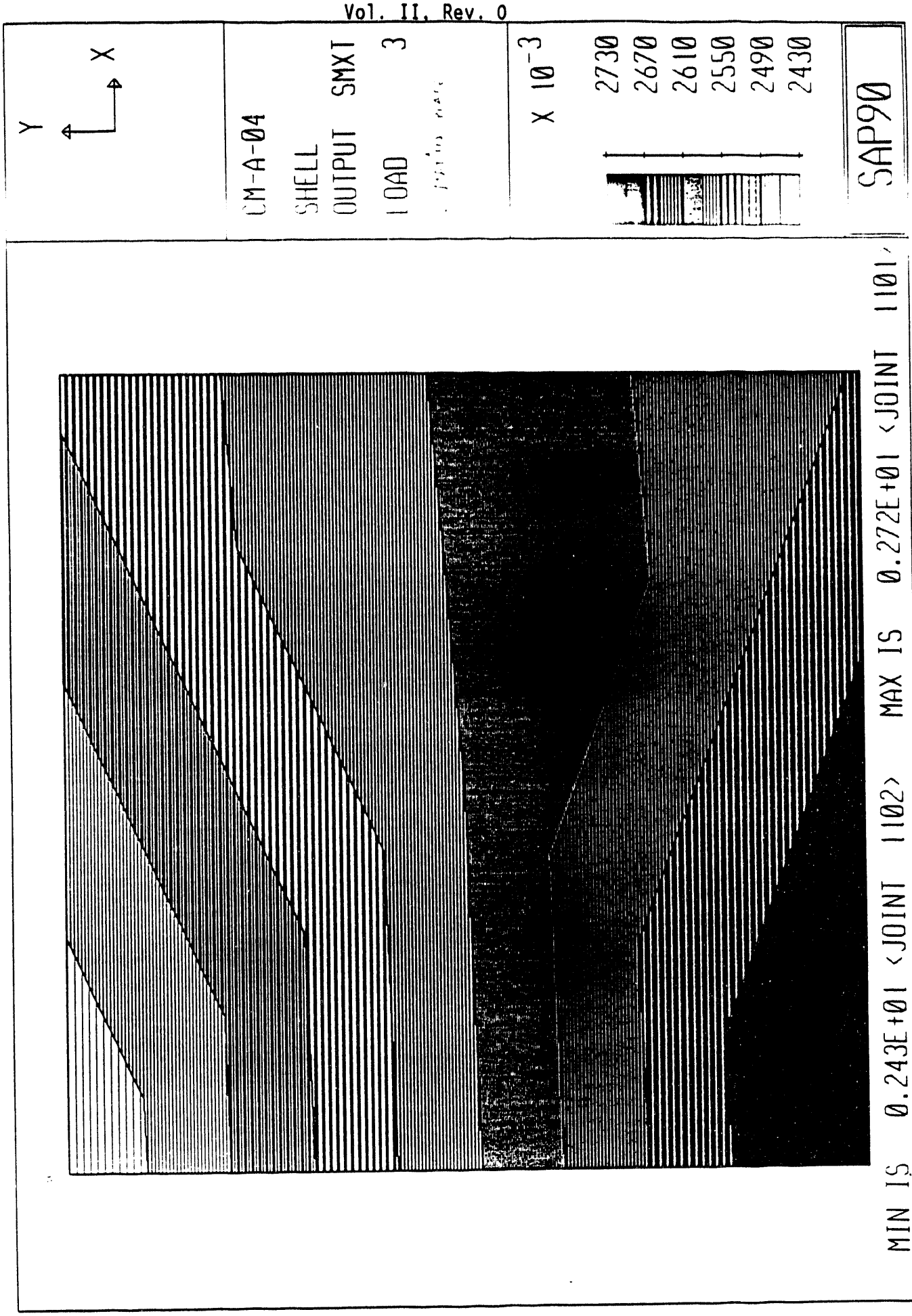
Y
X
CM-A-04
SHELL
OUTPUT SMXT
LOAD 3
X 10^-3
2730
2670
2610
2550
2490
2430
SAP90
MIN IS 0.243E+01 <JOINT 1102> MAX IS 0.272E+01 <JOINT 1101>

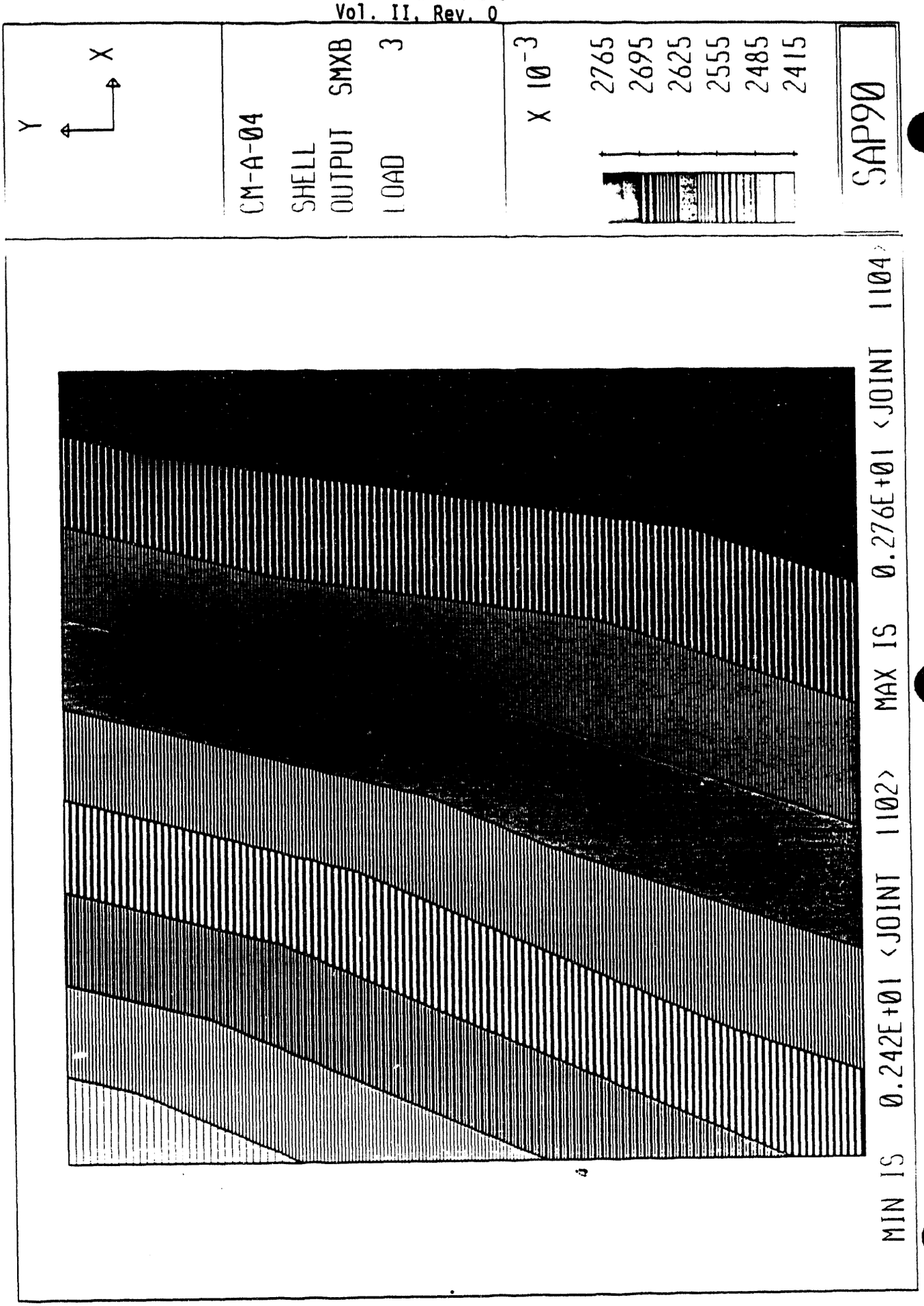
Y
X
CM-A-04
SHELL
OUTPUT SMXB
LOAD 3
X 10^-3
2765
2695
2625
2555
2485
2415
SAP90
MIN IS 0.242E+01 <JOINT 1102>
MAX IS 0.276E+01 <JOINT 1104>

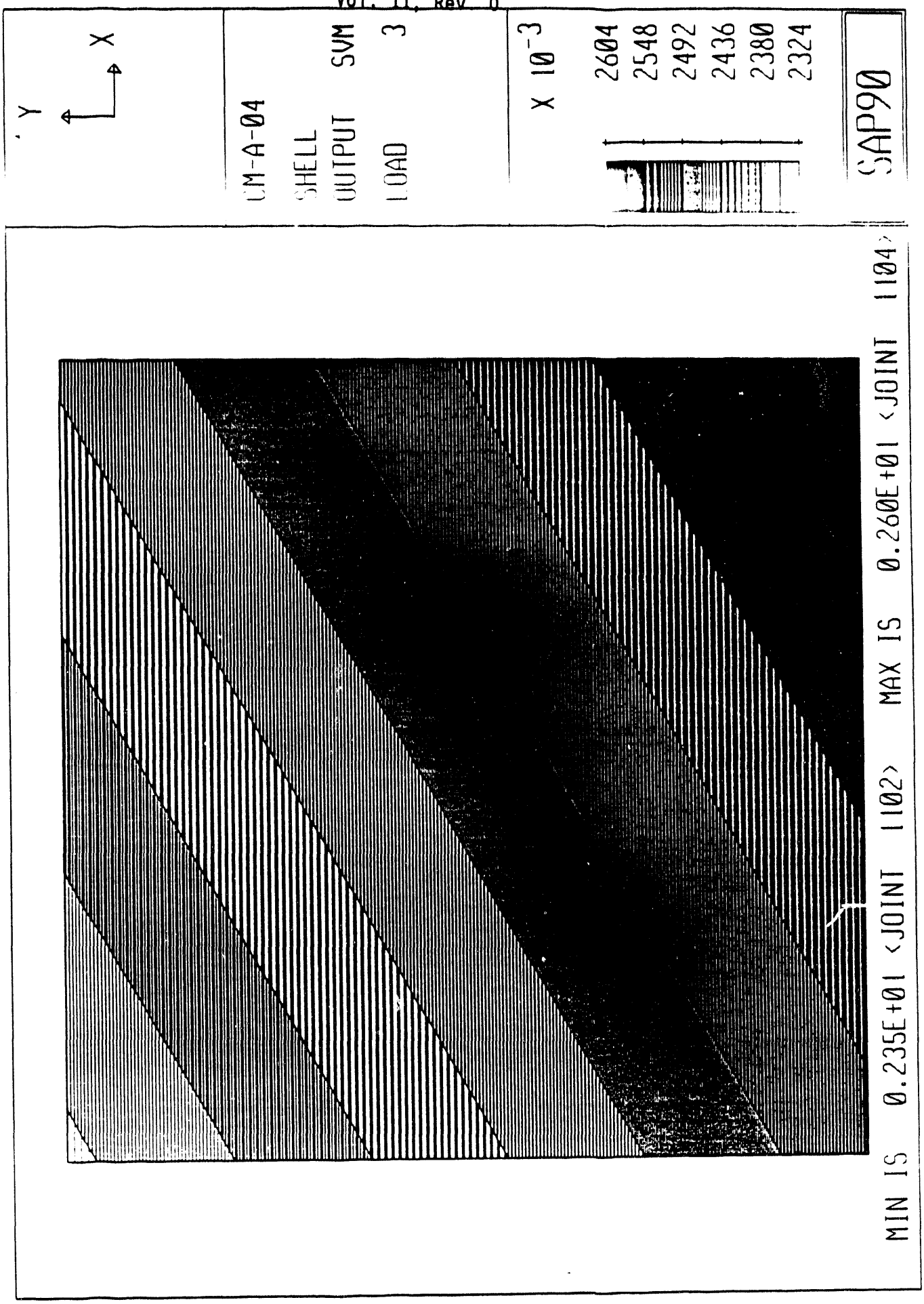
Y
X
CM-A-04
SHELL
OUTPUT SVM
LOAD 3
X 10^-3
2604
2548
2492
2436
2380
2324
SAP90
MIN IS 0.235E+01 <JOINT 1102>
MAX IS 0.260E+01 <JOINT 1104>

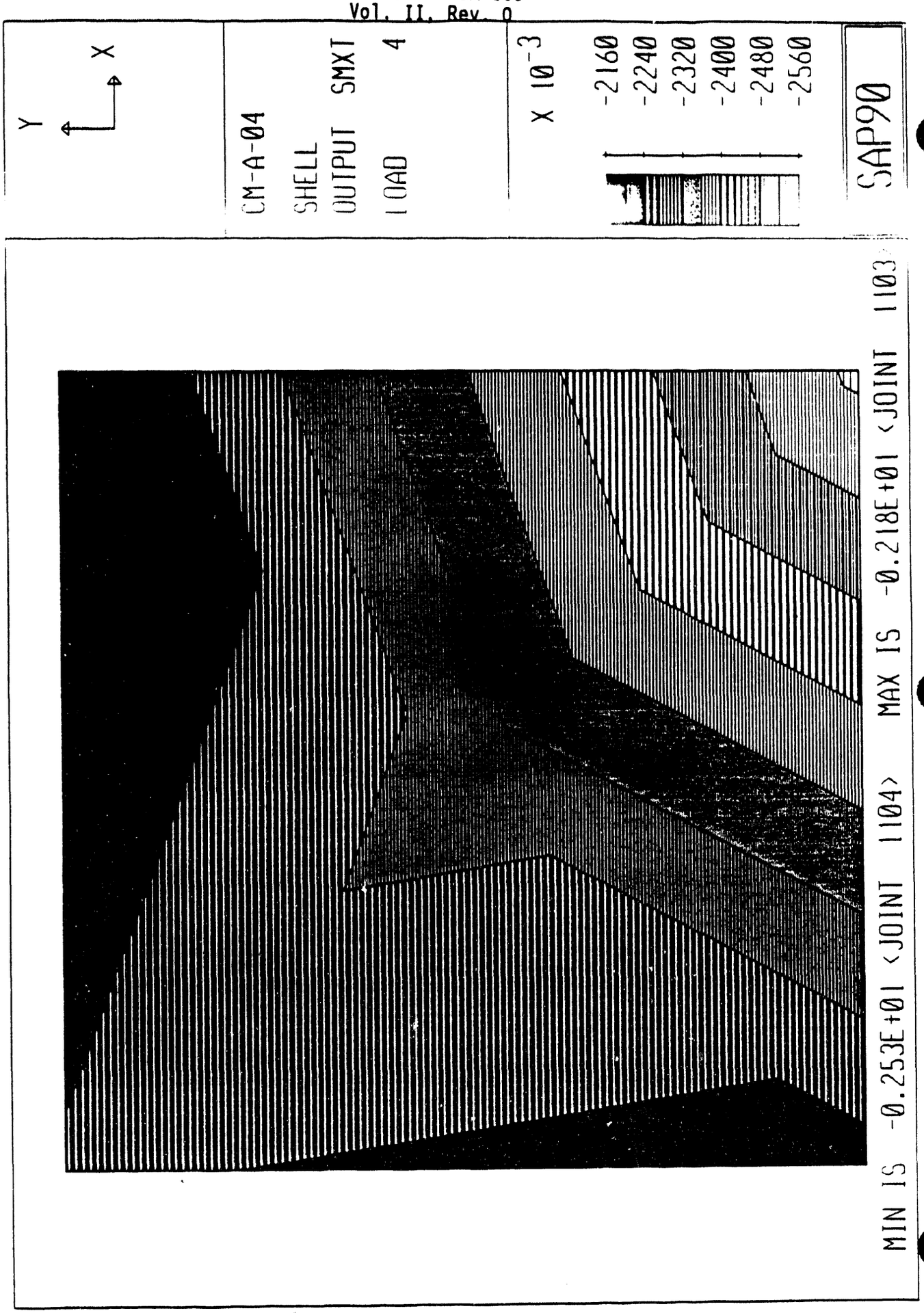
Y
X
CM-A-04
SHELL
OUTPUT SMXT
LOAD 4
X 10^-3
-2160
-2240
-2320
-2400
-2480
-2560
SAP90
MIN IS -0.253E+01 <JOINT 1104>
MAX IS -0.218E+01 <JOINT 1103

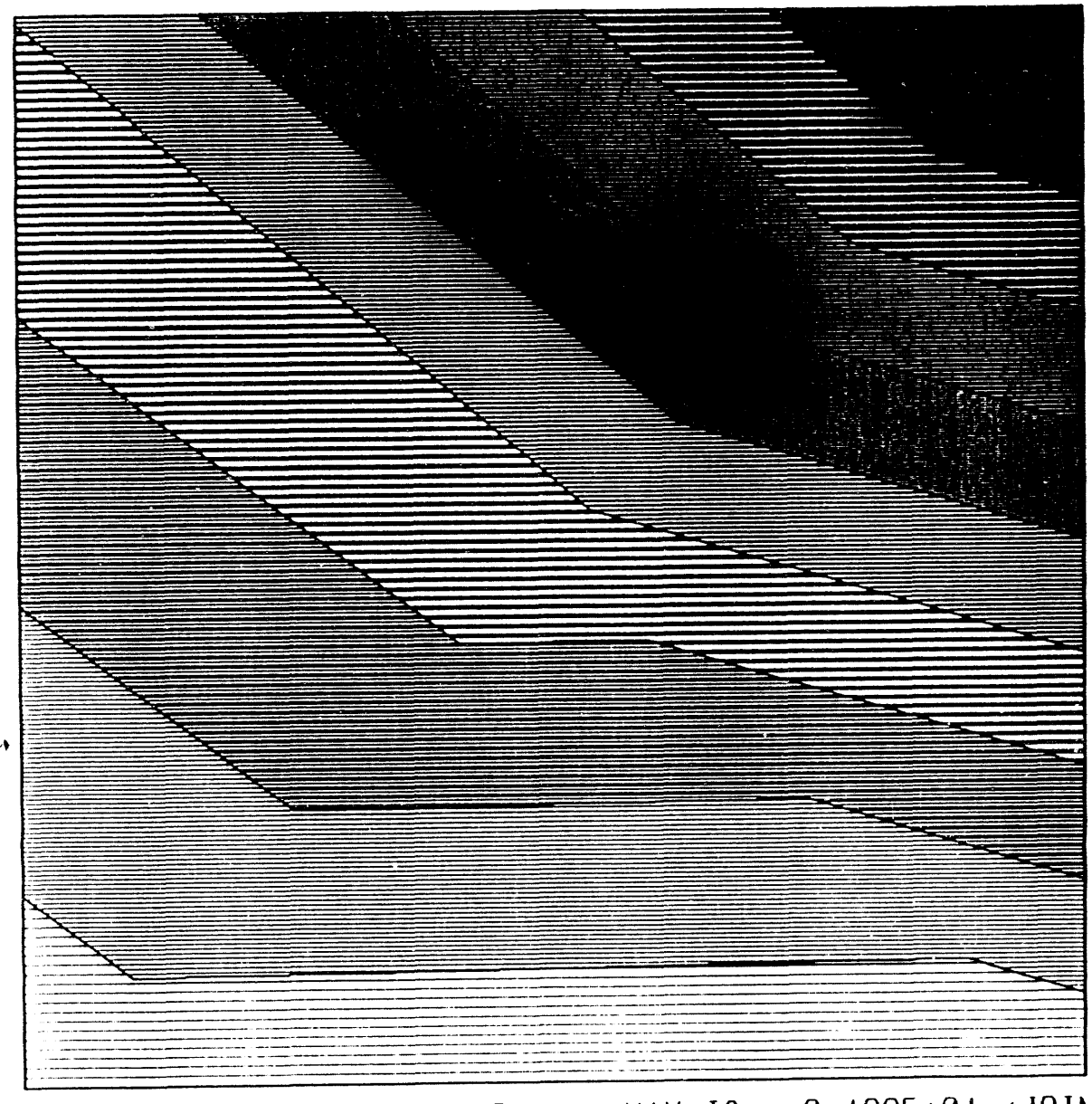

Y
X

CM-A-04

SHELL
OUTPUT SMXB
LOAD 4

X $10^{-3}$

-1980
-2070
-2160
-2250
-2340
-2430

SAP90

MIN IS -0.242E+01 <JOINT 1104> MAX IS -0.199E+01 <JOINT 1103>

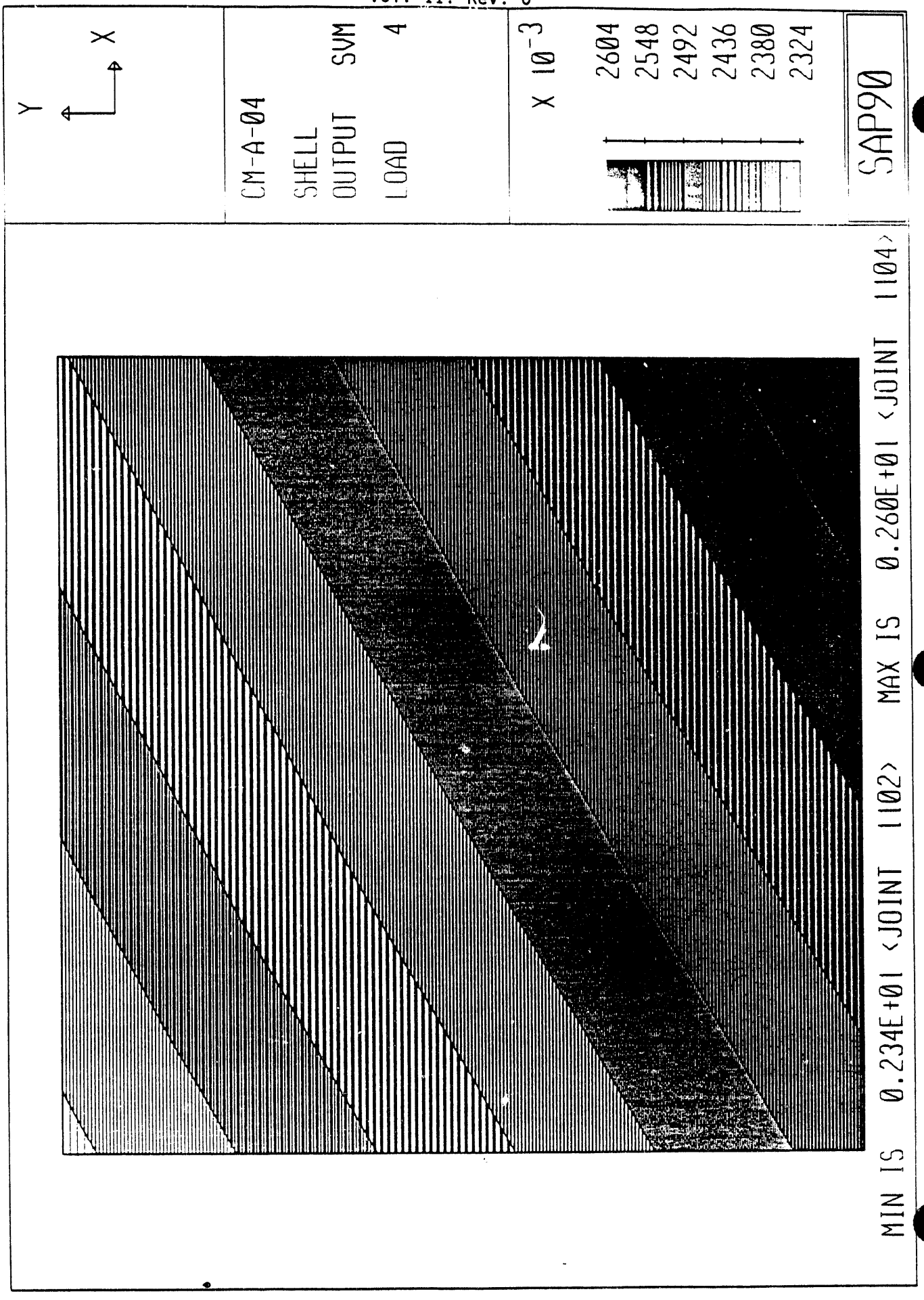
Y
X
CM-A-04
SHELL
OUTPUT SVM
LOAD 4
X 10^-3
2604
2548
2492
2436
2380
2324
SAP90
MIN IS 0.234E+01 <JOINT 1102>
MAX IS 0.260E+01 <JOINT 1104>

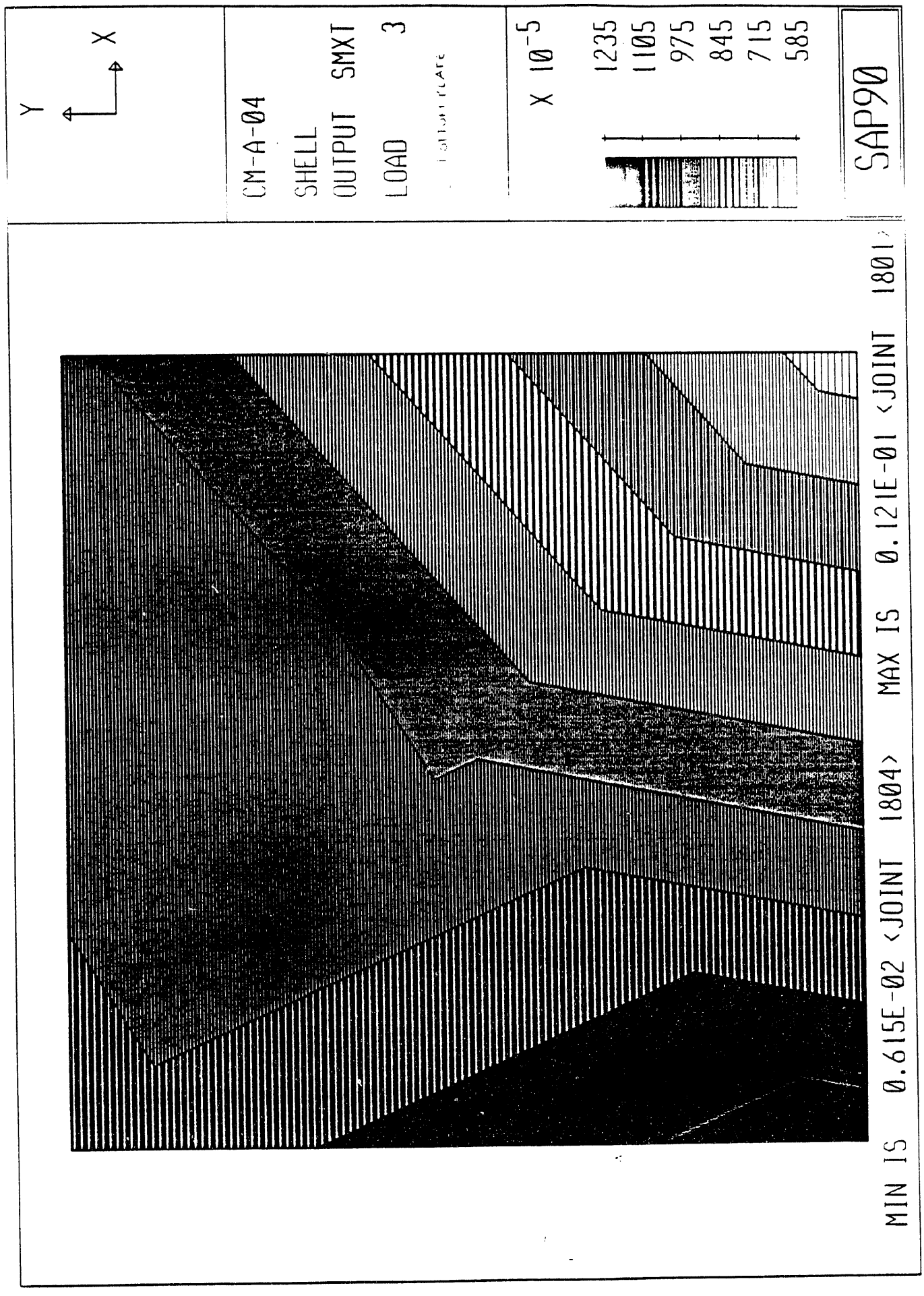
Y
X
CM-A-04
SHELL
OUTPUT SMXT
LOAD 3
X 10^-5
1235
1105
975
845
715
585
SAP90
MIN IS 0.615E-02 <JOINT 1804>
MAX IS 0.121E-01 <JOINT 1801>

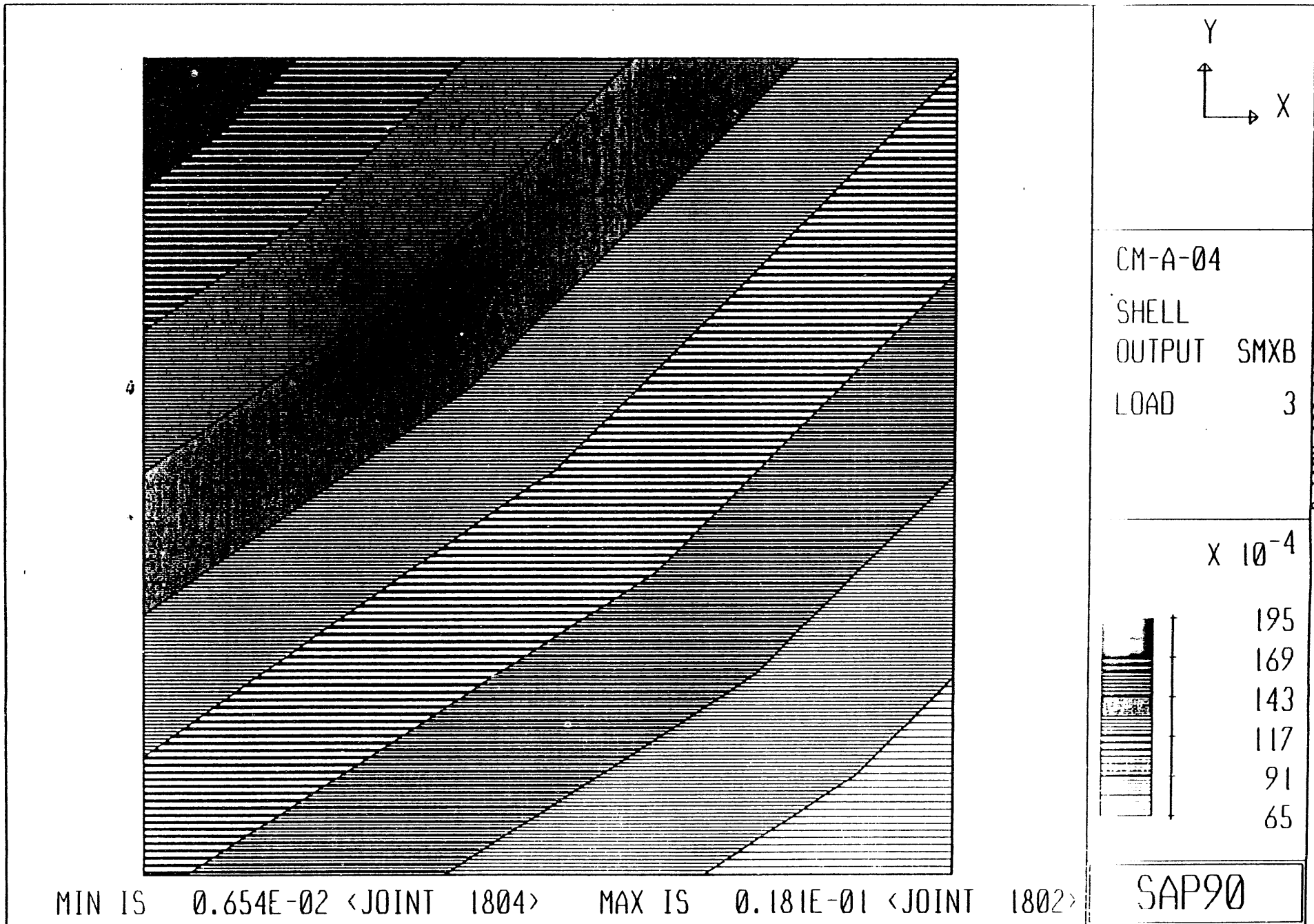
Y
X
CM-A-04
SHELL
OUTPUT SMXB
LOAD 3
X 10^-4
195
169
143
117
91
65
SAP90
MIN IS 0.654E-02 <JOINT 1804> MAX IS 0.181E-01 <JOINT 1802>

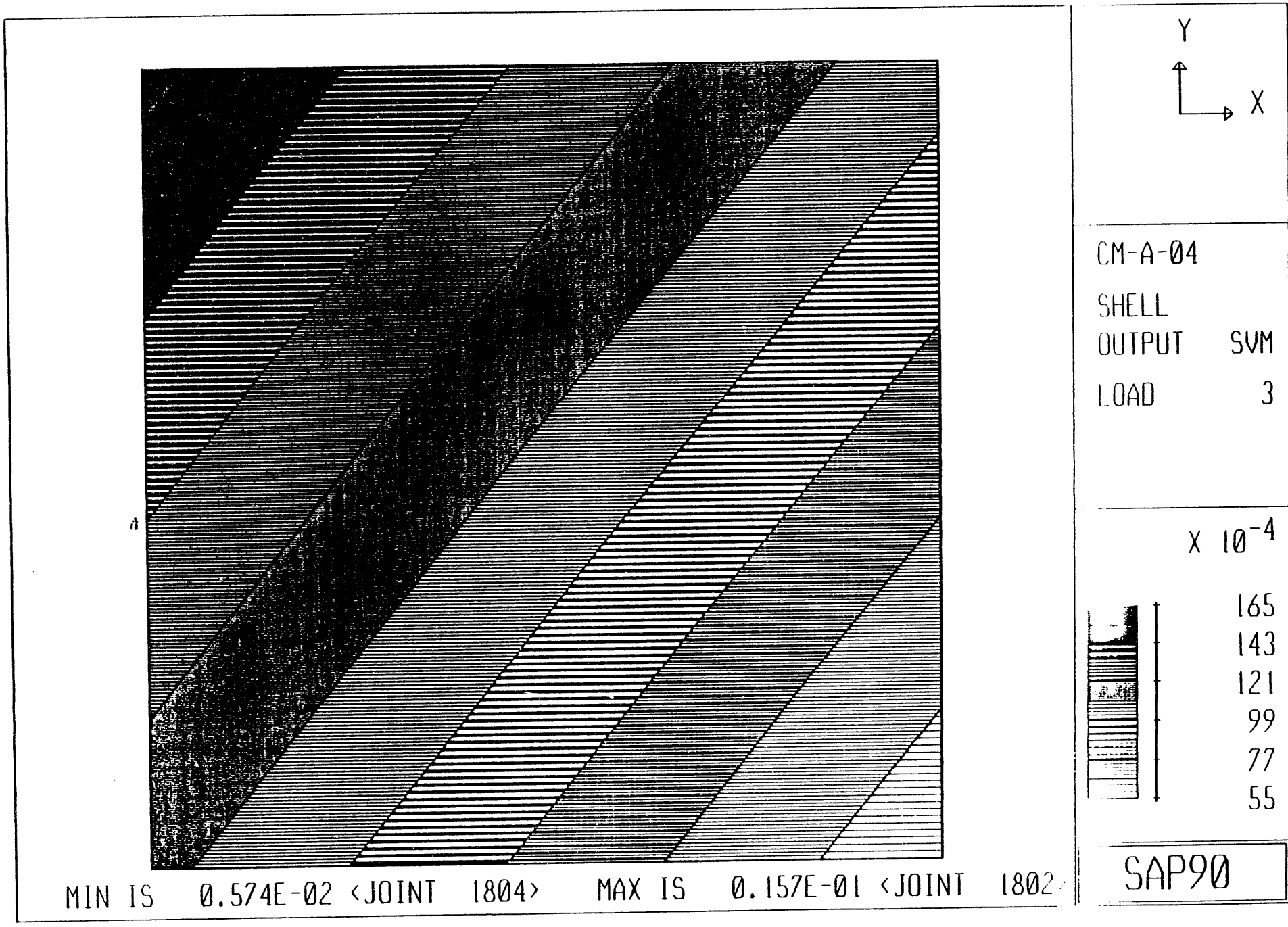
Y
X
CM-A-04
SHELL
OUTPUT SVM
LOAD 3
X 10^-4
165
143
121
99
77
55
SAP90
MIN IS 0.574E-02 <JOINT 1804> MAX IS 0.157E-01 <JOINT 1802>

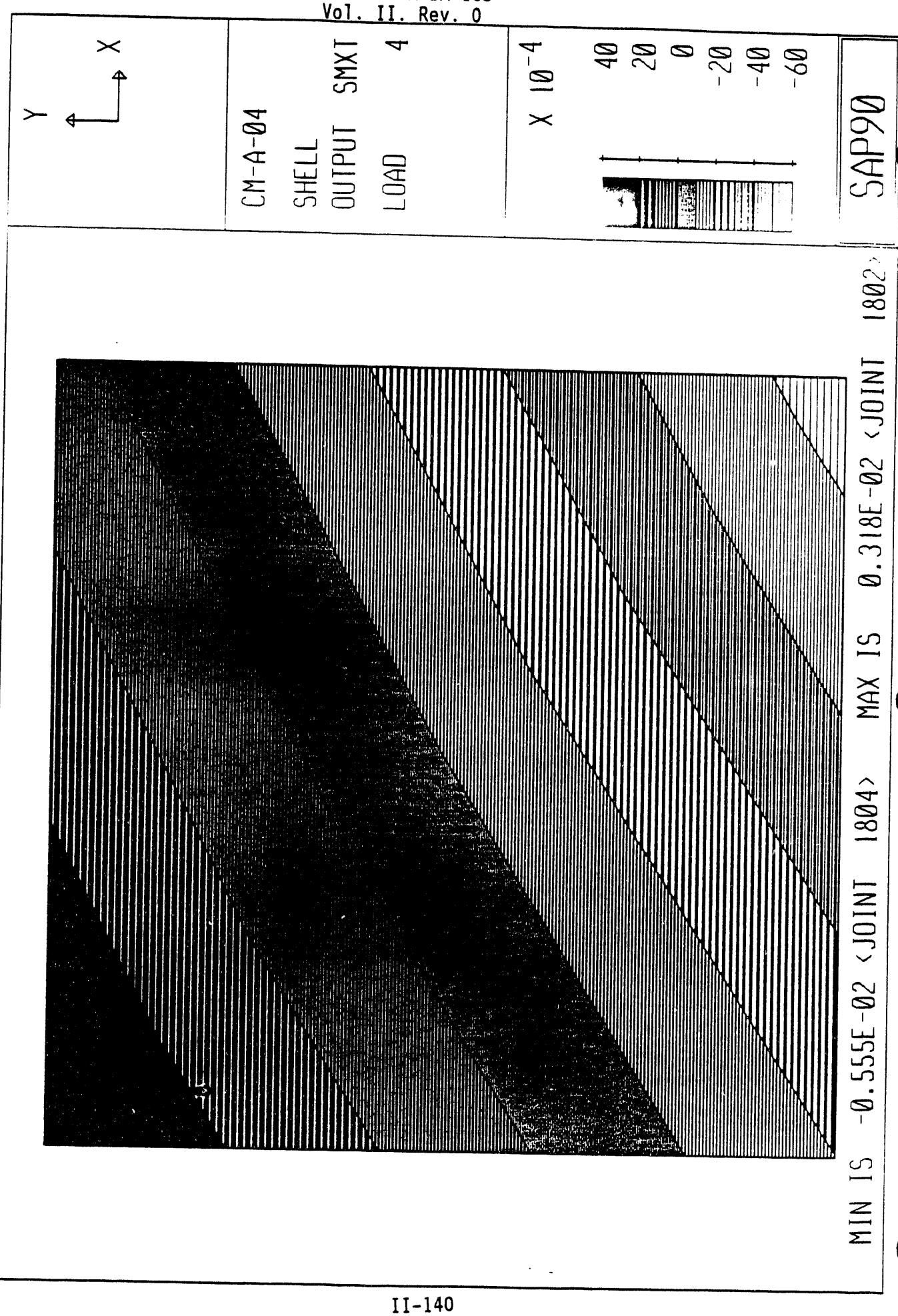
Y
X
CM-A-04
SHELL
OUTPUT SMXT
LOAD 4
X 10^-4
40
20
0
-20
-40
-60
SAP90
MIN IS -0.555E-02 <JOINT 1804>
MAX IS 0.318E-02 <JOINT 1802>

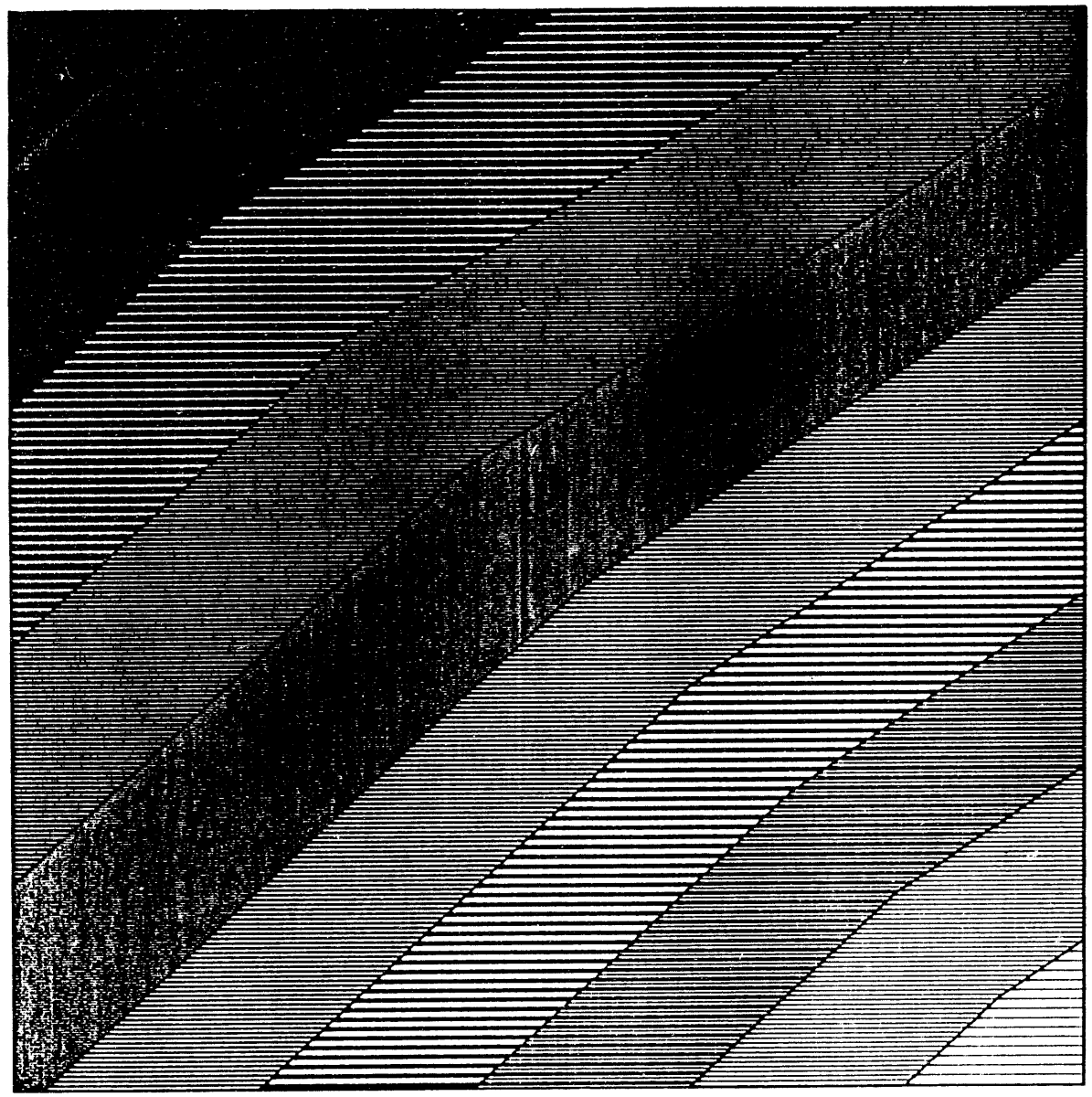

Y
X

CM-A-04

SHELL
OUTPUT SMXB

LOAD 4

X $10^{-5}$

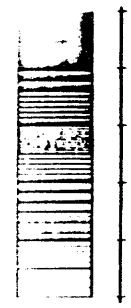

0
-180
-360
-540
-720
-900

SAP90

MIN IS -0.886E-02 <JOINT 1804> MAX IS -0.298E-03 <JOINT 1802>

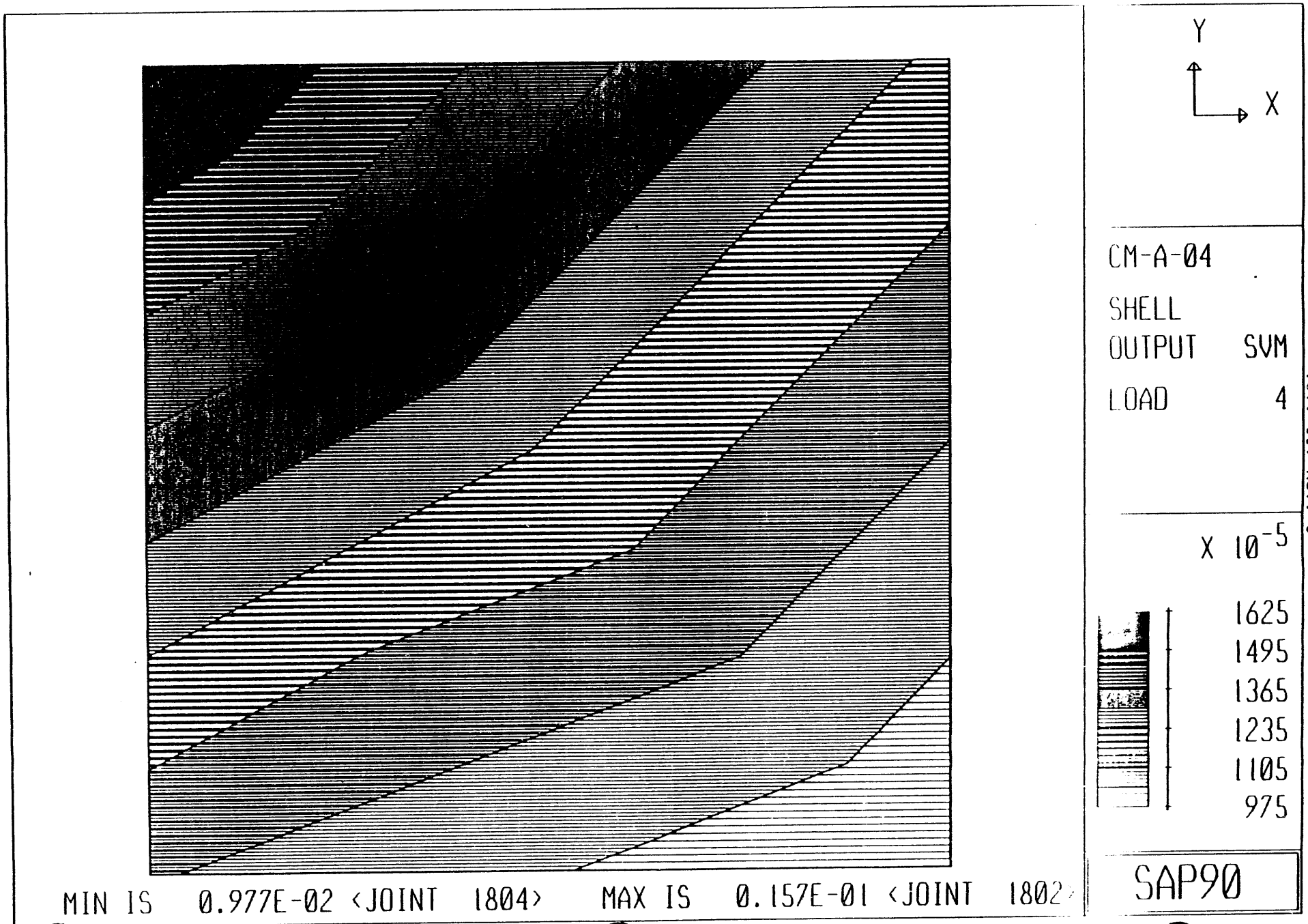
Y
X
CM-A-04
SHELL
OUTPUT SVM
LOAD 4
X 10^-5
1625
1495
1365
1235
1105
975
SAP90
MIN IS 0.977E-02 <JOINT 1804> MAX IS 0.157E-01 <JOINT 1802>

# 6. CHECK ELEMENT STRESSES

## TABLE OF CONTENTS


| SECTION | CONTENTS | PAGE NO. |
|---|---|---|
| 6.1 | General Discussion | 6.1.1 |
| 6.2 | Check Shell Element Stresses | 6.2.1 – 6.2.7 |
| 6.3 | Check Beam Element Stresses | 6.3.1 – 6.3.2 |

## 6.1 General Discussion

SAP90 Model A (SAP90 Run ID CM-A-04) results are evaluated because the element stresses are higher when the flange plate is fixed at the center of plate than when the flange plate is free to displace (Model B).

Using the given material from the drawings (Attachment A) and the allowable stresses (Attachment C) were computed. The maximum element stresses were compared to the allowable stresses and the stress ratios were computed for the shell elements. For the beam elements, the stress ratios from SAPSTL were obtained and analyzed.

The checking of the bolts and welding connections are given in Section 7.

## 6.2 Check Shell Element Stresses

Hand calculations of the following are given in this section:

- **3" thick Shielding Plate**
- **2" thick Manifold Tube**
- **3/4" thick Flange Plate**
- **1/2" thick Mating & Bottom Plates**

**URS Consultants**
**URS/John A. Blume & Associates, Engineers**

Job no. 66458-01 Job WHC/MPF ANALYSIS
Client
Subject SHIELDING PLATE (PART NO. 42-2)

Sheet No. 6.2.2
Calc. No.
Rev. No.
By PKL Date 5/31/94
Chk'd [illegible] Date 2/[illegible]/[illegible]

STRESS CHECK for [illegible] THICK SHIELDING PLATE

MAT'L : CARBON STEEL

$f_y = 36$ Ksi $\qquad f_u = 58$ Ksi

ALLOWABLE STRESSES:

BENDING $= 1.6\,(0.6\,f_y)$
$= 34.56$ Ksi $< 0.7 f_u = 40.6$ Ksi OK

where 1.6 = stress Limit Coeff. for extreme case (See ANSI/AISC N690-1984, TABLE Q1.5.7.1)

SHEAR $= 1.4\,(0.4\,f_y)$
$= 20.16$ Ksi

SAP90 RESULTS

FROM SAPLOT of ELEMENT STRESSES, MAX. STRESSES ARE :

| | LOAD* CASE | MAX STRESSES (Ksi) | ALLOWABLE STRESSES (Ksi) | STRESS RATIO |
|---|---|---|---|---|
| $S_{Mx}$ (Top) | 3 | 0.0454 | 34.56 | 0.00131 |
| $S_{Mx}$ (Bot) | 3 | 0.0393 | 34.56 | 0.00114 |
| $S_{VM}$* (SHEAR) | 3 | 0.0490 | 20.16 | 0.00243 |
| $S_{Mx}$ (Top) | 4 | 0.0115 | 34.56 | 0.000333 |
| $S_{Mx}$ (Bot) | 4 | -0.0408 | 34.56 | 0.00118 |
| $S_{VM}$* (SHEAR) | 4 | 0.0549 | 20.16 | 0.00272 ← |

Load case 3 : DL + EQ
4 : DL − EQ

* $S_{12}$ should be used instead of $S_{VM}$, however, stress ratios are very small. OK

**URS Consultants**
**URS/John A. Blume & Associates, Engineers**

Job no. 66458-01 Job WHC/MPF ANALYSIS
Client
Subject MANIFOLD TUBE
(PART NO. 42-5)

Sheet No. 6.23
Calc. No.
Rev. No.
By PM Date 5/31/94
Chk'd [illegible] Date [illegible]

STRESS CHECK [illegible] THICK MANIFOLD TUBE

MAT'L 304 SS TUBING ASTM A312/SA312

$f_y$ = 25 ksi $f_u$ = 70 ksi

This is an error. The thickness of the manifold tube should be 1" instead of 2". Overall [illegible] should be minimal because the stress ratios were small. The stress ratios should be "doubled" to acct for t=1 instead of 2. Also, stresses were low. Say OK! PM 7/29/94

RIK 8/3/94

ALLOWABLE STRESSES:

BENDING = 1.6 (0.6 $f_y$) = 24 ksi

SHEAR = 1.4 (0.4 $f_y$) = 14 ksi

SAP90 RESULTS:

FROM SAPLOT of ELEMENT STRESSES, MAX. ARE

| | LOAD CASE | MAX STRESSES (ksi) | ALLOWABLE STRESSES (ksi) | STRESS RATIO |
|---|---|---|---|---|
| $S_{MX}$ (top) | 3 | 0.22 | 24 | 0.00917 |
| $S_{MX}$ (Bot) | 3 | 0.493 | 24 | 0.02054 |
| $S_{VM}$* (SHEAR) | 3 | ~~0.445~~ 0.445×2 = 0.890 | 14 | 0.03178 ← 0.03178×2 = 0.0636 |
| $S_{MX}$ (top) | 4 | -0.0504 | 24 | 0.0015 |
| $S_{MX}$ (Bot) | 4 | -0.0927 | 24 | 0.00276 |
| $S_{VM}$* (SHEAR) | 4 | 0.346 | 14 | 0.01765 |

* $S_{12}$ should be used instead of $S_{VM}$, however, stress ratios are very small, ok.

**URS Consultants**
**URS/John A. Blume & Associates, Engineers**

Job no. 66458-01 Job WHC/ MPF ANALYSIS
Client
Subject FLANGE PLATE
(PART NO 42-7)

Sheet No. 6.2+
Calc. No.
Rev. No.
By PKL Date 5/31/94
Chk'd [illegible] Date 7/13/94

STRESS CHECK FOR 3/4 THICK FLANGE PLATE

MAT'L · 304 SS ASTM A240 (304 $f_y$ = 30 ksi $f_u$ = 75 ksi; 304L $f_y$ = 25 ksi $f_u$ = 70 ksi) ← use

$f_y$ = 25 Ksi $f_u$ = 70 Ksi

ALLOWABLE STRESSES

BENDING = 1.6 (0.6 $f_y$)
= 24 Ksi < 0.7 $f_u$ = 49 Ksi ok

SHEAR = 1.4 (0.4 $f_y$)
= 14 Ksi

SAP90 RESULTS

FROM SAPLOT of ELEMENT STRESSES, MAX. ARE

| | LOAD CASE | MAX STRESSES (Ksi) | ALLOWABLE STRESSES (Ksi) | STRESS RATIO |
|---|---|---|---|---|
| SMX (top) | 3 | 2.57 | 24 | 0.107 |
| SMX (Bot) | 3 | 3.30 | 24 | 0.135 |
| SVM* (SHEAR) | 3 | 2.94 | 14 | 0.21 ← |
| SMX (Top) | 4 | -1.95 | 24 | 0.081 |
| SMX (Bot) | 4 | -1.79 | 24 | 0.0745 |
| SVM* (SHEAR) | 4 | 2.73 | 14 | 0.195 |

* Sz should be used instead of SVM, however, stress ratios are small ok

**URS Consultants**
**URS/John A. Blume & Associates, Engineers**

Job no. 66481-01 Job WHC/MPF ANALYSIS
Client
Subject FLANGE PLATE
CHECK PUNCHING SHEAR

Sheet No. 625
Calc. No.
Rev. No.
By PLW Date 6/3/94
Chk'd Date

CHECK PUNCHING SHEAR OF
PIPES THRU FLANGE PLATE

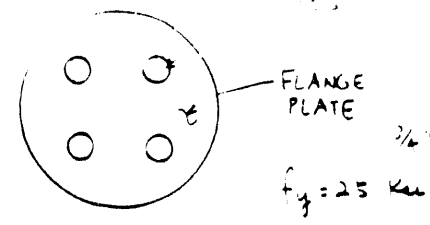


MAX PIPE AXIAL FORCE = 1.13 K (SEE ATTACHED)

PIPE OD = 1.66"

PIPE OUTSIDE PERIMETER = $\pi D = 1.66\pi = 5.21''$

SHEAR STRESS ON PLATE = $\dfrac{1.13^K}{5.21'' \times 3/4''} = 0.289$ Ksi

ALLOWABLE STRESS $1.4\,(0.4\,f_y) = 1.4(0.4 \times 25) = 14$ Ksi

STRESS RATIO : $\dfrac{0.289}{14} = 0.0206 \ll 1$ OK

3 of 4

ENVELOP of AXIAL FORCES

06/03/1994 11:16 Filename: CM-A-04.OUT Page 1

| Element I.D | Load Case | Minimum | Load Case | Maximum |
|---|---|---|---|---|
| 101 | 4 | -0.04 | 3 | 0.08 |
| 102 | 4 | -0.05 | 3 | 0.09 |
| 103 | 4 | -0.06 | 3 | 0.11 |
| 104 | 4 | -0.06 | 3 | 0.11 |
| 105 | 4 | -0.04 | 3 | 0.08 |
| 106 | 4 | -0.04 | 3 | 0.08 |
| 107 | 4 | -0.05 | 3 | 0.09 |
| 108 | 4 | -0.06 | 3 | 0.1 |
| 109 | 4 | -0.06 | 3 | 0.09 |
| 110 | 4 | -0.03 | 3 | 0.07 |
| 111 | 4 | -0.03 | 3 | 0.07 |
| 112 | 4 | -0.04 | 3 | 0.08 |
| 113 | 4 | -0.05 | 3 | 0.09 |
| 114 | 4 | -0.04 | 3 | 0.09 |
| 115 | 4 | -0.03 | 3 | 0.07 |
| 116 | 4 | -0.03 | 3 | 0.07 |
| 117 | 4 | -0.04 | 3 | 0.08 |
| 118 | 4 | -0.05 | 3 | 0.10 |
| 119 | 4 | -0.05 | 3 | 0.10 |
| 120 | 4 | -0.04 | 3 | 0.08 |
| 201 | 4 | -0.89 | 3 | 1.06 |
| 202 | 4 | -0.95 | 3 | 1.0 |
| 203 | 4 | -0.88 | 3 | 1.06 |
| 204 | 4 | -0.83 | 3 | 1.13 ← MAX |
| 205 | 4 | -0.84 | 3 | 1.00 |
| 206 | 4 | -0.89 | 3 | 0.93 |
| 207 | 4 | -0.82 | 3 | 0.99 |
| 208 | 4 | -0.77 | 3 | 1.06 |
| 209 | 4 | -0.39 | 3 | 0.47 |
| 210 | 4 | -0.42 | 3 | 0.44 |
| 211 | 4 | -0.39 | 3 | 0.47 |
| 212 | 4 | -0.36 | 3 | 0.50 |
| 213 | 4 | -0.39 | 3 | 0.47 |
| 214 | 4 | -0.42 | 3 | 0.44 |
| 215 | 4 | -0.39 | 3 | 0.47 |
| 216 | 4 | -0.36 | 3 | 0.50 |
| 217 | 4 | -0.74 | 3 | 0.90 |
| 218 | 4 | -0.80 | 3 | 0.83 |
| 219 | 4 | -0.73 | 3 | 0.88 |
| 220 | 4 | -0.68 | 3 | 0.95 |
| 221 | 4 | -0.69 | 3 | 0.84 |
| 222 | 4 | -0.76 | 3 | 0.78 |
| 223 | 4 | -0.69 | 3 | 0.84 |
| 224 | 4 | -0.63 | 3 | 0.91 |
| 225 | 4 | -0.66 | 3 | 0.80 |
| 226 | 4 | -0.72 | 3 | 0.73 |
| 227 | 4 | -0.64 | 3 | 0.79 |
| 228 | 4 | -0.59 | 3 | 0.86 |
| 229 | 4 | -0.61 | 3 | 0.75 |
| 230 | 4 | -0.67 | 3 | 0.69 |
| 231 | 4 | -0.61 | 3 | 0.74 |
| 232 | 4 | -0.55 | 3 | 0.81 |
| 233 | 4 | -0.56 | 3 | 0.69 |
| 234 | 4 | -0.62 | 3 | 0.62 |
| 235 | 4 | -0.54 | 3 | 0.67 |
| 236 | 4 | -0.49 | 3 | 0.75 |
| 237 | 4 | -0.48 | 3 | 0.61 |
| 238 | 4 | -0.54 | 3 | 0.55 |
| 239 | 4 | -0.48 | 3 | 0.61 |
| 240 | 4 | -0.42 | 3 | 0.67 |
| 241 | 4 | -0.35 | 3 | 0.46 |
| 242 | 4 | -0.40 | 2 | 0.39 |
| 243 | 4 | -0.34 | 3 | 0.46 |
| 244 | 4 | -0.28 | 3 | 0.51 |

SS PIPES

06/03/1994 11:16 Filename: CM-A-04.OUT Page 2

| | | | | |
|---|---|---|---|---|
| 245 | 4 | -0.30 | 3 | 0.41 |
| 246 | 4 | -0.33 | 2 | 0.32 |
| 247 | 4 | -0.28 | 3 | 0.39 |
| 248 | 4 | -0.21 | 3 | 0.45 |
| 249 | 4 | -0.21 | 3 | 0.32 |
| 250 | 4 | -0.26 | 2 | 0.25 |
| 251 | 4 | -0.22 | 3 | 0.33 |
| 252 | 4 | -0.14 | 3 | 0.36 |
| 253 | 4 | -0.20 | 3 | 0.29 |
| 254 | 4 | -0.26 | 2 | 0.25 |
| 255 | 4 | -0.21 | 3 | 0.31 |
| 256 | 4 | -0.14 | 3 | 0.36 |
| 257 | 4 | -0.18 | 3 | 0.27 |
| 258 | 4 | -0.26 | 2 | 0.24 |
| 259 | 4 | -0.19 | 3 | 0.28 |
| 260 | 4 | -0.14 | 3 | 0.35 |
| 261 | 4 | -0.17 | 3 | 0.25 |
| 262 | 4 | -0.26 | 2 | 0.24 |
| 263 | 4 | -0.18 | 3 | 0.26 |
| 264 | 4 | -0.14 | 3 | 0.35 |
| 265 | 4 | -0.17 | 3 | 0.25 |
| 266 | 4 | -0.25 | 2 | 0.23 |
| 267 | 4 | -0.17 | 3 | 0.24 |
| 268 | 4 | -0.13 | 3 | 0.33 |
| 301 | 4 | -0.02 | 3 | 0.02 |
| 302 | 4 | -0.02 | 2 | 0.02 |
| 303 | 4 | -0.03 | 3 | 0.03 |
| 304 | 4 | -0.03 | 3 | 0.03 |
| 305 | 4 | -0.03 | 3 | 0.03 |
| 306 | 4 | -0.02 | 2 | 0.02 |
| 307 | 4 | -0.02 | 3 | 0.02 |
| 308 | 4 | -0.03 | 3 | 0.03 |
| 309 | 4 | -0.00 | 2 | 0.00 |
| 310 | 4 | -0.00 | 2 | 0.00 |
| 311 | 4 | -0.00 | 2 | 0.00 |
| 312 | 4 | -0.00 | 2 | 0.00 |
| 313 | 4 | -0.00 | 2 | 0.00 |
| 314 | 4 | -0.00 | 2 | 0.00 |
| 315 | 4 | -0.00 | 2 | 0.00 |
| 316 | 4 | -0.00 | 2 | 0.00 |
| 317 | 4 | -0.00 | 2 | 0.00 |
| 318 | 4 | -0.00 | 2 | 0.00 |
| 319 | 4 | -0.00 | 2 | 0.00 |
| 320 | 4 | -0.00 | 2 | 0.00 |
| 321 | 4 | -0.00 | 2 | 0.00 |
| 322 | 4 | -0.00 | 2 | 0.00 |
| 323 | 4 | -0.00 | 2 | 0.00 |
| 324 | 4 | -0.00 | 2 | 0.00 |
| 325 | 4 | -0.03 | 2 | 0.03 |
| 326 | 4 | -0.03 | 2 | 0.03 |
| 327 | 4 | -0.03 | 2 | 0.03 |
| 328 | 4 | -0.03 | 2 | 0.03 |
| 329 | 4 | -0.03 | 2 | 0.03 |
| 330 | 4 | -0.03 | 2 | 0.03 |
| 331 | 4 | -0.03 | 2 | 0.03 |
| 332 | 4 | -0.03 | 2 | 0.03 |
| 333 | 4 | -0.03 | 2 | 0.03 |
| 334 | 4 | -0.03 | 2 | 0.03 |
| 335 | 4 | -0.03 | 2 | 0.03 |
| 336 | 4 | -0.04 | 2 | 0.04 |
| 337 | 4 | -0.04 | 2 | 0.04 |
| 338 | 4 | -0.03 | 2 | 0.03 |
| 339 | 4 | -0.03 | 2 | 0.03 |
| 340 | 4 | -0.03 | 2 | 0.03 |
| 401 | 4 | -0.09 | 3 | 0.09 |
| 402 | 4 | -0.08 | 3 | 0.08 |

SS PIPES

**URS Consultants**
**URS/John A. Blume & Associates, Engineers**

Job no. 06458-01 Job WHC/MPF ANALYSIS
Client
Subject MATING & BOTTOM PLATES
(PART NO 40-3 & 42-2)

Sheet No. 627
Calc. No.
Rev. No.
By PKW Date 5/31/94
Chk'd KM Date 7/12/94

STRESS CHECK IN 3" MATING & BOTTOM PLATES

MAT'L : 300 SERIES SS

$f_y$ = 25 Ksi $f_u$ = 70 Ksi

ALLOWABLE STRESSES :

BENDING = 1.6 (0.6 $f_y$)
= 24 Ksi, < 0.7 $f_u$ = 49 Ksi OK

SHEAR = 1.4 (0.4 $f_y$)
= 14 Ksi < 0.3 $f_u$ = 21 Ksi OK

SAP90 RESULTS :

FROM SAPLOT of ELEMENT STRESSES, MAX ARE :

| | | LOAD CASE | MAX STRESSES (Ksi) | ALLOWABLE STRESSES (Ksi) | STRESS RATIO |
|---|---|---|---|---|---|
| MATING PLATE | SMX (Top) | 3 | 2.72 | 24 | 0.113 |
| | SMX (BOT) | 3 | 2.76 | 24 | 0.115 |
| | SVM* | 3 | 2.60 | 14 | 0.186 |
| | SMX (Top) | 4 | -2.53 | 24 | 0.105 |
| | SMX (BOT) | 4 | -2.42 | 24 | 0.101 |
| | SVM* | 4 | 2.60 | 14 | 0.186 ← |
| BOTTOM PLATE | SMX (Top) | 3 | 0.012 | 24 | 0.0005 |
| | SMX (Bot) | 3 | 0.0181 | 24 | 0.00075 |
| | SVM* | 3 | 0.0157 | 14 | 0.00112 ← |
| | SMX (Top) | 4 | -0.00555 | 24 | 0.00023 |
| | SMX (Bot) | 4 | -0.00886 | 24 | 0.00037 |
| | SVM* | 4 | 0.0157 | 14 | 0.00112 |

* $S_{12}$ should be used, however, stress ratios are very small. OK

## 6.3 Check Beam Element Stresses

SAPSTL analyzed the following beam elements:

- 1.66"O.D. 1.38"I.D. Stainless Steel Pipes
- 3/16" Braces (Note that 1/4" was actually used because the KL/R for 3/16" exceeds 200.
- 3/8" Light Support
- 3/8" Gas Support

Summary of the enveloped stress ratios are given in the following page.

**URS Consultants**
**URS/John A. Blume & Associates, Engineers**

Job no. 66481 01 Job WHC/MPF ANALYSIS
Client
Subject

Sheet No. 6.3.2
Calc. No.
Rev. No.
By PKL Date 6/3/94
Chk'd [illegible] Date 7/3/94

SUMMARY / ENVELOP of STRESS RATIOS FROM SAPSTL OUTPUT

| | STRESS RATIO | ELM No. |
|---|---|---|
| STEEL PIPES | 0.220 | 203 |
| CROSS-BRACES | 0.392 (C)<br>0.356 (T)* | 412 |
| LIGHT SUPPORT | 0.167 | 501 |
| GAS PIPE | 0.067 | 505 |

* SINCE THE CROSS-BRACES WILL BE MODIFIED AS SHOWN IN FIG 9-1 OPTION 4, USE STRESS RATIO FOR TENSION, 0.356.

# 7. CHECK BOLT AND WELD CONNECTIONS

## TABLE OF CONTENTS


| SECTION | CONTENTS | PAGE NO. |
|---|---|---|
| 7.1 | General Discussion | 7.1.1 |
| 7.2 | Check Bolt Connections | 7.2.1 - 7.2.8 |
| 7.3 | Check Weld Connections | 7.3.1 — 7.3.18 |

## 7.1 General Discussion

The following bolts are checked:

Connecting 3" Shielding Plate and 1" Manifold Tube

Bolts: 1/2 -13x5" 18-8 SS
Minimum tensile strength = 70 ksi

Loads: Lift Load (904 lbs) <--------- Control
Dead load plus or minus response spectra

Connecting 3/4" Flange Plate and 20" Riser

Bolts: 1 1/8-7 UNC-2A 6" long A307 GR B
Allowable tensile stress = 20 ksi
Allowable single shear stress = 10 ksi

Loads: 60 psi Hydrogen burn pressure <------ Control
Dead load plus or minus response spectra

The allowable stresses from Attachment C for the bolts were compared with the bolt stresses. Stress ratios were computed and evaluated.

The following weld connections were checked:

| Fillet | Part/Part No. | Part/Part No. |
|---|---|---|
| 3/8" | Flange Plate (42-7) | Manifold Tube (42-5) |
| 3/16" | Flange Plate (42-7) | SS Pipe (42-8) |
| 3/16" | Mating Plate (40-3) | SS Pipe (42-8) |
| 3/16" | Bottom Plate (42-2) | SS Pipe (42-8) |
| 3/16" | Cross Braces (40-5) | SS Pipe (42-8) |
| 1/8" | Light support (40-4) | SS Pipe (42-8) |
| 1/8" | 3/8" Gas Pipe (40-12) | SS Pipe (42-8) |

The allowable stresses from Attachment C for the welds (Fw) were compared with the weld stresses (fw). Stress ratios were computed and evaluated.

## 7.2 Check Bolt Connections

Hand calculations for checking bolt connections are provided in this section.

**URS Consultants**
**URS/John A. Blume & Associates, Engineers**

Job no. 66453-01 Job WHC/MPF ANALYSIS
Client
Subject CHECK BOLTS

Sheet No. 7 2.2
Calc. No.
Rev. No.
By PKC Date 6/6/94
Chk'd [illegible] Date 7/13/94

CHECK 12-3.5' 18-8 SS BOLTS CONNECTING [illegible]

MAT'L 18-8 SS

$f_t$ = 70 Ksi  area of bolt (½" φ) = 0.196 in²

ALLOWABLE STRESSES

$F_t = 16(0.3 \times f_t)$
$= 33.6$ Ksi

LIFT LOAD

TOTAL WT of CAMERA ASSEMBLY = 1227 lb
SHIELDING PLATE ONLY = − 323 lb
904 lb. for 10 bolts or 90.4 lb/BOLT

TRANSPORTATION LOAD FACTOR = 2  2 × 90.4 = 180.8 lb/Bolt

Bolt stress = $\frac{0.1808^k}{0.196}$ = 0.922 Ksi

Stress ratio = $\frac{0.922}{33.6}$ = 0.0275

**URS Consultants**
**URS/John A. Blume & Associates, Engineers**

Job no. 66458-01 Job WHC/MPF ANALYSIS
Client
Subject CHECK BOLTS

Sheet No. 723
Calc. No.
Rev. No.
By PLL Date 5/31/94
Chk'd Date 7/[illegible]

MAT'L A 307 GR B, $D = 1\frac{1}{8}''$ $A_{BOLT} = 0.994\ in^2$

$F_t = 19^K/BOLT$ (THREADED FASTENERS)
$F_v = 9.9^K/BOLT$

ALLOWABLE TENSION & SHEAR FORCES

$F_t = 1.6(19^K/bolt) = 30.4^K/bolt$

$F_v = 1.4(9.9^K/bolt) = 13.86^K/bolt$

SAP90 RESULTS

| | | TENSION | | | SHEAR | | |
|---|---|---|---|---|---|---|---|
| ELMT NO. | LOAD CASE | FORCE (K) | ALLOWABLE ($F_t$) | STRESS RATIO | FORCE (K) | ALLOWABLE ($F_v$) | STRESS RATIO |
| 101 | 3 | 0.207 | $30.4^K$ | | 0.098 | $13.86^K$ | |
| 102 | 3 | 0.207 | | | 0.107 | | |
| 103 | 3 | 0.211 | | | 0.105 | | |
| 104 | 3 | 0.212 | | | 0.100 | | |
| 105 | 3 | 0.204 | | | 0.087 | | |
| 106 | 3 | 0.195 | | | 0.088 | | |
| 107 | 3 | 0.196 | | | 0.091 | | |
| 108 | 3 | 0.202 | | | 0.089 | | |
| 109 | 3 | 0.205 | | | 0.072 | | |
| 110 | 4 | 0.200 | | | 0.080 | | |
| 111 | 4 | 0.195 | | | 0.089 | | |
| 112 | 4 | 0.200 | | | 0.101 | | |
| 113 | 4 | 0.209 | | | 0.108 (MAX) | | 0.00779 |
| 114 | 4 | 0.215 | | | 0.101 | | |
| 115 | 4 | 0.211 | | | 0.096 | | |
| 116 | 4 | 0.207 | | | 0.099 | | |
| 117 | 4 | 0.211 | | | 0.102 | | |
| 118 | 4 | 0.220 | | | 0.098 | | |
| 119 | 4 | 0.223 (MAX) | | 0.00734 | 0.091 | | |
| 120 | 4 | 0.216 | ✓ | | 0.088 | ✓ | |

**URS Consultants**
**URS/John A. Blume & Associates, Engineers**

Job no. 66458-01 Job WHC/MPF ANALYSIS
Client
Subject CHECK BOLTS

Sheet No. - 24
Calc. No.
Rev. No.
By DLL Date 6/1/94
Chk'd KJ Date 7/1/94

CHECK BOLT STRESSES FOR HYDROGEN BURN PRESSURE [illegible]

20 BOLTS @ FLANGE PLATE

20" DRISER : AREA = $\frac{\pi D^2}{4} = \frac{\pi (19)^2}{4} = 283.53$

I.D. = 19"

$F = 283.53(60\ psi) = 17{,}011\ lb = 17.011\ Kips$

FORCE PER BOLT = $\frac{17.011}{20} = 0.851^K$

$F_t = 30.4^K/bolt$

$\frac{D}{C} = \frac{0.851^K}{30.4^K/BOLT} = 0.028 < 1$ (OK for hydrogen burn)

```
   $$$$$$$$     $$$$$$$$$$    $$$$$$$       $$$$$$$$       $$$$$$$
  $$$$$$$$$$   $$$$$$$$$$   $$$$$$$$$$    $$$$$$$$$$    $$$$$$$$$$
 $$           $$     $$   $$       $$  $$       $$   $$       $$
$$           $$     $$   $$       $$  $$       $$   $$       $$
$$$$$$$$    $$$$$$$$$$   $$$$$$$$$$   $$$$$$$$$$   $$       $$
      $$   $$     $$   $$                   $$   $$       $$
     $$   $$     $$   $$                  $$   $$       $$
$$$$$$$$$$   $$     $$   $$            $$$$$$$$$$   $$$$$$$$$$
$$$$$$$$    $$     $$   $$            $$$$$$$$       $$$$$$$
```

STRUCTURAL ANALYSIS PROGRAMS

VERSION P5.40

SHEAR = $\sqrt{(0.063)^2+(0.075)^2}$

= 0.098

Copyright (C) 1978-1992
EDWARD L. WILSON
All rights reserved

| | |
|---|---|
| Wiss/Janney Elstner Associates Consulting Engineers | |
| JOB No. 66458-01 | |
| CALC. No. 7.25 thru 7.28 | |
| BY Pu | DATE 6/6/94 |
| CKD | DATE |





PAGE 1
PROGRAM:SAP90/FILE:CM-A-03.FEF

WHC/MPF CAMERA ASSEMBLY MODEL JOB#: 66458-01 RUN: CM-A-03

F R A M E  E L E M E N T  J O I N T  F O R C E S

ELEMENT ID 101

| LOAD COMBO | JOINT | F(X) | F(Y) | F(Z) | M(X) | M(Y) | M(Z) |
|---|---|---|---|---|---|---|---|
| 1 | | | | | | | |
| | 299 | -0.023 | -0.003 | 0.067 | 0.000 | -0.770 | -0.039 |
| | 201 | 0.023 | 0.003 | -0.067 | 0.000 | -0.070 | -0.001 |
| 2 | | | | | | | |
| | 299 | 0.039 | 0.072 | 0.140 | 0.001 | 1.591 | 0.865 |
| | 201 | 0.039 | 0.072 | 0.140 | 0.001 | 0.155 | 0.029 |
| 3 | | | | | | | |
| | 299 | 0.016 | 0.068 | 0.207 | 0.001 | 0.821 | 0.825 |
| | 201 | 0.063 | 0.075 | 0.072 | 0.001 | 0.085 | 0.028 |
| 4 | | | | | | | |
| | 299 | -0.063 | -0.075 | -0.072 | -0.001 | -2.361 | -0.904 |
| | 201 | -0.016 | -0.068 | -0.207 | -0.001 | -0.225 | -0.031 |

SHEAR

ELEMENT ID 102

| LOAD COMBO | JOINT | F(X) | F(Y) | F(Z) | M(X) | M(Y) | M(Z) |
|---|---|---|---|---|---|---|---|
| 1 | | | | | | | |
| | 299 | -0.022 | -0.009 | 0.065 | 0.230 | -0.707 | -0.023 |
| | 202 | 0.022 | 0.009 | -0.065 | 0.021 | -0.065 | -0.001 |
| 2 | | | | | | | |
| | 299 | 0.053 | 0.067 | 0.142 | 0.498 | 1.533 | 0.855 |
| | 202 | 0.053 | 0.067 | 0.142 | 0.050 | 0.153 | 0.029 |
| 3 | | | | | | | |
| | 299 | 0.032 | 0.058 | 0.207 | 0.728 | 0.826 | 0.831 |
| | 202 | 0.075 | 0.076 | 0.077 | 0.071 | 0.088 | 0.029 |
| 4 | | | | | | | |
| | 299 | -0.075 | -0.076 | -0.077 | -0.268 | -2.240 | -0.878 |
| | 202 | -0.032 | -0.058 | -0.207 | -0.029 | -0.218 | -0.030 |

ELEMENT ID 103

| LOAD COMBO | JOINT | F(X) | F(Y) | F(Z) | M(X) | M(Y) | M(Z) |
|---|---|---|---|---|---|---|---|
| 1 | | | | | | | |
| | 299 | -0.018 | -0.016 | 0.063 | 0.422 | -0.580 | -0.025 |
| | 203 | 0.018 | 0.016 | -0.063 | 0.039 | -0.054 | -0.001 |
| 2 | | | | | | | |
| | 299 | 0.064 | 0.050 | 0.149 | 0.987 | 1.359 | 0.684 |
| | 203 | 0.064 | 0.050 | 0.149 | 0.105 | 0.144 | 0.021 |
| 3 | | | | | | | |
| | 299 | 0.046 | 0.035 | 0.211 | 1.409 | 0.779 | 0.659 |
| | 203 | 0.082 | 0.066 | 0.086 | 0.144 | 0.090 | 0.020 |
| 4 | | | | | | | |
| | 299 | -0.082 | -0.066 | -0.086 | -0.565 | -1.939 | -0.709 |
| | 203 | -0.046 | -0.035 | -0.211 | -0.066 | -0.197 | -0.022 |



7.25

PAGE 2
PROGRAM:SAP90/FILE:CM-A-03.FEF
WHC/MPF CAMERA ASSEMBLY MODEL JOB#: 66458-01 RUN: CM-A-03

F R A M E  E L E M E N T  J O I N T  F O R C E S

ELEMENT ID 104 ----------

| LOAD COMBO | JOINT | F(X) | F(Y) | F(Z) | M(X) | M(Y) | M(Z) |
|---|---|---|---|---|---|---|---|
| 1 | | | | | | | |
| | 299 | -0.010 | -0.020 | 0.060 | 0.558 | -0.406 | -0.043 |
| | 204 | 0.010 | 0.020 | -0.060 | 0.051 | -0.037 | -0.001 |
| 2 | | | | | | | |
| | 299 | 0.048 | 0.061 | 0.152 | 1.390 | 1.009 | 0.567 |
| | 204 | 0.048 | 0.061 | 0.152 | 0.148 | 0.108 | 0.019 |
| 3 | | | | | | | |
| | 299 | 0.037 | 0.040 | 0.212 | 1.949 | 0.603 | 0.524 |
| | 204 | 0.058 | 0.081 | 0.092 | 0.199 | 0.071 | 0.018 |
| 4 | | | | | | | |
| | 299 | -0.058 | -0.081 | -0.092 | -0.832 | -1.415 | -0.610 |
| | 204 | -0.037 | -0.040 | -0.212 | -0.096 | -0.146 | -0.020 |

ELEMENT ID 105 ----------

| LOAD COMBO | JOINT | F(X) | F(Y) | F(Z) | M(X) | M(Y) | M(Z) |
|---|---|---|---|---|---|---|---|
| 1 | | | | | | | |
| | 299 | -0.002 | -0.021 | 0.058 | 0.629 | -0.204 | -0.051 |
| | 205 | 0.002 | 0.021 | -0.058 | 0.057 | -0.019 | -0.002 |
| 2 | | | | | | | |
| | 299 | 0.055 | 0.045 | 0.147 | 1.583 | 0.514 | 0.726 |
| | 205 | 0.055 | 0.045 | 0.147 | 0.160 | 0.052 | 0.025 |
| 3 | | | | | | | |
| | 299 | 0.053 | 0.024 | 0.204 | 2.212 | 0.310 | 0.675 |
| | 205 | 0.058 | 0.065 | 0.089 | 0.217 | 0.034 | 0.023 |
| 4 | | | | | | | |
| | 299 | -0.058 | -0.065 | -0.089 | -0.954 | -0.718 | -0.777 |
| | 205 | -0.053 | -0.024 | -0.204 | -0.103 | -0.071 | -0.027 |

ELEMENT ID 106 ----------

| LOAD COMBO | JOINT | F(X) | F(Y) | F(Z) | M(X) | M(Y) | M(Z) |
|---|---|---|---|---|---|---|---|
| 1 | | | | | | | |
| | 299 | 0.003 | -0.019 | 0.055 | 0.634 | 0.000 | -0.040 |
| | 206 | -0.003 | 0.019 | -0.055 | 0.057 | 0.000 | -0.001 |
| 2 | | | | | | | |
| | 299 | 0.069 | 0.039 | 0.139 | 1.589 | 0.001 | 0.839 |
| | 206 | 0.069 | 0.039 | 0.139 | 0.154 | 0.001 | 0.028 |
| 3 | | | | | | | |
| | 299 | 0.073 | 0.020 | 0.195 | 2.223 | 0.001 | 0.799 |
| | 206 | 0.066 | 0.058 | 0.084 | 0.211 | 0.001 | 0.027 |
| 4 | | | | | | | |
| | 299 | -0.066 | -0.058 | -0.084 | -0.955 | -0.001 | -0.879 |
| | 206 | -0.073 | -0.020 | -0.195 | -0.098 | -0.001 | -0.030 |



PAGE 3
PROGRAM:SAP90/FILE:CM-A-03.FEF
WHC/MPF CAMERA ASSEMBLY MODEL JOB#: 66458-01 RUN: CM-A-03

F R A M E  E L E M E N T  J O I N T  F O R C E S

ELEMENT ID 107 ----------

| LOAD COMBO | JOINT | F(X) | F(Y) | F(Z) | M(X) | M(Y) | M(Z) |
|---|---|---|---|---|---|---|---|
| 1 | | | | | | | |
| | 299 | 0.008 | -0.017 | 0.053 | 0.582 | 0.189 | -0.022 |
| | 207 | -0.008 | 0.017 | -0.053 | 0.052 | 0.017 | -0.001 |
| 2 | | | | | | | |
| | 299 | 0.064 | 0.054 | 0.142 | 1.537 | 0.499 | 0.830 |
| | 207 | 0.064 | 0.054 | 0.142 | 0.154 | 0.050 | 0.029 |
| 3 | | | | | | | |
| | 299 | 0.072 | 0.037 | 0.196 | 2.120 | 0.689 | 0.808 |
| | 207 | 0.057 | 0.071 | 0.089 | 0.206 | 0.067 | 0.028 |
| 4 | | | | | | | |
| | 299 | -0.057 | -0.071 | -0.089 | -0.955 | -0.310 | -0.852 |
| | 207 | -0.072 | -0.037 | -0.196 | -0.102 | -0.033 | -0.029 |

ELEMENT ID 108 ----------

| LOAD COMBO | JOINT | F(X) | F(Y) | F(Z) | M(X) | M(Y) | M(Z) |
|---|---|---|---|---|---|---|---|
| 1 | | | | | | | |
| | 299 | 0.012 | -0.015 | 0.052 | 0.486 | 0.353 | -0.006 |
| | 208 | -0.012 | 0.015 | -0.052 | 0.044 | 0.032 | 0.000 |
| 2 | | | | | | | |
| | 299 | 0.047 | 0.066 | 0.149 | 1.365 | 0.991 | 0.643 |
| | 208 | 0.047 | 0.066 | 0.149 | 0.145 | 0.106 | 0.022 |
| 3 | | | | | | | |
| | 299 | 0.059 | 0.051 | 0.202 | 1.851 | 1.344 | 0.637 |
| | 208 | 0.036 | 0.081 | 0.097 | 0.188 | 0.137 | 0.022 |
| 4 | | | | | | | |
| | 299 | -0.036 | -0.081 | -0.097 | -0.878 | -0.638 | -0.650 |
| | 208 | -0.059 | -0.051 | -0.202 | -0.101 | -0.074 | -0.022 |

ELEMENT ID 109 ----------

| LOAD COMBO | JOINT | F(X) | F(Y) | F(Z) | M(X) | M(Y) | M(Z) |
|---|---|---|---|---|---|---|---|
| 1 | | | | | | | |
| | 299 | 0.015 | -0.011 | 0.052 | 0.353 | 0.486 | 0.006 |
| | 209 | -0.015 | 0.011 | -0.052 | 0.032 | 0.044 | 0.000 |
| 2 | | | | | | | |
| | 299 | 0.061 | 0.045 | 0.153 | 1.013 | 1.396 | 0.547 |
| | 209 | 0.061 | 0.045 | 0.153 | 0.109 | 0.148 | 0.020 |
| 3 | | | | | | | |
| | 299 | 0.076 | 0.033 | 0.205 | 1.367 | 1.883 | 0.553 |
| | 209 | 0.046 | 0.056 | 0.100 | 0.140 | 0.192 | 0.020 |
| 4 | | | | | | | |
| | 299 | -0.046 | -0.056 | -0.100 | -0.660 | -0.910 | -0.541 |
| | 209 | -0.076 | -0.033 | -0.205 | -0.077 | -0.105 | -0.019 |





726

PAGE 4
PROGRAM:SAP90/FILE:CM-A-03.FEF
WHC/MPF CAMERA ASSEMBLY MODEL JOB#: 66458-01 RUN: CM-A-03

F R A M E  E L E M E N T  J O I N T  F O R C E S

ELEMENT ID 110 ----------

| LOAD COMBO | JOINT | F(X) | F(Y) | F(Z) | M(X) | M(Y) | M(Z) |
|---|---|---|---|---|---|---|---|
| 1 | | | | | | | |
| | 299 | 0.017 | -0.007 | 0.053 | 0.189 | 0.582 | 0.022 |
| | 210 | -0.017 | 0.007 | -0.053 | 0.017 | 0.052 | 0.001 |
| 2 | | | | | | | |
| | 299 | 0.047 | 0.055 | 0.147 | 0.515 | 1.586 | 0.724 |
| | 210 | 0.047 | 0.055 | 0.147 | 0.053 | 0.160 | 0.025 |
| 3 | | | | | | | |
| | 299 | 0.064 | 0.048 | 0.200 | 0.704 | 2.168 | 0.746 |
| | 210 | 0.029 | 0.063 | 0.094 | 0.069 | 0.212 | 0.025 |
| 4 | | | | | | | |
| | 299 | -0.029 | -0.063 | -0.094 | -0.326 | -1.004 | -0.702 |
| | 210 | -0.064 | -0.048 | -0.200 | -0.036 | -0.108 | -0.024 |

ELEMENT ID 111 ----------

| LOAD COMBO | JOINT | F(X) | F(Y) | F(Z) | M(X) | M(Y) | M(Z) |
|---|---|---|---|---|---|---|---|
| 1 | | | | | | | |
| | 299 | 0.019 | -0.003 | 0.055 | 0.000 | 0.633 | 0.040 |
| | 211 | -0.019 | 0.003 | -0.055 | 0.000 | 0.057 | 0.001 |
| 2 | | | | | | | |
| | 299 | 0.041 | 0.069 | 0.140 | 0.001 | 1.593 | 0.839 |
| | 211 | 0.041 | 0.069 | 0.140 | 0.001 | 0.155 | 0.028 |
| 3 | | | | | | | |
| | 299 | 0.060 | 0.066 | 0.195 | 0.001 | 2.226 | 0.879 |
| | 211 | 0.022 | 0.073 | 0.085 | 0.001 | 0.212 | 0.030 |
| 4 | | | | | | | |
| | 299 | -0.022 | -0.073 | -0.085 | -0.001 | -0.959 | -0.799 |
| | 211 | -0.060 | -0.066 | -0.195 | -0.001 | -0.099 | -0.027 |

ELEMENT ID 112 ----------

| LOAD COMBO | JOINT | F(X) | F(Y) | F(Z) | M(X) | M(Y) | M(Z) |
|---|---|---|---|---|---|---|---|
| 1 | | | | | | | |
| | 299 | 0.021 | 0.002 | 0.058 | -0.204 | 0.628 | 0.050 |
| | 212 | -0.021 | -0.002 | -0.058 | -0.019 | 0.057 | 0.002 |
| 2 | | | | | | | |
| | 299 | 0.055 | 0.065 | 0.142 | 0.499 | 1.535 | 0.830 |
| | 212 | 0.055 | 0.065 | 0.142 | 0.050 | 0.154 | 0.029 |
| 3 | | | | | | | |
| | 299 | 0.076 | 0.067 | 0.200 | 0.295 | 2.164 | 0.881 |
| | 212 | 0.035 | 0.062 | 0.085 | 0.032 | 0.211 | 0.030 |
| 4 | | | | | | | |
| | 299 | -0.035 | -0.062 | -0.085 | -0.703 | -0.907 | -0.780 |
| | 212 | -0.076 | -0.067 | -0.200 | -0.069 | -0.097 | -0.027 |



PAGE 5
PROGRAM:SAP90/FILE:CM-A-03.FEF
WHC/MPF CAMERA ASSEMBLY MODEL JOB#: 66458-01 RUN: CM-A-03

F R A M E  E L E M E N T  J O I N T  F O R C E S

ELEMENT ID 113 ----------

| LOAD COMBO | JOINT | F(X) | F(Y) | F(Z) | M(X) | M(Y) | M(Z) |
|---|---|---|---|---|---|---|---|
| 1 | | | | | | | |
| | 299 | 0.020 | 0.011 | 0.060 | -0.405 | 0.557 | 0.042 |
| | 213 | -0.020 | -0.011 | -0.060 | -0.037 | 0.051 | 0.001 |
| 2 | | | | | | | |
| | 299 | 0.067 | 0.052 | 0.149 | 0.987 | 1.359 | 0.654 |
| | 213 | 0.067 | 0.052 | 0.149 | 0.105 | 0.144 | 0.022 |
| 3 | | | | | | | |
| | 299 | 0.088 | 0.063 | 0.209 | 0.582 | 1.917 | 0.696 |
| | 213 | 0.047 | 0.042 | 0.088 | 0.068 | 0.196 | 0.023 |
| 4 | | | | | | | |
| | 299 | -0.047 | -0.042 | -0.088 | -1.392 | -0.802 | -0.612 |
| | 213 | -0.088 | -0.063 | -0.209 | -0.143 | -0.093 | -0.020 |

ELEMENT ID 114 ----------

| LOAD COMBO | JOINT | F(X) | F(Y) | F(Z) | M(X) | M(Y) | M(Z) |
|---|---|---|---|---|---|---|---|
| 1 | | | | | | | |
| | 299 | 0.016 | 0.018 | 0.063 | -0.579 | 0.421 | 0.025 |
| | 214 | -0.016 | -0.018 | -0.063 | -0.054 | 0.039 | 0.001 |
| 2 | | | | | | | |
| | 299 | 0.045 | 0.062 | 0.152 | 1.391 | 1.010 | 0.576 |
| | 214 | 0.045 | 0.062 | 0.152 | 0.148 | 0.108 | 0.018 |
| 3 | | | | | | | |
| | 299 | 0.061 | 0.080 | 0.215 | 0.812 | 1.430 | 0.601 |
| | 214 | 0.030 | 0.044 | 0.090 | 0.094 | 0.147 | 0.019 |
| 4 | | | | | | | |
| | 299 | -0.030 | -0.044 | -0.090 | -1.970 | -0.589 | -0.550 |
| | 214 | -0.061 | -0.080 | -0.215 | -0.201 | -0.070 | -0.018 |

ELEMENT ID 115 ----------

| LOAD COMBO | JOINT | F(X) | F(Y) | F(Z) | M(X) | M(Y) | M(Z) |
|---|---|---|---|---|---|---|---|
| 1 | | | | | | | |
| | 299 | 0.009 | 0.021 | 0.065 | -0.706 | 0.229 | 0.024 |
| | 215 | -0.009 | -0.021 | -0.065 | -0.065 | 0.021 | 0.001 |
| 2 | | | | | | | |
| | 299 | 0.056 | 0.048 | 0.146 | 1.581 | 0.513 | 0.746 |
| | 215 | 0.056 | 0.048 | 0.146 | 0.160 | 0.052 | 0.025 |
| 3 | | | | | | | |
| | 299 | 0.065 | 0.070 | 0.211 | 0.875 | 0.743 | 0.771 |
| | 215 | 0.047 | 0.027 | 0.082 | 0.096 | 0.073 | 0.026 |
| 4 | | | | | | | |
| | 299 | -0.047 | -0.027 | -0.082 | -2.287 | -0.284 | -0.722 |
| | 215 | -0.065 | -0.070 | -0.211 | -0.225 | -0.031 | -0.024 |

PAGE 6
PROGRAM:SAP90/FILE:CM-A-03.FEF
WHC/MPF CAMERA ASSEMBLY MODEL JOB#: 66458-01 RUN: CM-A-03

F R A M E  E L E M E N T  J O I N T  F O R C E S

ELEMENT ID 116 ----------

| LOAD COMBO | JOINT | F(X) | F(Y) | F(Z) | M(X) | M(Y) | M(Z) |
|---|---|---|---|---|---|---|---|
| 1 | | | | | | | |
| | 299 | 0.003 | 0.023 | 0.067 | -0.769 | 0.000 | 0.040 |
| | 216 | -0.003 | -0.023 | -0.067 | -0.070 | 0.000 | 0.001 |
| 2 | | | | | | | |
| | 299 | 0.072 | 0.041 | 0.140 | 1.591 | 0.001 | 0.867 |
| | 216 | 0.072 | 0.041 | 0.140 | 0.155 | 0.001 | 0.029 |
| 3 | | | | | | | |
| | 299 | 0.075 | 0.064 | 0.207 | 0.822 | 0.001 | 0.907 |
| | 216 | 0.068 | 0.018 | 0.073 | 0.085 | 0.001 | 0.031 |
| 4 | | | | | | | |
| | 299 | -0.068 | -0.018 | -0.073 | -2.360 | -0.001 | -0.827 |
| | 216 | -0.075 | -0.064 | -0.207 | -0.225 | -0.001 | -0.028 |

ELEMENT ID 117 ----------

| LOAD COMBO | JOINT | F(X) | F(Y) | F(Z) | M(X) | M(Y) | M(Z) |
|---|---|---|---|---|---|---|---|
| 1 | | | | | | | |
| | 299 | -0.004 | 0.025 | 0.069 | -0.753 | -0.244 | 0.048 |
| | 217 | 0.004 | -0.025 | -0.069 | -0.070 | -0.023 | 0.002 |
| 2 | | | | | | | |
| | 299 | 0.067 | 0.055 | 0.142 | 1.538 | 0.500 | 0.857 |
| | 217 | 0.067 | 0.055 | 0.142 | 0.154 | 0.050 | 0.029 |
| 3 | | | | | | | |
| | 299 | 0.064 | 0.080 | 0.212 | 0.786 | 0.255 | 0.906 |
| | 217 | 0.071 | 0.030 | 0.073 | 0.085 | 0.028 | 0.031 |
| 4 | | | | | | | |
| | 299 | -0.071 | -0.030 | -0.073 | -2.291 | -0.744 | -0.809 |
| | 217 | -0.064 | -0.080 | -0.212 | -0.224 | -0.073 | -0.027 |

ELEMENT ID 118 ----------

| LOAD COMBO | JOINT | F(X) | F(Y) | F(Z) | M(X) | M(Y) | M(Z) |
|---|---|---|---|---|---|---|---|
| 1 | | | | | | | |
| | 299 | -0.015 | 0.024 | 0.070 | -0.651 | -0.473 | 0.023 |
| | 218 | 0.015 | -0.024 | -0.070 | -0.061 | -0.045 | 0.001 |
| 2 | | | | | | | |
| | 299 | 0.055 | 0.066 | 0.149 | 1.365 | 0.991 | 0.693 |
| | 218 | 0.055 | 0.066 | 0.149 | 0.145 | 0.106 | 0.021 |
| 3 | | | | | | | |
| | 299 | 0.040 | 0.089 | 0.220 | 0.714 | 0.518 | 0.716 |
| | 218 | 0.070 | 0.042 | 0.079 | 0.083 | 0.061 | 0.022 |
| 4 | | | | | | | |
| | 299 | -0.070 | -0.042 | -0.079 | -2.016 | -1.464 | -0.670 |
| | 218 | -0.040 | -0.089 | -0.220 | -0.206 | -0.150 | -0.020 |



PAGE 7
PROGRAM:SAP90/FILE:CM-A-03.FEF
WHC/MPF CAMERA ASSEMBLY MODEL JOB#: 66458-01 RUN: CM-A-03

F R A M E  E L E M E N T  J O I N T  F O R C E S

ELEMENT ID 119 ----------

| LOAD COMBO | JOINT | F(X) | F(Y) | F(Z) | M(X) | M(Y) | M(Z) |
|---|---|---|---|---|---|---|---|
| 1 | | | | | | | |
| | 299 | -0.024 | 0.015 | 0.070 | -0.473 | -0.651 | -0.023 |
| | 219 | 0.024 | -0.015 | -0.070 | -0.045 | -0.061 | -0.001 |
| 2 | | | | | | | |
| | 299 | 0.061 | 0.048 | 0.153 | 1.014 | 1.397 | 0.590 |
| | 219 | 0.061 | 0.048 | 0.153 | 0.109 | 0.149 | 0.018 |
| 3 | | | | | | | |
| | 299 | 0.038 | 0.063 | 0.223 | 0.541 | 0.746 | 0.567 |
| | 219 | 0.085 | 0.033 | 0.082 | 0.064 | 0.087 | 0.017 |
| 4 | | | | | | | |
| | 299 | -0.085 | -0.033 | -0.082 | -1.487 | -2.048 | -0.613 |
| | 219 | -0.038 | -0.063 | -0.223 | -0.154 | -0.210 | -0.018 |

ELEMENT ID 120 ----------

| LOAD COMBO | JOINT | F(X) | F(Y) | F(Z) | M(X) | M(Y) | M(Z) |
|---|---|---|---|---|---|---|---|
| 1 | | | | | | | |
| | 299 | -0.025 | 0.004 | 0.069 | -0.245 | -0.753 | -0.048 |
| | 220 | 0.025 | -0.004 | -0.069 | -0.023 | -0.070 | -0.002 |
| 2 | | | | | | | |
| | 299 | 0.047 | 0.056 | 0.147 | 0.516 | 1.589 | 0.745 |
| | 220 | 0.047 | 0.056 | 0.147 | 0.053 | 0.161 | 0.025 |
| 3 | | | | | | | |
| | 299 | 0.022 | 0.060 | 0.216 | 0.271 | 0.836 | 0.697 |
| | 220 | 0.071 | 0.052 | 0.078 | 0.030 | 0.091 | 0.023 |
| 4 | | | | | | | |
| | 299 | -0.071 | -0.052 | -0.078 | -0.761 | -2.342 | -0.793 |
| | 220 | -0.022 | -0.060 | -0.216 | -0.075 | -0.230 | -0.027 |





7.2.8

## 7.3 Check Weld Connections

Hand calculations for checking weld connections are provided in this section.

**URS Consultants, INC.**
**URS/John A. Blume & Associates, Engineers**

Job no. 6481-01 Job NHC/MPF ANALYSIS
Client
Subject CHECK WELD WS

Sheet No. 7.32
Calc. No.
Rev. No.
By [illegible] Date 8/16/94
Chk'd RIK Date 8/16/94

WELD TYPE ASTM 308L $F_u$ = 88 ksi
Reference: Lincoln Stainless Electrode Data
Stainweld Type 308L-16 (AC/DC), The Lincoln Electric Company.

ALLOWABLE WELD CAPACITY (NOT INCLUDE 4 STRESS COEFFICIENT FACTOR)

- 3/8" WELD BETWEEN FLANGE PLATE (42-7) & MANIFOLD TUBE

  FILLET WELD: $0.3 \times 88 \times 0.707 \times (2 \times 3/8) = 14^{K}/in$
  BASE METAL: $0.4 \times 25 \times (2 \times 3/8) = 7.5^{K}/in$ ←

- 3/16" WELD BETWEEN FLANGE PLATE (42-7) & SS PIPES (42-8)

  SS PIPE: O.D = 1.66" I.D. = 1.38" $t = 0.14" < 3/16 = 0.1875"$ WELD*

  BASE METAL: $0.4 \times 25 \times (3/16) = 1.875^{K}/in$ ←

- 3/16" WELD BETWEEN SS PIPES (42-8) & MATING PLATE (40-3)
  " " " " " & BOTTOM PLATE (40-2)

  AGAIN, PIPE $t = 0.14" < 3/16$ WELD*, USE 3/16" WELD

  BASE METAL: $0.4 \times 25 \times (3/16) = 1.875^{K}/in$

- 3/16" WELD BETWEEN SS PIPES (42-8) & CROSS BRACES (40-5)
  AGAIN, USE 3/16" WELD ($t = 0.14" < 3/16$ WELD)

  BASE METAL: $0.4 \times 25 \times (2 \times 3/16) = 3.75^{K}/in$

- 1/8" WELD BETWEEN SS PIPES & LIGHT SUPPORT (40-4)
  SS PIPE (46-6)

  BASE METAL $0.4 \times 25 \times (2 \times 1/8) = 2.5^{K}/in$

* [illegible] 3/16" [illegible]

**URS Consultants, INC.**
**URS/John A. Blume & Associates, Engineers**

Job no. 6481-01 Job WHC/MPF ANALYSIS
Client
Subject

Sheet No. 1.3.3
Calc. No.
Rev. No.
By PK Date 7/28/94
Chk'd RIK Date 8/3/94

## CALCULATION OF WELD PROPERTIES $L_w$, $S_w$

### FLANGE PLATE (42-7) & MANIFOLD TUBE (45-5)

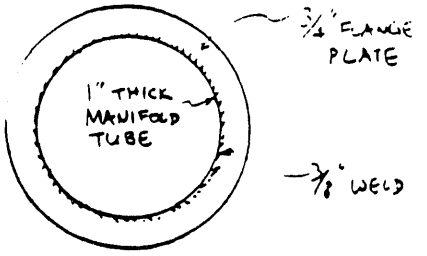


$L_w = \pi D = 22\pi = 69.12''$

$S_w = \pi r^2 = \pi\left(\frac{22}{2}\right)^2 = 380\ in^3/in$

### FLANGE PLATE (42-7) & SS PIPE (42-8)

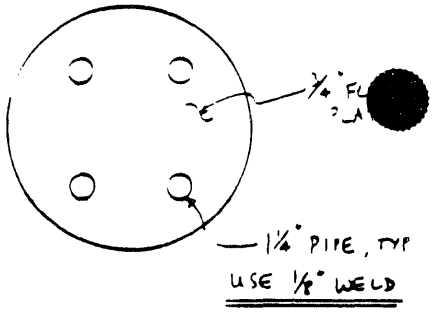


$L_w = \pi D = 1.66\pi = 5.22''$

$S_w = \pi r^2 = \pi\left(\frac{1.66}{2}\right)^2 = 2.164\ in^3/in$

### SS PIPE (42-8) & MATING PLATE (40-3) BOTTOM PLATE (40-2)

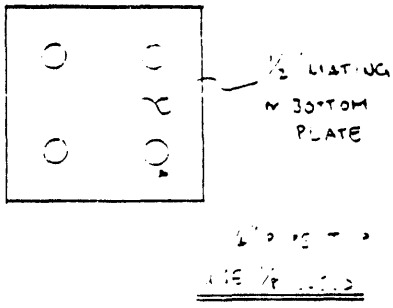


$L_w = \pi D = 1.66\pi = 5.22''$

$S_w = \pi r^2 = \pi\left(\frac{1.66}{2}\right)^2 = 2.164\ in^3/in$

**URS Consultants, INC.**
**URS/John A. Blume & Associates, Engineers**

Job no. 6481-01 Job WHC/MPF ANALYSIS
Client
Subject

Sheet No. 7.34
Calc. No.
Rev. No.
By PKW Date 7/28/94
Chk'd RIK Date 8/3/94

CROSS BRACES (40-5) & SS PIPES (42-8)

$L_w = 1'' + 1'' = 2''$

$S_{w_{xx}} = \frac{d^2}{3} = \frac{1}{3} = 0.33$

$S_{w_{YY}} = bd = 3/16 = 0.1875$

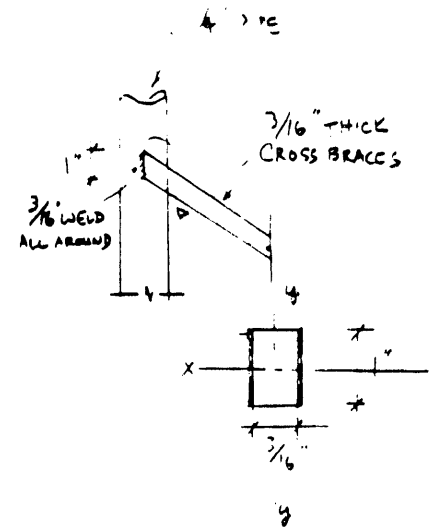


LIGHT SUPPORT (40-4) & SS PIPE (42-8)

$L_w = 2''$

$S_{w_{xx}} = \frac{d^2}{3} = 0.33$

$S_{w_{YY}} = bd = 3/16 = 0.1875$

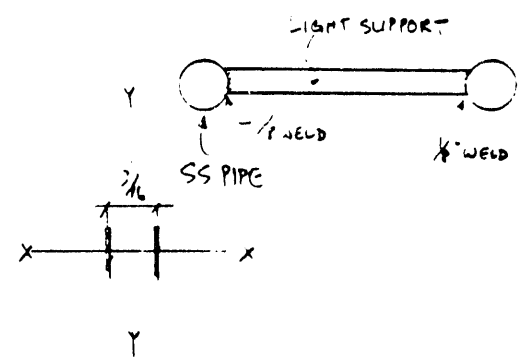


GAS PIPE (40-12) & SS PIPE (42-8)

$L_w = \pi D = 0.675\pi = 2.12''$

$S_w = \pi r^2 = \pi\left(\frac{0.675}{2}\right)^2 = 0.358 \text{ in}^3/\text{in}$

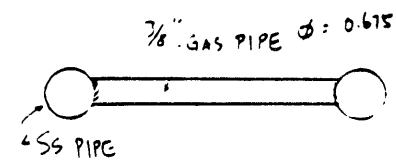

**URS Consultants, INC.**
**URS/John A. Blume & Associates, Engineers**

Job no. 66481-01 Job WHC/MPF ANALYSIS
Client
Subject

Sheet No. 7.3.5
Calc. No.
Rev. No.
By PKW Date 7/28/94
Chk'd RIK Date 8/3/94

## FLANGE PLATE & MANIFOLD TUBE

$S_{22}$ (MAX) = 0.481 Ksi
$S_{12}$ (MAX) = 0.0755 Ksi
} SEE PLOTS ON PAGES 7.3.19 → 7.3.26

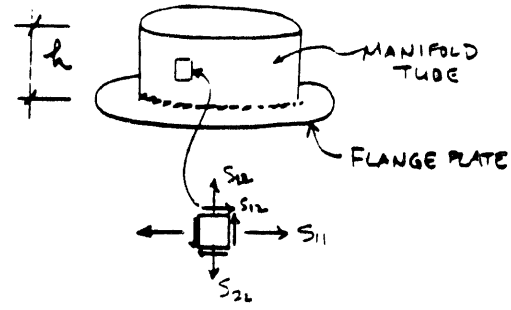


TENSION FORCE PER UNIT LENGTH
0.481(t)(1) = 0.481 K/in
SHEAR FORCE PER UNIT LENGTH
0.0755(t)(1) = 0.0755 K/in

} should be doubled because t=2" was used instead of t=1"

Tension Force = 0.481×2 = 0.962 K/in
Shear Force = 0.0755×2 = 0.1511 K/in

## BEAM ELEMENT FORCES

(SEE Pg 7.3.7 → 7.3.18)

FROM SAP90 .F3F FILE, THE ENVELOPED ELEMENT FORCES ARE TABULATED AS FOLLOWS:

| | BEAM ELEMENT NUMBERS | MAX. 1-2 PLANE SHEAR | MAX. 1-2 PLANE MOMENT | AXIAL | MAX. 1-3 PLANE SHEAR | MAX. 1-3 PLANE MOMENT |
|---|---|---|---|---|---|---|
| FLANGE PLATE/SS PIPES | 201→204 | 0.059 | 0.829 | 1.126 | 0.038 | 0.831 |
| MATING PLATE/SS PIPES | 233→236 | 0.019 | 0.258 | 0.748 | 0.019 | 0.259 |
| BOTTOM PLATE/SS PIPES | 265→268 | 0.043 | 0.687 | 0.333 | 0.040 | 0.770 |
| CROSS BRACES/SS PIPES | 401→420 | 0.050 | 0.350 | 0.116 | 0.001 | 0.008 |
| LIGHT SUPPORT/ " " | 501→503 | 0.003 | 0.027 | 0.006 | 0.017 | 0.112 |
| 3/8" GAS PIPES/ " " | 504→505 | 0.002 | 0.007 | 0.029 | 0.010 | 0.048 |

**WHC/MPF CAMERA ASSEMBLY**

WELD STRESS RATIOS

PROJECT NO: 66481-01
FILENAME: WELDSTR.WQ1

PREPARED BY: PM DATE: 7/28/94
CHECKED BY: RIK DATE: 8/3/94

fw = SQRT [ (Fx/Lw) ^ 2 + (Fy/Lw) ^ 2 + (Fz/Lw + Mxx/Swxx + Myy/Swyy) ^ 2 ]

| CONNECTION | Fx | Fy | Fz | Mxx | Myy | M(srss) | Mxx+My | Lw | Swxx | Swyy | Sw(min) | fw | Fw* | Stress Ratio S.R. |
|---|---|---|---|---|---|---|---|---|---|---|---|---|---|---|
| Flange Plate / Manifold Tube | 0.151 | -- | 0.962 | -- | -- | -- | -- | -- | -- | -- | -- | 0.974 | 10.500 | 0.093 |
| Flange Plate / SS Pipes | 0.059 | 0.058 | 1.126 | 0.829 | 0.831 | 1.174 | | 5.220 | 2.164 | 2.164 | 2.164 | 0.758 | 2.625 | 0.289 |
| Mating Plate / SS Pipes | 0.019 | 0.019 | 0.748 | 0.258 | 0.259 | 0.366 | | 5.220 | 2.164 | 2.164 | 2.164 | 0.312 | 2.625 | 0.119 |
| Bottom Plate / SS Pipes | 0.043 | 0.040 | 0.333 | 0.687 | 0.770 | 1.032 | | 5.220 | 2.164 | 2.164 | 2.164 | 0.541 | 2.625 | 0.206 |
| Cross Braces / SS Pipes | 0.050 | 0.001 | 0.116 | 0.350 | 0.008 | | 0.358 | 2.000 | 0.333 | 0.188 | 0.188 | 1.968 | 5.250 | 0.375 |
| Light Support / SS Pipes | 0.003 | 0.017 | 0.006 | 0.027 | 0.112 | | 0.139 | 2.000 | 0.333 | 0.188 | 0.188 | 0.750 | 3.500 | 0.214 |
| 3/8" Gas Pipes / SS Pipes | 0.002 | 0.010 | 0.029 | 0.007 | 0.048 | 0.049 | | 2.120 | 0.358 | 0.358 | 0.358 | 0.149 | 3.500 | 0.043 |

* Fw = 1.4 * Allowable weld capacity for Extreme Load case (DL +/- EQ)



7.3.6

This Page Intentionally Left Blank

PAGE 9
PROGRAM:SAP90/FILE:CM-A-04.F3F
WHC/MPF CAMERA ASSEMBLY MODEL JOB#: 66458-01 RUN: CM-A-04

F R A M E  E L E M E N T  F O R C E S

| ELT ID | LOAD COMB | DIST END1 | 1-2 PLANE SHEAR | 1-2 PLANE MOMENT | AXIAL FORCE | 1-3 PLANE SHEAR | 1-3 PLANE MOMENT | AXIAL TORQ |
|---|---|---|---|---|---|---|---|---|
| | | 0.000 | 0.195 | 1.055 | | 0.067 | 0.656 | |
| | | 12.500 | 0.195 | 0.219 | | 0.067 | 0.027 | |
| | | 12.500 | | | 0.058 | | | 0.001 |
| | 3 | 0.000 | | | 0.082 | | | 0.001 |
| | | 0.000 | 0.265 | 0.263 | | 0.071 | 0.608 | |
| | | 12.500 | 0.265 | 0.293 | | 0.071 | 0.029 | |
| | | 12.500 | | | 0.082 | | | 0.001 |
| | 4 | 0.000 | | | -0.035 | | | -0.001 |
| | | 0.000 | -0.126 | -1.846 | | -0.063 | -0.703 | |
| | | 12.500 | -0.126 | -0.144 | | -0.063 | -0.025 | |
| | | 12.500 | | | -0.035 | | | -0.001 |
| 201 | | | | | | | | |
| | 1 | 0.000 | | | 0.086 | | | -0.001 |
| | | 0.000 | -0.001 | 0.011 | | -0.001 | 0.013 | |
| | | 12.875 | -0.001 | 0.002 | | -0.001 | 0.002 | |
| | | 12.875 | | | 0.083 | | | -0.001 |
| | 2 | 0.000 | | | 0.974 | | | 0.042 |
| | | 0.000 | 0.049 | 0.744 | | 0.009 | 0.201 | |
| | | 12.875 | 0.049 | 0.098 | | 0.009 | 0.306 | |
| | | 12.875 | | | 0.972 | | | 0.042 |
| | 3 | 0.000 | | | 1.060 | | | 0.041 |
| | | 0.000 | 0.048 | 0.755 | | 0.008 | 0.214 | |
| | | 12.875 | 0.048 | 0.100 | | 0.008 | 0.308 | |
| | | 12.875 | | | 1.055 | | | 0.041 |
| | 4 | 0.000 | | | -0.889 | | | -0.043 |
| | | 0.000 | -0.050 | -0.733 | | -0.010 | -0.188 | |
| | | 12.875 | -0.050 | -0.095 | | -0.010 | -0.303 | |
| | | 12.875 | | | -0.889 | | | -0.043 |
| 202 | | | | | | | | |
| | 1 | 0.000 | | | 0.023 | | | -0.001 |
| | | 0.000 | 0.001 | -0.007 | | -0.001 | 0.007 | |
| | | 12.875 | 0.001 | 0.000 | | -0.001 | -0.004 | |
| | | 12.875 | | | 0.021 | | | -0.001 |
| | 2 | 0.000 | | | 0.976 | | | 0.098 |
| | | 0.000 | 0.009 | 0.176 | | 0.050 | 0.748 | |
| | | 12.875 | 0.009 | 0.280 | | 0.050 | 0.098 | |
| | | 12.875 | | | 0.974 | | | 0.098 |
| | 3 | 0.000 | | | 0.999 | | | 0.097 |
| | | 0.000 | 0.010 | 0.169 | | 0.049 | 0.755 | |
| | | 12.875 | 0.010 | 0.280 | | 0.049 | 0.094 | |
| | | 12.875 | | | 0.995 | | | 0.097 |





PAGE 10
PROGRAM:SAP90/FILE:CM-A-04.F3F
WHC/MPF CAMERA ASSEMBLY MODEL JOB#: 66458-01 RUN: CM A-04

F R A M E  E L E M E N T  F O R C E S

| ELT ID | LOAD COMB | DIST END1 | 1-2 PLANE SHEAR | 1-2 PLANE MOMENT | AXIAL FORCE | 1-3 PLANE SHEAR | 1-3 PLANE MOMENT | AXIAL TORQ |
|---|---|---|---|---|---|---|---|---|
| | 4 | 0.000 | | | -0.953 | | | -0.099 |
| | | 0.000 | -0.008 | -0.183 | | -0.050 | -0.741 | |
| | | 12.875 | -0.008 | -0.281 | | -0.050 | -0.101 | |
| | | 12.875 | | | -0.953 | | | -0.099 |
| 203 | | | | | | | | |
| | 1 | 0.000 | | | 0.087 | | | -0.001 |
| | | 0.000 | 0.001 | -0.010 | | 0.001 | -0.014 | |
| | | 12.875 | 0.001 | 0.005 | | 0.001 | -0.005 | |
| | | 12.875 | | | 0.084 | | | -0.001 |
| | 2 | 0.000 | | | 0.971 | | | 0.128 |
| | | 0.000 | 0.058 | 0.819 | | 0.009 | 0.172 | |
| | | 12.875 | 0.058 | 0.098 | | 0.009 | 0.277 | |
| | | 12.875 | | | 0.969 | | | 0.128 |
| | 3 | 0.000 | | | 1.058 | | | 0.128 |
| | | 0.000 | 0.059 | 0.810 | | 0.010 | 0.158 | |
| | | 12.875 | 0.059 | 0.103 | | 0.010 | 0.272 | |
| | | 12.875 | | | 1.053 | | | 0.128 |
| | 4 | 0.000 | | | -0.885 | | | -0.129 |
| | | 0.000 | -0.056 | -0.829 | | -0.009 | -0.186 | |
| | | 12.875 | -0.056 | -0.093 | | -0.009 | -0.282 | |
| | | 12.875 | | | -0.885 | | | -0.129 |
| 204 | | | | | | | | |
| | 1 | 0.000 | | | 0.149 | | | -0.001 |
| | | 0.000 | -0.001 | 0.020 | | 0.001 | -0.014 | |
| | | 12.875 | -0.001 | 0.007 | | 0.001 | -0.001 | |
| | | 12.875 | | | 0.147 | | | -0.001 |
| | 2 | 0.000 | | | 0.977 | | | 0.096 |
| | | 0.000 | 0.009 | 0.199 | | 0.057 | 0.817 | |
| | | 12.875 | 0.009 | 0.303 | | 0.057 | 0.097 | |
| | | 12.875 | | | 0.975 | | | 0.096 |
| | 3 | 0.000 | | | 1.126 | | | 0.095 |
| | | 0.000 | 0.008 | 0.218 | | 0.058 | 0.803 | |
| | | 12.875 | 0.008 | 0.310 | | 0.058 | 0.096 | |
| | | 12.875 | | | 1.121 | | | 0.095 |
| | 4 | 0.000 | | | -0.828 | | | -0.097 |
| | | 0.000 | -0.010 | -0.179 | | 0.056 | -0.831 | |
| | | 12.875 | -0.010 | -0.296 | | 0.056 | -0.098 | |
| | | 12.875 | | | -0.828 | | | -0.097 |

| | |
|---|---|
| JOB No | 66481-01 |
| Calcs | 737 thru |
| By | PCC |
| CKD | |



737

PROGRAM:SAP90/FILE:CM-A-04.F3F

WHC/MPF CAMERA ASSEMBLY MODEL JOB#: 66458-01 RUN: CM-A-04

F R A M E  E L E M E N T  F O R C E S

| ELT ID | LOAD COMB | DIST END I | 1-2 PLANE SHEAR | 1-2 PLANE MOMENT | AXIAL FORCE | 1-3 PLANE SHEAR | 1-3 PLANE MOMENT | AXIAL TORQ |
|---|---|---|---|---|---|---|---|---|
| | 4 | 0.000 | | | -0.605 | | | -0.086 |
| | | 0.000 | -0.030 | -0.108 | | -0.014 | -0.126 | |
| | | 13.893 | -0.030 | -0.528 | | -0.014 | -0.075 | |
| | | 13.893 | | | -0.605 | | | -0.086 |
| 232 | | | | | | | | |
| | 1 | 0.000 | | | 0.132 | | | -0.001 |
| | | 0.000 | 0.000 | 0.002 | | 0.000 | -0.002 | |
| | | 13.893 | 0.000 | 0.002 | | 0.000 | 0.000 | |
| | | 13.893 | | | 0.130 | | | -0.001 |
| | 2 | 0.000 | | | 0.680 | | | 0.091 |
| | | 0.000 | 0.015 | 0.137 | | 0.031 | 0.108 | |
| | | 13.893 | 0.015 | 0.079 | | 0.031 | 0.532 | |
| | | 13.893 | | | 0.678 | | | 0.091 |
| | 3 | 0.000 | | | 0.812 | | | 0.090 |
| | | 0.000 | 0.015 | 0.139 | | 0.031 | 0.107 | |
| | | 13.893 | 0.015 | 0.080 | | 0.031 | 0.532 | |
| | | 13.893 | | | 0.807 | | | 0.090 |
| | 4 | 0.000 | | | -0.548 | | | -0.091 |
| | | 0.000 | -0.015 | -0.136 | | -0.031 | -0.110 | |
| | | 13.893 | -0.015 | -0.077 | | -0.031 | -0.532 | |
| | | 13.893 | | | -0.548 | | | -0.091 |
| 233 | | | | | | | | |
| | 1 | 0.000 | | | 0.065 | | | -0.001 |
| | | 0.000 | 0.000 | 0.002 | | 0.000 | -0.002 | |
| | | 10.107 | 0.000 | 0.002 | | 0.000 | -0.002 | |
| | | 10.107 | | | 0.064 | | | -0.001 |
| | 2 | 0.000 | | | 0.629 | | | 0.105 |
| | | 0.000 | 0.017 | 0.229 | | 0.014 | 0.075 | |
| | | 10.107 | 0.017 | 0.067 | | 0.014 | 0.202 | |
| | | 10.107 | | | 0.627 | | | 0.105 |
| | 3 | 0.000 | | | 0.694 | | | 0.105 |
| | | 0.000 | 0.017 | 0.231 | | 0.014 | 0.072 | |
| | | 10.107 | 0.017 | 0.069 | | 0.014 | 0.200 | |
| | | 10.107 | | | 0.691 | | | 0.105 |
| | 4 | 0.000 | | | -0.563 | | | -0.106 |
| | | 0.000 | -0.017 | -0.227 | | -0.014 | -0.077 | |
| | | 10.107 | -0.017 | -0.066 | | -0.014 | -0.204 | |
| | | 10.107 | | | -0.563 | | | -0.106 |
| 234 | | | | | | | | |
| | 1 | 0.000 | | | 0.002 | | | -0.001 |
| | | 0.000 | 0.000 | 0.002 | | 0.000 | -0.002 | |



PAGE 23

PROGRAM:SAP90/FILE:CM-A-04.F3F

WHC/MPF CAMERA ASSEMBLY MODEL JOB#: 66458-01 RUN: CM-A-04

F R A M E  E L E M E N T  F O R C E S

| ELT ID | LOAD COMB | DIST END I | 1-2 PLANE SHEAR | 1-2 PLANE MOMENT | AXIAL FORCE | 1-3 PLANE SHEAR | 1-3 PLANE MOMENT | AXIAL TORQ |
|---|---|---|---|---|---|---|---|---|
| | | 10.107 | 0.000 | 0.002 | | 0.000 | -0.002 | |
| | | 10.107 | | | 0.000 | | | -0.001 |
| | 2 | 0.000 | | | 0.617 | | | 0.102 |
| | | 0.000 | 0.012 | 0.079 | | 0.016 | 0.224 | |
| | | 10.107 | 0.012 | 0.191 | | 0.016 | 0.077 | |
| | | 10.107 | | | 0.616 | | | 0.102 |
| | 3 | 0.000 | | | 0.620 | | | 0.102 |
| | | 0.000 | 0.012 | 0.081 | | 0.016 | 0.222 | |
| | | 10.107 | 0.012 | 0.193 | | 0.016 | 0.075 | |
| | | 10.107 | | | 0.616 | | | 0.102 |
| | 4 | 0.000 | | | -0.615 | | | -0.103 |
| | | 0.000 | -0.012 | -0.077 | | -0.016 | -0.226 | |
| | | 10.107 | -0.012 | -0.189 | | -0.016 | -0.078 | |
| | | 10.107 | | | -0.615 | | | -0.103 |
| 235 | | | | | | | | |
| | 1 | 0.000 | | | 0.066 | | | -0.001 |
| | | 0.000 | 0.000 | 0.002 | | 0.000 | -0.001 | |
| | | 10.107 | 0.000 | 0.001 | | 0.000 | -0.002 | |
| | | 10.107 | | | 0.064 | | | -0.001 |
| | 2 | 0.000 | | | 0.606 | | | 0.061 |
| | | 0.000 | 0.019 | 0.257 | | 0.013 | 0.084 | |
| | | 10.107 | 0.019 | 0.070 | | 0.013 | 0.197 | |
| | | 10.107 | | | 0.604 | | | 0.061 |
| | 3 | 0.000 | | | 0.672 | | | 0.061 |
| | | 0.000 | 0.019 | 0.258 | | 0.013 | 0.083 | |
| | | 10.107 | 0.019 | 0.071 | | 0.013 | 0.196 | |
| | | 10.107 | | | 0.668 | | | 0.061 |
| | 4 | 0.000 | | | -0.540 | | | -0.062 |
| | | 0.000 | -0.019 | -0.255 | | -0.013 | -0.086 | |
| | | 10.107 | -0.019 | -0.069 | | -0.013 | -0.199 | |
| | | 10.107 | | | -0.540 | | | -0.062 |
| 236 | | | | | | | | |
| | 1 | 0.000 | | | 0.129 | | | -0.001 |
| | | 0.000 | 0.000 | 0.001 | | 0.000 | -0.002 | |
| | | 10.107 | 0.000 | 0.001 | | 0.000 | -0.002 | |
| | | 10.107 | | | 0.127 | | | -0.001 |
| | 2 | 0.000 | | | 0.620 | | | 0.070 |
| | | 0.000 | 0.014 | 0.077 | | 0.019 | 0.257 | |
| | | 10.107 | 0.014 | 0.205 | | 0.019 | 0.072 | |
| | | 10.107 | | | 0.618 | | | 0.070 |
| | 3 | 0.000 | | | 0.748 | | | 0.070 |

WHC/MPF CAMERA ASSEMBLY MODEL JOB#: 66458-01 RUN: CM-A-04

F R A M E  E L E M E N T  F O R C E S

| ELT ID | LOAD COMB | DIST END I | 1-2 PLANE SHEAR | 1-2 PLANE MOMENT | AXIAL FORCE | 1-3 PLANE SHEAR | 1-3 PLANE MOMENT | AXIAL TORQ |
|---|---|---|---|---|---|---|---|---|
| | | 0.000 | 0.014 | 0.079 | | 0.019 | 0.255 | |
| | | 10.107 | 0.014 | 0.206 | | 0.019 | 0.070 | |
| | | 10.107 | | | 0.745 | | | 0.070 |
| | 4 | 0.000 | | | -0.491 | | | -0.071 |
| | | 0.000 | -0.014 | -0.076 | | -0.019 | -0.259 | |
| | | 10.107 | -0.014 | -0.204 | | -0.019 | -0.074 | |
| | | 10.107 | | | -0.491 | | | -0.071 |





73

PROGRAM:SAP90/FILE:CM-A-04.F3F

WHC/MPF CAMERA ASSEMBLY MODEL JOB#: 66458-01 RUN: CM-A-04

F R A M E  E L E M E N T  F O R C E S

| *ELT ID | LOAD COMB | DIST END1 | 1-2 PLANE SHEAR | 1-2 PLANE MOMENT | AXIAL FORCE | 1-3 PLANE SHEAR | 1-3 PLANE MOMENT | AXIAL TORQ |
|---|---|---|---|---|---|---|---|---|
| | | 16.892 | 0.000 | 0.002 | | 0.000 | -0.001 | |
| | | 16.892 | | | 0.038 | | | 0.000 |
| | 2 | 0.000 | | | 0.221 | | | 0.073 |
| | | 0.000 | 0.014 | 0.272 | | 0.021 | 0.309 | |
| | | 16.892 | 0.014 | 0.487 | | 0.021 | 0.667 | |
| | | 16.892 | | | 0.218 | | | 0.073 |
| | 3 | 0.000 | | | 0.262 | | | 0.073 |
| | | 0.000 | 0.014 | 0.273 | | 0.021 | 0.306 | |
| | | 16.892 | 0.014 | 0.489 | | 0.021 | 0.665 | |
| | | 16.892 | | | 0.256 | | | 0.073 |
| | 4 | 0.000 | | | -0.180 | | | -0.073 |
| | | 0.000 | -0.014 | -0.271 | | -0.021 | -0.311 | |
| | | 16.892 | -0.014 | -0.485 | | -0.021 | -0.668 | |
| | | 16.892 | | | -0.180 | | | -0.073 |
| 264 | ---------- | | | | | | | |
| | 1 | 0.000 | | | 0.106 | | | 0.000 |
| | | 0.000 | 0.000 | 0.002 | | 0.000 | -0.002 | |
| | | 16.892 | 0.000 | 0.002 | | 0.000 | -0.002 | |
| | | 16.892 | | | 0.103 | | | 0.000 |
| | 2 | 0.000 | | | 0.241 | | | 0.087 |
| | | 0.000 | 0.021 | 0.376 | | 0.009 | 0.286 | |
| | | 16.892 | 0.021 | 0.733 | | 0.009 | 0.433 | |
| | | 16.892 | | | 0.238 | | | 0.087 |
| | 3 | 0.000 | | | 0.347 | | | 0.086 |
| | | 0.000 | 0.021 | 0.378 | | 0.009 | 0.284 | |
| | | 16.892 | 0.021 | 0.735 | | 0.009 | 0.431 | |
| | | 16.892 | | | 0.341 | | | 0.086 |
| | 4 | 0.000 | | | -0.135 | | | -0.087 |
| | | 0.000 | -0.021 | -0.375 | | -0.009 | -0.288 | |
| | | 16.892 | -0.021 | -0.731 | | -0.009 | -0.435 | |
| | | 16.892 | | | -0.135 | | | -0.087 |
| 265 | ---------- | | | | | | | |
| | 1 | 0.000 | | | 0.038 | | | 0.000 |
| | | 0.000 | 0.000 | 0.001 | | 0.000 | -0.002 | |
| | | 2.250 | 0.000 | 0.001 | | 0.000 | -0.002 | |
| | | 2.250 | | | 0.037 | | | 0.000 |
| | 2 | 0.000 | | | 0.209 | | | 0.078 |
| | | 0.000 | 0.008 | 0.412 | | 0.023 | 0.719 | |
| | | 2.250 | 0.008 | 0.431 | | 0.023 | 0.770 | |
| | | 2.250 | | | 0.209 | | | 0.078 |
| | 3 | 0.000 | | | 0.247 | | | 0.079 |





PAGE 36

PROGRAM:SAP90/FILE:CM-A-04.F3F

WHC/MPF CAMERA ASSEMBLY MODEL JOB#: 66458-01 RUN: CM-A-04

F R A M E  E L E M E N T  F O R C E S

| ELT ID | LOAD COMB | DIST END1 | 1-2 PLANE SHEAR | 1-2 PLANE MOMENT | AXIAL FORCE | 1-3 PLANE SHEAR | 1-3 PLANE MOMENT | AXIAL TORQ |
|---|---|---|---|---|---|---|---|---|
| | | 0.000 | 0.008 | 0.413 | | 0.023 | 0.717 | |
| | | 2.250 | 0.008 | 0.432 | | 0.023 | 0.768 | |
| | | 2.250 | | | 0.246 | | | 0.079 |
| | 4 | 0.000 | | | -0.172 | | | -0.078 |
| | | 0.000 | -0.009 | -0.411 | | -0.023 | -0.721 | |
| | | 2.250 | -0.009 | -0.430 | | -0.023 | -0.772 | |
| | | 2.250 | | | -0.172 | | | -0.078 |
| 266 | ---------- | | | | | | | |
| | 1 | 0.000 | | | -0.024 | | | 0.000 |
| | | 0.000 | 0.000 | 0.001 | | 0.000 | -0.001 | |
| | | 2.250 | 0.000 | 0.001 | | 0.000 | -0.001 | |
| | | 2.250 | | | -0.025 | | | 0.000 |
| | 2 | 0.000 | | | 0.230 | | | 0.075 |
| | | 0.000 | 0.017 | 0.647 | | 0.040 | 0.359 | |
| | | 2.250 | 0.017 | 0.685 | | 0.040 | 0.448 | |
| | | 2.250 | | | 0.229 | | | 0.075 |
| | 3 | 0.000 | | | 0.206 | | | 0.075 |
| | | 0.000 | 0.017 | 0.649 | | 0.040 | 0.358 | |
| | | 2.250 | 0.017 | 0.687 | | 0.040 | 0.447 | |
| | | 2.250 | | | 0.205 | | | 0.075 |
| | 4 | 0.000 | | | -0.254 | | | -0.075 |
| | | 0.000 | -0.017 | -0.646 | | -0.040 | -0.360 | |
| | | 2.250 | -0.017 | -0.684 | | -0.040 | -0.449 | |
| | | 2.250 | | | -0.254 | | | -0.075 |
| 267 | ---------- | | | | | | | |
| | 1 | 0.000 | | | 0.038 | | | 0.000 |
| | | 0.000 | 0.000 | 0.001 | | 0.000 | -0.002 | |
| | | 2.250 | 0.000 | 0.002 | | 0.000 | -0.002 | |
| | | 2.250 | | | 0.037 | | | 0.000 |
| | 2 | 0.000 | | | 0.206 | | | 0.057 |
| | | 0.000 | 0.042 | 0.436 | | 0.013 | 0.616 | |
| | | 2.250 | 0.042 | 0.531 | | 0.013 | 0.588 | |
| | | 2.250 | | | 0.205 | | | 0.057 |
| | 3 | 0.000 | | | 0.243 | | | 0.058 |
| | | 0.000 | 0.043 | 0.438 | | 0.013 | 0.614 | |
| | | 2.250 | 0.043 | 0.533 | | 0.013 | 0.586 | |
| | | 2.250 | | | 0.242 | | | 0.058 |
| | 4 | 0.000 | | | -0.168 | | | -0.057 |
| | | 0.000 | -0.042 | -0.435 | | -0.013 | -0.618 | |
| | | 2.250 | -0.042 | -0.529 | | -0.013 | -0.590 | |
| | | 2.250 | | | -0.168 | | | -0.057 |

WHC/MPF CAMERA ASSEMBLY MODEL JOB#: 66458-01 RUN: CM-A-04

F R A M E  E L E M E N T  F O R C E S

| ELT ID | LOAD COMB | DIST END1 | 1-2 PLANE SHEAR | 1-2 PLANE MOMENT | AXIAL FORCE | 1-3 PLANE SHEAR | 1-3 PLANE MOMENT | AXIAL TORQ |
|---|---|---|---|---|---|---|---|---|
| 268 | | | | | | | | |
| | 1 | 0.000 | | | 0.103 | | | 0.000 |
| | | 0.000 | 0.000 | 0.003 | | 0.000 | -0.002 | |
| | | 2.250 | 0.000 | 0.002 | | 0.000 | -0.002 | |
| | | 2.250 | | | 0.102 | | | 0.000 |
| | 2 | 0.000 | | | 0.230 | | | 0.078 |
| | | 0.000 | 0.008 | 0.678 | | 0.009 | 0.434 | |
| | | 2.250 | 0.008 | 0.660 | | 0.009 | 0.454 | |
| | | 2.250 | | | 0.230 | | | 0.078 |
| | 3 | 0.000 | | | 0.333 | | | 0.078 |
| | | 0.000 | 0.008 | 0.681 | | 0.009 | 0.432 | |
| | | 2.250 | 0.008 | 0.662 | | 0.009 | 0.453 | |
| | | 2.250 | | | 0.332 | | | 0.078 |
| | 4 | 0.000 | | | -0.128 | | | -0.078 |
| | | 0.000 | -0.009 | -0.676 | | -0.009 | -0.436 | |
| | | 2.250 | -0.009 | -0.658 | | -0.009 | -0.456 | |
| | | 2.250 | | | -0.128 | | | -0.078 |

PAGE 53
PROGRAM:SAP90/FILE:CM-A-04.F3F
WHC/MPF CAMERA ASSEMBLY MODEL JOB#: 66458-01 RUN: CM-A-04

F R A M E  E L E M E N T  F O R C E S

| ELT ID | LOAD COMB | DIST END I | 1-2 PLANE SHEAR | 1-2 PLANE MOMENT | AXIAL FORCE | 1-3 PLANE SHEAR | 1-3 PLANE MOMENT | AXIAL TORQ |
|---|---|---|---|---|---|---|---|---|
| | | 0.941 | | | 0.027 | | | 0.158 |
| | 4 | 0.000 | | | -0.027 | | | -0.159 |
| | | 0.000 | -0.088 | -0.210 | | -0.034 | -0.033 | |
| | | 0.941 | -0.088 | -0.127 | | -0.034 | -0.004 | |
| | | 0.941 | | | -0.027 | | | -0.159 |
| 339 | | | | | | | | |
| | 1 | 0.000 | | | 0.000 | | | 0.000 |
| | | 0.000 | 0.000 | 0.000 | | 0.000 | 0.000 | |
| | | 0.941 | 0.000 | 0.000 | | 0.000 | 0.000 | |
| | | 0.941 | | | 0.000 | | | 0.000 |
| | 2 | 0.000 | | | 0.028 | | | 0.155 |
| | | 0.000 | 0.089 | 0.206 | | 0.035 | 0.032 | |
| | | 0.941 | 0.089 | 0.123 | | 0.035 | 0.003 | |
| | | 0.941 | | | 0.028 | | | 0.155 |
| | 3 | 0.000 | | | 0.028 | | | 0.155 |
| | | 0.000 | 0.089 | 0.205 | | 0.035 | 0.032 | |
| | | 0.941 | 0.089 | 0.122 | | 0.035 | 0.003 | |
| | | 0.941 | | | 0.028 | | | 0.155 |
| | 4 | 0.000 | | | -0.028 | | | -0.155 |
| | | 0.000 | -0.089 | -0.206 | | -0.035 | -0.032 | |
| | | 0.941 | -0.089 | -0.123 | | -0.035 | -0.003 | |
| | | 0.941 | | | -0.028 | | | -0.155 |
| 340 | | | | | | | | |
| | 1 | 0.000 | | | 0.000 | | | 0.000 |
| | | 0.000 | 0.000 | 0.000 | | 0.000 | 0.000 | |
| | | 0.941 | 0.000 | 0.000 | | 0.000 | 0.000 | |
| | | 0.941 | | | 0.000 | | | 0.000 |
| | 2 | 0.000 | | | 0.031 | | | 0.175 |
| | | 0.000 | 0.101 | 0.234 | | 0.040 | 0.038 | |
| | | 0.941 | 0.101 | 0.139 | | 0.040 | 0.003 | |
| | | 0.941 | | | 0.031 | | | 0.175 |
| | 3 | 0.000 | | | 0.031 | | | 0.174 |
| | | 0.000 | 0.101 | 0.233 | | 0.040 | 0.038 | |
| | | 0.941 | 0.101 | 0.139 | | 0.040 | 0.003 | |
| | | 0.941 | | | 0.031 | | | 0.174 |
| | 4 | 0.000 | | | -0.031 | | | -0.175 |
| | | 0.000 | -0.100 | -0.234 | | -0.039 | -0.038 | |
| | | 0.941 | -0.100 | -0.140 | | -0.039 | -0.003 | |
| | | 0.941 | | | -0.031 | | | -0.175 |
| 401 | | | | | | | | |
| | 1 | 0.000 | | | 0.001 | | | 0.000 |



PAGE 54
PROGRAM:SAP90/FILE:CM-A-04.F3F
WHC/MPF CAMERA ASSEMBLY MODEL JOB#: 66458-01 RUN: CM-A-04

F R A M E  E L E M E N T  F O R C E S

| ELT ID | LOAD COMB | DIST END I | 1-2 PLANE SHEAR | 1-2 PLANE MOMENT | AXIAL FORCE | 1-3 PLANE SHEAR | 1-3 PLANE MOMENT | AXIAL TORQ |
|---|---|---|---|---|---|---|---|---|
| | | 0.000 | 0.000 | 0.001 | | 0.000 | 0.000 | |
| | | 9.454 | 0.000 | 0.000 | | 0.000 | 0.000 | |
| | | 14.096 | 0.000 | 0.000 | | 0.000 | 0.000 | |
| | | 14.096 | | | 0.002 | | | 0.000 |
| | 2 | 0.000 | | | 0.089 | | | 0.001 |
| | | 0.000 | 0.029 | 0.210 | | 0.001 | 0.004 | |
| | | 14.096 | 0.030 | 0.211 | | 0.001 | 0.006 | |
| | | 14.096 | | | 0.089 | | | 0.001 |
| | 3 | 0.000 | | | 0.090 | | | 0.001 |
| | | 0.000 | 0.029 | 0.211 | | 0.001 | 0.004 | |
| | | 14.096 | 0.030 | 0.211 | | 0.001 | 0.006 | |
| | | 14.096 | | | 0.091 | | | 0.001 |
| | 4 | 0.000 | | | -0.088 | | | -0.001 |
| | | 0.000 | -0.030 | -0.208 | | -0.001 | -0.004 | |
| | | 14.096 | -0.030 | -0.211 | | -0.001 | -0.006 | |
| | | 14.096 | | | -0.088 | | | -0.001 |
| 402 | | | | | | | | |
| | 1 | 0.000 | | | 0.001 | | | 0.000 |
| | | 0.000 | 0.000 | 0.001 | | 0.000 | 0.000 | |
| | | 8.971 | 0.000 | 0.000 | | 0.000 | 0.000 | |
| | | 14.096 | 0.000 | 0.000 | | 0.000 | 0.000 | |
| | | 14.096 | | | 0.001 | | | 0.000 |
| | 2 | 0.000 | | | 0.078 | | | 0.001 |
| | | 0.000 | 0.026 | 0.186 | | 0.001 | 0.005 | |
| | | 14.096 | 0.027 | 0.186 | | 0.001 | 0.006 | |
| | | 14.096 | | | 0.079 | | | 0.001 |
| | 3 | 0.000 | | | 0.079 | | | 0.001 |
| | | 0.000 | 0.026 | 0.187 | | 0.001 | 0.005 | |
| | | 14.096 | 0.027 | 0.186 | | 0.001 | 0.006 | |
| | | 14.096 | | | 0.080 | | | 0.001 |
| | 4 | 0.000 | | | -0.078 | | | -0.001 |
| | | 0.000 | -0.026 | -0.185 | | -0.001 | -0.005 | |
| | | 14.096 | -0.026 | -0.186 | | -0.001 | -0.006 | |
| | | 14.096 | | | -0.078 | | | -0.001 |
| 403 | | | | | | | | |
| | 1 | 0.000 | | | 0.001 | | | 0.000 |
| | | 0.000 | 0.000 | 0.001 | | 0.000 | 0.000 | |
| | | 6.374 | 0.000 | 0.000 | | 0.000 | 0.000 | |
| | | 14.096 | 0.000 | 0.001 | | 0.000 | 0.000 | |
| | | 14.096 | | | 0.002 | | | 0.000 |
| | 2 | 0.000 | | | 0.080 | | | 0.001 |
| | | 0.000 | 0.026 | 0.188 | | 0.001 | 0.003 | |

WHC/MPF CAMERA ASSEMBLY MODEL JOB#: 66458-01 RUN: CM-A-04

F R A M E  E L E M E N T  F O R C E S

| ELT ID | LOAD COMB | DIST END I | 1-2 PLANE SHEAR | 1-2 PLANE MOMENT | AXIAL FORCE | 1-3 PLANE SHEAR | 1-3 PLANE MOMENT | AXIAL TORQ |
|---|---|---|---|---|---|---|---|---|
| | | 14.096 | 0.027 | 0.188 | | 0.001 | 0.005 | |
| | | 14.096 | | | 0.080 | | | 0.001 |
| | 3 | 0.000 | | | 0.081 | | | 0.001 |
| | | 0.000 | 0.026 | 0.188 | | 0.001 | 0.003 | |
| | | 14.096 | 0.027 | 0.189 | | 0.001 | 0.005 | |
| | | 14.096 | | | 0.082 | | | 0.001 |
| | 4 | 0.000 | | | -0.079 | | | -0.001 |
| | | 0.000 | -0.027 | -0.187 | | -0.001 | -0.003 | |
| | | 14.096 | -0.027 | -0.187 | | -0.001 | -0.005 | |
| | | 14.096 | | | -0.079 | | | -0.001 |
| 404 | | | | | | | | |
| | 1 | 0.000 | | | 0.001 | | | 0.000 |
| | | 0.000 | 0.000 | 0.001 | | 0.000 | 0.000 | |
| | | 6.959 | 0.000 | 0.000 | | 0.000 | 0.000 | |
| | | 14.096 | 0.000 | 0.001 | | 0.000 | 0.000 | |
| | | 14.096 | | | 0.002 | | | 0.000 |
| | 2 | 0.000 | | | 0.090 | | | 0.001 |
| | | 0.000 | 0.030 | 0.211 | | 0.001 | 0.003 | |
| | | 14.096 | 0.030 | 0.212 | | 0.001 | 0.005 | |
| | | 14.096 | | | 0.090 | | | 0.001 |
| | 3 | 0.000 | | | 0.091 | | | 0.001 |
| | | 0.000 | 0.029 | 0.211 | | 0.001 | 0.003 | |
| | | 14.096 | 0.030 | 0.213 | | 0.001 | 0.005 | |
| | | 14.096 | | | 0.092 | | | 0.001 |
| | 4 | 0.000 | | | -0.088 | | | -0.001 |
| | | 0.000 | -0.030 | -0.210 | | -0.001 | -0.003 | |
| | | 14.096 | -0.030 | -0.211 | | -0.001 | -0.005 | |
| | | 14.096 | | | -0.088 | | | -0.001 |
| 405 | | | | | | | | |
| | 1 | 0.000 | | | 0.000 | | | 0.000 |
| | | 0.000 | 0.000 | 0.000 | | 0.000 | 0.000 | |
| | | 5.529 | 0.000 | 0.000 | | 0.000 | 0.000 | |
| | | 14.096 | 0.000 | -0.001 | | 0.000 | 0.000 | |
| | | 14.096 | | | 0.000 | | | 0.000 |
| | 2 | 0.000 | | | 0.042 | | | 0.001 |
| | | 0.000 | 0.047 | 0.334 | | 0.001 | 0.008 | |
| | | 14.096 | 0.047 | 0.327 | | 0.001 | 0.008 | |
| | | 14.096 | | | 0.043 | | | 0.001 |
| | 3 | 0.000 | | | 0.042 | | | 0.001 |
| | | 0.000 | 0.047 | 0.334 | | 0.001 | 0.007 | |
| | | 14.096 | 0.046 | 0.326 | | 0.001 | 0.008 | |
| | | 14.096 | | | 0.043 | | | 0.001 |





WHC/MPF CAMERA ASSEMBLY MODEL JOB#: 66458-01 RUN: CM-A-04

F R A M E  E L E M E N T  F O R C E S

| ELT ID | LOAD COMB | DIST END I | 1-2 PLANE SHEAR | 1-2 PLANE MOMENT | AXIAL FORCE | 1-3 PLANE SHEAR | 1-3 PLANE MOMENT | AXIAL TORQ |
|---|---|---|---|---|---|---|---|---|
| | 4 | 0.000 | | | -0.042 | | | -0.001 |
| | | 0.000 | -0.047 | -0.334 | | -0.001 | -0.008 | |
| | | 14.096 | -0.047 | -0.328 | | -0.001 | -0.008 | |
| | | 14.096 | | | -0.042 | | | -0.001 |
| 406 | | | | | | | | |
| | 1 | 0.000 | | | 0.000 | | | 0.000 |
| | | 0.000 | 0.000 | 0.000 | | 0.000 | 0.000 | |
| | | 5.357 | 0.000 | 0.000 | | 0.000 | 0.000 | |
| | | 14.096 | 0.000 | -0.001 | | 0.000 | 0.000 | |
| | | 14.096 | | | 0.000 | | | 0.000 |
| | 2 | 0.000 | | | 0.038 | | | 0.001 |
| | | 0.000 | 0.042 | 0.296 | | 0.001 | 0.008 | |
| | | 14.096 | 0.041 | 0.290 | | 0.001 | 0.008 | |
| | | 14.096 | | | 0.038 | | | 0.001 |
| | 3 | 0.000 | | | 0.037 | | | 0.001 |
| | | 0.000 | 0.042 | 0.296 | | 0.001 | 0.008 | |
| | | 14.096 | 0.041 | 0.289 | | 0.001 | 0.008 | |
| | | 14.096 | | | 0.038 | | | 0.001 |
| | 4 | 0.000 | | | -0.038 | | | -0.001 |
| | | 0.000 | -0.042 | -0.296 | | -0.001 | -0.008 | |
| | | 14.096 | -0.042 | -0.291 | | -0.001 | -0.008 | |
| | | 14.096 | | | -0.038 | | | -0.001 |
| 407 | | | | | | | | |
| | 1 | 0.000 | | | 0.000 | | | 0.000 |
| | | 0.000 | 0.000 | 0.000 | | 0.000 | 0.000 | |
| | | 4.102 | 0.000 | 0.000 | | 0.000 | 0.000 | |
| | | 14.096 | 0.000 | -0.001 | | 0.000 | 0.000 | |
| | | 14.096 | | | 0.000 | | | 0.000 |
| | 2 | 0.000 | | | 0.037 | | | 0.001 |
| | | 0.000 | 0.042 | 0.298 | | 0.001 | 0.007 | |
| | | 14.096 | 0.042 | 0.291 | | 0.001 | 0.008 | |
| | | 14.096 | | | 0.038 | | | 0.001 |
| | 3 | 0.000 | | | 0.037 | | | 0.001 |
| | | 0.000 | 0.042 | 0.298 | | 0.001 | 0.007 | |
| | | 14.096 | 0.041 | 0.290 | | 0.001 | 0.008 | |
| | | 14.096 | | | 0.038 | | | 0.001 |
| | 4 | 0.000 | | | -0.038 | | | -0.001 |
| | | 0.000 | -0.042 | -0.298 | | -0.001 | -0.007 | |
| | | 14.096 | -0.042 | -0.292 | | -0.001 | -0.008 | |
| | | 14.096 | | | -0.038 | | | -0.001 |

F R A M E  E L E M E N T  F O R C E S

| ELT ID | LOAD COMB | DIST END I | 1-2 PLANE SHEAR | 1-2 PLANE MOMENT | AXIAL FORCE | 1-3 PLANE SHEAR | 1-3 PLANE MOMENT | AXIAL TORQ |
|---|---|---|---|---|---|---|---|---|
| 408 | | | | | | | | |
| | 1 | 0.000 | | | 0.000 | | | 0.000 |
| | | 0.000 | 0.000 | 0.000 | | 0.000 | 0.000 | |
| | | 4.421 | 0.000 | 0.000 | | 0.000 | 0.000 | |
| | | 14.096 | 0.000 | -0.001 | | 0.000 | 0.000 | |
| | | 14.096 | | | 0.000 | | | 0.000 |
| | 2 | 0.000 | | | 0.042 | | | 0.001 |
| | | 0.000 | 0.047 | 0.335 | | 0.001 | 0.006 | |
| | | 14.096 | 0.047 | 0.328 | | 0.001 | 0.008 | |
| | | 14.096 | | | 0.042 | | | 0.001 |
| | 3 | 0.000 | | | 0.041 | | | 0.001 |
| | | 0.000 | 0.047 | 0.335 | | 0.001 | 0.006 | |
| | | 14.096 | 0.046 | 0.327 | | 0.001 | 0.008 | |
| | | 14.096 | | | 0.042 | | | 0.001 |
| | 4 | 0.000 | | | -0.042 | | | -0.001 |
| | | 0.000 | -0.047 | -0.335 | | -0.001 | -0.007 | |
| | | 14.096 | -0.047 | -0.329 | | -0.001 | -0.008 | |
| | | 14.096 | | | -0.042 | | | -0.001 |
| 409 | | | | | | | | |
| | 1 | 0.000 | | | 0.000 | | | 0.000 |
| | | 0.000 | 0.000 | 0.000 | | 0.000 | 0.000 | |
| | | 3.896 | 0.000 | 0.001 | | 0.000 | 0.000 | |
| | | 14.096 | 0.000 | -0.001 | | 0.000 | 0.000 | |
| | | 14.096 | | | 0.000 | | | 0.000 |
| | 2 | 0.000 | | | 0.040 | | | 0.000 |
| | | 0.000 | 0.050 | 0.349 | | 0.001 | 0.008 | |
| | | 14.096 | 0.049 | 0.351 | | 0.001 | 0.007 | |
| | | 14.096 | | | 0.040 | | | 0.000 |
| | 3 | 0.000 | | | 0.039 | | | 0.000 |
| | | 0.000 | 0.050 | 0.349 | | 0.001 | 0.008 | |
| | | 14.096 | 0.049 | 0.349 | | 0.001 | 0.007 | |
| | | 14.096 | | | 0.041 | | | 0.000 |
| | 4 | 0.000 | | | -0.040 | | | 0.000 |
| | | 0.000 | -0.050 | -0.348 | | -0.001 | -0.008 | |
| | | 14.096 | -0.050 | -0.352 | | -0.001 | -0.007 | |
| | | 14.096 | | | -0.040 | | | 0.000 |
| 410 | | | | | | | | |
| | 1 | 0.000 | | | 0.000 | | | 0.000 |
| | | 0.000 | 0.000 | 0.000 | | 0.000 | 0.000 | |
| | | 4.115 | 0.000 | 0.001 | | 0.000 | 0.000 | |
| | | 14.096 | 0.000 | -0.001 | | 0.000 | 0.000 | |
| | | 14.096 | | | 0.000 | | | 0.000 |





F R A M E  E L E M E N T  F O R C E S

| ELT ID | LOAD COMB | DIST END I | 1-2 PLANE SHEAR | 1-2 PLANE MOMENT | AXIAL FORCE | 1-3 PLANE SHEAR | 1-3 PLANE MOMENT | AXIAL TORQ |
|---|---|---|---|---|---|---|---|---|
| | 2 | 0.000 | | | 0.036 | | | 0.000 |
| | | 0.000 | 0.044 | 0.309 | | 0.001 | 0.008 | |
| | | 14.096 | 0.044 | 0.310 | | 0.001 | 0.008 | |
| | | 14.096 | | | 0.036 | | | 0.000 |
| | 3 | 0.000 | | | 0.035 | | | 0.000 |
| | | 0.000 | 0.044 | 0.309 | | 0.001 | 0.008 | |
| | | 14.096 | 0.043 | 0.309 | | 0.001 | 0.008 | |
| | | 14.096 | | | 0.036 | | | 0.000 |
| | 4 | 0.000 | | | -0.036 | | | 0.000 |
| | | 0.000 | -0.044 | -0.309 | | -0.001 | -0.008 | |
| | | 14.096 | -0.044 | -0.312 | | -0.001 | -0.007 | |
| | | 14.096 | | | -0.036 | | | 0.000 |
| 411 | | | | | | | | |
| | 1 | 0.000 | | | 0.000 | | | 0.000 |
| | | 0.000 | 0.000 | 0.000 | | 0.000 | 0.000 | |
| | | 3.630 | 0.000 | 0.000 | | 0.000 | 0.000 | |
| | | 14.096 | 0.000 | -0.002 | | 0.000 | 0.000 | |
| | | 14.096 | | | 0.000 | | | 0.000 |
| | 2 | 0.000 | | | 0.036 | | | 0.000 |
| | | 0.000 | 0.044 | 0.310 | | 0.001 | 0.008 | |
| | | 14.096 | 0.044 | 0.311 | | 0.001 | 0.008 | |
| | | 14.096 | | | 0.037 | | | 0.000 |
| | 3 | 0.000 | | | 0.036 | | | 0.000 |
| | | 0.000 | 0.044 | 0.310 | | 0.001 | 0.008 | |
| | | 14.096 | 0.043 | 0.309 | | 0.001 | 0.008 | |
| | | 14.096 | | | 0.037 | | | 0.000 |
| | 4 | 0.000 | | | -0.037 | | | 0.000 |
| | | 0.000 | -0.044 | -0.310 | | -0.001 | -0.008 | |
| | | 14.096 | -0.044 | -0.312 | | -0.001 | -0.008 | |
| | | 14.096 | | | -0.037 | | | 0.000 |
| 412 | | | | | | | | |
| | 1 | 0.000 | | | 0.000 | | | 0.000 |
| | | 0.000 | 0.000 | 0.000 | | 0.000 | 0.000 | |
| | | 3.604 | 0.000 | 0.000 | | 0.000 | 0.000 | |
| | | 14.096 | 0.000 | -0.002 | | 0.000 | 0.000 | |
| | | 14.096 | | | 0.000 | | | 0.000 |
| | 2 | 0.000 | | | 0.040 | | | 0.000 |
| | | 0.000 | 0.050 | 0.349 | | 0.001 | 0.008 | |
| | | 14.096 | 0.049 | 0.351 | | 0.001 | 0.008 | |
| | | 14.096 | | | 0.041 | | | 0.000 |
| | 3 | 0.000 | | | 0.040 | | | 0.000 |

WHC/MPF CAMERA ASSEMBLY MODEL JOB#: 66458-01 RUN: CM-A-04

F R A M E  E L E M E N T  F O R C E S

| ELT ID | LOAD COMB | DIST END I | 1-2 PLANE SHEAR | 1-2 PLANE MOMENT | AXIAL FORCE | 1-3 PLANE SHEAR | 1-3 PLANE MOMENT | AXIAL TORQ |
|---|---|---|---|---|---|---|---|---|
| | | 0.000 | 0.050 | 0.350 | | 0.001 | 0.008 | |
| | | 14.096 | 0.049 | 0.350 | | 0.001 | 0.008 | |
| | | 14.096 | | | 0.041 | | | 0.000 |
| | 4 | 0.000 | | | -0.040 | | | 0.000 |
| | | 0.000 | -0.050 | -0.349 | | -0.001 | -0.008 | |
| | | 14.096 | -0.050 | -0.353 | | -0.001 | -0.008 | |
| | | 14.096 | | | -0.040 | | | 0.000 |
| 413 | | | | | | | | |
| | 1 | 0.000 | | | 0.000 | | | 0.000 |
| | | 0.000 | 0.000 | 0.000 | | 0.000 | 0.000 | |
| | | 4.156 | 0.000 | 0.001 | | 0.000 | 0.000 | |
| | | 14.096 | 0.000 | -0.001 | | 0.000 | 0.000 | |
| | | 14.096 | | | 0.001 | | | 0.000 |
| | 2 | 0.000 | | | 0.105 | | | 0.001 |
| | | 0.000 | 0.033 | 0.249 | | 0.001 | 0.005 | |
| | | 14.096 | 0.033 | 0.216 | | 0.001 | 0.003 | |
| | | 14.096 | | | 0.105 | | | 0.001 |
| | 3 | 0.000 | | | 0.105 | | | 0.001 |
| | | 0.000 | 0.033 | 0.249 | | 0.001 | 0.005 | |
| | | 14.096 | 0.032 | 0.215 | | 0.001 | 0.003 | |
| | | 14.096 | | | 0.106 | | | 0.001 |
| | 4 | 0.000 | | | -0.105 | | | -0.001 |
| | | 0.000 | -0.033 | -0.248 | | -0.001 | -0.005 | |
| | | 14.096 | -0.033 | -0.217 | | -0.001 | -0.003 | |
| | | 14.096 | | | -0.105 | | | -0.001 |
| 414 | | | | | | | | |
| | 1 | 0.000 | | | 0.000 | | | 0.000 |
| | | 0.000 | 0.000 | 0.000 | | 0.000 | 0.000 | |
| | | 4.875 | 0.000 | 0.001 | | 0.000 | 0.000 | |
| | | 14.096 | 0.000 | -0.001 | | 0.000 | 0.000 | |
| | | 14.096 | | | 0.000 | | | 0.000 |
| | 2 | 0.000 | | | 0.092 | | | 0.001 |
| | | 0.000 | 0.029 | 0.218 | | 0.001 | 0.006 | |
| | | 14.096 | 0.029 | 0.190 | | 0.001 | 0.004 | |
| | | 14.096 | | | 0.092 | | | 0.001 |
| | 3 | 0.000 | | | 0.092 | | | 0.001 |
| | | 0.000 | 0.029 | 0.218 | | 0.001 | 0.006 | |
| | | 14.096 | 0.028 | 0.189 | | 0.001 | 0.004 | |
| | | 14.096 | | | 0.093 | | | 0.001 |
| | 4 | 0.000 | | | -0.092 | | | -0.001 |
| | | 0.000 | -0.029 | -0.218 | | -0.001 | -0.006 | |
| | | 14.096 | -0.029 | -0.191 | | -0.001 | -0.004 | |





WHC/MPF CAMERA ASSEMBLY MODEL JOB#: 66458-01 RUN: CM-A-04

F R A M E  E L E M E N T  F O R C E S

| ELT ID | LOAD COMB | DIST END I | 1-2 PLANE SHEAR | 1-2 PLANE MOMENT | AXIAL FORCE | 1-3 PLANE SHEAR | 1-3 PLANE MOMENT | AXIAL TORQ |
|---|---|---|---|---|---|---|---|---|
| | | 14.096 | | | -0.092 | | | -0.001 |
| 415 | | | | | | | | |
| | 1 | 0.000 | | | 0.000 | | | 0.000 |
| | | 0.000 | 0.000 | 0.000 | | 0.000 | 0.000 | |
| | | 4.662 | 0.000 | 0.000 | | 0.000 | 0.000 | |
| | | 14.096 | 0.000 | -0.001 | | 0.000 | 0.000 | |
| | | 14.096 | | | 0.001 | | | 0.000 |
| | 2 | 0.000 | | | 0.090 | | | 0.001 |
| | | 0.000 | 0.029 | 0.217 | | 0.001 | 0.006 | |
| | | 14.096 | 0.029 | 0.189 | | 0.001 | 0.005 | |
| | | 14.096 | | | 0.090 | | | 0.001 |
| | 3 | 0.000 | | | 0.090 | | | 0.001 |
| | | 0.000 | 0.029 | 0.217 | | 0.001 | 0.006 | |
| | | 14.096 | 0.028 | 0.188 | | 0.001 | 0.005 | |
| | | 14.096 | | | 0.091 | | | 0.001 |
| | 4 | 0.000 | | | -0.090 | | | -0.001 |
| | | 0.000 | -0.029 | -0.217 | | -0.001 | -0.006 | |
| | | 14.096 | -0.029 | -0.190 | | -0.001 | -0.005 | |
| | | 14.096 | | | -0.090 | | | -0.001 |
| 416 | | | | | | | | |
| | 1 | 0.000 | | | 0.000 | | | 0.000 |
| | | 0.000 | 0.000 | 0.000 | | 0.000 | 0.000 | |
| | | 4.171 | 0.000 | 0.000 | | 0.000 | 0.000 | |
| | | 14.096 | 0.000 | -0.001 | | 0.000 | 0.000 | |
| | | 14.096 | | | 0.001 | | | 0.000 |
| | 2 | 0.000 | | | 0.104 | | | 0.001 |
| | | 0.000 | 0.033 | 0.248 | | 0.001 | 0.005 | |
| | | 14.096 | 0.033 | 0.215 | | 0.001 | 0.004 | |
| | | 14.096 | | | 0.105 | | | 0.001 |
| | 3 | 0.000 | | | 0.104 | | | 0.001 |
| | | 0.000 | 0.033 | 0.248 | | 0.001 | 0.005 | |
| | | 14.096 | 0.032 | 0.214 | | 0.001 | 0.004 | |
| | | 14.096 | | | 0.105 | | | 0.001 |
| | 4 | 0.000 | | | -0.104 | | | -0.001 |
| | | 0.000 | -0.033 | -0.248 | | -0.001 | -0.005 | |
| | | 14.096 | -0.033 | -0.217 | | -0.001 | -0.004 | |
| | | 14.096 | | | -0.104 | | | -0.001 |
| 417 | | | | | | | | |
| | 1 | 0.000 | | | 0.000 | | | 0.000 |
| | | 0.000 | 0.000 | 0.000 | | 0.000 | 0.000 | |
| | | 4.950 | 0.000 | 0.000 | | 0.000 | 0.000 | |
| | | 14.096 | 0.000 | -0.001 | | 0.000 | 0.000 | |

PAGE 61
PROGRAM:SAP90/FILE:CM-A-04.F3F
WHC/MPF CAMERA ASSEMBLY MODEL JOB#: 66458-01 RUN: CM-A-04

F R A M E  E L E M E N T  F O R C E S

| ELT ID | LOAD COMB | DIST END I | 1-2 PLANE SHEAR | 1-2 PLANE MOMENT | AXIAL FORCE | 1-3 PLANE SHEAR | 1-3 PLANE MOMENT | AXIAL TORQ |
|---|---|---|---|---|---|---|---|---|
| | | 14.096 | | | 0.001 | | | 0.000 |
| | 2 | 0.000 | | | 0.114 | | | 0.001 |
| | | 0.000 | 0.034 | 0.224 | | 0.001 | 0.005 | |
| | | 14.096 | 0.033 | 0.251 | | 0.001 | 0.007 | |
| | | 14.096 | | | 0.115 | | | 0.001 |
| | 3 | 0.000 | | | 0.115 | | | 0.001 |
| | | 0.000 | 0.034 | 0.224 | | 0.001 | 0.005 | |
| | | 14.096 | 0.033 | 0.250 | | 0.001 | 0.007 | |
| | | 14.096 | | | 0.116 | | | 0.001 |
| | 4 | 0.000 | | | -0.114 | | | -0.001 |
| | | 0.000 | -0.034 | -0.224 | | -0.001 | -0.005 | |
| | | 14.096 | -0.034 | -0.252 | | -0.001 | -0.007 | |
| | | 14.096 | | | -0.114 | | | -0.001 |
| 418 | | | | | | | | |
| | 1 | 0.000 | | | 0.000 | | | 0.000 |
| | | 0.000 | 0.000 | 0.000 | | 0.000 | 0.000 | |
| | | 6.640 | 0.000 | 0.000 | | 0.000 | 0.000 | |
| | | 14.096 | 0.000 | -0.001 | | 0.000 | 0.000 | |
| | | 14.096 | | | 0.000 | | | 0.000 |
| | 2 | 0.000 | | | 0.093 | | | 0.001 |
| | | 0.000 | 0.031 | 0.203 | | 0.001 | 0.004 | |
| | | 14.096 | 0.030 | 0.227 | | 0.001 | 0.006 | |
| | | 14.096 | | | 0.094 | | | 0.001 |
| | 3 | 0.000 | | | 0.093 | | | 0.001 |
| | | 0.000 | 0.031 | 0.202 | | 0.001 | 0.004 | |
| | | 14.096 | 0.030 | 0.227 | | 0.001 | 0.006 | |
| | | 14.096 | | | 0.094 | | | 0.001 |
| | 4 | 0.000 | | | -0.093 | | | -0.001 |
| | | 0.000 | -0.031 | -0.203 | | -0.001 | -0.004 | |
| | | 14.096 | -0.031 | -0.228 | | -0.001 | -0.006 | |
| | | 14.096 | | | -0.093 | | | -0.001 |
| 419 | | | | | | | | |
| | 1 | 0.000 | | | 0.000 | | | 0.000 |
| | | 0.000 | 0.000 | 0.000 | | 0.000 | 0.000 | |
| | | 6.053 | 0.000 | 0.000 | | 0.000 | 0.000 | |
| | | 14.096 | 0.000 | -0.001 | | 0.000 | 0.000 | |
| | | 14.096 | | | 0.000 | | | 0.000 |
| | 2 | 0.000 | | | 0.094 | | | 0.001 |
| | | 0.000 | 0.030 | 0.198 | | 0.001 | 0.004 | |
| | | 14.096 | 0.029 | 0.221 | | 0.001 | 0.006 | |
| | | 14.096 | | | 0.095 | | | 0.001 |



PAGE 62
PROGRAM:SAP90/FILE:CM-A-04.F3F
WHC/MPF CAMERA ASSEMBLY MODEL JOB#: 66458-01 RUN: CM-A-04

F R A M E  E L E M E N T  F O R C E S

| ELT ID | LOAD COMB | DIST END I | 1-2 PLANE SHEAR | 1-2 PLANE MOMENT | AXIAL FORCE | 1-3 PLANE SHEAR | 1-3 PLANE MOMENT | AXIAL TORQ |
|---|---|---|---|---|---|---|---|---|
| | 3 | 0.000 | | | 0.094 | | | 0.001 |
| | | 0.000 | 0.030 | 0.197 | | 0.001 | 0.004 | |
| | | 14.096 | 0.029 | 0.220 | | 0.001 | 0.006 | |
| | | 14.096 | | | 0.096 | | | 0.001 |
| | 4 | 0.000 | | | -0.095 | | | -0.001 |
| | | 0.000 | -0.030 | -0.198 | | -0.001 | -0.004 | |
| | | 14.096 | -0.030 | -0.222 | | -0.001 | -0.006 | |
| | | 14.096 | | | -0.095 | | | -0.001 |
| 420 | | | | | | | | |
| | 1 | 0.000 | | | 0.000 | | | 0.000 |
| | | 0.000 | 0.000 | 0.000 | | 0.000 | 0.000 | |
| | | 5.455 | 0.000 | 0.000 | | 0.000 | 0.000 | |
| | | 14.096 | 0.000 | -0.001 | | 0.000 | 0.000 | |
| | | 14.096 | | | 0.001 | | | 0.000 |
| | 2 | 0.000 | | | 0.107 | | | 0.001 |
| | | 0.000 | 0.034 | 0.223 | | 0.001 | 0.004 | |
| | | 14.096 | 0.033 | 0.251 | | 0.001 | 0.006 | |
| | | 14.096 | | | 0.107 | | | 0.001 |
| | 3 | 0.000 | | | 0.107 | | | 0.001 |
| | | 0.000 | 0.034 | 0.223 | | 0.001 | 0.004 | |
| | | 14.096 | 0.033 | 0.250 | | 0.001 | 0.006 | |
| | | 14.096 | | | 0.108 | | | 0.001 |
| | 4 | 0.000 | | | -0.107 | | | -0.001 |
| | | 0.000 | -0.034 | -0.224 | | -0.001 | -0.004 | |
| | | 14.096 | -0.034 | -0.253 | | -0.001 | -0.006 | |
| | | 14.096 | | | -0.107 | | | -0.001 |

PAGE 62
PROGRAM:SAP90/FILE:CM-A-04.F3F
WHC/MPF CAMERA ASSEMBLY MODEL JOB#: 66458-01 RUN: CM-A-04

F R A M E  E L E M E N T  F O R C E S

| ELT ID | LOAD COMB | DIST END1 | 1-2 PLANE SHEAR | 1-2 PLANE MOMENT | AXIAL FORCE | 1-3 PLANE SHEAR | 1-3 PLANE MOMENT | AXIAL TORQ |
|---|---|---|---|---|---|---|---|---|
| | 3 | 0.000 | | | 0.094 | | | 0.001 |
| | | 0.000 | 0.030 | 0.197 | | 0.001 | 0.004 | |
| | | 14.096 | 0.029 | 0.220 | | 0.001 | 0.006 | |
| | | 14.096 | | | 0.096 | | | 0.001 |
| | 4 | 0.000 | | | -0.095 | | | -0.001 |
| | | 0.000 | -0.030 | -0.198 | | -0.001 | -0.004 | |
| | | 14.096 | -0.030 | -0.222 | | -0.001 | -0.006 | |
| | | 14.096 | | | -0.095 | | | -0.001 |
| 420 | | | | | | | | |
| | 1 | 0.000 | | | 0.000 | | | 0.000 |
| | | 0.000 | 0.000 | 0.000 | | 0.000 | 0.000 | |
| | | 5.455 | 0.000 | 0.000 | | 0.000 | 0.000 | |
| | | 14.096 | 0.000 | -0.001 | | 0.000 | 0.000 | |
| | | 14.096 | | | 0.001 | | | 0.000 |
| | 2 | 0.000 | | | 0.107 | | | 0.001 |
| | | 0.000 | 0.034 | 0.223 | | 0.001 | 0.004 | |
| | | 14.096 | 0.033 | 0.251 | | 0.001 | 0.006 | |
| | | 14.096 | | | 0.107 | | | 0.001 |
| | 3 | 0.000 | | | 0.107 | | | 0.001 |
| | | 0.000 | 0.034 | 0.223 | | 0.001 | 0.004 | |
| | | 14.096 | 0.033 | 0.250 | | 0.001 | 0.006 | |
| | | 14.096 | | | 0.108 | | | 0.001 |
| | 4 | 0.000 | | | -0.107 | | | -0.001 |
| | | 0.000 | -0.034 | -0.224 | | -0.001 | -0.004 | |
| | | 14.096 | -0.034 | -0.253 | | -0.001 | -0.006 | |
| | | 14.096 | | | -0.107 | | | -0.001 |
| 501 | | | | | | | | |
| | 1 | 0.000 | | | 0.000 | | | 0.000 |
| | | 0.803 | 0.000 | 0.000 | | 0.001 | -0.002 | |
| | | 7.874 | 0.000 | 0.000 | | 0.000 | 0.001 | |
| | | 14.753 | 0.000 | 0.000 | | -0.001 | -0.001 | |
| | | 15.556 | | | 0.000 | | | 0.000 |
| | 2 | 0.000 | | | 0.006 | | | 0.004 |
| | | 0.803 | 0.003 | 0.009 | | 0.016 | 0.103 | |
| | | 14.753 | 0.003 | 0.027 | | 0.014 | 0.103 | |
| | | 15.556 | | | 0.006 | | | 0.004 |
| | 3 | 0.000 | | | 0.005 | | | 0.004 |
| | | 0.803 | 0.002 | 0.009 | | 0.016 | 0.102 | |
| | | 14.753 | 0.002 | 0.026 | | 0.014 | 0.101 | |
| | | 15.556 | | | 0.005 | | | 0.004 |
| | 4 | 0.000 | | | -0.006 | | | -0.004 |

LIGHT SUPPORT





PAGE 63
PROGRAM:SAP90/FILE:CM-A-04.F3F
WHC/MPF CAMERA ASSEMBLY MODEL JOB#: 66458-01 RUN: CM-A-04

F R A M E  E L E M E N T  F O R C E S

| ELT ID | LOAD COMB | DIST END1 | 1-2 PLANE SHEAR | 1-2 PLANE MOMENT | AXIAL FORCE | 1-3 PLANE SHEAR | 1-3 PLANE MOMENT | AXIAL TORQ |
|---|---|---|---|---|---|---|---|---|
| | | 0.803 | -0.003 | -0.009 | | -0.015 | -0.105 | |
| | | 14.753 | -0.003 | -0.027 | | -0.015 | -0.104 | |
| | | 15.556 | | | -0.006 | | | -0.004 |
| 502 | | | | | | | | |
| | 1 | 0.000 | | | 0.000 | | | 0.000 |
| | | 0.803 | 0.000 | 0.000 | | 0.001 | -0.002 | |
| | | 7.838 | 0.000 | 0.000 | | 0.000 | 0.001 | |
| | | 14.753 | 0.000 | 0.000 | | -0.001 | -0.001 | |
| | | 15.556 | | | 0.000 | | | 0.000 |
| | 2 | 0.000 | | | 0.002 | | | 0.004 |
| | | 0.803 | 0.000 | 0.006 | | 0.017 | 0.111 | |
| | | 14.753 | 0.000 | 0.004 | | 0.015 | 0.111 | |
| | | 15.556 | | | 0.002 | | | 0.004 |
| | 3 | 0.000 | | | 0.002 | | | 0.004 |
| | | 0.803 | 0.000 | 0.006 | | 0.017 | 0.109 | |
| | | 14.753 | 0.000 | 0.004 | | 0.015 | 0.109 | |
| | | 15.556 | | | 0.002 | | | 0.004 |
| | 4 | 0.000 | | | -0.002 | | | -0.004 |
| | | 0.803 | 0.000 | -0.006 | | -0.016 | -0.112 | |
| | | 14.753 | 0.000 | -0.004 | | -0.016 | -0.112 | |
| | | 15.556 | | | -0.002 | | | -0.004 |
| 503 | | | | | | | | |
| | 1 | 0.000 | | | 0.000 | | | 0.000 |
| | | 0.803 | 0.000 | 0.000 | | 0.001 | -0.002 | |
| | | 7.814 | 0.000 | 0.000 | | 0.000 | 0.001 | |
| | | 14.753 | 0.000 | 0.000 | | -0.001 | -0.001 | |
| | | 15.556 | | | 0.000 | | | 0.000 |
| | 2 | 0.000 | | | 0.001 | | | 0.003 |
| | | 0.803 | 0.003 | 0.023 | | 0.013 | 0.082 | |
| | | 14.753 | 0.003 | 0.019 | | 0.011 | 0.082 | |
| | | 15.556 | | | 0.001 | | | 0.003 |
| | 3 | 0.000 | | | 0.001 | | | 0.003 |
| | | 0.803 | 0.003 | 0.022 | | 0.013 | 0.080 | |
| | | 14.753 | 0.003 | 0.019 | | 0.011 | 0.080 | |
| | | 15.556 | | | 0.001 | | | 0.003 |
| | 4 | 0.000 | | | -0.001 | | | -0.003 |
| | | 0.803 | -0.003 | -0.023 | | -0.012 | -0.083 | |
| | | 14.753 | -0.003 | -0.019 | | -0.012 | -0.083 | |
| | | 15.556 | | | -0.001 | | | -0.003 |
| 504 | | | | | | | | |
| | 1 | 0.000 | | | 0.000 | | | 0.000 |
| | | 0.803 | 0.000 | 0.000 | | 0.000 | 0.000 | |

LIGHT SUPPORT

3/8" GAS PIPE

WHC/MPF CAMERA ASSEMBLY MODEL JOB#: 66458-01 RUN: CM-A-04

F R A M E  E L E M E N T  F O R C E S

| ELT ID | LOAD COMB | DIST END1 | 1-2 PLANE SHEAR | 1-2 PLANE MOMENT | AXIAL FORCE | 1-3 PLANE SHEAR | 1-3 PLANE MOMENT | AXIAL TORQ |
|---|---|---|---|---|---|---|---|---|
| | | 5.363 | 0.000 | 0.000 | | 0.000 | 0.000 | |
| | | 10.197 | 0.000 | 0.000 | | 0.000 | 0.000 | |
| | | 11.000 | | | 0.000 | | | 0.000 |
| | 2 | 0.000 | | | 0.032 | | | 0.001 |
| | | 0.803 | 0.001 | 0.007 | | 0.008 | 0.038 | |
| | | 10.197 | 0.001 | 0.007 | | 0.009 | 0.043 | |
| | | 11.000 | | | 0.032 | | | 0.001 |
| | 3 | 0.000 | | | 0.032 | | | 0.001 |
| | | 0.803 | 0.001 | 0.007 | | 0.008 | 0.038 | |
| | | 10.197 | 0.001 | 0.007 | | 0.009 | 0.043 | |
| | | 11.000 | | | 0.032 | | | 0.001 |
| | 4 | 0.000 | | | -0.032 | | | -0.001 |
| | | 0.803 | -0.001 | -0.007 | | -0.008 | -0.038 | |
| | | 10.197 | -0.001 | -0.007 | | -0.008 | -0.042 | |
| | | 11.000 | | | -0.032 | | | -0.001 |
| 505 | | | | | | | | |
| | 1 | 0.000 | | | 0.000 | | | 0.000 |
| | | 0.803 | 0.000 | 0.000 | | 0.000 | 0.000 | |
| | | 5.520 | 0.000 | 0.000 | | 0.000 | 0.000 | |
| | | 10.197 | 0.000 | 0.000 | | 0.000 | 0.000 | |
| | | 11.000 | | | 0.000 | | | 0.000 |
| | 2 | 0.000 | | | 0.029 | | | 0.001 |
| | | 0.803 | 0.002 | 0.007 | | 0.010 | 0.047 | |
| | | 10.197 | 0.002 | 0.007 | | 0.009 | 0.043 | |
| | | 11.000 | | | 0.029 | | | 0.001 |
| | 3 | 0.000 | | | 0.028 | | | 0.001 |
| | | 0.803 | 0.002 | 0.007 | | 0.010 | 0.047 | |
| | | 10.197 | 0.002 | 0.007 | | 0.009 | 0.043 | |
| | | 11.000 | | | 0.028 | | | 0.001 |
| | 4 | 0.000 | | | -0.029 | | | -0.001 |
| | | 0.803 | -0.002 | -0.007 | | -0.010 | -0.048 | |
| | | 10.197 | -0.002 | -0.007 | | -0.010 | -0.043 | |
| | | 11.000 | | | -0.029 | | | -0.001 |

3/8 GAS PIPE

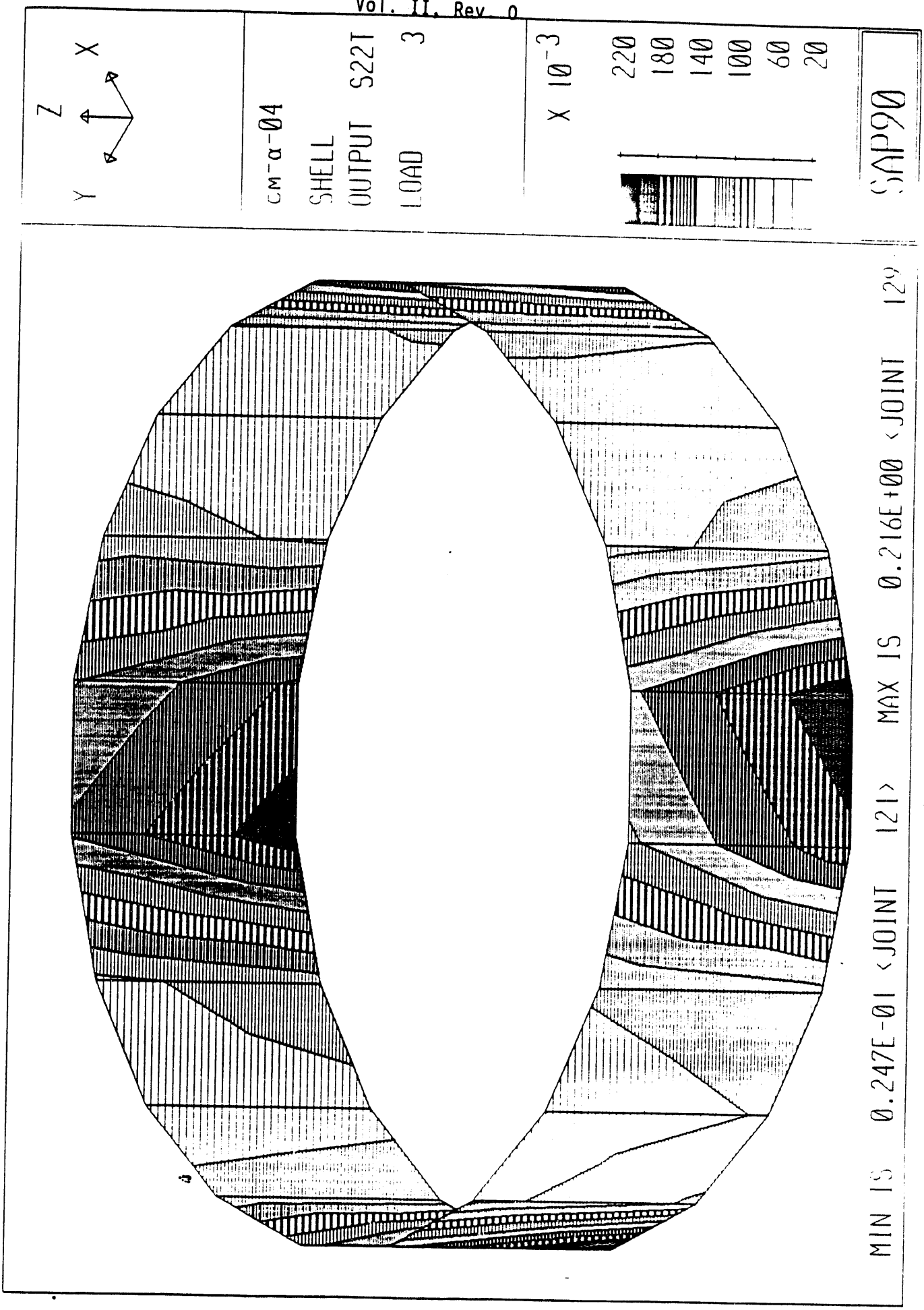
Z
X
Y
CM-α-04
SHELL
OUTPUT S22T
LOAD 3
X 10^-3
220
180
140
100
60
20
SAP90
MIN IS 0.247E-01 <JOINT 121>
MAX IS 0.216E+00 <JOINT 12>

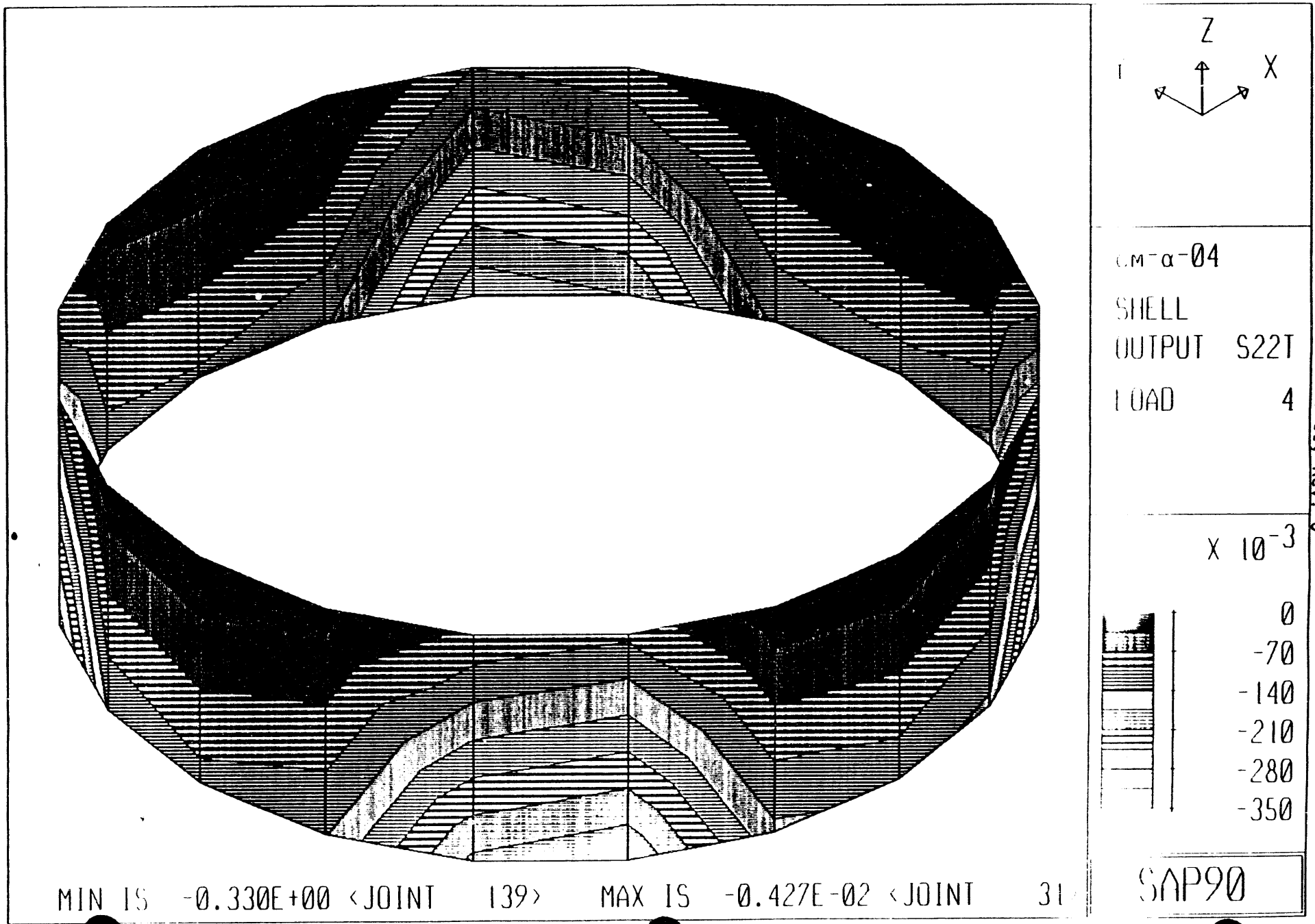
Z
X
CM-α-04
SHELL
OUTPUT S22T
LOAD 4
X 10^-3
0
-70
-140
-210
-280
-350
SAP90
MIN IS -0.330E+00 (JOINT 139) MAX IS -0.427E-02 (JOINT 31

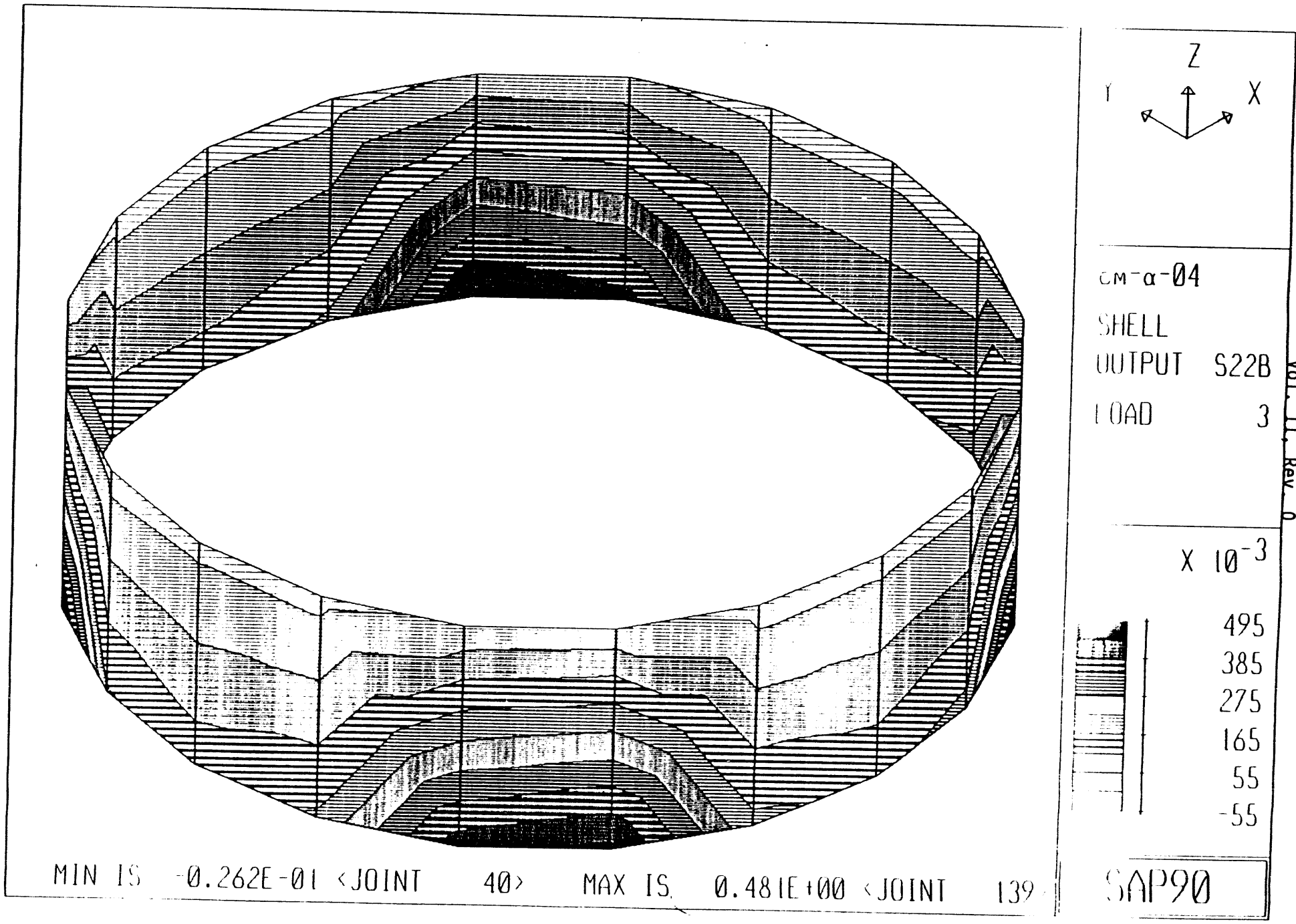
Z
Y
X
CM-α-04
SHELL
OUTPUT S22B
LOAD 3
X 10^-3
495
385
275
165
55
-55
SAP90
MIN IS -0.262E-01 <JOINT 40> MAX IS 0.481E+00 <JOINT 139>

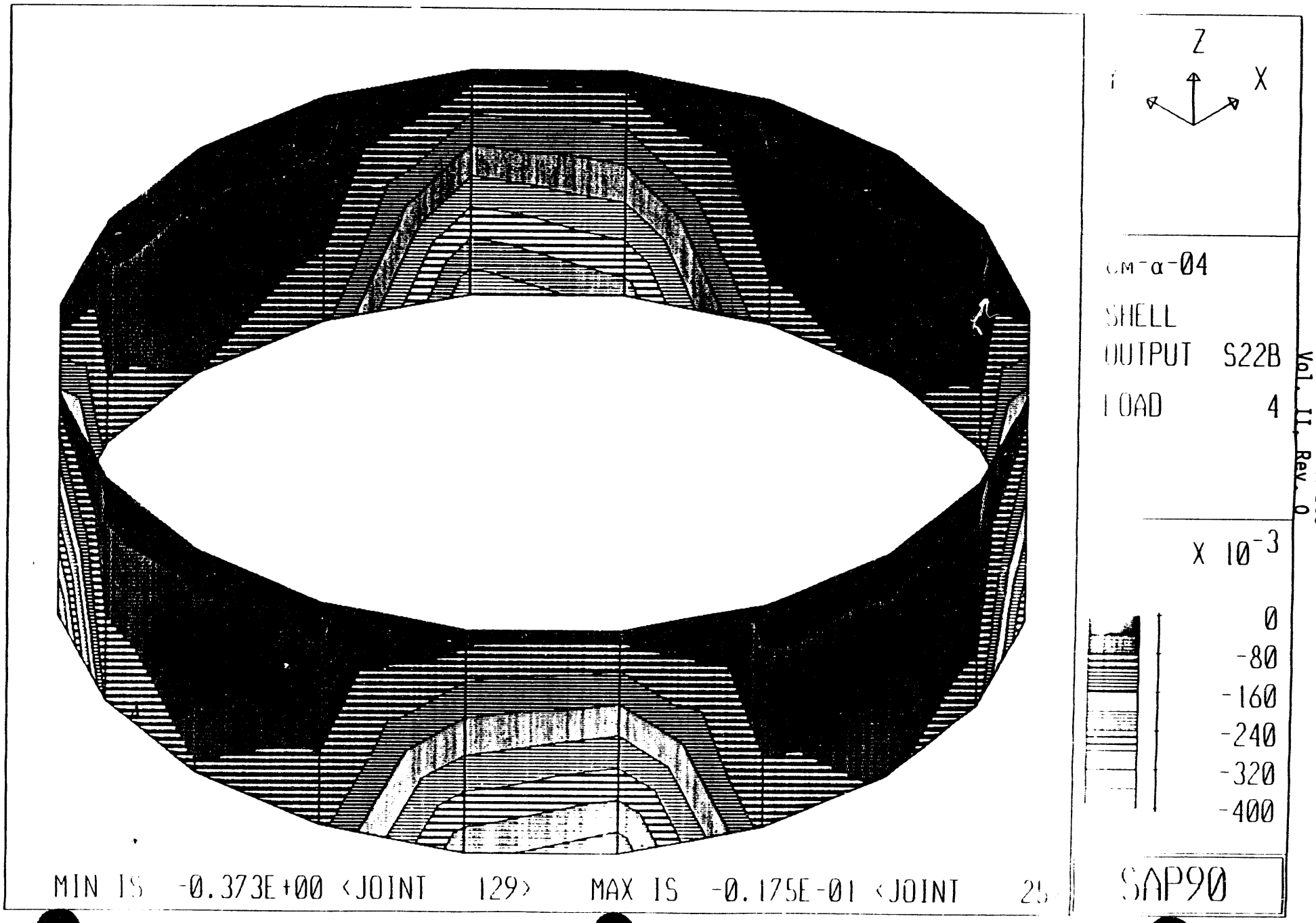
Z
X
CM-α-04
SHELL
OUTPUT S22B
LOAD 4
X 10^-3
0
-80
-160
-240
-320
-400
SAP90
MIN IS -0.373E+00 (JOINT 129) MAX IS -0.175E-01 (JOINT 25

7323

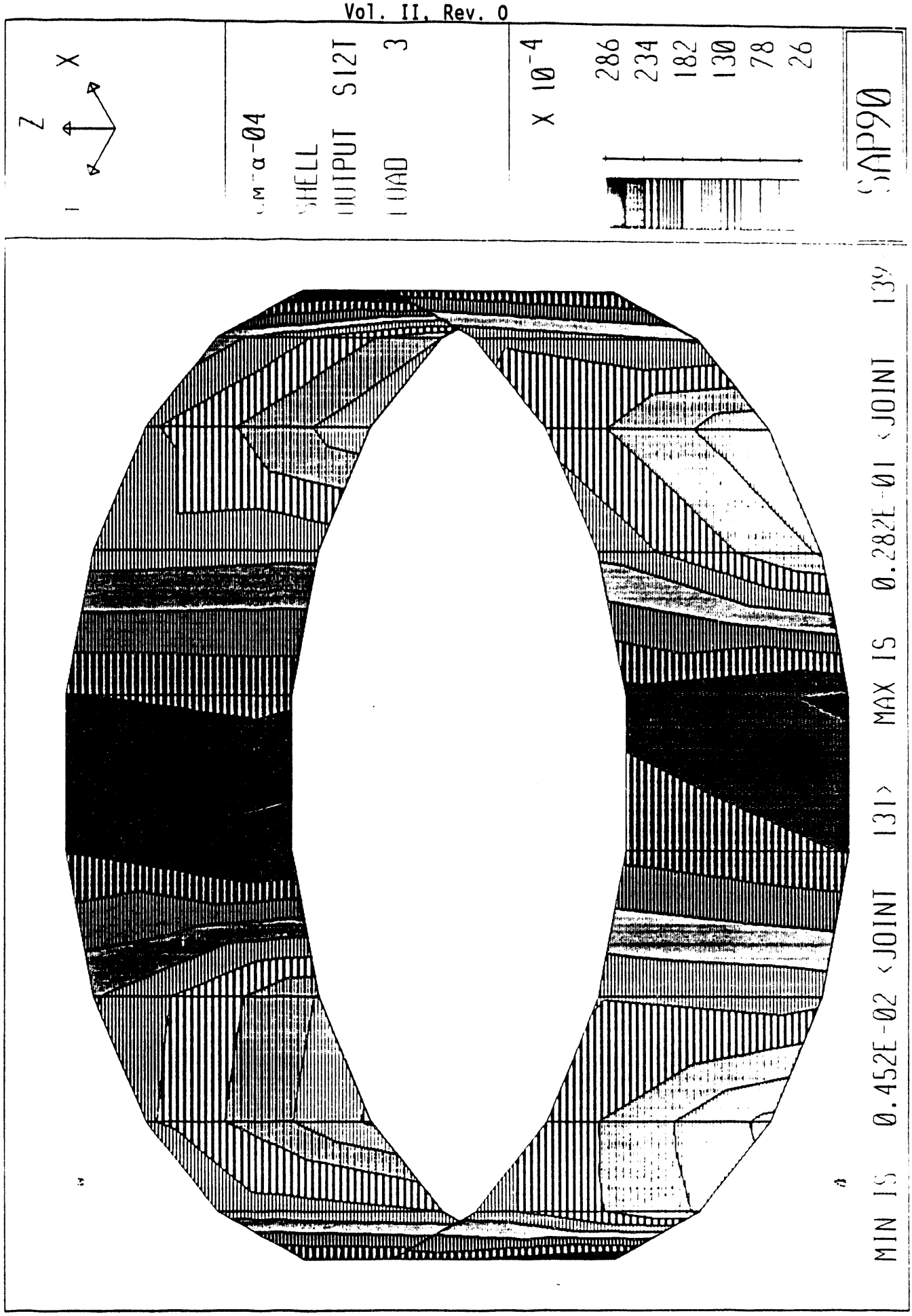
Z
X
SHELL
OUTPUT S12T
LOAD 3
X 10^-4
286
234
182
130
78
26
SAP90
MIN IS 0.452E-02 <JOINT 131>
MAX IS 0.282E-01 <JOINT 139

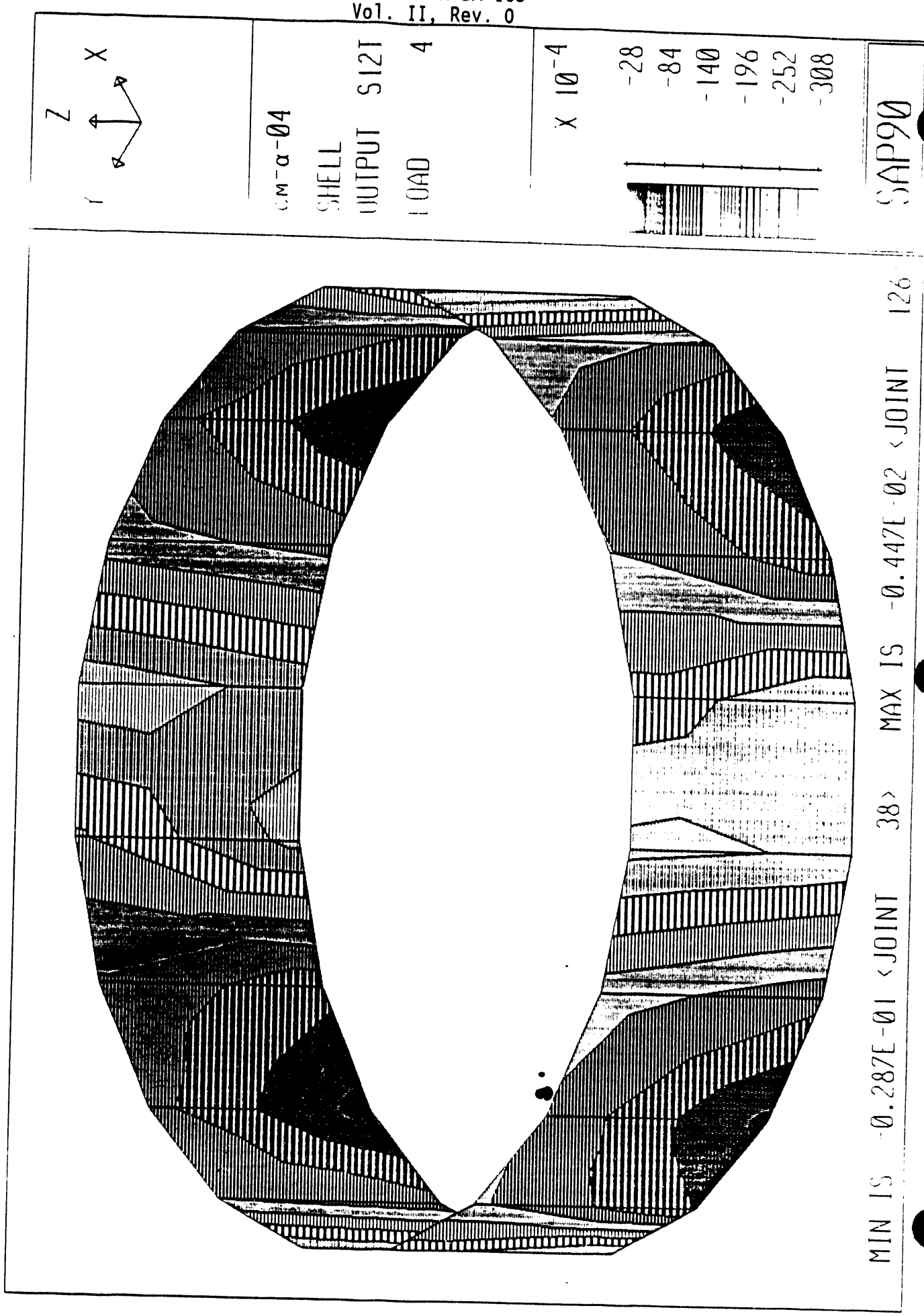
Z
X
CM-α-04
SHELL
OUTPUT S12T
LOAD 4
X 10^-4
-28
-84
-140
-196
-252
-308
SAP90
MIN IS -0.287E-01 <JOINT 38>
MAX IS -0.447E-02 <JOINT 126

7325

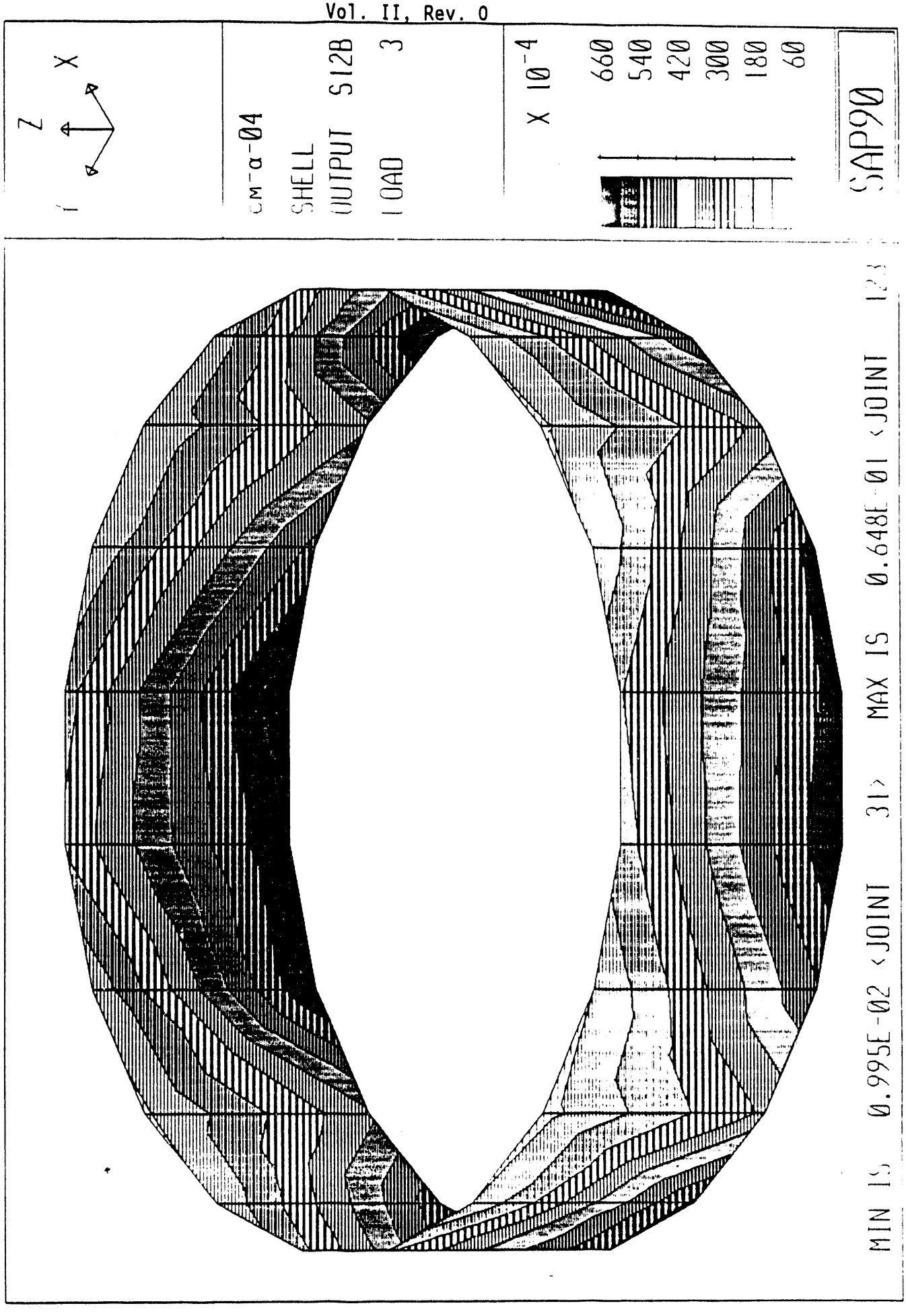
Z
X
CM-α-04
SHELL
OUTPUT S12B
LOAD 3
X 10^-4
660
540
420
300
180
60
SAP90
MIN IS 0.995E-02 <JOINT 31>
MAX IS 0.648E-01 <JOINT 12

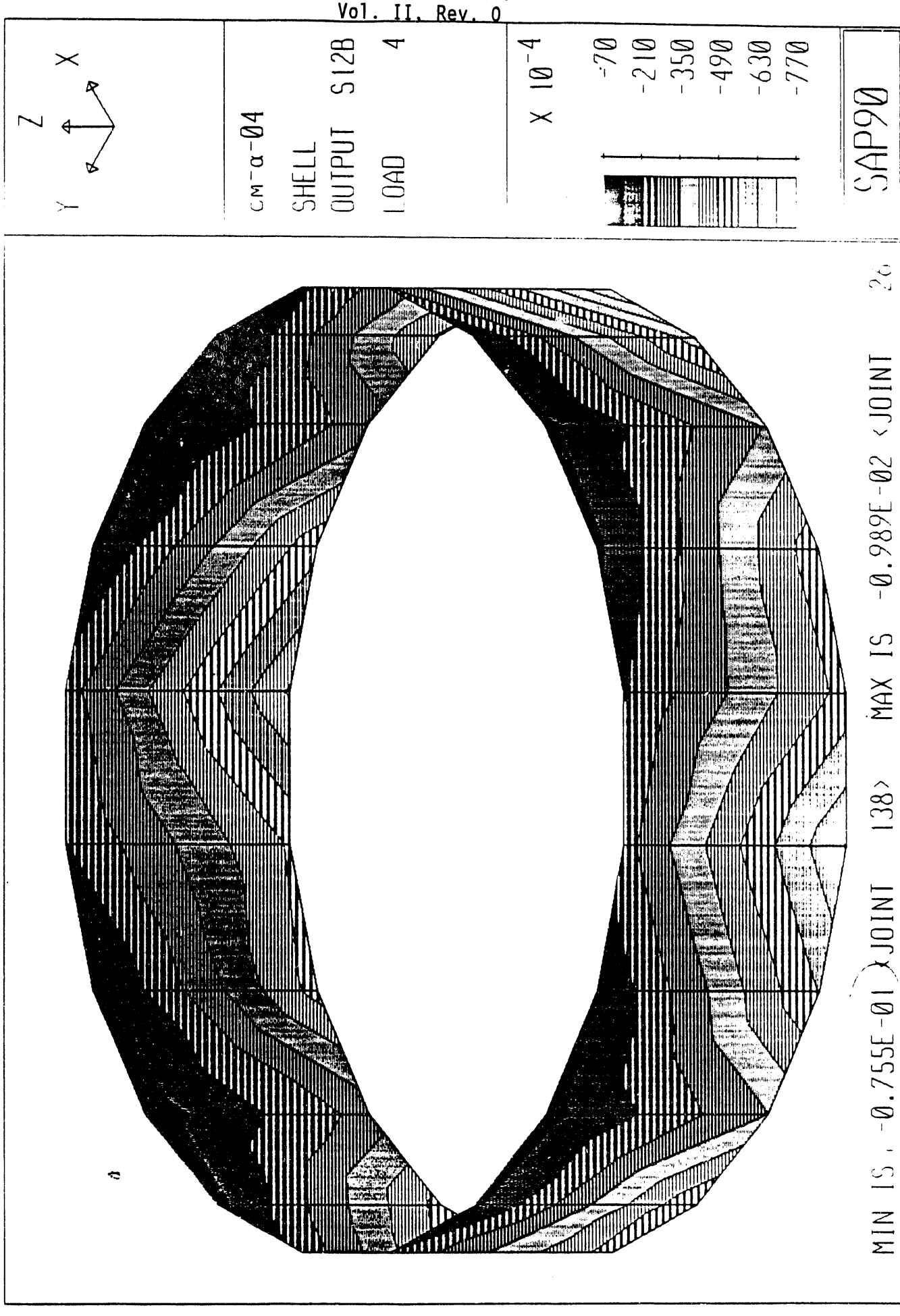
Z
X
Y
CM-α-04
SHELL
OUTPUT S12B
LOAD 4
X 10^-4
-70
-210
-350
-490
-630
-770
SAP90
MIN IS -0.755E-01 <JOINT 138>
MAX IS -0.989E-02 <JOINT 26

# 8. CHECK DISPLACEMENTS

## TABLE OF CONTENTS


| SECTION | CONTENTS | PAGE NO. |
|---|---|---|
| 8.1 | General Discussion | 8.1 1 |
| 8.2 | Summary of Displacements | 8.2 1 – 8 2.7 |

## 8.1 General Discussion

To determine the minimum clearance that needs to be provided for the installed camera to avoid interference with the riser and/or adjacent equipment already installed, results from SAP90 Model B were used. Model B is the same as Model A, except, it also included the amplification from the MPF riser stick model.

To be conservative, the center of gravity of the 128 lbs camera was located at the far corner coordinates of the camera geometry specified in the reference drawings (see Attachment A).

## 8.2 Summary of Displacements

The displacements at the center of gravity of the camera are given below. As for comparison purposes, displacements from both Model A and Model B were extracted from the SAP90 CM-A-04.SOL and CM-B-01.SOL files, respectively.

| Direction | Model A Disp (inches) | Model B Disp (inches) |
|---|---|---|
| X (horizontal) | 0.3708 | 0.377 |
| Y (horizontal) | 0.3747 | 0.382 |
| Z (vertical) | 0.00625 | 0.00732 |

As shown here, there are only slight differences between the displacements from Model A and Model B. The added MPF riser stick model was quite rigid.

PAGE 121
PROGRAM:SAP90/FILE:cm-a-04.SOL
WHC/MPF CAMERA ASSEMBLY MODEL JOB#: 66458-01 RUN: CM-A-04

J O I N T D I S P L A C E M E N T S

LOAD COMBINATION 1 - DISPLACEMENTS "U" AND ROTATIONS "R"

| | | | | | | |
|---|---|---|---|---|---|---|
| 2001 | -0.006597 | 0.007191 | -0.001297 | 0.000058 | 0.000059 | 0.000021 |

LOAD COMBINATION 2 - DISPLACEMENTS "U" AND ROTATIONS "R"

| JOINT | U(X) | U(Y) | U(Z) | R(X) | R(Y) | R(Z) |
|---|---|---|---|---|---|---|
| 2001 | 0.364245 | 0.367527 | 0.004955 | 0.000676 | 0.000678 | 0.003672 |

LOAD COMBINATION 3 - DISPLACEMENTS "U" AND ROTATIONS "R"

| JOINT | U(X) | U(Y) | U(Z) | R(X) | R(Y) | R(Z) |
|---|---|---|---|---|---|---|
| 2001 | 0.357649 | 0.374718 | 0.003657 | 0.000734 | 0.000737 | 0.003692 |

LOAD COMBINATION 4 - DISPLACEMENTS "U" AND ROTATIONS "R"

| JOINT | U(X) | U(Y) | U(Z) | R(X) | R(Y) | R(Z) |
|---|---|---|---|---|---|---|
| 2001 | -0.370842 | -0.360336 | -0.006252 | -0.000618 | -0.000619 | -0.003651 |

DISPL of CAMERA @ NODE 2001

SAP90 MODEL A (FIXED AT CENTER of FLANGE PLATE)

ABS DISPL of CAMERA

U(X) = 0.3708"

U(Y) = 0.3747"

U(Z) = 0.00625"

SRSS 0.5271"

WHC/MPF CAMERA ASSEMBLY MODEL JOB#: 66458-01 RUN: CM-B-01

J O I N T  D I S P L A C E M E N T S

LOAD COMBINATION 1 - DISPLACEMENTS "U" AND ROTATIONS "R" DL

| JOINT | U(X) | U(Y) | U(Z) | R(X) | R(Y) | R(Z) |
|---|---|---|---|---|---|---|
| 299 | -0.1816E-03 | -0.1867E-04 | -0.4891E-03 | 0.5561E-06 | -0.2816E-05 | 0.0000E+00 |
| 2001 | -0.006173 | 0.007293 | -0.001790 | 0.000059 | 0.000056 | 0.000022 |

LOAD COMBINATION 2 - DISPLACEMENTS "U" AND ROTATIONS "R" EQ

| JOINT | U(X) | U(Y) | U(Z) | R(X) | R(Y) | R(Z) |
|---|---|---|---|---|---|---|
| 299 | 0.001960 | 0.001967 | 0.000167 | 0.000021 | 0.000019 | 0.000001 |
| 2001 | 0.369091 | 0.372765 | 0.005365 | 0.000692 | 0.000691 | 0.003707 |

LOAD COMBINATION 3 - DISPLACEMENTS "U" AND ROTATIONS "R" DL + EQ

| JOINT | U(X) | U(Y) | U(Z) | R(X) | R(Y) | R(Z) |
|---|---|---|---|---|---|---|
| 299 | 0.001778 | 0.001948 | -0.000322 | 0.000021 | 0.000017 | 0.000001 |
| 2001 | 0.362918 | 0.380058 | 0.003575 | 0.000750 | 0.000747 | 0.003729 |

LOAD COMBINATION 4 - DISPLACEMENTS "U" AND ROTATIONS "R" DL - EQ

| JOINT | U(X) | U(Y) | U(Z) | R(X) | R(Y) | R(Z) |
|---|---|---|---|---|---|---|
| 299 | -0.002142 | -0.001986 | -0.000656 | -0.000020 | -0.000022 | -0.000001 |
| 2001 | -0.375263 | -0.365472 | -0.007155 | -0.000633 | -0.000635 | -0.003685 |

SAP90 MODEL B (INCL RISER . CENTER of FLANGE PLATE is FREE TO MOVE

ABS DISPL of CAMERA

| | Node 2001 Load case 2 | Node 2001 Load case | Node 299 Load case 2 |
|---|---|---|---|
| U(X) = | 0.369091 + | 0.006173 + | 0.00196 |
| = 0.377" | | | |

U(Y) = 0.372765 + 0.007293 + 0.001967
= 0.382"

U(Z) = 0.005365 + 0.00179 + 0.000167
= 0.00732"





23
by PRL 6/9/94
ARL: rpb 7/12/94

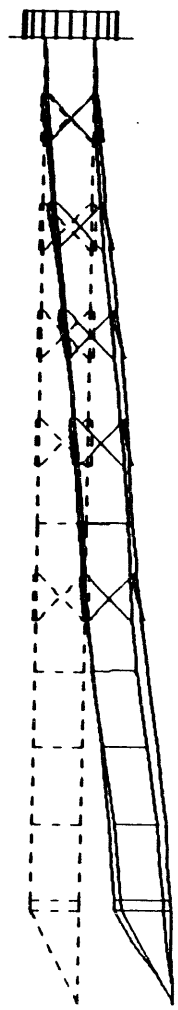

MODEL A

LOAD CASE 3 DL + EQ

Z

X

CM-A-04

DEFORMED SHAPE

LOAD 3

MINIMA

X 0.0000E+00

Y 0.0000E+00

Z -0.2083E-03

MAXIMA

X 0.3577E+00

Y 0.3747E+00

Z 0.4964E-02

SAP90

525
eg DM 6/8/94

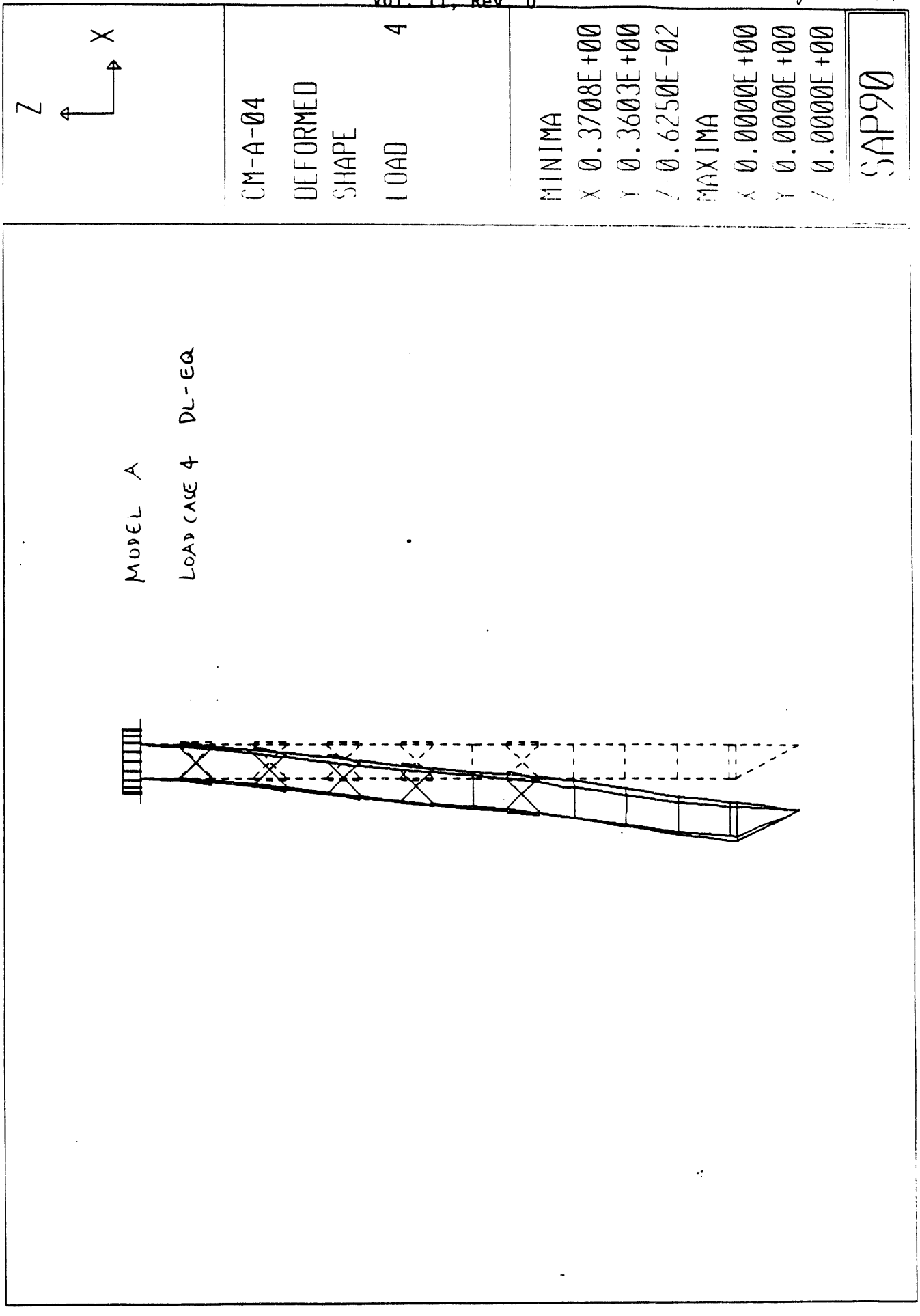

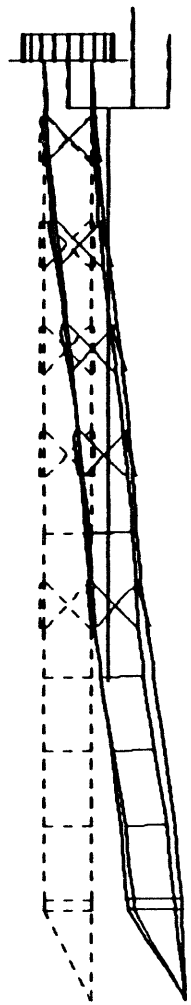

MODEL B

LOAD CASE 3 DL + EQ

Z

X

CM-B-01

DEFORMED SHAPE

LOAD 3

MINIMA

X 0.0000E+00

Y 0.0000E+00

Z -0.4669E-03

MAXIMA

X 0.3629E+00

Y 0.3801E+00

Z 0.4875E-02

SAP90

by PRL 6/8/94

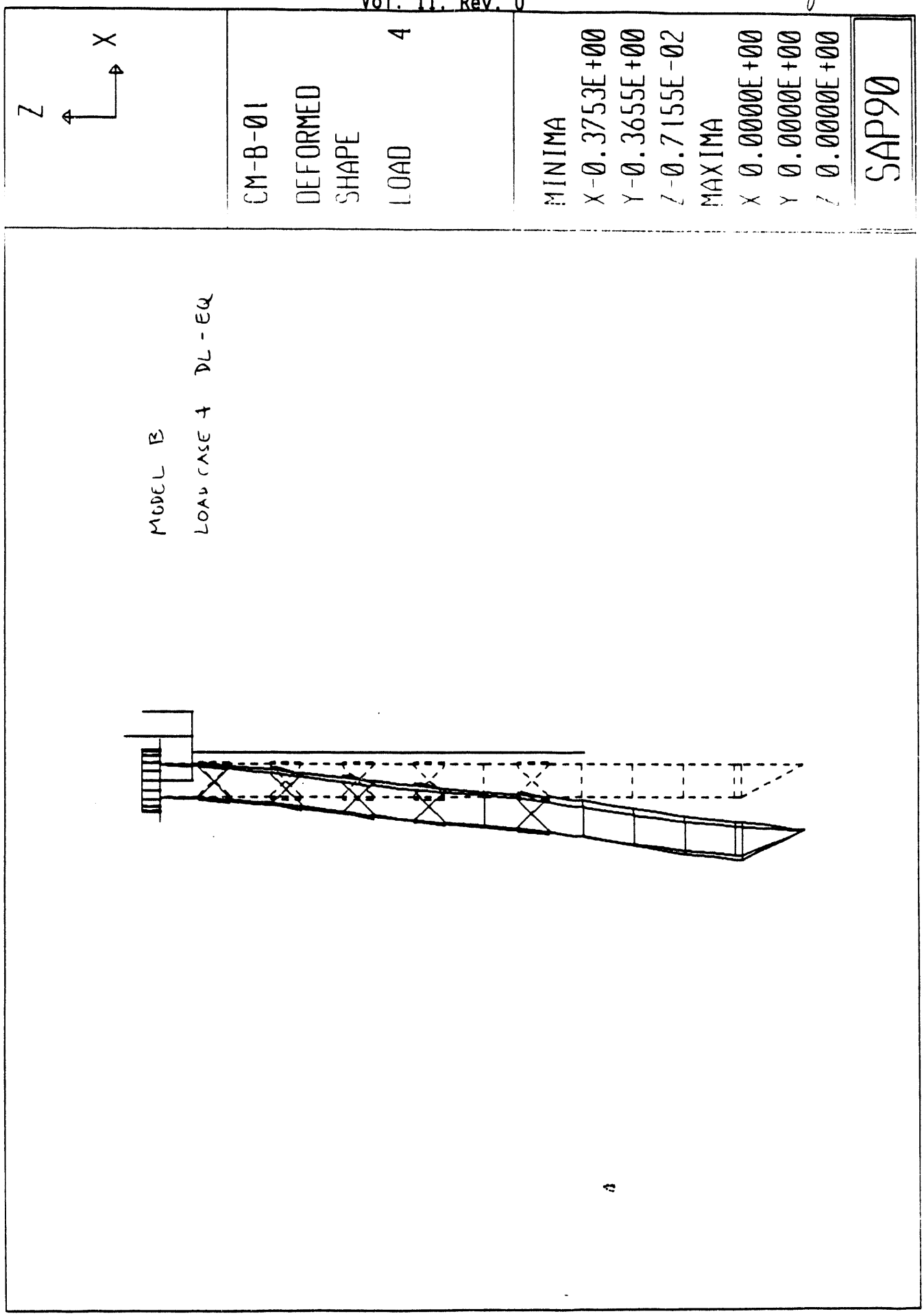
Z
X
CM-B-01
DEFORMED
SHAPE
LOAD 4
MINIMA
X -0.3753E+00
Y -0.3655E+00
Z -0.7155E-02
MAXIMA
X 0.0000E+00
Y 0.0000E+00
Z 0.0000E+00
SAP90
MODEL B
LOAD CASE 4 DL - EQ

# 9. SUMMARY

## TABLE OF CONTENTS


| SECTION | CONTENTS | PAGE NO. |
|---|---|---|
| 9.1 | Summary of Stress Ratios | 9.1.1 → 9.1.3 |
| 9.2 | Overall Analysis Conservatism | 9.2 |
| 9.3 | Recommended Modifications | 9.3.1 → 9.3.2 |

## 9.1 Summary of Stress Ratios

The stress ratios of each part and its connections are tabulated in Table 9-1.

# TABLE 9-1: SUMMARY OF STRESS RATIOS

WHC/MPF ANALYSIS --- CAMERA ASSEMBLY MODEL

JOB NO.: 66481-01

FILENAME: MAXSTRS.WQ1

PREPARED BY: [illegible] DATE 7/28/94

CHECKED BY: RIK DATE 8/3/94

SUMMARY OF STRESS RATIOS (AS IS)

| PART NO | DESCRIPTION | <— SAP90 MODEL--> NODE# | ELMT# | SIZE | THICK | STRESS (KSI) | ALLOWABLE STRESS (KSI) | CONTROLLING FORMULA | STRESS RATIO | COMMENTS | SHEET NO. |
|---|---|---|---|---|---|---|---|---|---|---|---|
| 42-1 | UPPER MAST ASSEMBLY | | | | | | | | | | |
| 42-2 | SHIELDING PLATE | 1-85 | 1001-1216 | 22"D | 3" | 0.0549 | 20.16 | 1.4(.4*fy) ; fy=36ksi | 0.0027 | | 6.2.2 |
| | BOLT w/ Manifold Tube | | | 1/2" 18-8 SS BOLT | | 0.922 | 33.6 | 1.6(.3*fu) ; ft=70ksi | 0.0274 | Lift load of 904 lbs controls | 7.2.2 |
| 42-3 | COVER PLATE | (Not modelled) | | 22"D | 1/4" | | | | | | |
| 42-4 | MANIFOLD ASSEM | (Modelled 42-5 only) | | | | | | | | | |
| 42-5 | MANIFOLD TUBE | 21-140 | 2001-2020 | 22"D | 1" | 0.89 | 14 | 1.4*(0.4*fy); fy=25ksi | 0.0636 | | 6.2.3 |
| | BOLT w/ Shielding Plate | | | (see Part No. 42-2) | | | | | | | |
| | WELD w/ Flange Plate | | | 3/8" Fillet Weld | | 0.974 | 10.5 | 1.4*(0.4*fy*2*3/8); fy=25 | 0.0928 | Base Metal (Pipe) controls | 7.3.6 |
| 42-6 | DIVIDING PLATE | (Not modelled) | | 19.65x4" | 3/8" | | | | | | |
| 42-7 | FLANGE PLATE | 101-240 | 3001-3420 | 27.5"D | 3/4" | 2.94 | 14 | 1.4*(0.4*fy); fy=25ksi | 0.2100 | | 6.2.4 |
| | BOLT w/ 20" Riser | | | 1 1/8 ASTM A307 | | 0.851k | 30.4k | 1.6*Ft ;Ft=19k/bolt | 0.0280 | Hydrogen burn 60 psi ctrl | 7.2.4 |
| | WELD w/ SS Pipes | | | 3/16" Fillet Weld | | 0.758 | 2.625 | 1.4*(0.4*fy*3/16); fy=25 | 0.2888 | Base Metal (Pipe) controls | 7.3.6 |
| 42-8 | 1 1/4 IPS PIPE | 141-1104 | 201-240 | 107.9" | 0.14" | | | | 0.2200 | Stress ratio from SAPSTL (See welding w/ 42-7,42-2 40-5,40-4,40-12) | 5.3.11 |
| 42-9 | PIPE WELDING DETAIL | | (N/A) | | | | | | | | |
| 42-10 | CROSS BRACE DETAIL | | (N/A) | | | | | | | | |
| 42-11 | FLANGE PLT GASK | (Not modelled) | | | 1/8" | | | | | | |
| 42-12 | MATING PLT GASK | (Not modelled) | | | 1/8" | | | | | | |
| 40-3 | MATING PLATE | 1101-1104 | 4001 | 13"x13" | 1/2" | 2.6 | 14 | 1.4*(0.4*fy); fy=25ksi | 0.1857 | | 6.2.7 |
| | WELD w/ SS Pipes | | | 3/16" Fillet Weld | | 0.312 | 2.625 | 1.4*(0.4*fy*3/16); fy=25 | 0.1189 | Base Metal (Pipe) controls | 7.3.6 |
| 40-5 | CROSS BRACE | 301-1014 | 401-420 | 1"x15" | 3/16" | | | | 0.3560 | t=3/16" gives kl/r >200 | 5.3.13 |
| | WELD w/ SS Pipes | | | 3/16" Fillet Weld | | 1.968 | 5.25 | 1.4*(0.4*fy*2*3/16); fy=25 | 0.3749 | Base Metal (Pipe) controls | 7.3.6 |





9.1.2

# TABLE 9-1: SUMMARY OF STRESS RATIOS (CONTINUED)

WHC/MPF ANALYSIS --- CAMERA ASSEMBLY MODEL — JOB NO.: 66481-01 — FILENAME: MAXSTRS.WQ1 — PREPARED BY: PAC — DATE 9/94

SUMMARY OF STRESS RATIOS (AS IS) — CHECKED BY: RIL — DATE 7/3/94

| PART NO. | DESCRIPTION | <--- SAP90 MODEL---> NODE# | ELMT# | SIZE | THICK | STRESS (KSI) | ALLOWABLE STRESS (KSI) | CONTROLLING FORMULA | STRESS RATIO | COMMENTS | SHEET NO. |
|---|---|---|---|---|---|---|---|---|---|---|---|
| 40-1 | LOWER MAST ASSEMBLY | | | | | | | | | | |
| | | | | | | MAX | ALLOWABLE | | | | CALS |
| 40-2 | BOTTOM PLATE | 1801-1804 | 4002 | 13"x13" | 1/2" | 0.0157 | 14 | 1.4*(0.4*fy); fy=25ksi | 0.0011 | | 6 2 7 |
| | WELD w/ SS Pipes | | | 3/16" Fillet Weld | | 0.541 | 2.625 | 1.4*(0.4*fy*3/16); fy=25 | 0.2061 | Base Metal (Pipe) controls | 7 3 6 |
| 40-3 | MATING PLATE | 1101-1104 | 4001 | 13"x13" | 1/2" | (SEE PREVIOUS PAGE) | | | | | |
| 40-4 | LIGHT SUPPORT | 1401-1603 | 501-503 | 13.9"x1" | 3/8" | | | | 0.1670 | Stress ratio from SAPSTL | 5 3 14 |
| | WELD w/ SS Pipes | | | 1/8" Fillet Weld | | 0.75 | 3.5 | 1.4*(0.4*fy*2*1/8); fy=25 | 0.2143 | Base Metal (Pipe) controls | 7 3 6 |
| 40-5 | CROSS BRACE | 301-1014 | 401-420 | 1"x15" | 3/16" | (SEE PREVIOUS PAGE) | | | | | |
| 40-6 | GAS TUBE DETAIL | | (N/A) | | | | | | | | |
| 40-7 | LIGHT FITTING DETAIL | | (N/A) | | | | | | | | |
| 40-8 | CROSS BRACE DETAIL | | (N/A) | | | | | | | | |
| 40-9 | PIPE WELDING DETAIL | | (N/A) | | | | | | | | |
| 40-10 | 1/2NPT NIPPLE MO | (Not modelled) | | .84"D | 1/2" | | | | | | |
| 40-11 | 1 1/4 IPS PIPE | 1101-1804 | 241-268 | 86 0" | 0 14" | | | | 0 1450 | Stress ratio from SAPSTL | 5 3 12 |
| 40-12 | 3/8 IPS GAS PIPE | 1702-1704 | 504-505 | 675"D | 0 15" | | | | 0 0670 | Stress ratio from SAPSTL | 5 3 14 |
| | WELD w/ SS Pipes | | | 1/8" Fillet Weld | | 0 149 | 3 5 | 1 4*(0 4*fy*2*1/8); fy=25 | 0 0426 | Base Metal (Pipe) controls | 7 3 6 |
| 40 13 | FITTING | (Not modelled) | | | 4" | | | | | | |
| 40 14 | FITTING GASKET | (Not modelled) | | | 1/8" | | | | | | |

## 9.2 Overall Analysis Conservatism

There are conservatism in this analysis, the main ones are as follows:

1. Response Spectra for vertical direction was not scaled to 2/3. 100% of the Non-safety Class 2 spectrum (0.12g ZPA) was used.

2. 2% damped response spectrum was used in the preliminary analysis. In fact, 5% damped response spectrum can be used which lower the spectrum by approximately 20% in the frequency range of .1 to 10 Hz. Note that the first mode frequencies for the entire camera assembly are 3.21 Hz for Model A and 3.18 Hz for Model B.

3. For material specified as 300 series SS, 308L specifications was used:

   Allowable yield stress = 25 ksi
   Tensile strength = 70 ksi

4. The center of gravity of the camera roll mechanism (Dwg. 4-11, pg. A.33) is located at the far corner of the unit to create the worst case of eccentricity.

## 9.3 Recommended Modifications

From the analysis, it is recommended the following be modified:

**The KL/R ratios of the cross braces (40-5) exceed 200. Four options were under considerations as shown on Figure 9-1. It is recommended to incorporate the modifications as shown on Option No. 4.**

SEE ATTACHMENT E (Pg. E.0.1 → E 0.3) FOR FINAL "AS-BUILT" DETAILS of CROSS-BRACES.

by. PM 8/8/94

Chk'd. RIK 8/8/94

932

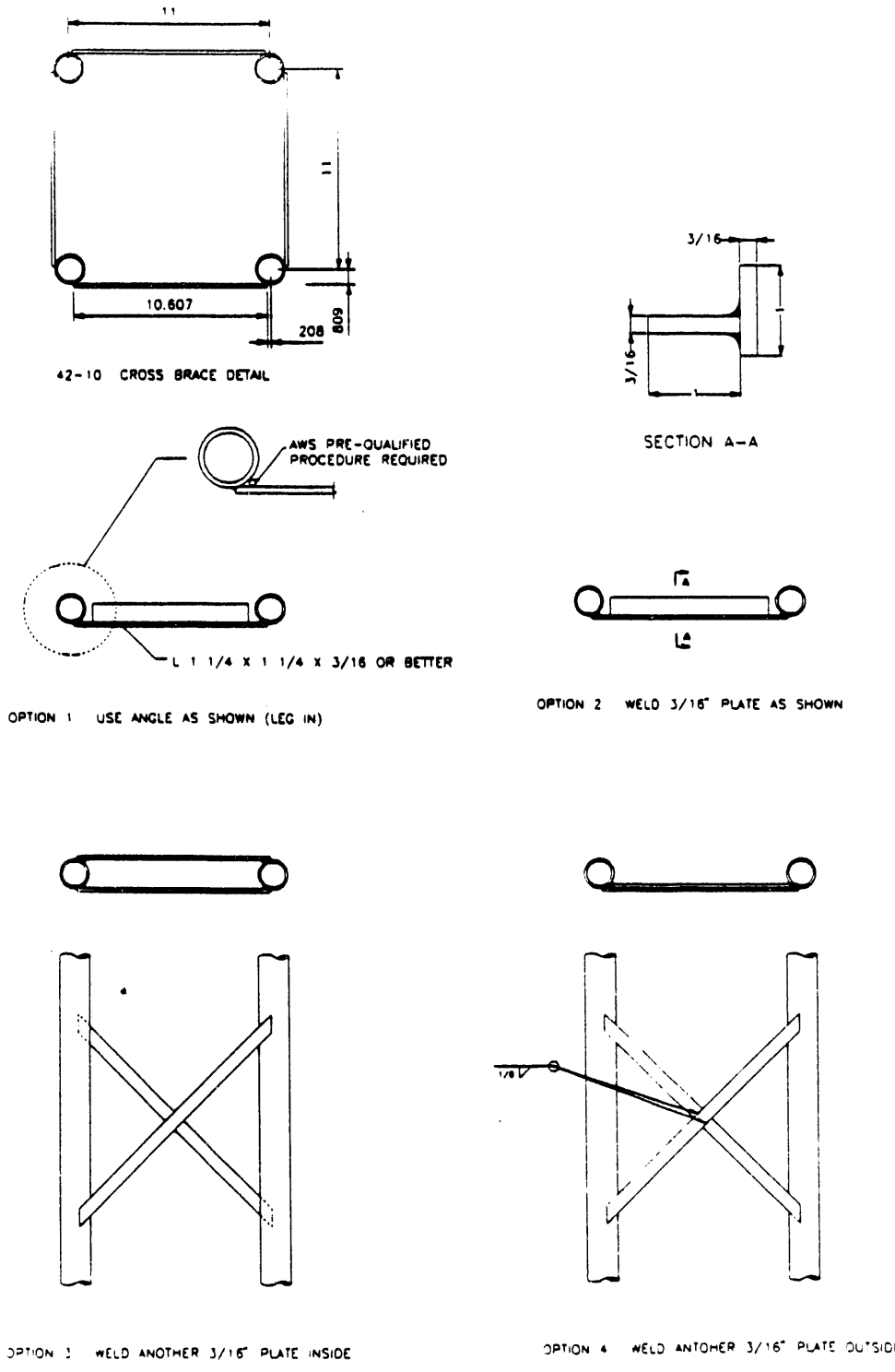


Fig. 9-1 CROSS-BRACES MODIFICATION OPTIONS

# ATTACHMENT A

CRESTONE PRODUCTS INC.

AW-101
Camera
Mast
4/29/94

JOB # _____
Orig to:
___ Correspondence
___ Budget/Contract
___ _____
Copies to:

# UPPER MAST

| DESCRIPTION | | QTY PER ASSEMBLY |
|---|---|---|
| 42-1 | UPPER MAST ASSEMBLY | |
| 42-2 | SHIELDING PLATE | 1 |
| 42-3 | COVER PLATE | 1 |
| 42-4 | MANIFOLD ASSEMBLY | |
| 42-5 | MANIFOLD TUBE | 1 |
| 42-6 | DIVIDING PLATE | 1 |
| 42-7 | FLANGE PLATE | 1 |
| 42-8 | 1 1/4 IPS UPPER PIPE | 4 |
| 42-9 | PIPE WELDING DETAIL | |
| 42-10 | CROSS BRACE DETAIL | |
| 42-11 | FLANGE PLATE GASKET | 1 |
| 42-12 | MATING PLATE GASKET | 1 |
| 40-3 | MATING PLATE | 1 |
| 40-5 | CROSS BRACE | 16 |

NOTE: THESE DRAWINGS WERE UPDATED AS MARKED PER WHC'S FAX DATED 6/3/94 (SEE ATTACHED)



4175 W. Quail Ridge Dr. • Boise, Idaho 83703
Tel (208) 368-7998 • Fax (208) 368-7999

# 42-1 UPPER MAST ASSEMBLY WITH SHIELDING PLATE

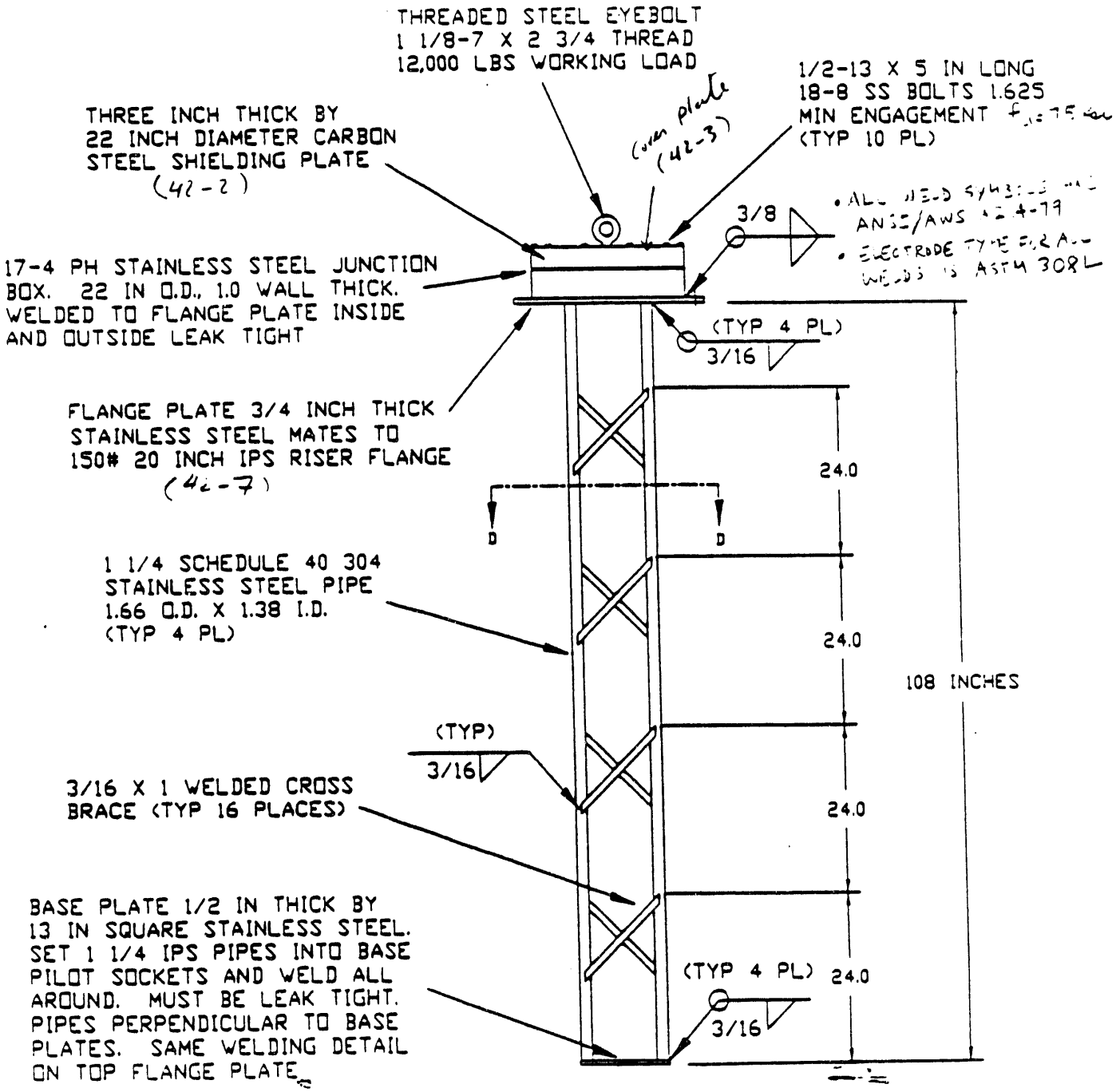


CRESTONE PRODUCTS, INC.
4175 W. QUAIL RIDGE DR.
BOISE, ID 83703
TEL 208-368-7998
FAX 208-368-7999

# 42-2 SHIELDING PLATE

MATL: CARBON STEEL A36
TOL: .XX ±.020 .X ±.050

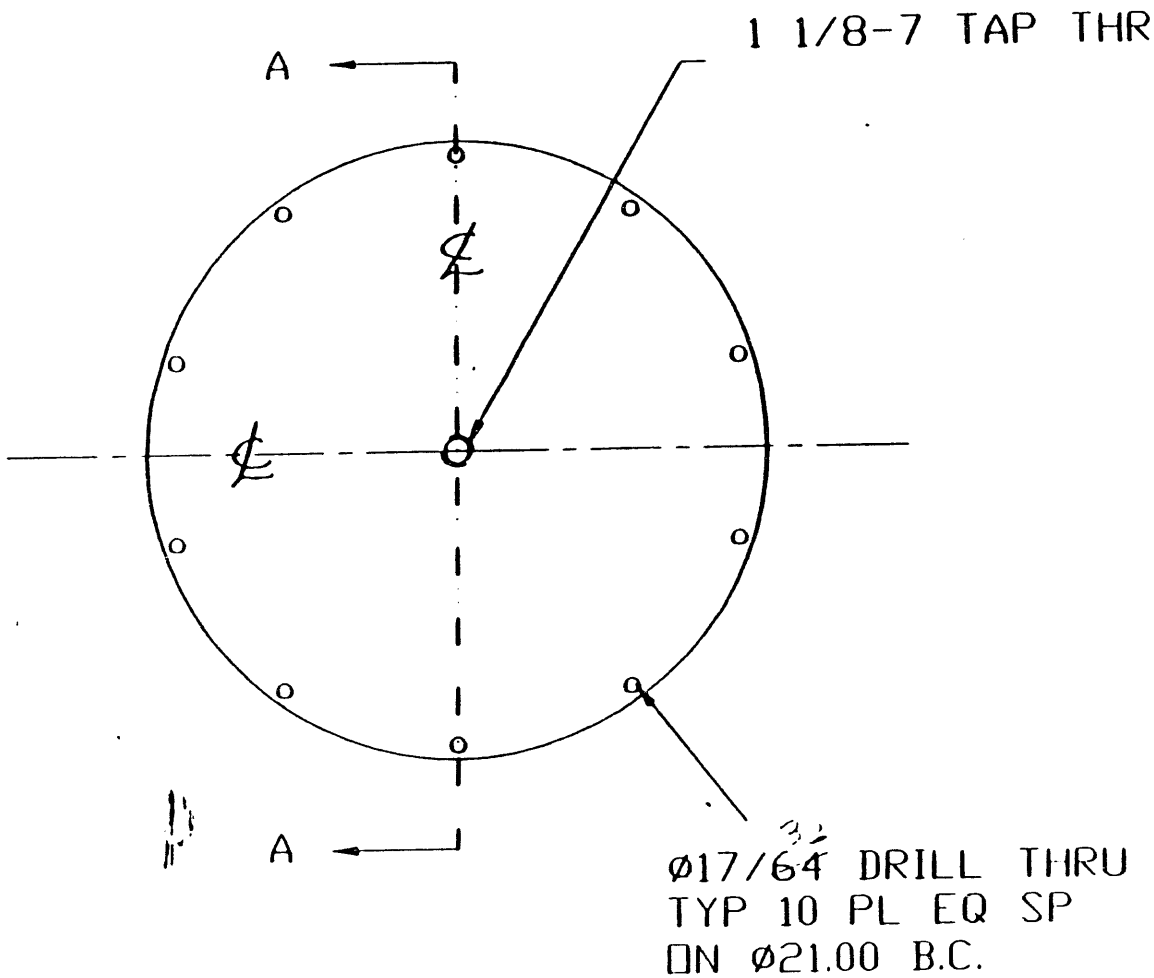


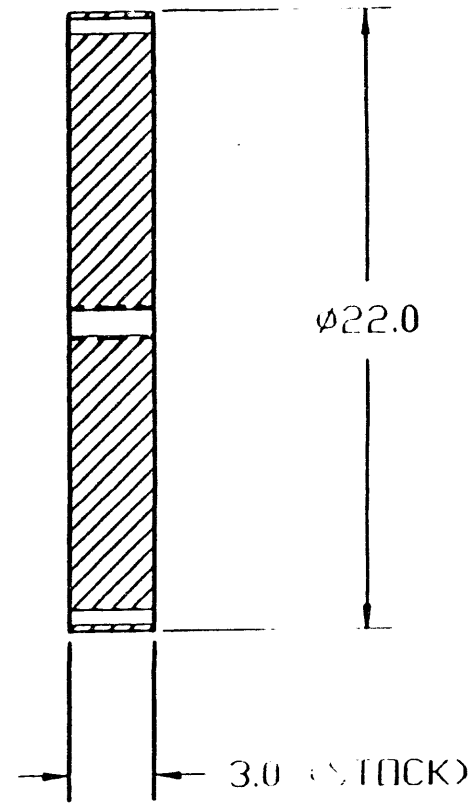


SECTION A-A

CRESTONE PRODUCTS, INC.
4175 W. QUAIL RIDGE DR.
BOISE, ID 83703
TEL 208-368-7998
FAX 208-368-7999

# 42-3 COVER PLATE

MATL: 300 SERIES SS

TOL: .XX ±.020 .X ±.050

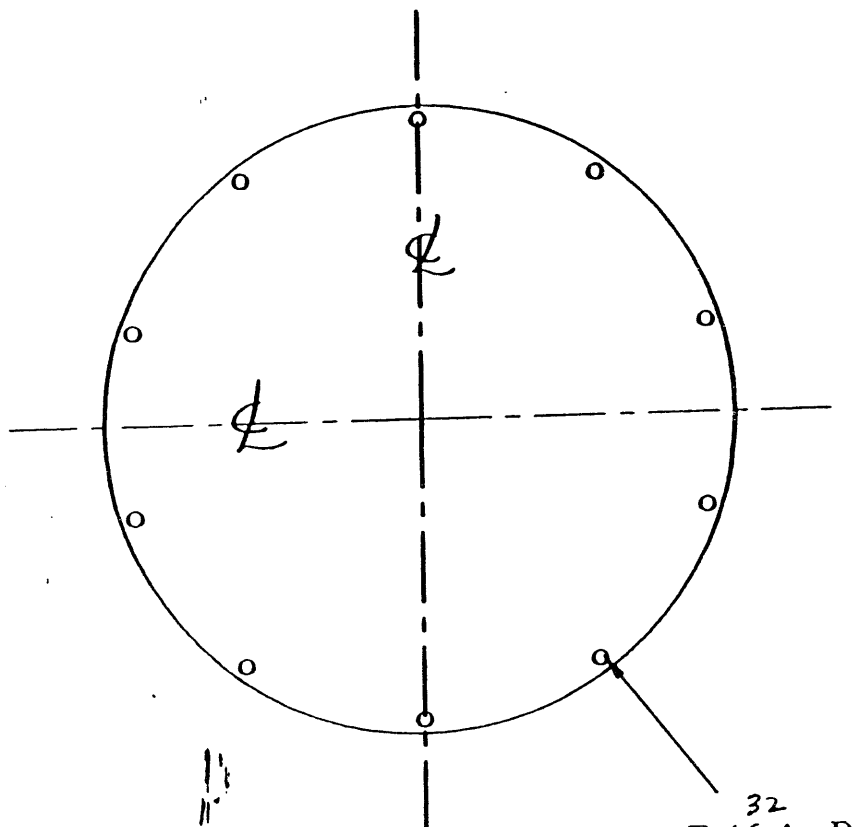

Ø17/~~64~~ 32 DRILL THRU
TYP 10 PL EQ SP
ON Ø21.00 B.C.

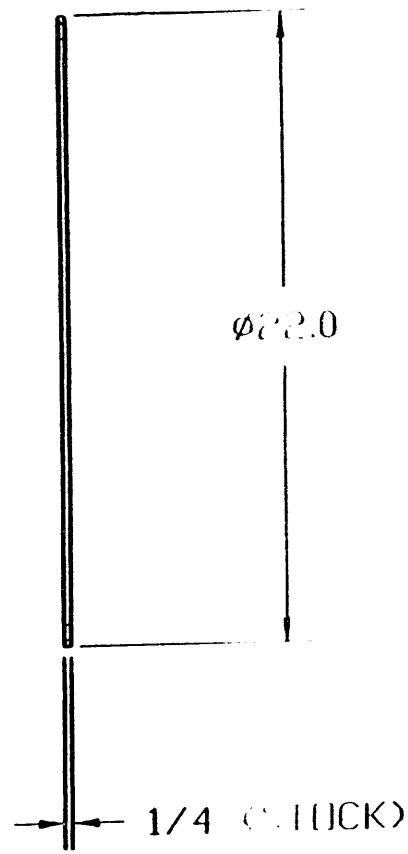


CRESTONE PRODUCTS, INC.
4175 W. QUAIL RIDGE DR.
BOISE, ID 83703
TEL 208-368-7998
FAX 208-368-7999





A 4

CRESTONE PRODUCTS, INC.
4175 W. QUAIL RIDGE DR.
BOISE, ID 83703
TEL 208-368-7998
FAX 208-368-7999

# 42-4 MANIFOLD ASSEMBLY

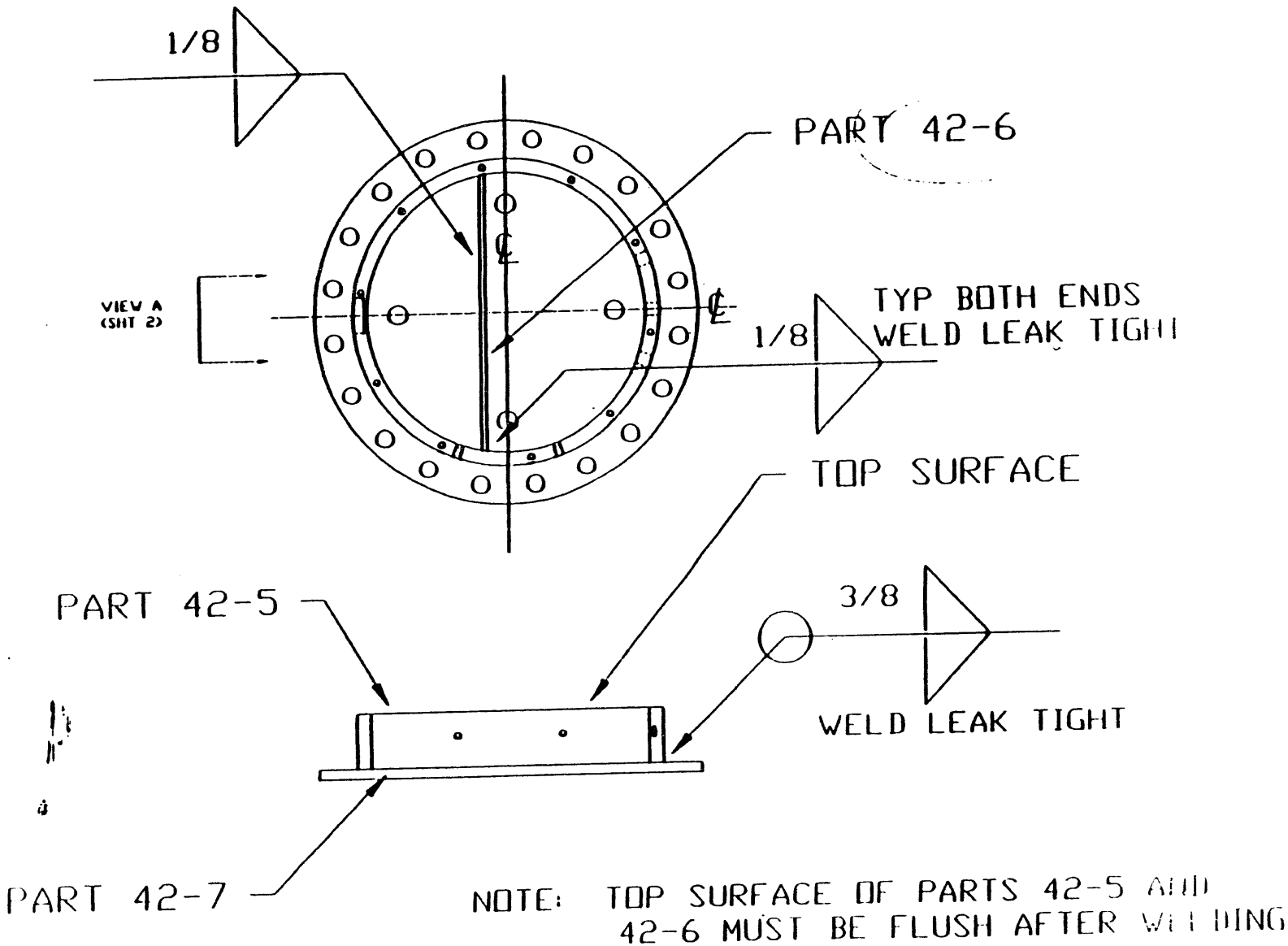


NOTE: TOP SURFACE OF PARTS 42-5 AND 42-6 MUST BE FLUSH AFTER WELDING

# 42-5 MANIFOLD TUBE

(SHEET 1 OF 3)

MATL: ~~17-4 PH~~ 304 STAINLESS STEEL TUBING

TOL: .X ±.050 .XX ±.020

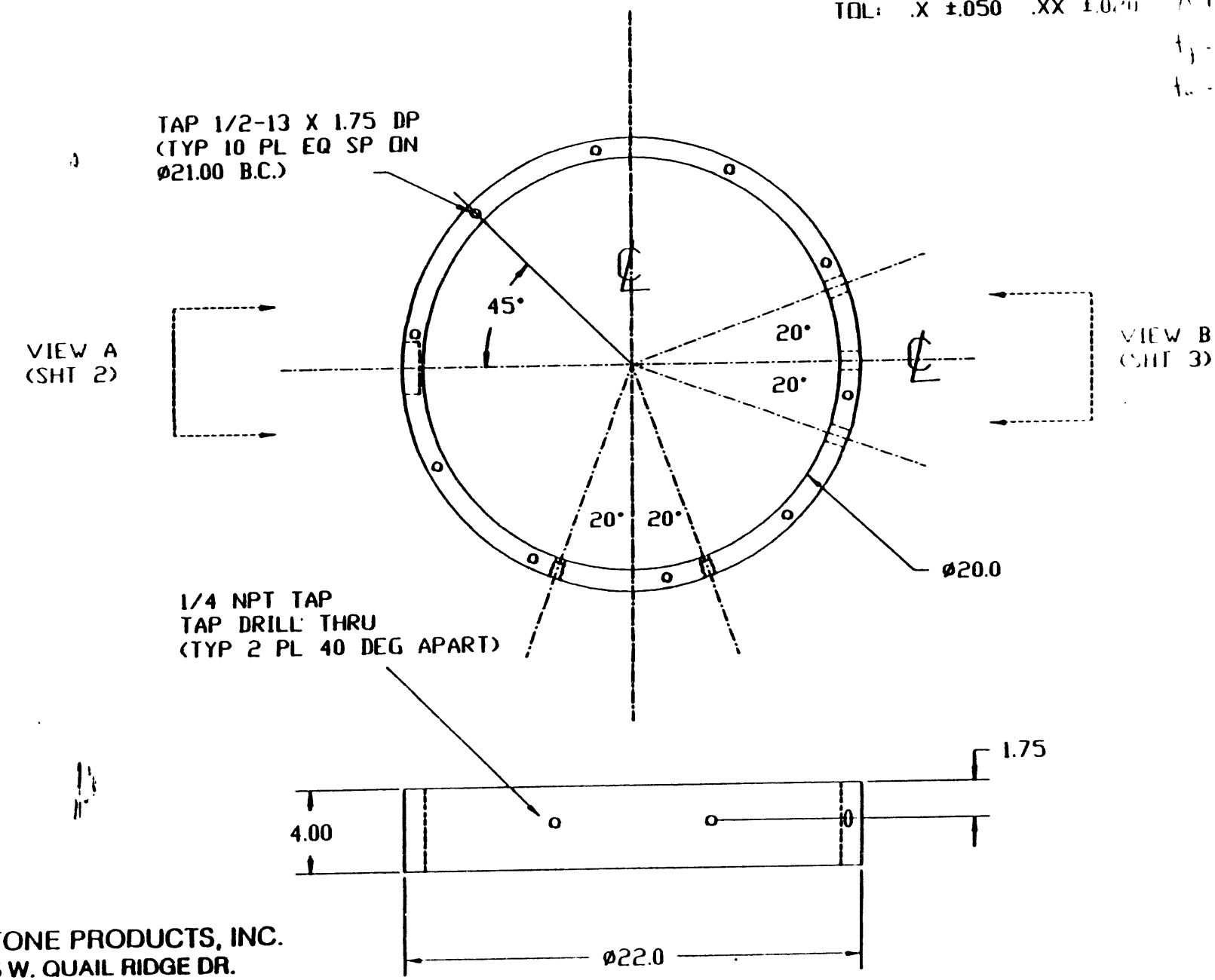



CRESTONE PRODUCTS, INC.
4175 W. QUAIL RIDGE DR.
BOISE, ID 83703
TEL 208-368-7998
FAX 208-368-7999

# 42-5 MANIFOLD TUBE
(SHEET 2 OF 3)

CRESTONE PRODUCTS, INC.
4175 W. QUAIL RIDGE DR.
BOISE, ID 83703
TEL 208-368-7998
FAX 208-368-7999

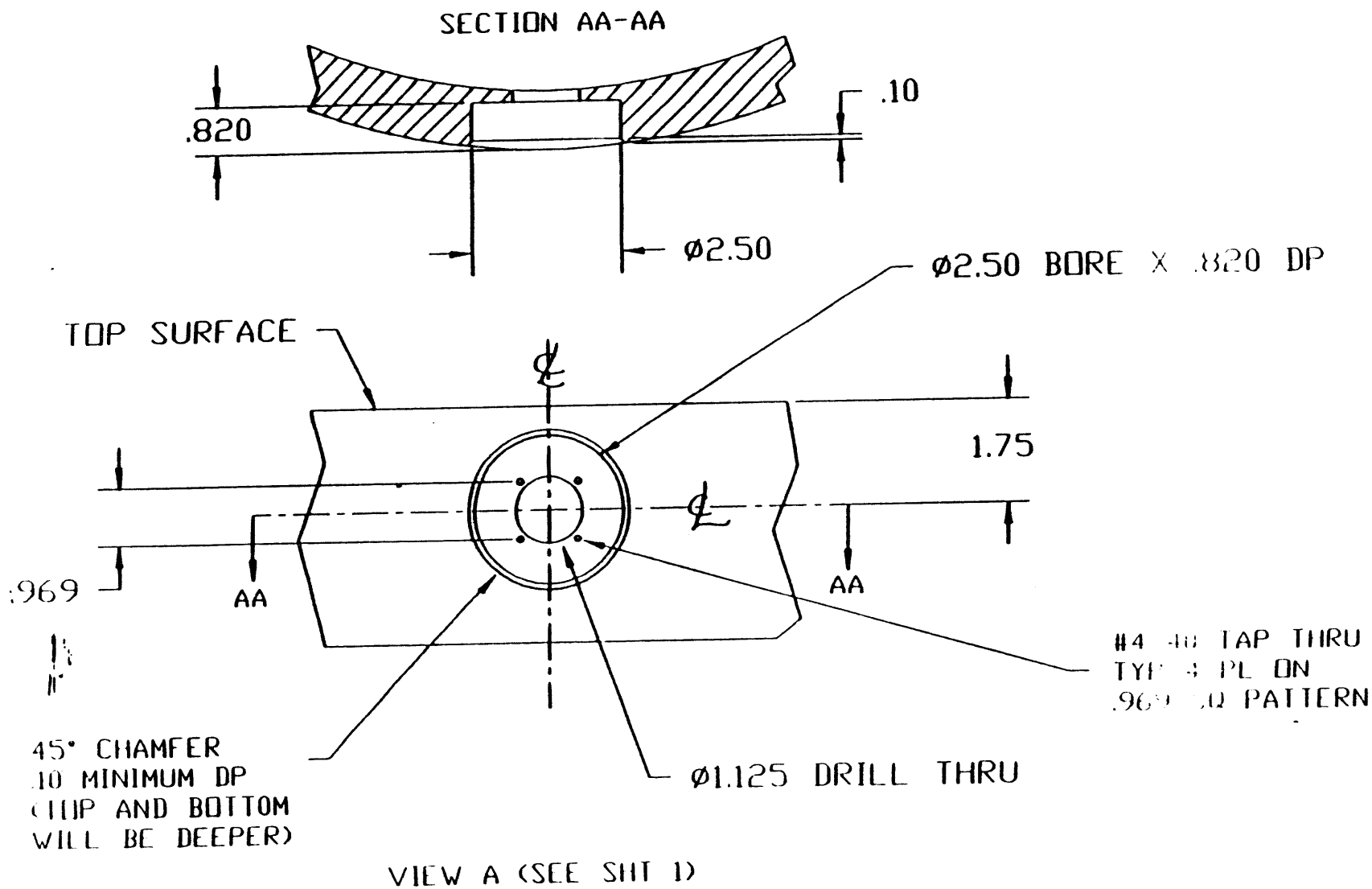

# 42-5 MANIFOLD TUBE
(SHEET 2 OF 3)

LIGHT CONNECTOR MACHINING
(TYP 3 PL 20 DEG APART)

SECTION BB-BB

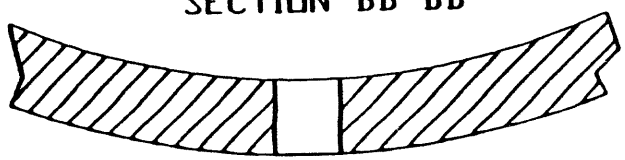

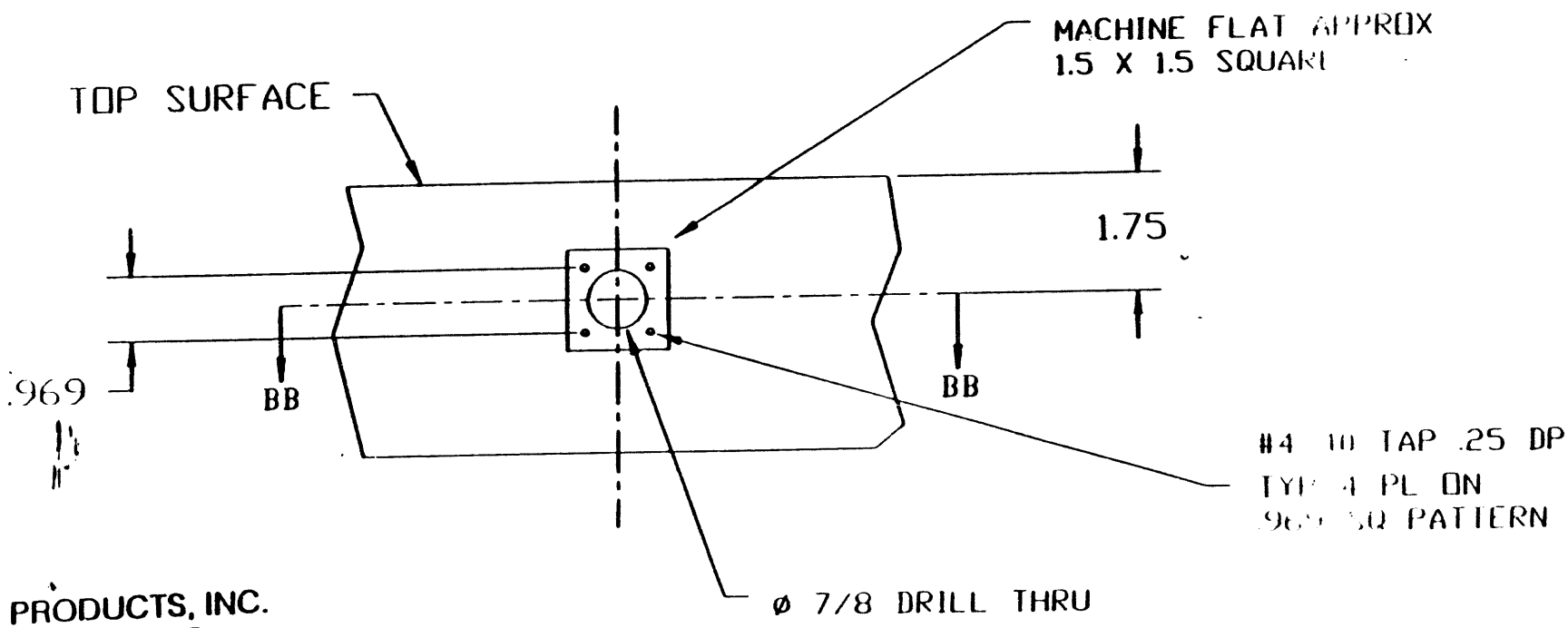



CRESTONE PRODUCTS, INC.
4175 W. QUAIL RIDGE DR.
BOISE, ID 83703
TEL 208-368-7998
FAX 208-368-7999


VIEW B (SEE SHT 1)

# 42-6 DIVIDING PLATE

MATL: 300 SERIES SS

TOL: .XX ±.020 .X ±.050

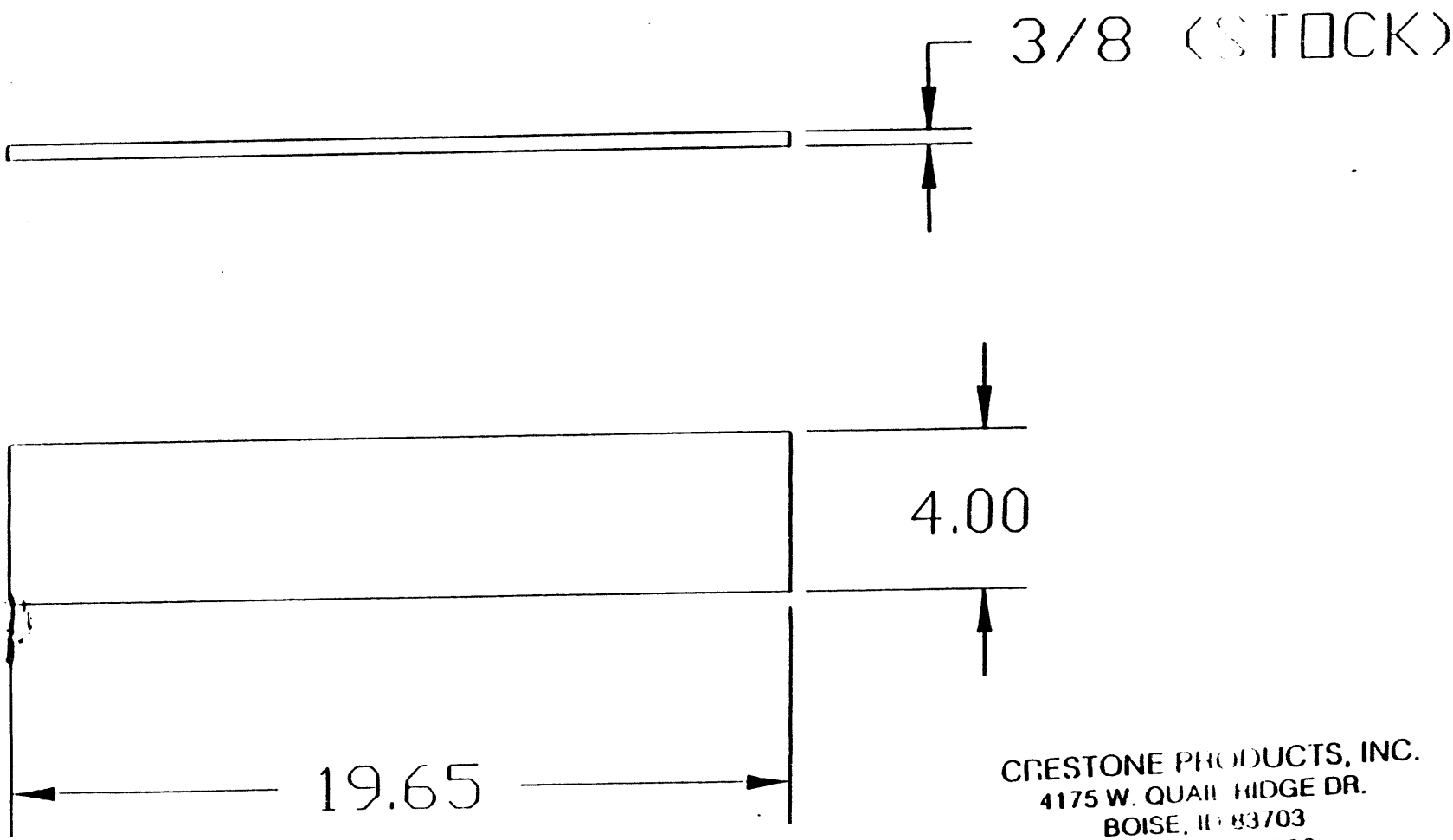


CRESTONE PRODUCTS, INC.
4175 W. QUAIL RIDGE DR.
BOISE, ID 83703
TEL 208 368 7998
FAX 208 368 7999

# 42-7 FLANGE PLATE

MATL: ~~300~~ 304 SERIES SS ASTM A240

TOL: .XX ±.020 .X ±.050

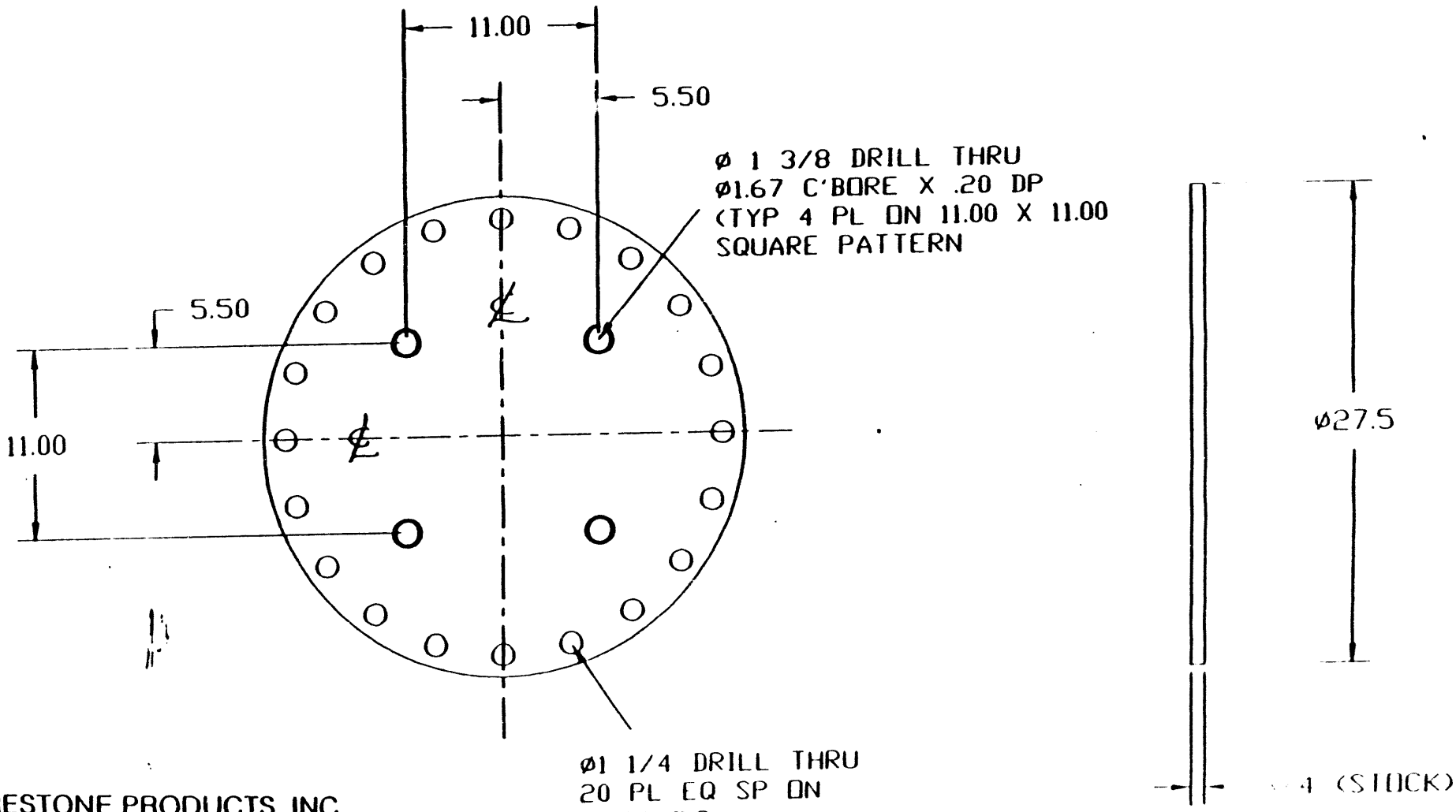



CRESTONE PRODUCTS, INC.
4175 W. QUAIL RIDGE DR.
BOISE, ID 83703
TEL 208-368-7998
FAX 208 368-7999

42-8 1 1/4 IPS UPPER PIPE

MATL: 1 1/4 IPS SCH 40
304 SS PIPE
1.66 O.D. X 1.38 I.D.

TOL: .XX ±.020 .X ±.050

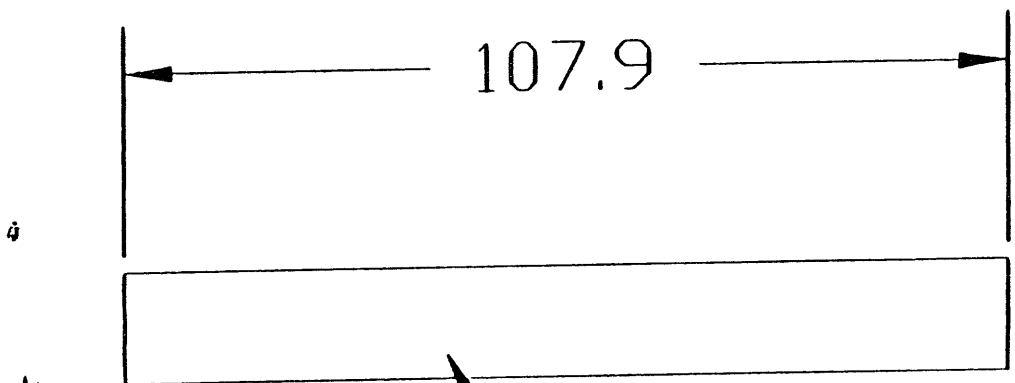


1 1/4 IPS SCH 40 SS PIPE
(STOCK)

CRESTONE PRODUCTS, INC.
4175 W. QUAIL RIDGE DR.
BOISE, ID 83703
TEL 208-368-7998
FAX 208-368-7999

# 42-9 PIPE WELDING DETAIL

CRESTONE PRODUCTS, INC.
4175 W. QUAIL RIDGE DR.
BOISE, ID 83703
TEL 208-368-7998
FAX 208-368-7999

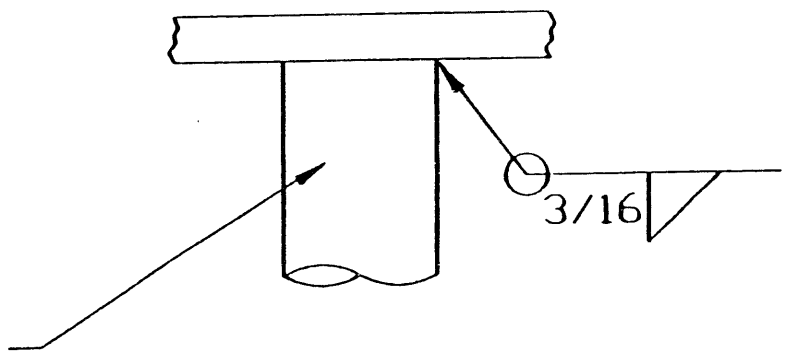


1 1/4 IPS SCH 40
PIPES (DWG 40-11)

FIT PIPES INTO PILOT SOCKETS IN FLANGE PLATE (42 ) AND MATING PLATE (40-3). TUBES MUST BE PERPENDICULAR TO PLATES. WELD ALL AROUND EACH PIPE. MUST BE LEAK TIGHT. (TYP FOUR PIPES EACH END)





A 12

# 42-10 CROSS BRACE DETAIL (D)

CRESTONE PRODUCTS, INC.
4175 W. QUAIL RIDGE DR.
BOISE, ID 83703
TEL 208-368-7998
FAX 208-368-7999

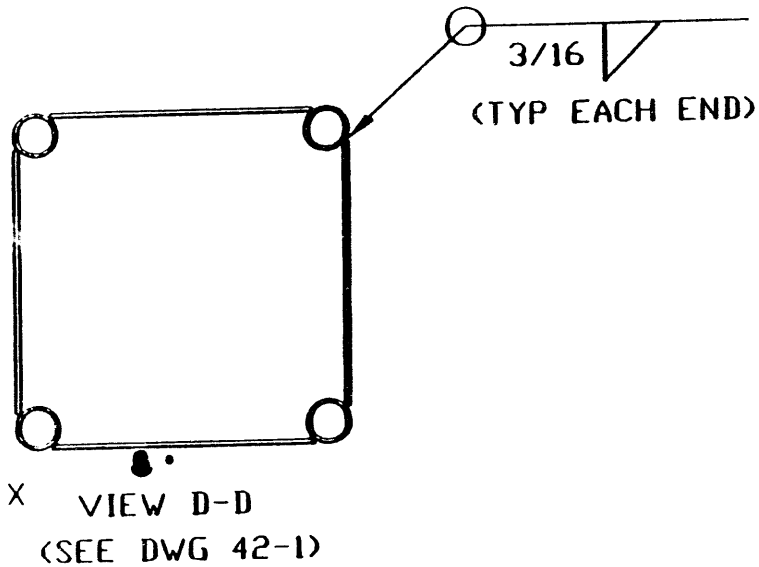


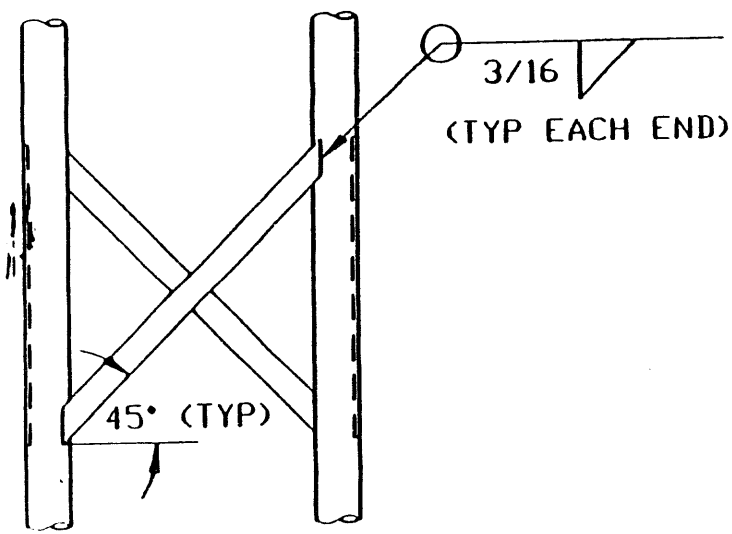


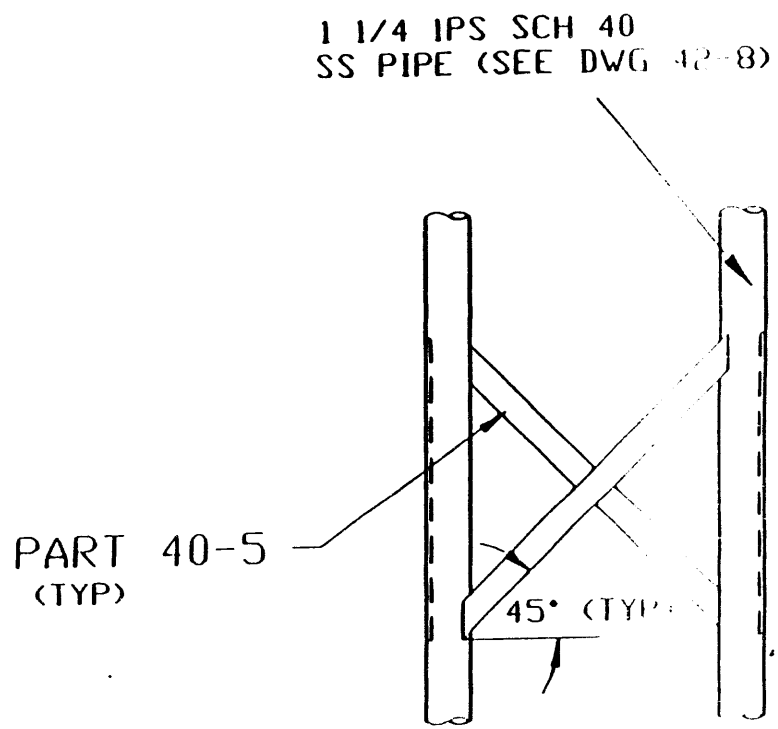

# 42-11 FLANGE PLATE GASKET

MATL: 1/8 THICK GARLOCK 3000 GASKET MATERIAL (OR EQUIVALENT)

TOL: .XX ±.020 .X ±.050

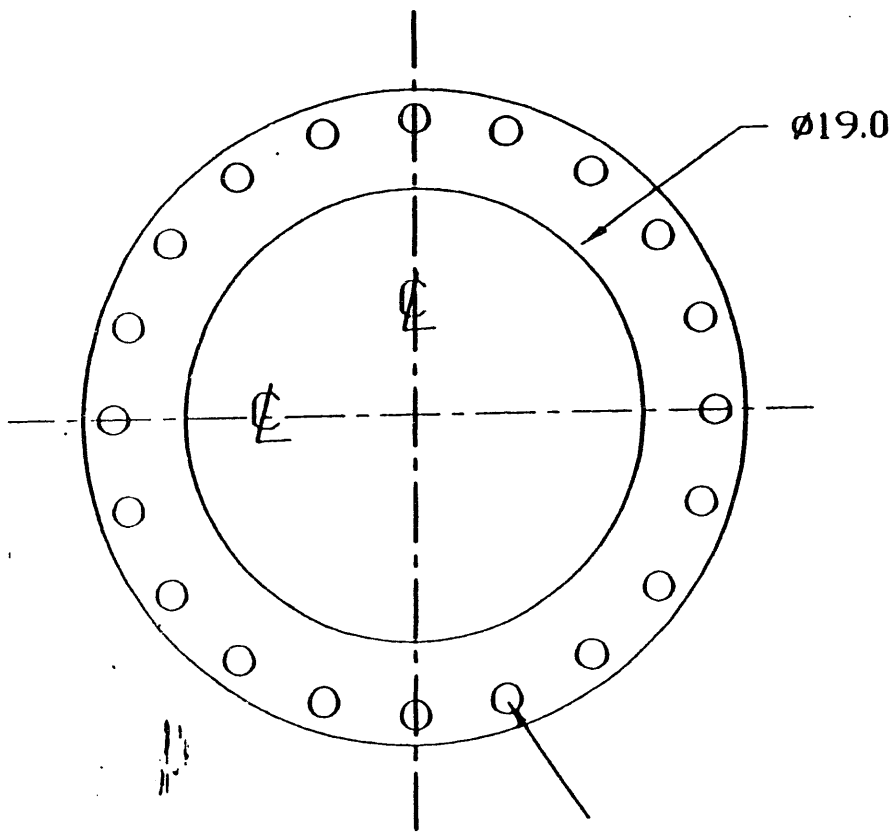


Ø1 1/4 HOLE THRU
20 PL EQ SP ON
Ø25.0 B.C.

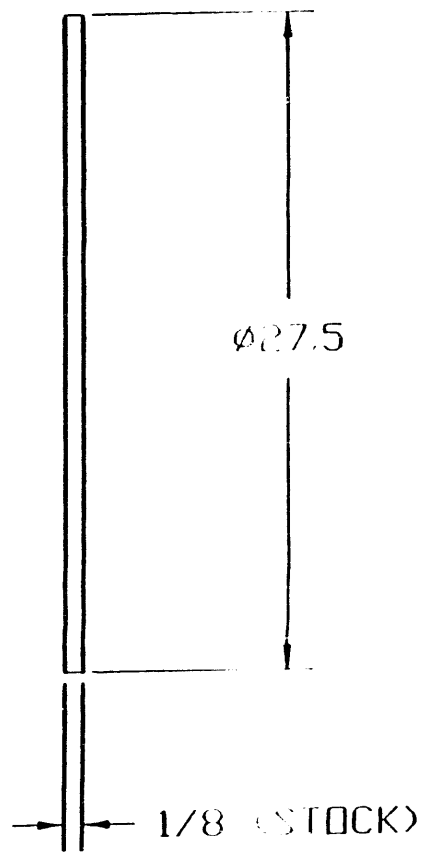



CRESTONE PRODUCTS, INC.
4175 W. QUAIL RIDGE DR.
BOISE, ID 83703
TEL 208-368-7998
FAX 208-368-7999






14

# 42-12 MATING PLATE GASKET

MATL: 1/8 THICK GARLOCK 3000 GASKET MATERIAL (OR EQUIVALENT)

TOL: .XX ±.020 .X ±.050

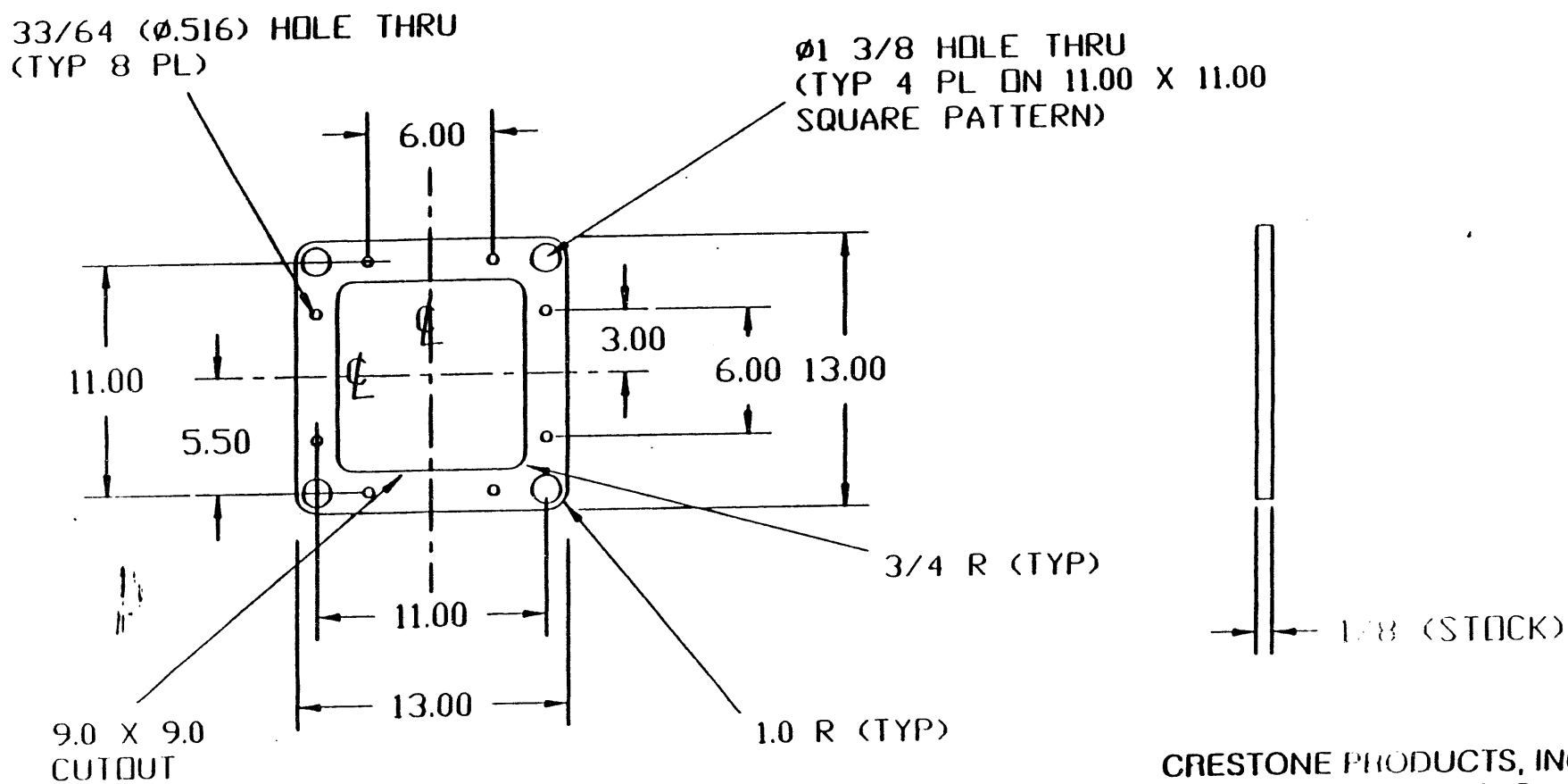



CRESTONE PRODUCTS, INC.
4175 W. QUAIL RIDGE DR.
BOISE, ID 83703
TEL 208-368-7998
FAX 208-368-7999

# 40-3 MATING PLATE

MATL: 1/2 THICK ~~300~~ 304 SERIES STAINLESS ASTM A240

TOL: .XX ±.020 .XXX ±.010

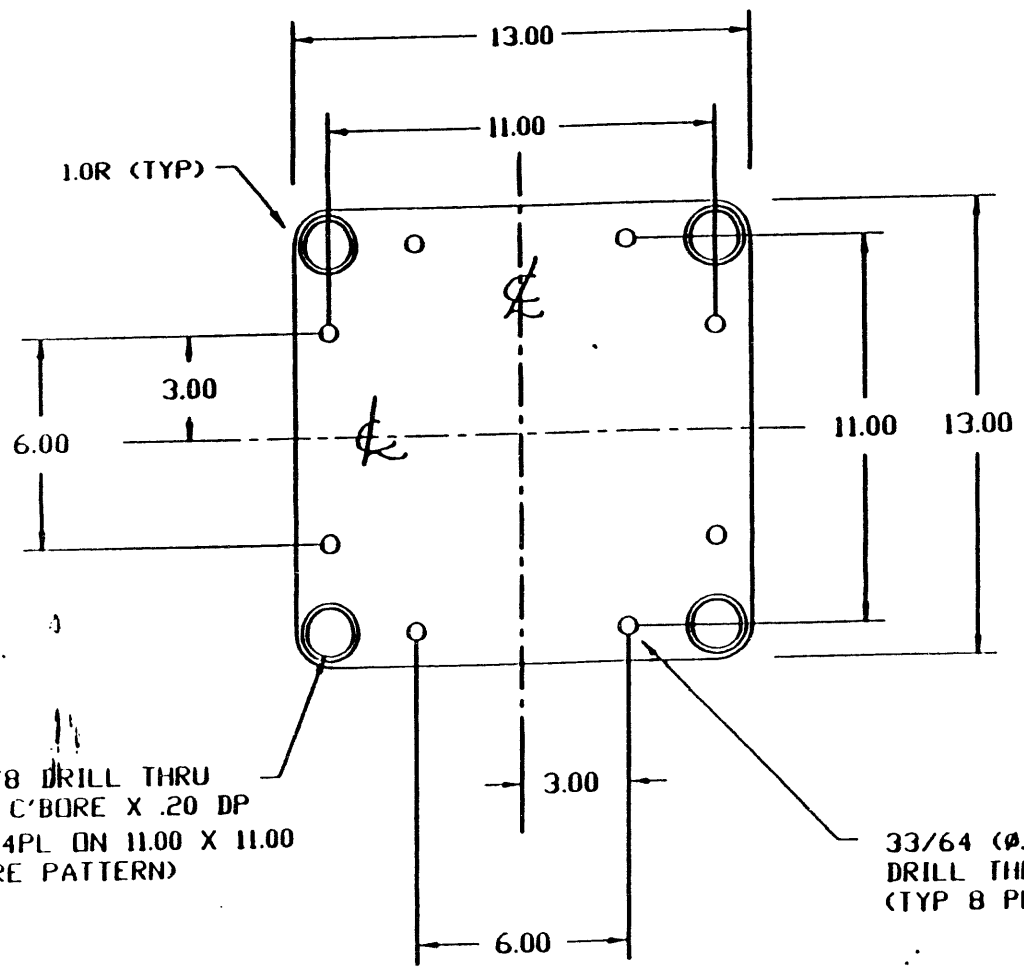


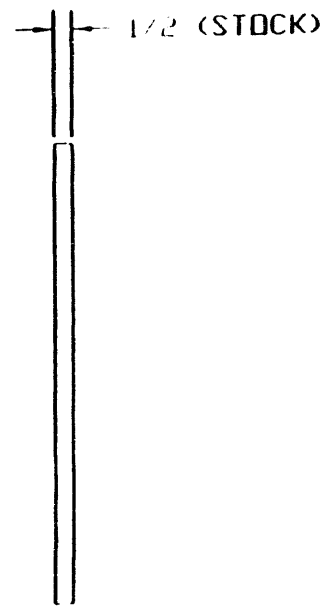



CRESTONE PRODUCTS, INC.
4175 W. QUAIL RIDGE DR.
BOISE, ID 83703
TEL 208-368-7998
FAX 208-368-7999

CRESTONE
PRODUCTS INC.

CONSULTANTS
Correspondence
Budget/Contract
Copies to:

# LOWER MAST

| DESCRIPTION | | QTY PER ASSEMBLY |
|---|---|---|
| 40-1 | LOWER MAST ASSEMBLY | |
| 40-2 | BOTTOM PLATE | 1 |
| 40-3 | MATING PLATE | 1 |
| 40-4 | LIGHT SUPPORT | 3 |
| 40-5 | CROSS BRACE | 4 |
| 40-6 | GAS TUBE DETAIL (A) | |
| 40-7 | LIGHT FITTING DETAIL (B) | |
| 40-8 | CROSS BRACE DETAIL (D) | |
| 40-9 | PIPE WELDING DETAIL | |
| 40-10 | 1/2 NPT NIPPLE MODS | 6 |
| 40-11 | 1 1/4 IPS LOWER PIPES | 1 SET OF 4 |
| 40-12 | 3/8 IPS GAS PIPE | 2 |
| 40-13 | FITTING | 2 |
| 40-14 | FITTING GASKET | 2 |



4175 W. Quail Ridge Dr. · Boise, Idaho 83703
Tel (208) 368-7998 · Fax (208) 368-7999

CRESTONE PRODUCTS,
4175 W. QUAIL RIDGE DR.
BOISE, ID 83703
TEL 208-368-7998
FAX 208-368-7999

# 40-1 LOWER MAST ASSEMBLY

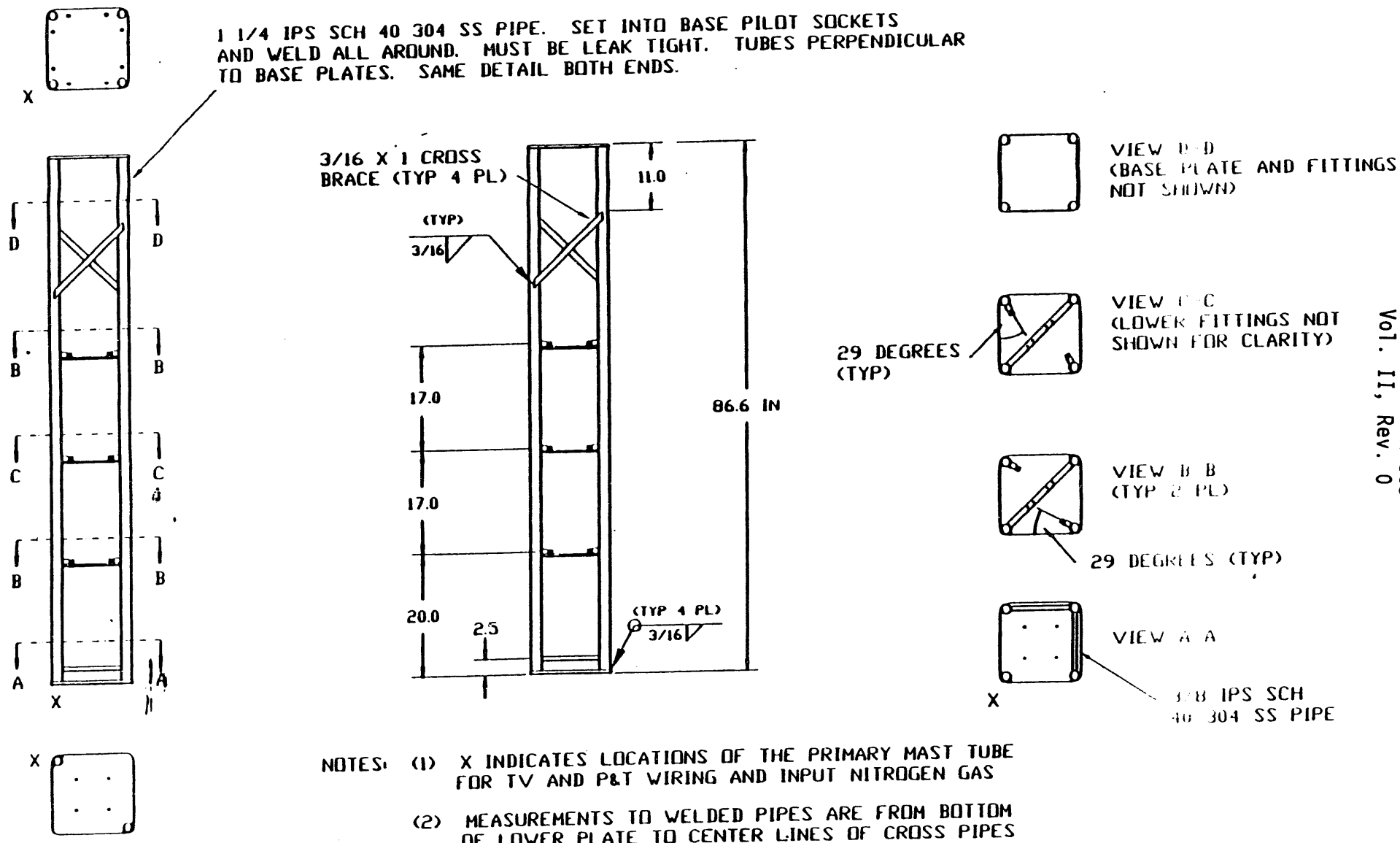


NOTES: (1) X INDICATES LOCATIONS OF THE PRIMARY MAST TUBE FOR TV AND P&T WIRING AND INPUT NITROGEN GAS

(2) MEASUREMENTS TO WELDED PIPES ARE FROM BOTTOM OF LOWER PLATE TO CENTER LINES OF CROSS PIPES AND BETWEEN CENTERS OF CROSS PIPES

# 40-2 BOTTOM PLATE

MATL: 1/2 THICK ~~300~~ 304 SERIES STAINLESS

TOL: .XX ±.020 .XXX ±.010

A-1M A-40
$f_y$ = 35 ksi
$f_u$ = 85 ksi

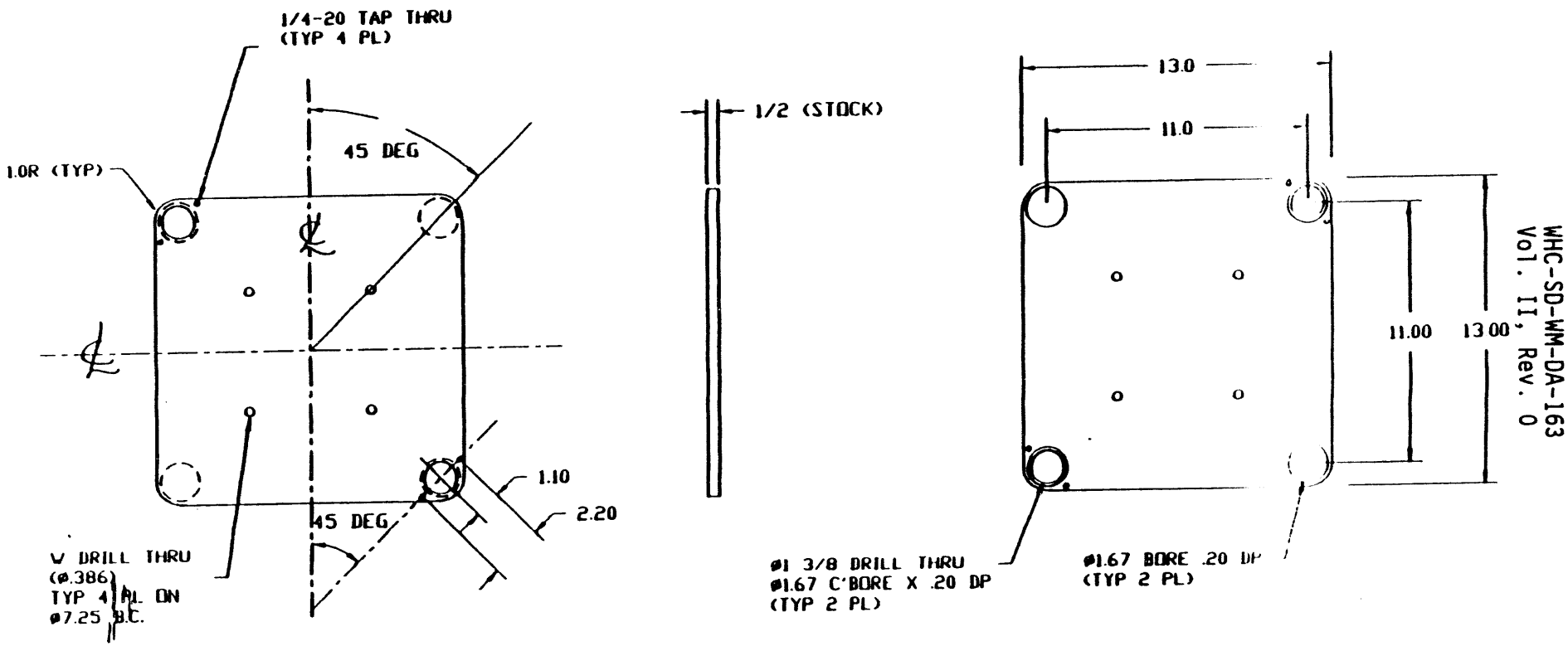



CRESTONE PRODUCTS, INC.
4175 W. QUAIL RIDGE DR.
BOISE, ID 83703
TEL 208-368-7998
FAX 208-368-7999

# 40-3 MATING PLATE

MATL: 1/2 THICK ~~300~~ 304 SERIES STAINLESS

TOL: .XX ±.020 .XXX ±.010 A 1/1 A 240

$f_y$ = 35 ksi

$f_u$ = 85 ksi

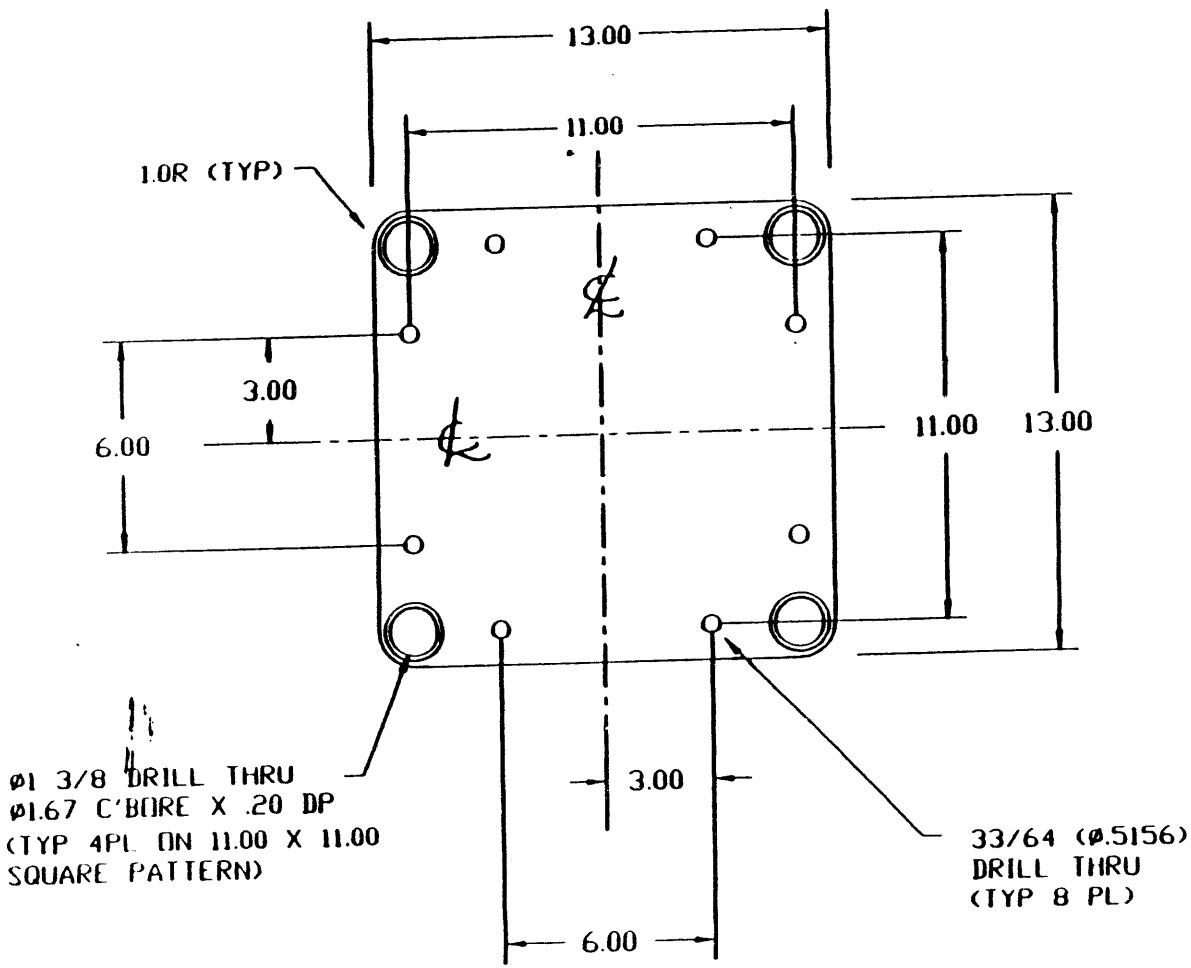


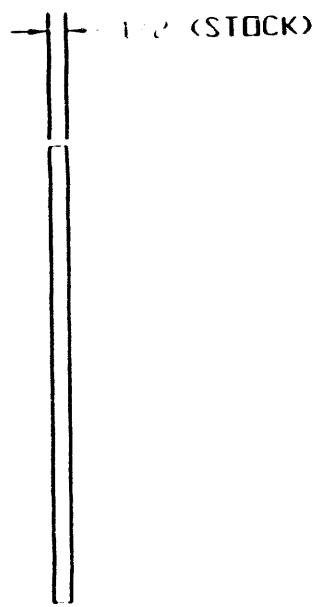



CRESTONE PRODUCTS, INC.
4175 W. QUAIL RIDGE DR.
BOISE, ID 83703
TEL 208-368-7998
FAX 208-368-7999

# 40-4 LIGHT SUPPORT

MATL: 3/8 X 1 300 SERIES SS FLAT

TOL: .XX ±.020 .XXX ±.010

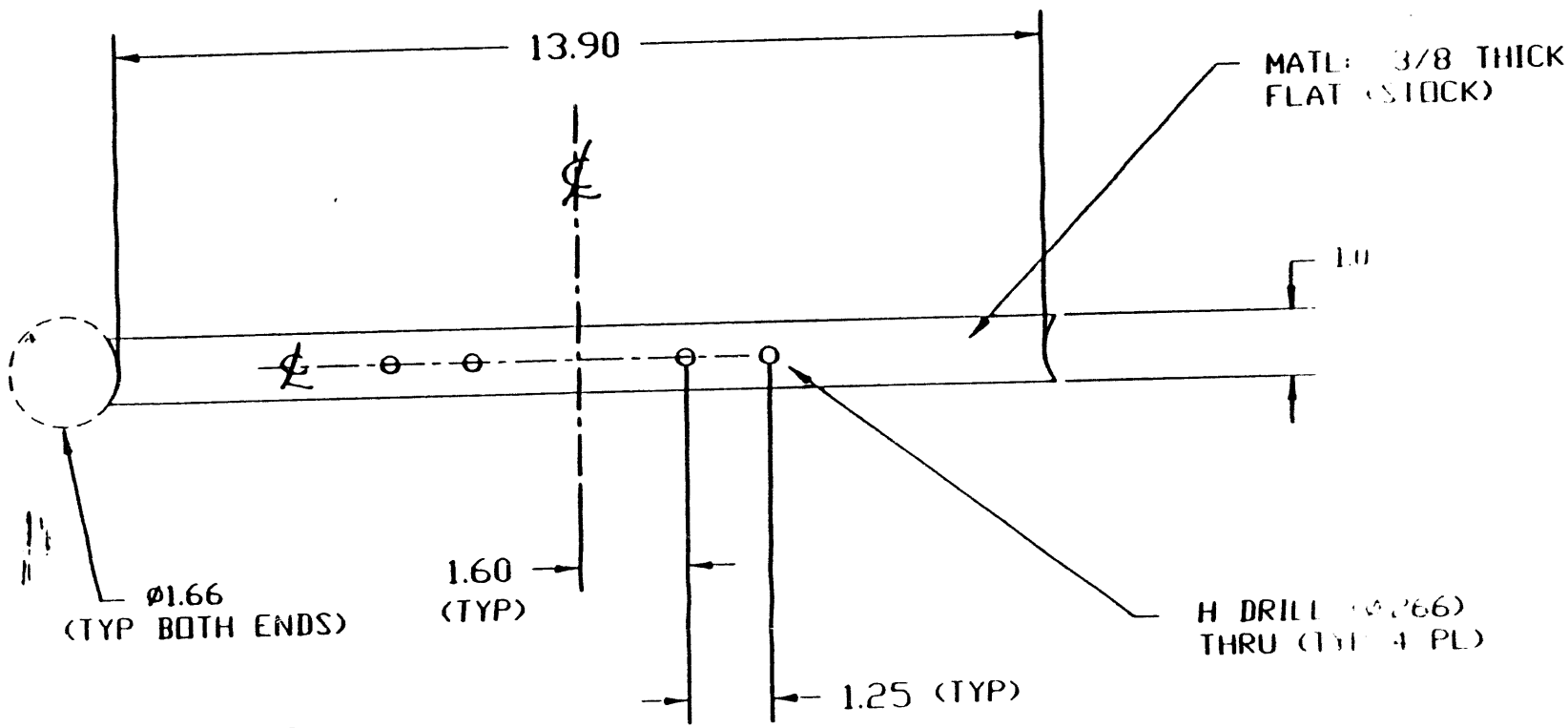



CRESTONE PRODUCTS, INC.
4175 W. QUAIL RIDGE DR.
BOISE, ID 83703
TEL 208-368-7998
FAX 208-368-7999

# 40-5 CROSS BRACE

MATL: 3/16 X 1 300 SERIES SS FLAT

TOL: .XX ±.020 .XXX ±.010

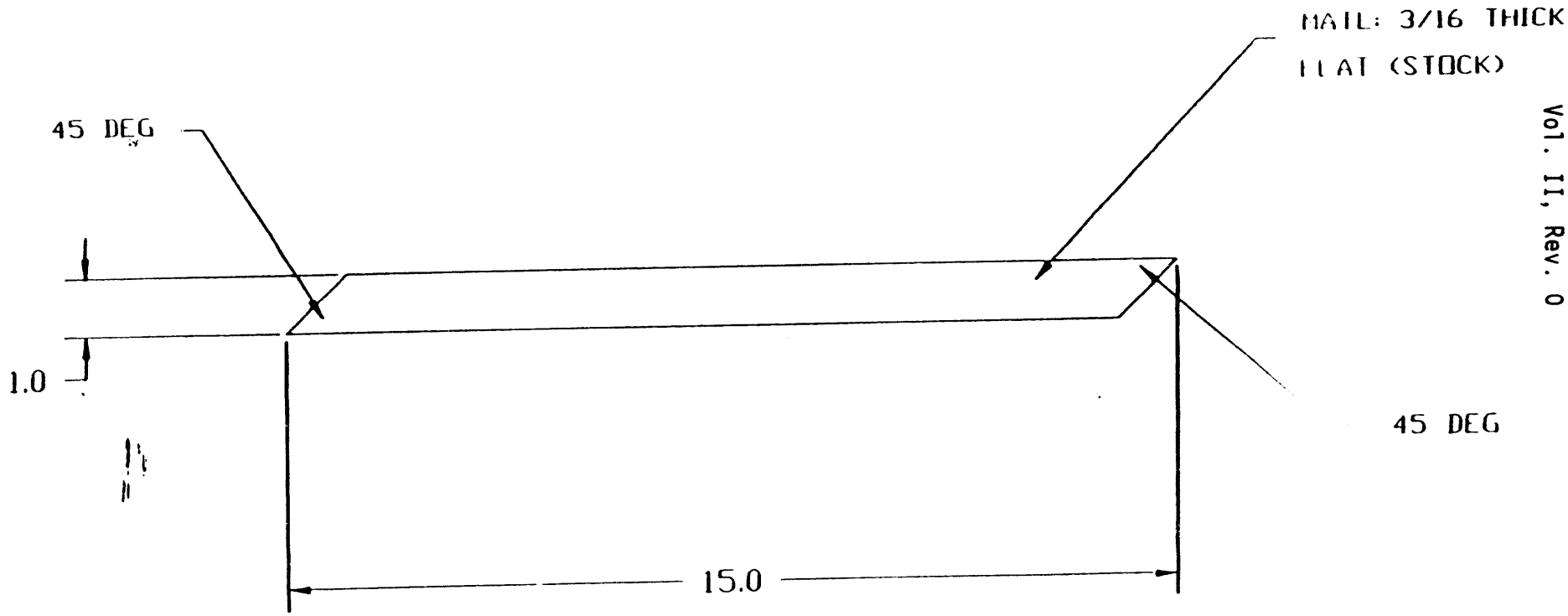


CRESTONE PRODUCTS, INC.
4175 W. QUAIL RIDGE DR.
BOISE, ID 83703
TEL 208 368-7998
FAX 208 368-7999

CRESTONE PRODUCTS, INC.
4175 W. QUAIL RIDGE DR.
BOISE, ID 83703
TEL 208-368-7998
FAX 208-368-7999

# 40-6 GAS TUBE DETAIL (A)

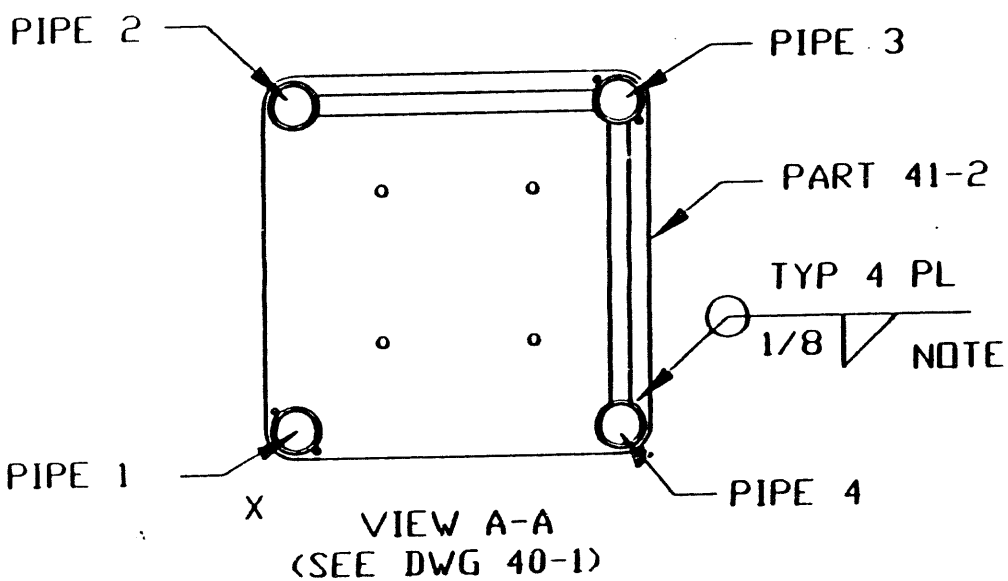


NOTE: CENTER PIPES OVER HOLES IN 1 1/4 PIPES AND WELD IN POSITION

NOTE: WELDS MUST BE LEAK TIGHT

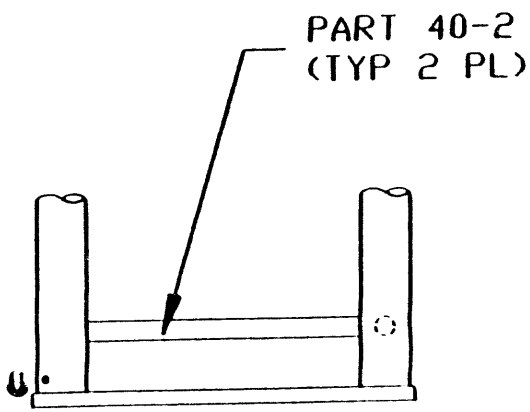


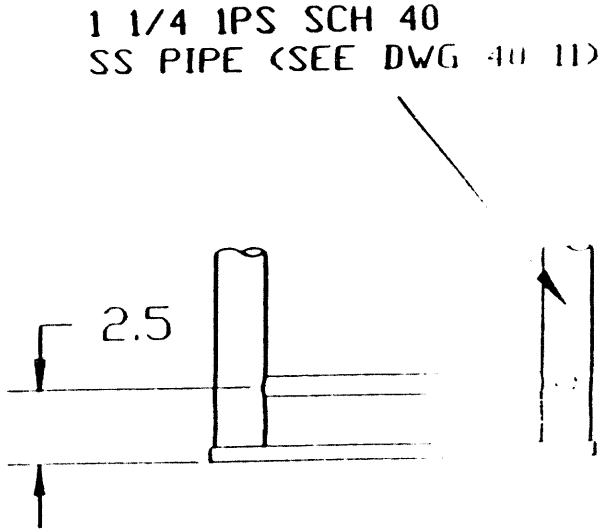

CRESTONE PRODUCTS, INC.
4175 W. QUAIL RIDGE DR.
BOISE, ID 83703
TEL 208-368-7998
FAX 208-368-7999

# 40-7 LIGHT FITTING DETAIL (B)

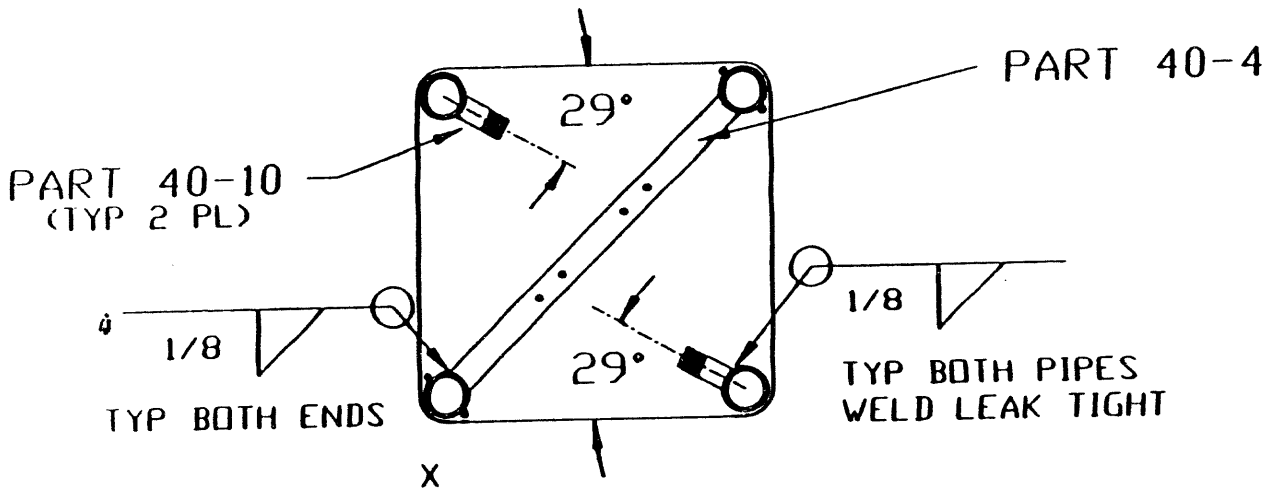


VIEW B-B
(SEE DWG 40-1)

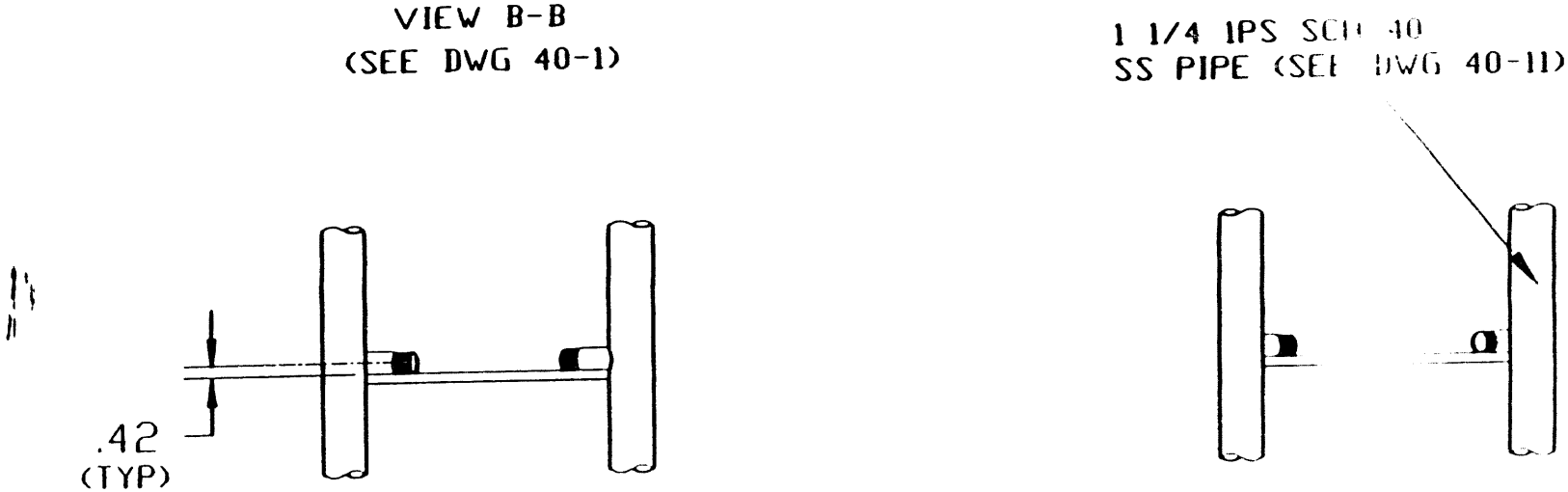


DIMENSION FROM TOP OF LIGHT SUPPORT (40-4)
TO CENTERLINE OF STUB PIPES (40-10)





A 24

# 40-8 CROSS BRACE DETAIL (D)

CRESTONE PRODUCTS, INC.
4175 W. QUAIL RIDGE DR.
BOISE, ID 83703
TEL 208-368-7998
FAX 208 368-7999

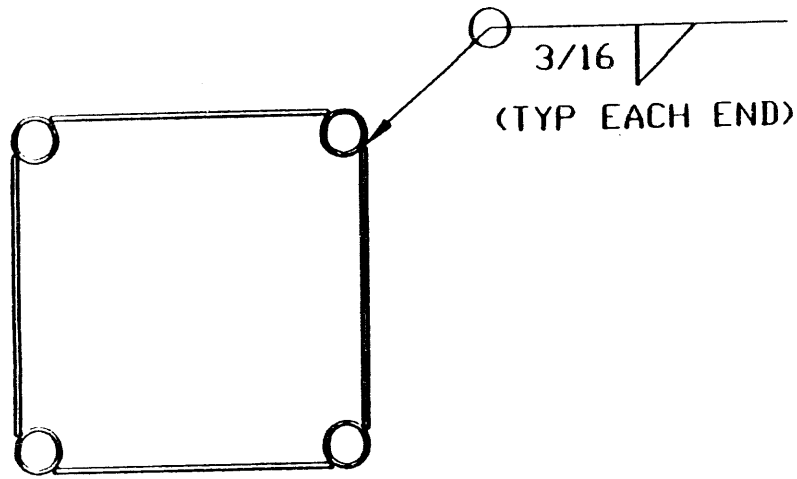


X VIEW D-D
(SEE DWG 40-1)

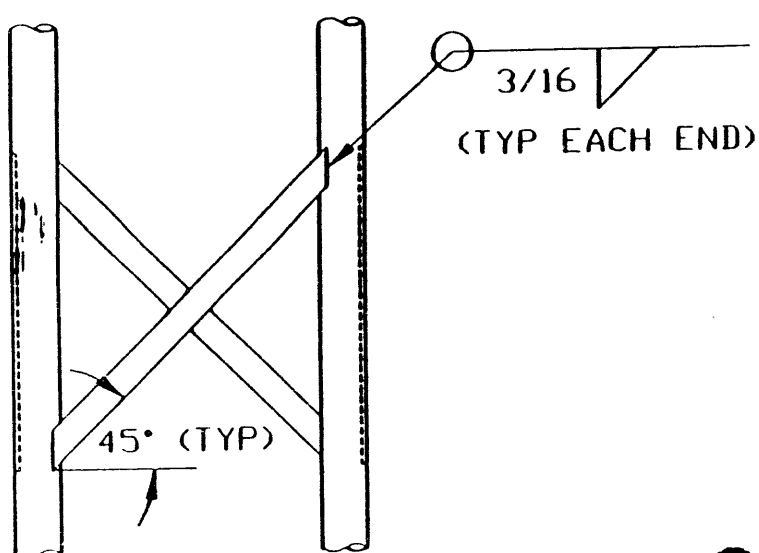


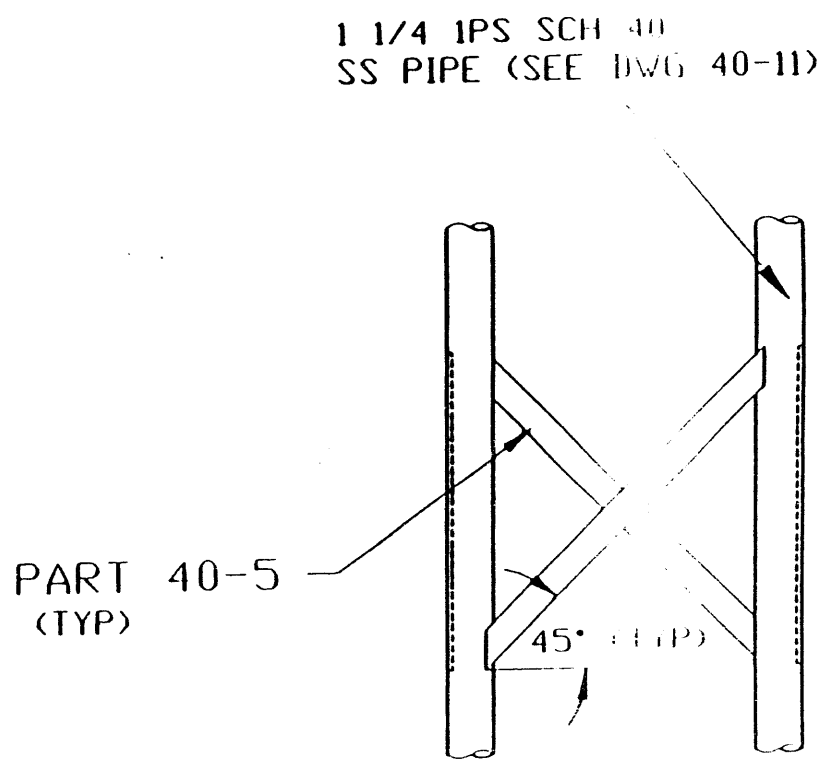

CRESTONE PRODUCTS, INC.
4175 W. QUAIL RIDGE DR.
BOISE, ID 83703
TEL 208-368-7998
FAX 208-368-7999

# 40-9 PIPE WELDING DETAIL

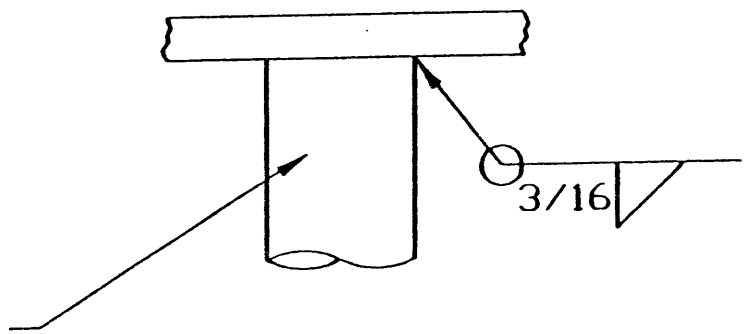


FIT PIPES INTO PILOT SOCKETS IN BOTTOM PLATE (40-2) AND MATING PLATE (40-3). TUBES MUST BE PERPENDICULAR TO PLATES. WELD ALL AROUND EACH PIPE. MUST BE LEAK TIGHT. (TYP FOUR PIPES EACH END)





A 26

40-10 1/2 NPT NIPPLE MODS

MATL: 1/2 NPT X 2 1/2 SS NIPPLE
1/2 IPS SCH 40 (SUPPLIED)

TOL: .XX ±.020 .XXX ±.010

CRESTONE PRODUCTS, INC.
4175 W. QUAIL RIDGE DR.
BOISE, ID 83703
TEL 208-368-7998
FAX 208-368-7999

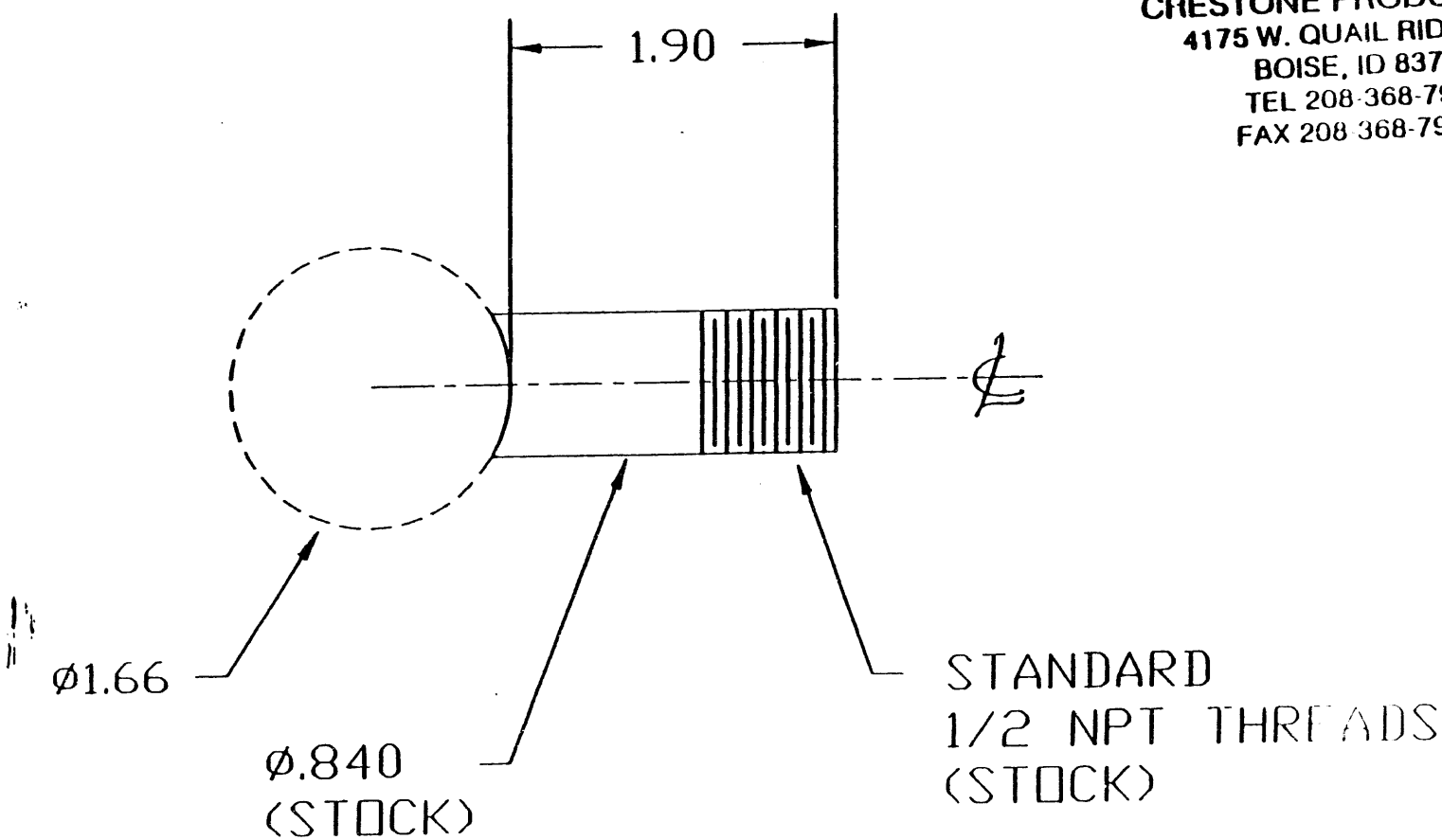






A 27

# 40-11 1 1/4 IPS LOWER PIPES

MATL: 1 1/4 IPS SCH 40 304 SS PIPE
1.66 OD X 1.38 ID

CRESTONE PRODUCTS, INC.
4175 W. QUAIL RIDGE DR.
BOISE, ID 83703
TEL 208-368-7998
FAX 208-368-7999

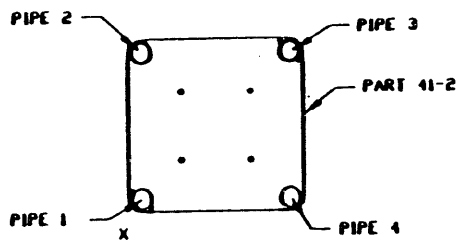


MAST TOP VIEW

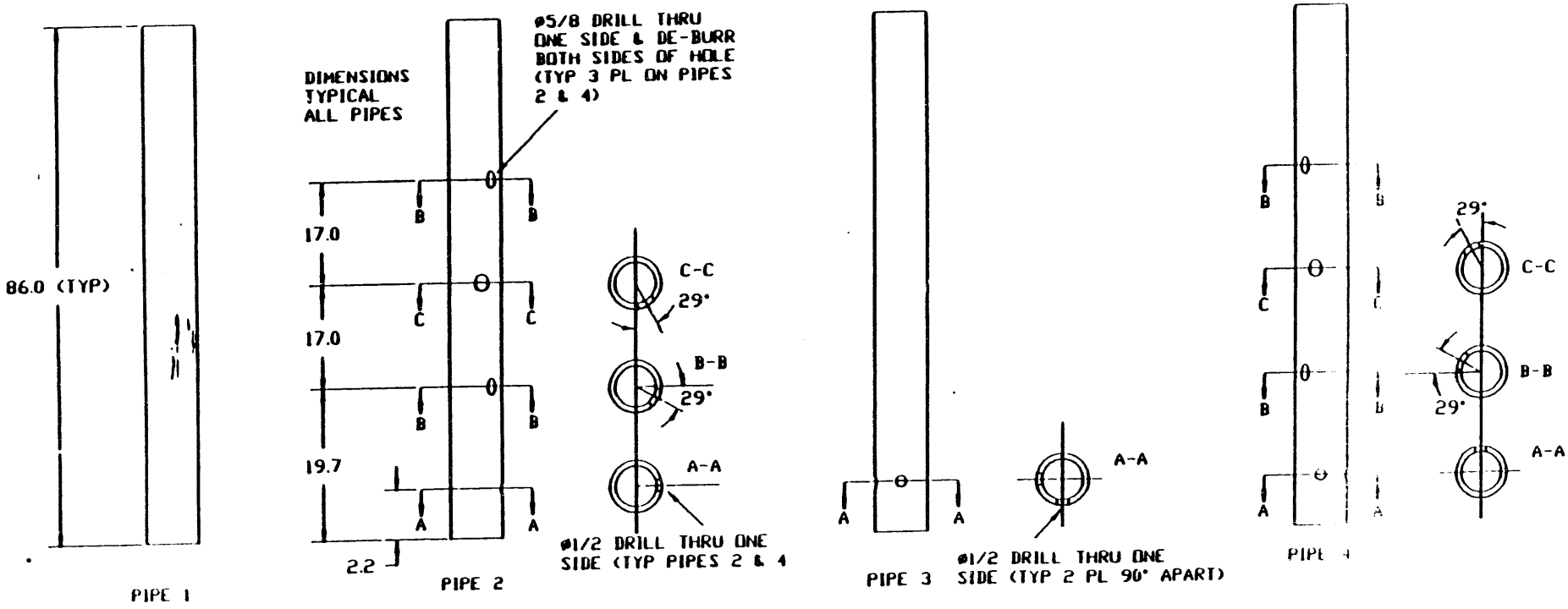






A 28

# 40-12 3/8 IPS GAS PIPE

MATL: 3/8 IPS SCH 40
304 SS PIPE

TOL: .XX ±.020 .XXX ±.010

NOTE: MACHINE BOTH ENDS TO FIT CONTOUR
OF Ø1.66 MAST PIPES

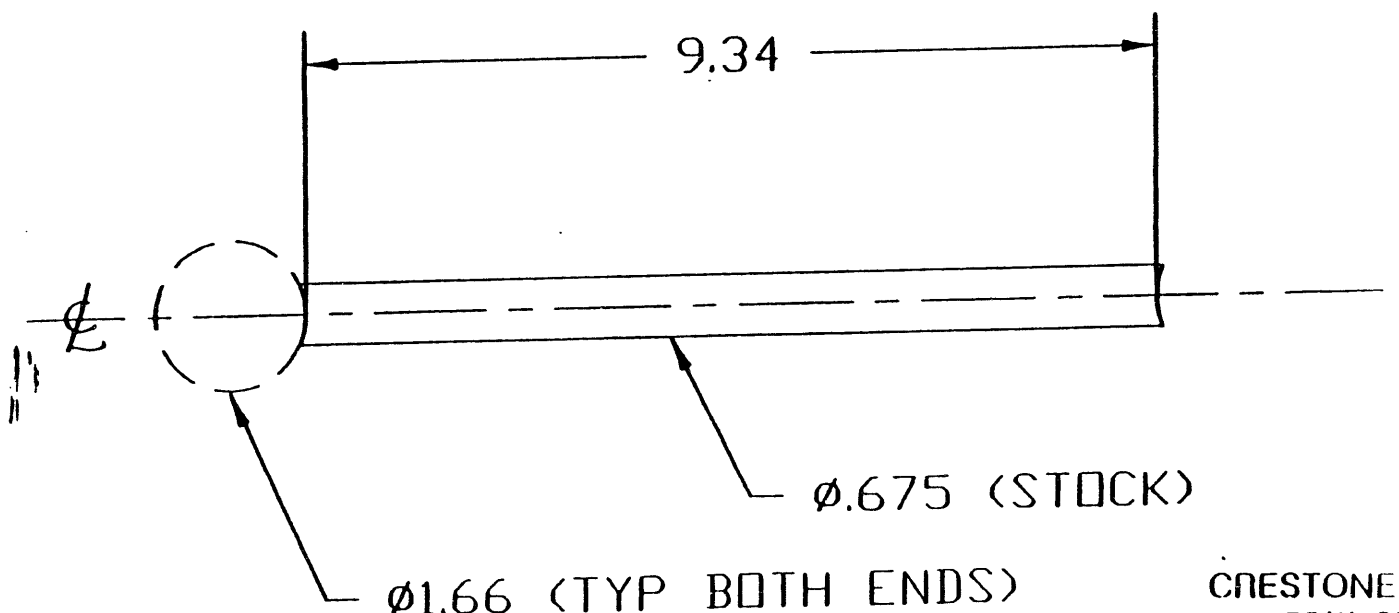


CRESTONE PRODUCTS, INC.
4175 W. QUAIL RIDGE DR.
BOISE, ID 83703
TEL 208-368-7998
FAX 208-368-7999

A 29

# 40-13 FITTING

MATL: 300 SERIES STAINLESS STEEL

TOL: .XX ±.020

CRESTONE PRODUCTS, INC.
4175 W. QUAIL RIDGE DR.
BOISE, ID 83703
TEL 208-368-7998
FAX 208-368-7999

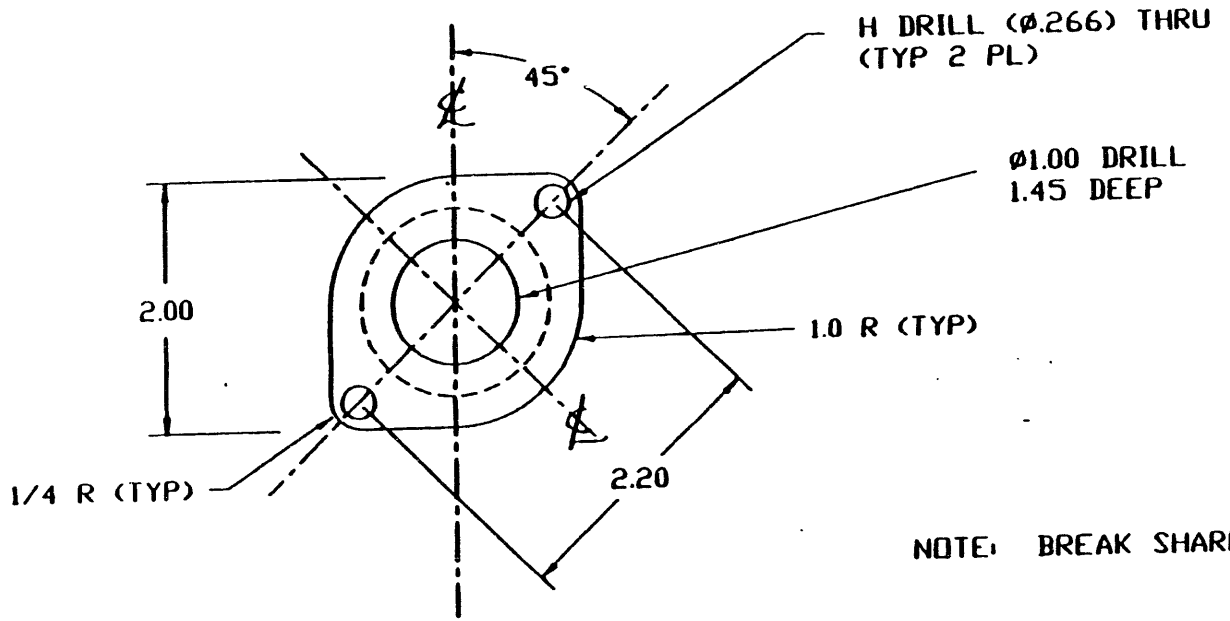


NOTE: BREAK SHARP CORNERS

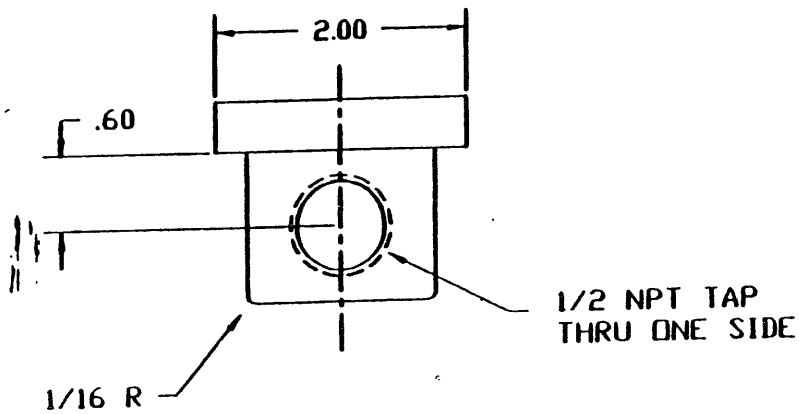


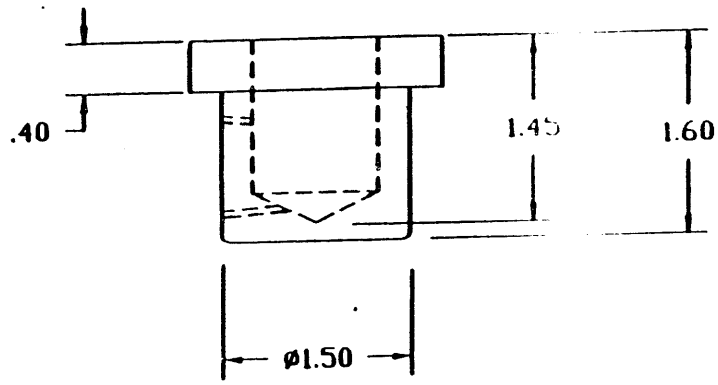






A 30

# 40-14 FITTING GASKET

MATL: 1/8 THICK GARLOCK 3000 GASKET MATERIAL (OR EQUIVALENT)

TOL: .XX ±.020

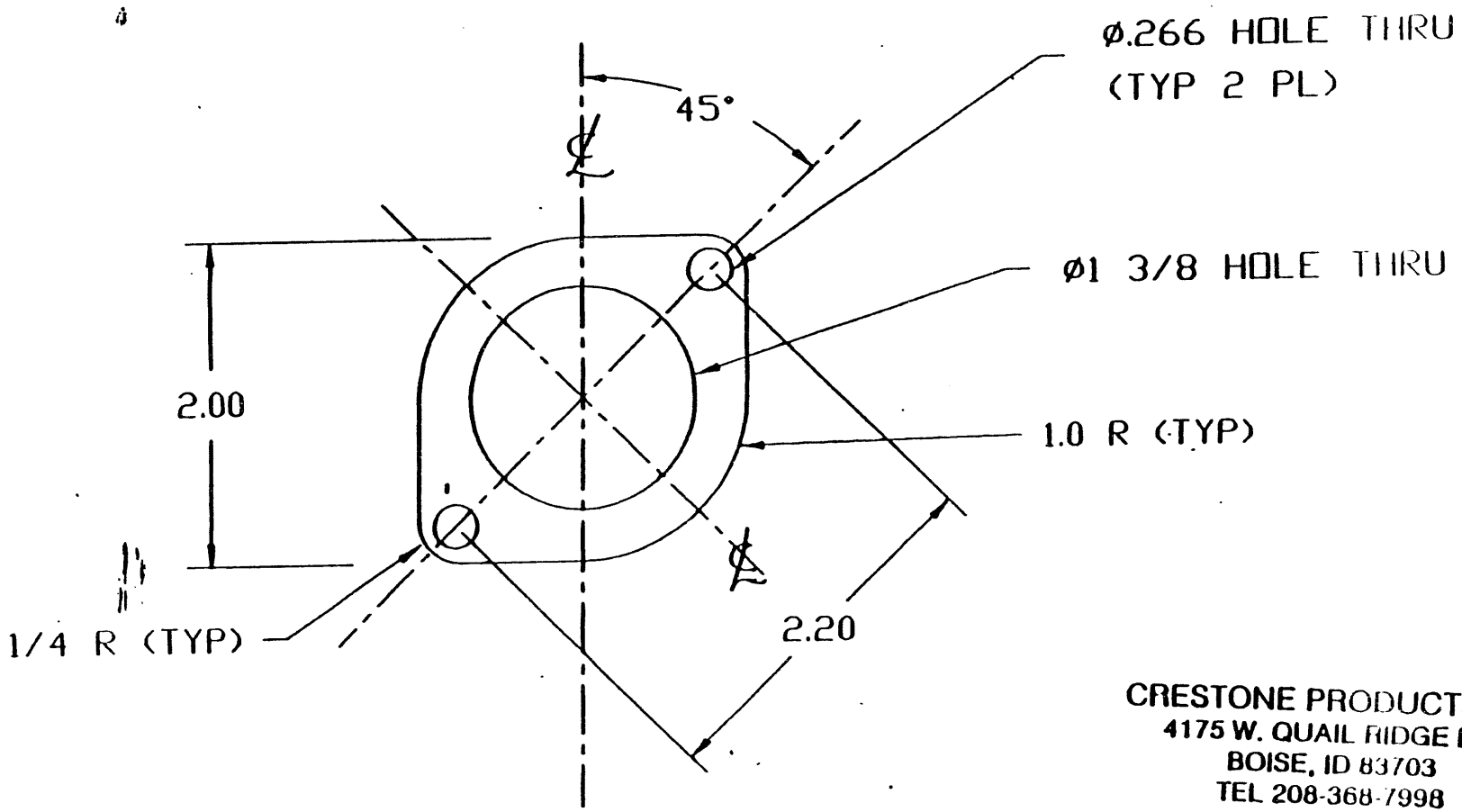



CRESTONE PRODUCTS, INC.
4175 W. QUAIL RIDGE DR.
BOISE, ID 83703
TEL 208-368-7998
FAX 208-368-7999

A 32

CRESTONE
PRODUCTS INC.

CONSULTANTS
JOB #
Copies to:

# CAMERA ROLL MECHANISM

| *DESCRIPTION* | | *QTY PER ASSEMBLY* |
|---|---|---|
| 41-1 | ROLL ASSEMBLY | |
| 41-2 | BEARING PLATE #1 | 2 |
| 41-3 | BEARING PLATE #2 | 2 |
| 41-4 | SIDE PLATE | 2 |
| 41-5 | END PIECE | 4 |
| 41-6 | CAMERA GEAR SPACER | 1 |
| 41-7 | P&T BACK RING | 1 |
| 41-8 | P&T OUTPUT SPACER | 1 |
| 41-9 | P&T SPACER #2 | 1 |
| 41-10 | DELRIN RING | 2 |
| 41-11 | SPROCKET | 2 |



4175 W. Quail Ridge Dr. · Boise, Idaho 83703
Tel (208) 368-7998 · Fax (208) 368-7999

# 41-1 ROLL ASSEMBLY

ESTONE PRODUCTS, INC.
4175 W. QUAIL RIDGE DR.
BOISE, ID 83703
TEL 208-368-7998
FAX 208-368-7999

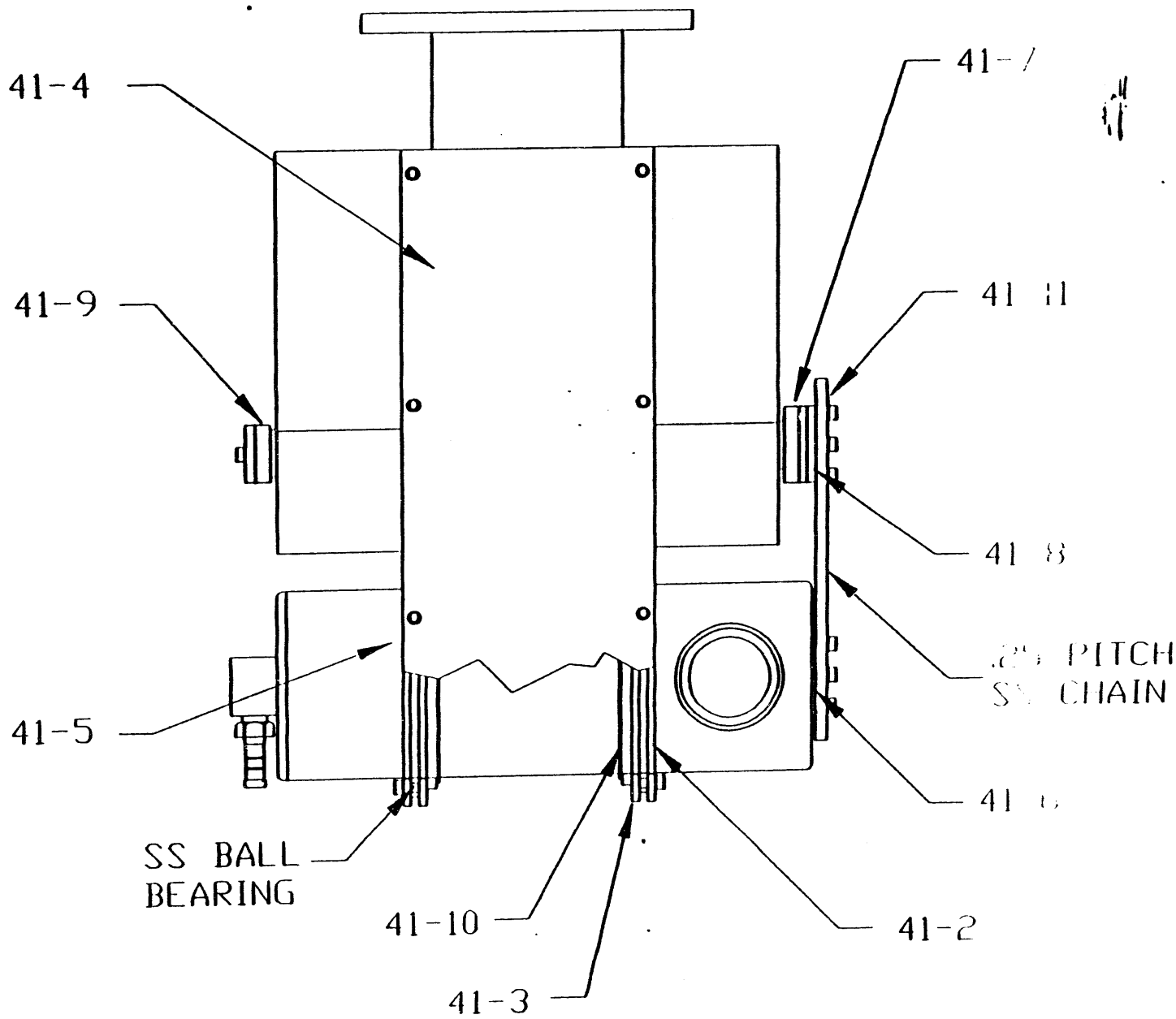

# 41-2 BEARING PLATE #1

MATL: ALUM 6061-T6
TOL: .XX ±.020 .XXX ±.010

CRESTONE PRODUCTS, INC.
4175 W. QUAIL RIDGE DR.
BOISE, ID 83703
TEL 208-368-7998
FAX 208-368-7999

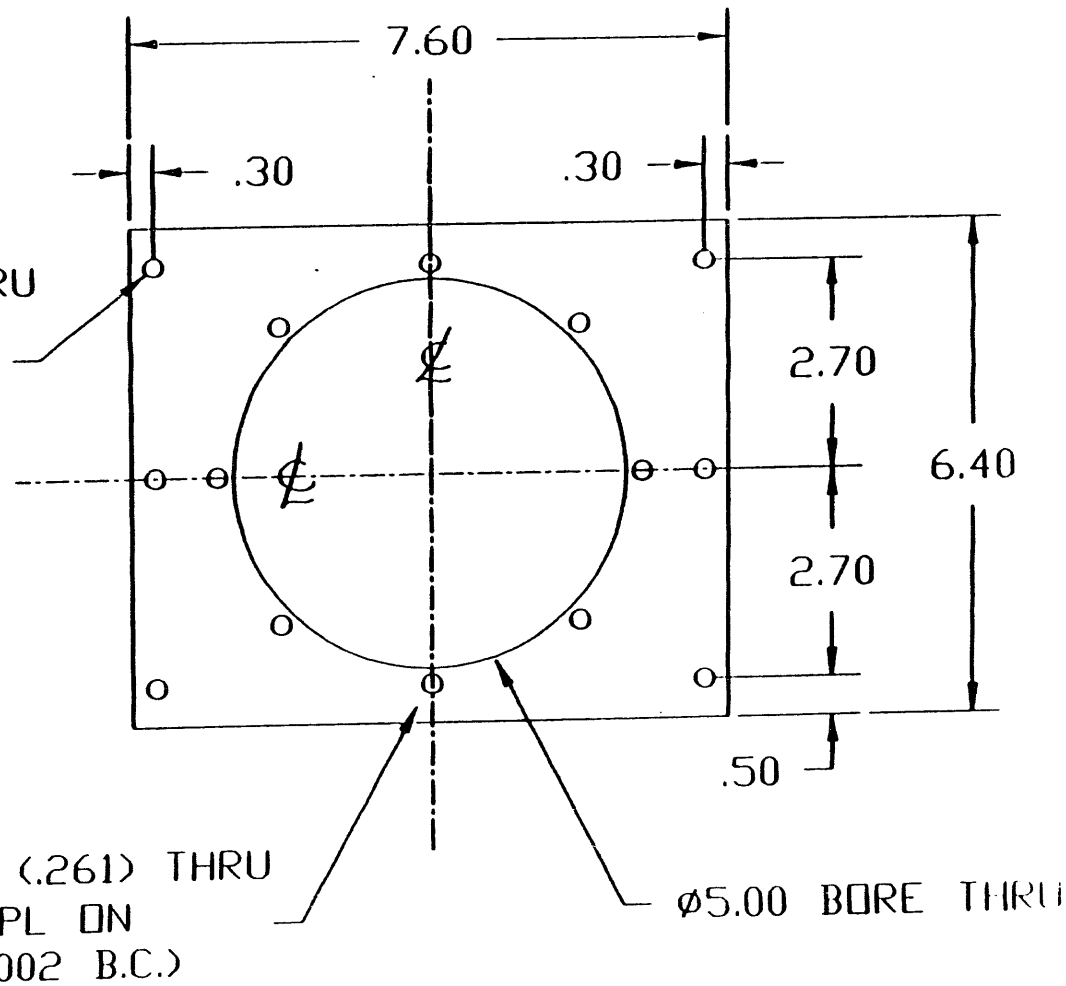


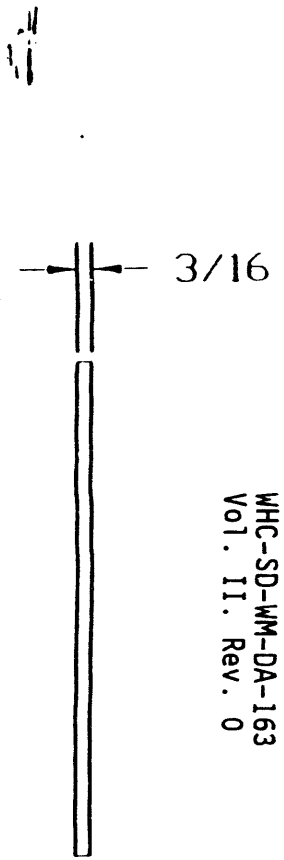

# 41-3 BEARING PLATE #2

MATL: ALUM 6061-T6
TOL: .XX ±.010 .XXX ±.010

**CRESTONE PRODUCTS, INC.**
**4175 W. QUAIL RIDGE DR.**
**BOISE, ID 83703**
**TEL 208-368-7998**
**FAX 208-368-7999**

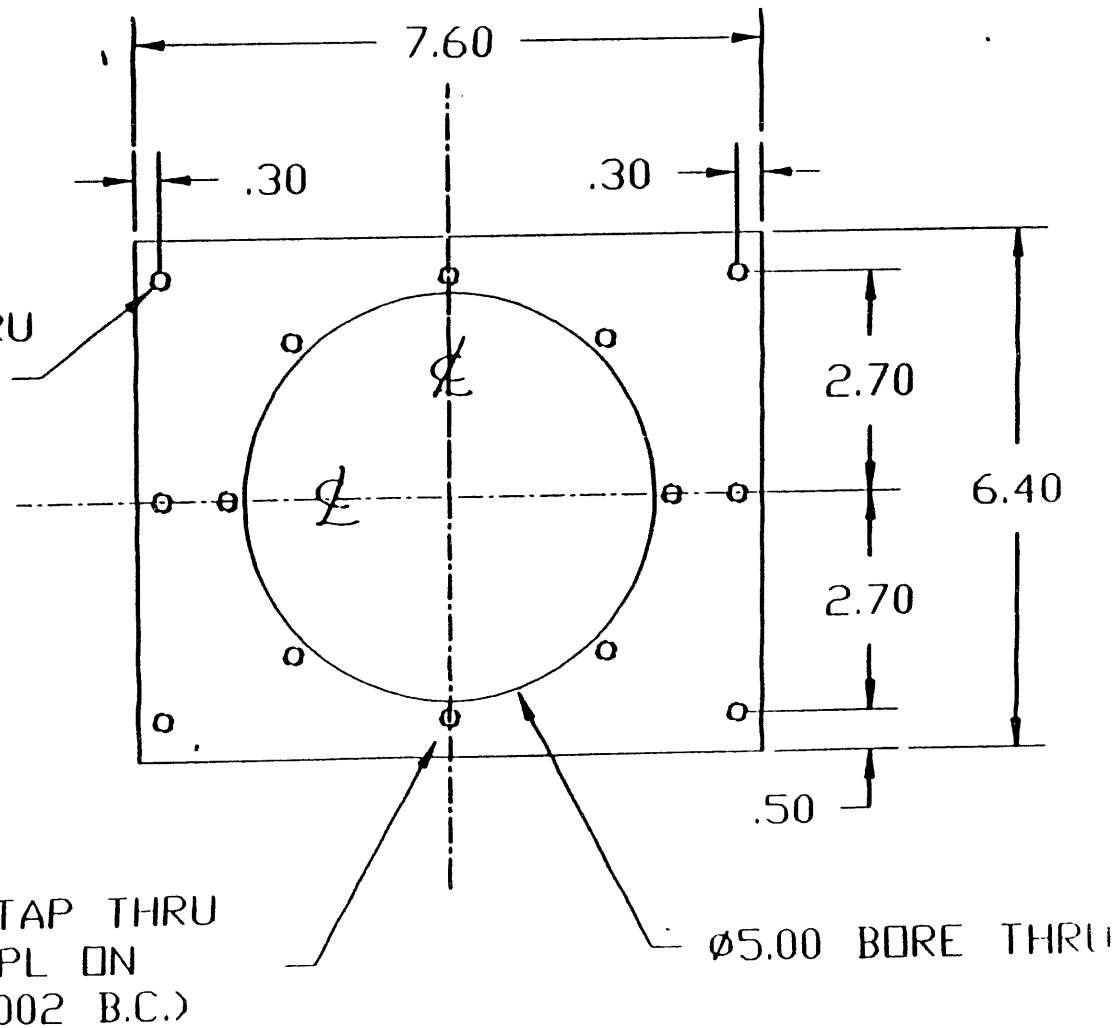


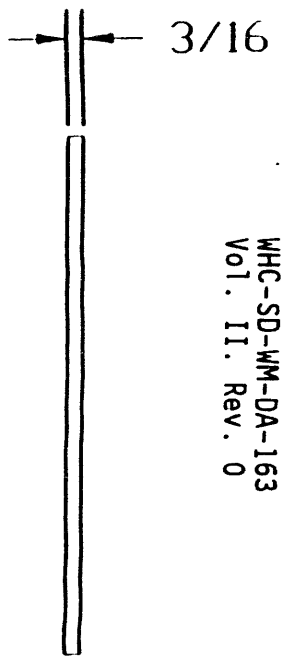




WHC-SD-WM-DA-163
Vol. II. Rev. 0

435

# 41-4 SIDE PLATE

CRESTONE PRODUCTS, INC.
4175 W. QUAIL RIDGE DR.
BOISE, ID 83703
TEL 208-368-7998
FAX 208-368-7999

MATL: ALUM 6061 T6
TOL: .XX ±.020 .XXX ±.010

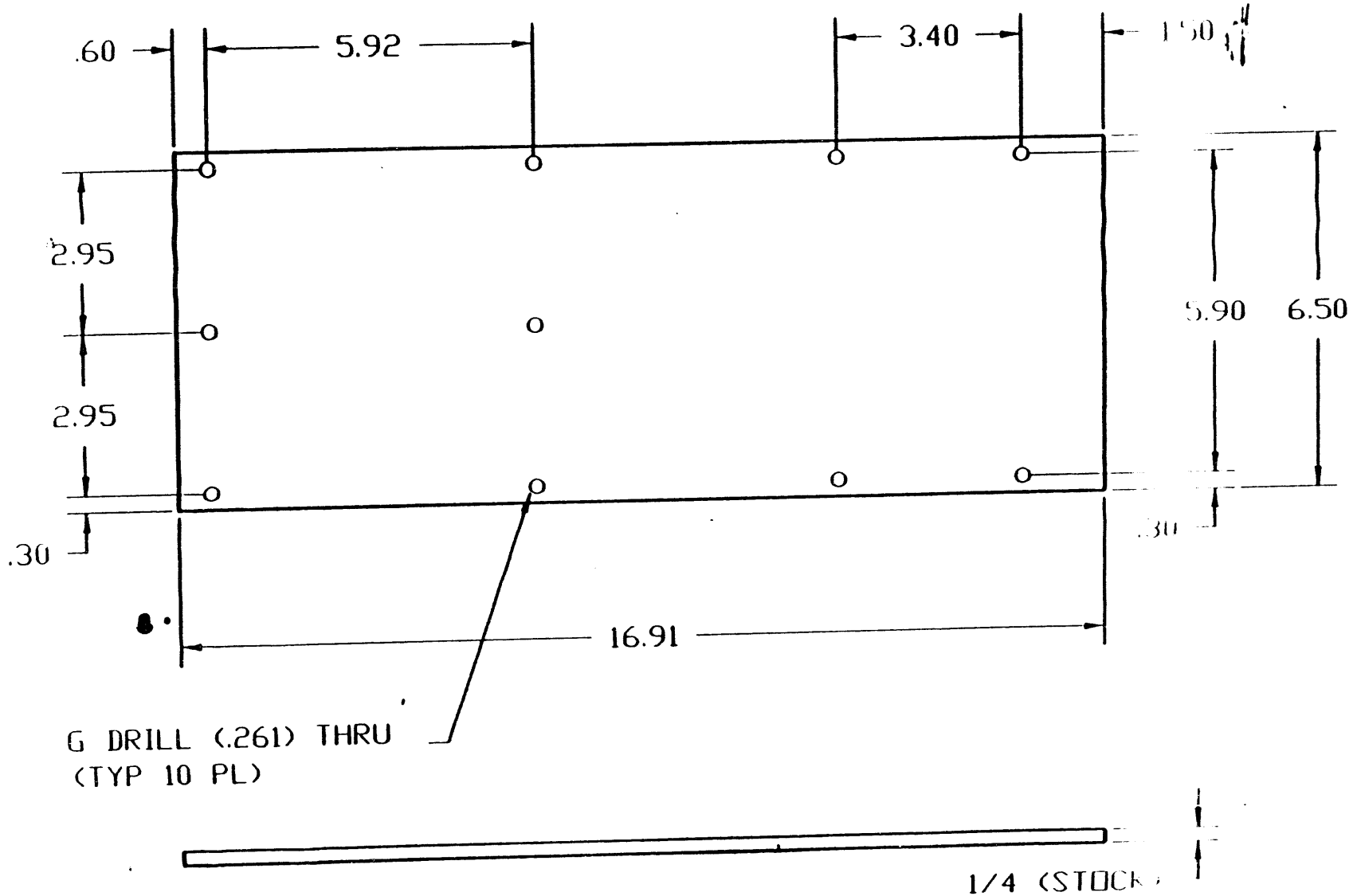

MATL: ALUM 6061-T6
TOL: .XX ±.020 .XXX ±.010

CRESTONE PRODUCTS, INC.
4175 W. QUAIL RIDGE DR.
BOISE, ID 83703
TEL 208-368-7998
FAX 208-368-7999

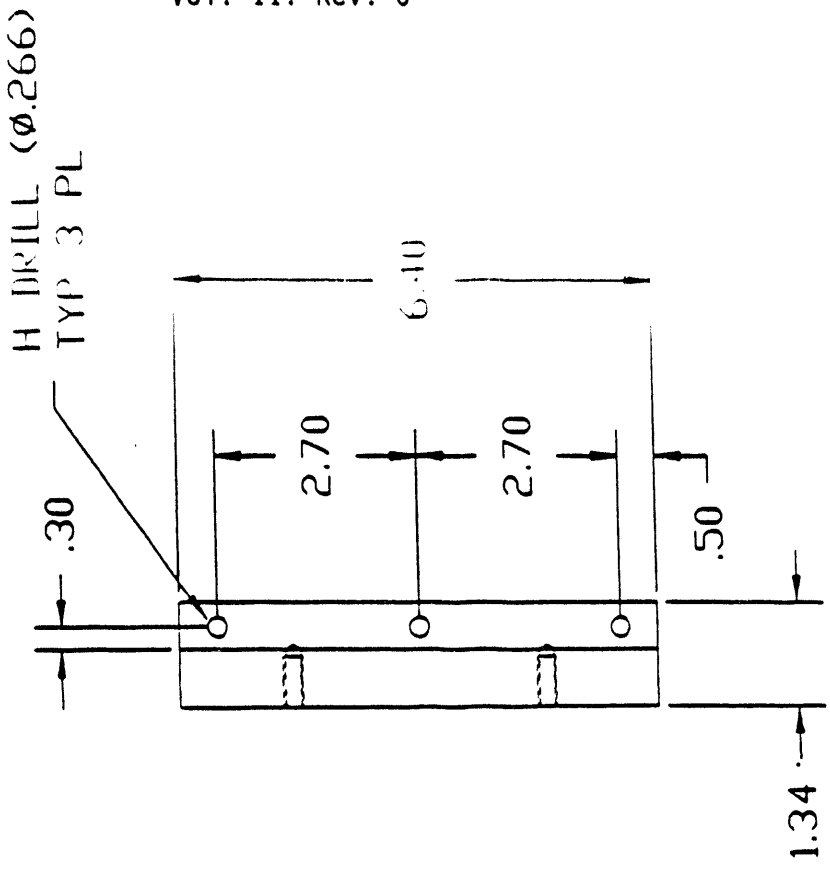


41-5 END PIECE

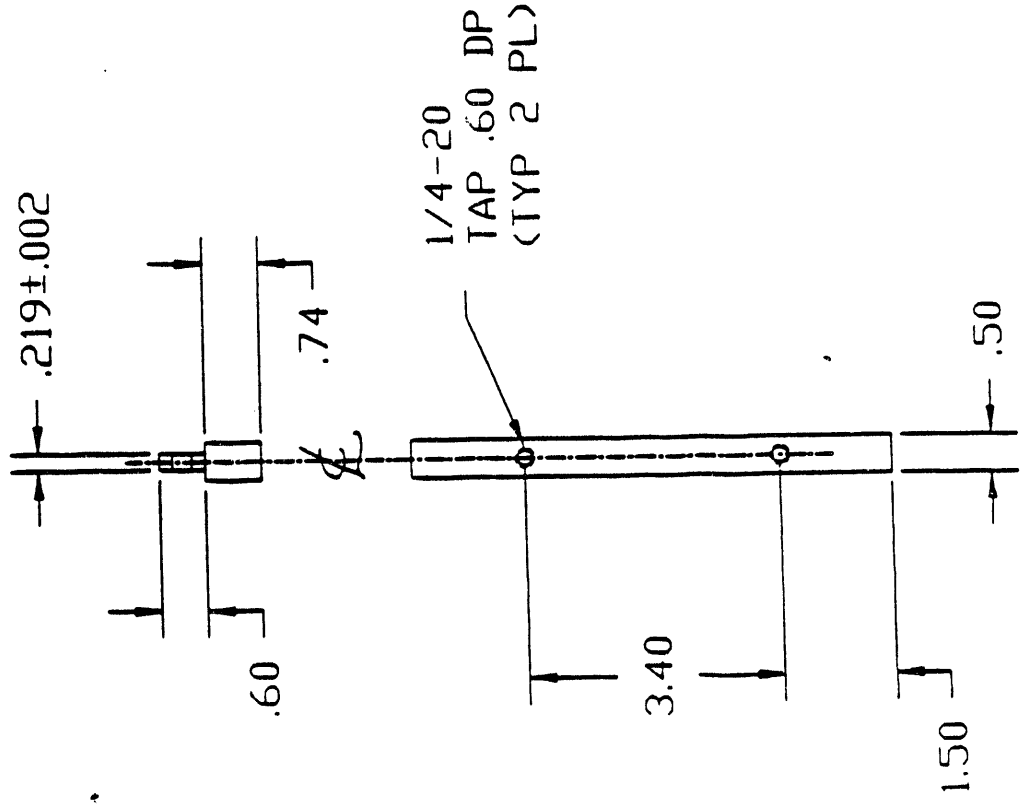

# 41-6 CAMERA GEAR SPACER

MATL: ALUM 6061-T6
TOL: .XX ±.020 .XXX ±.010

CRESTONE PRODUCTS, INC.
4175 W. QUAIL RIDGE DR.
BOISE, ID 83703
TEL 208-368-7998
FAX 208-368-7999

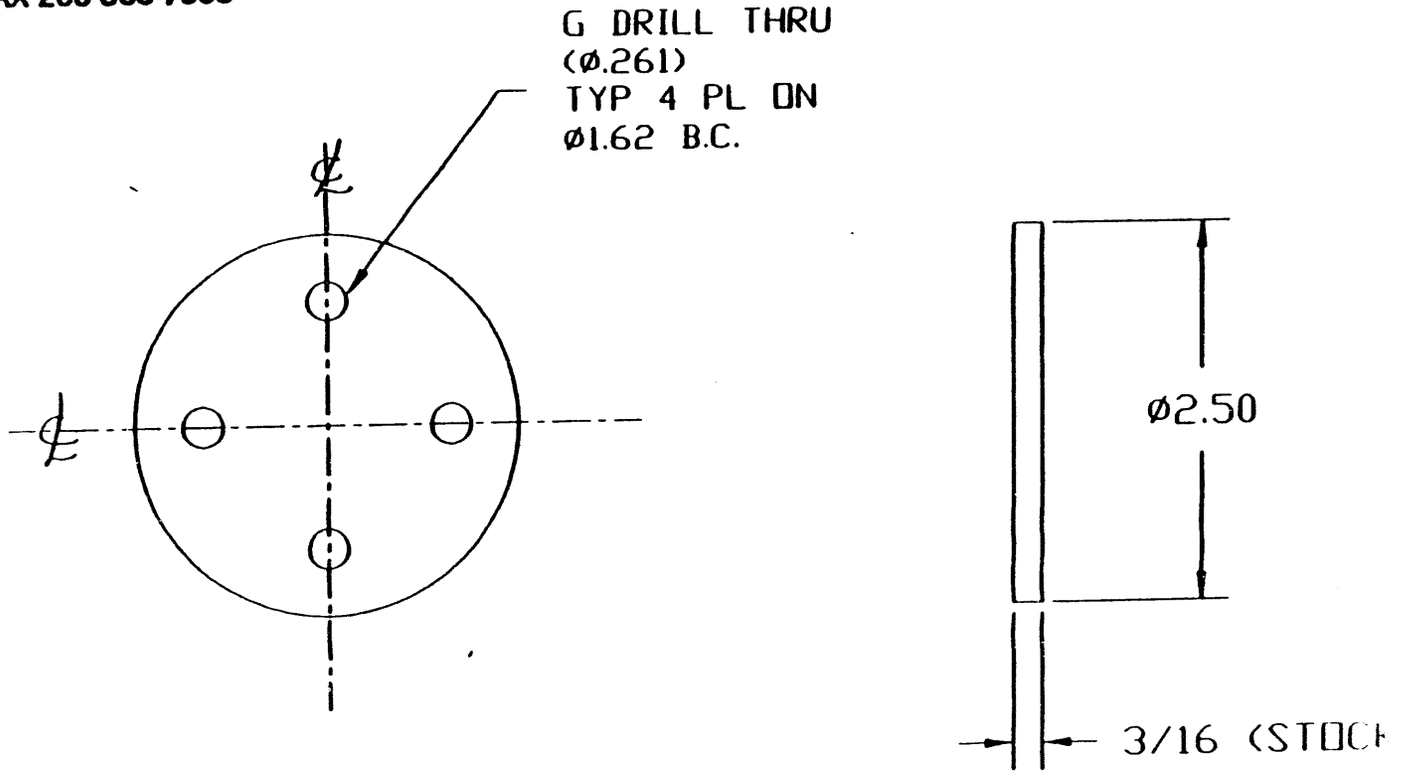






A 38

4 of 4

# 41-7 P&T BACK RING

MATL: ALUM 6061-T6
TOL: .XX ±.020 .XXX ±.010

CRESTONE PRODUCTS, INC.
4175 W. QUAIL RIDGE DR.
BOISE, ID 83703
TEL 208-368-7998
FAX 208-368-7999

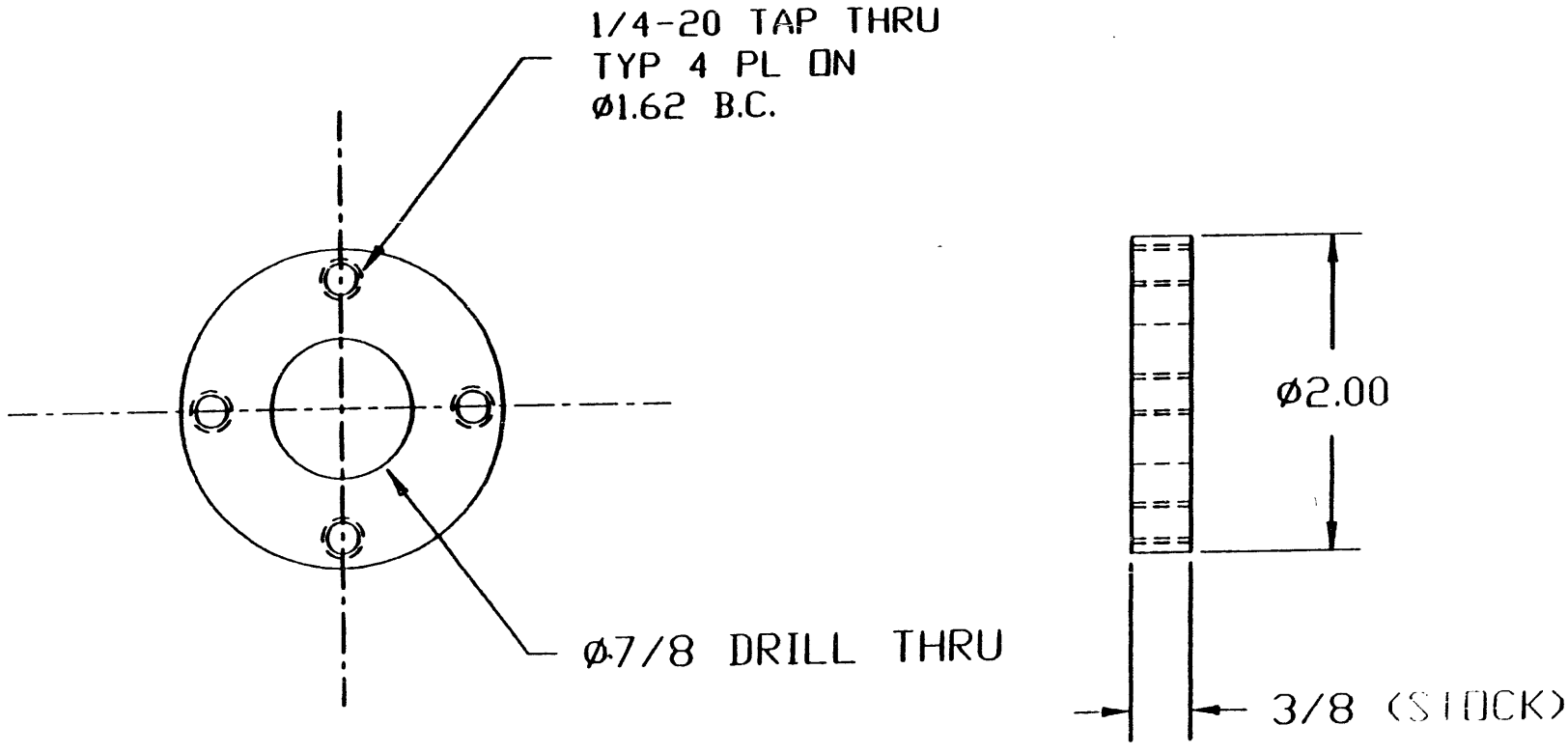






A.39

# 41-8 P&T OUTPUT SPACER

MATL: ALUM 6061-T6
TOL: .XX ±.020 .XXX ±.010

**CRESTONE PRODUCTS, INC.**
**4175 W. QUAIL RIDGE DR.**
**BOISE, ID 83703**
**TEL 208-368-7998**
**FAX 208-368-7999**

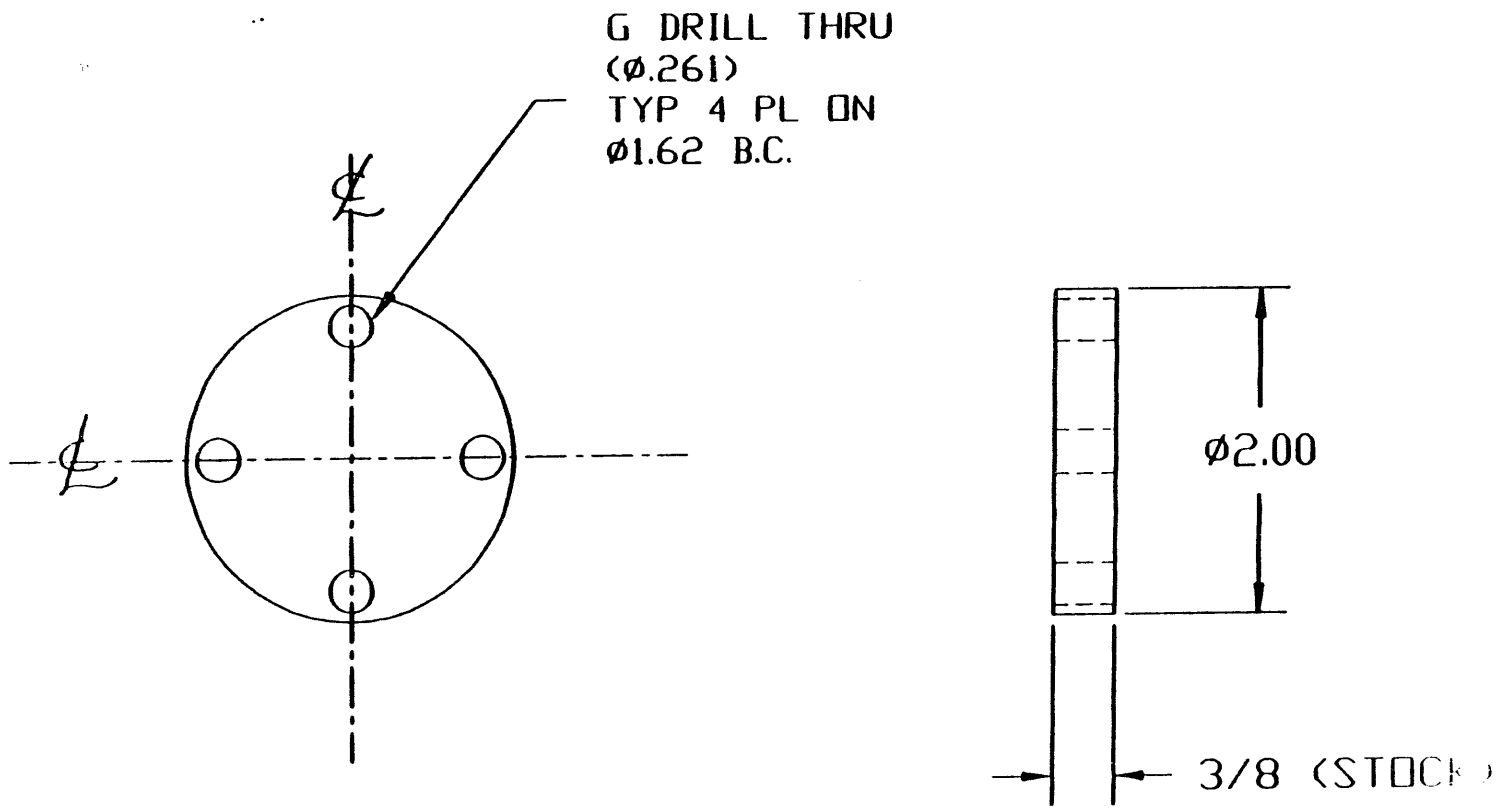






A-40

# 41-9 SPACER #2

MATL: ALUM 6061-T6
TOL: .XX ±.020 .XXX ±.010

**CRESTONE PRODUCTS, INC.**
**4175 W. QUAIL RIDGE DR.**
**BOISE, ID 83703**
**TEL 208-368-7998**
**FAX 208-368-7999**

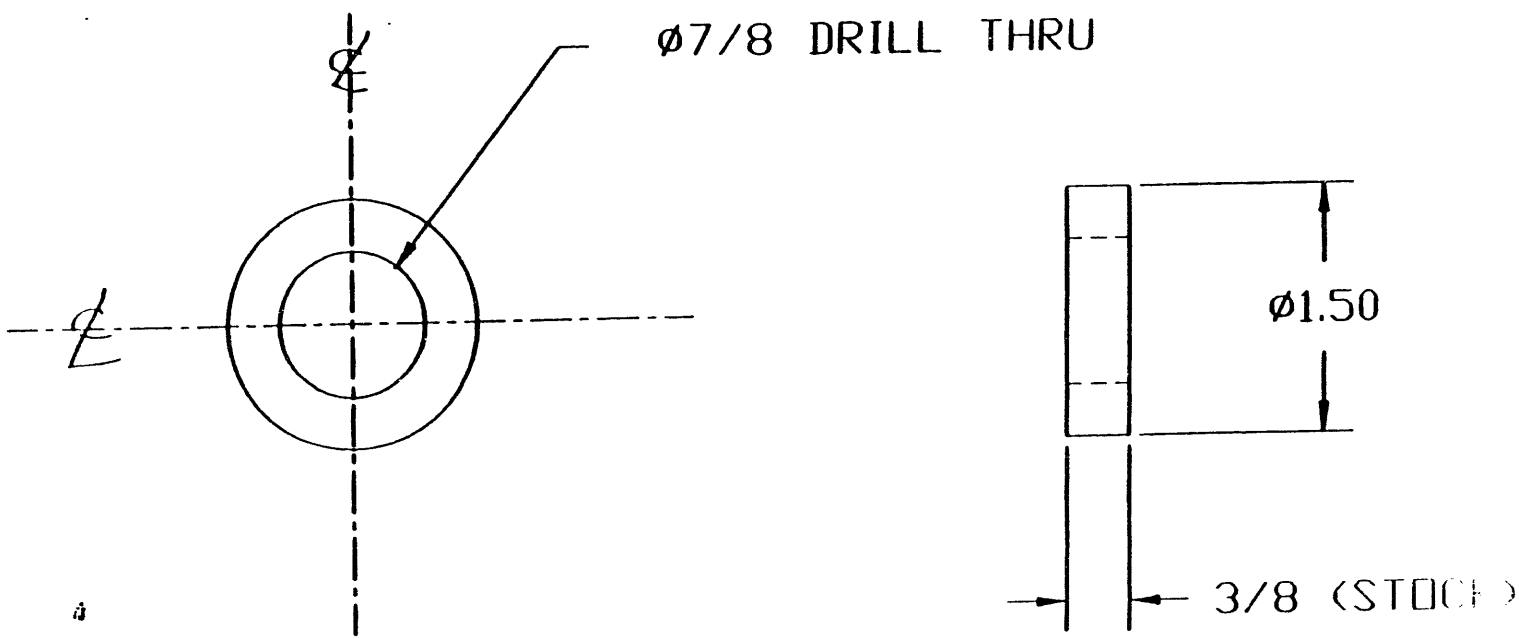

# 41-10 DELRIN RING

MATL: 1/4 THICK BLACK DELRIN
TOL: .XX ±.020 .XXX ±.010

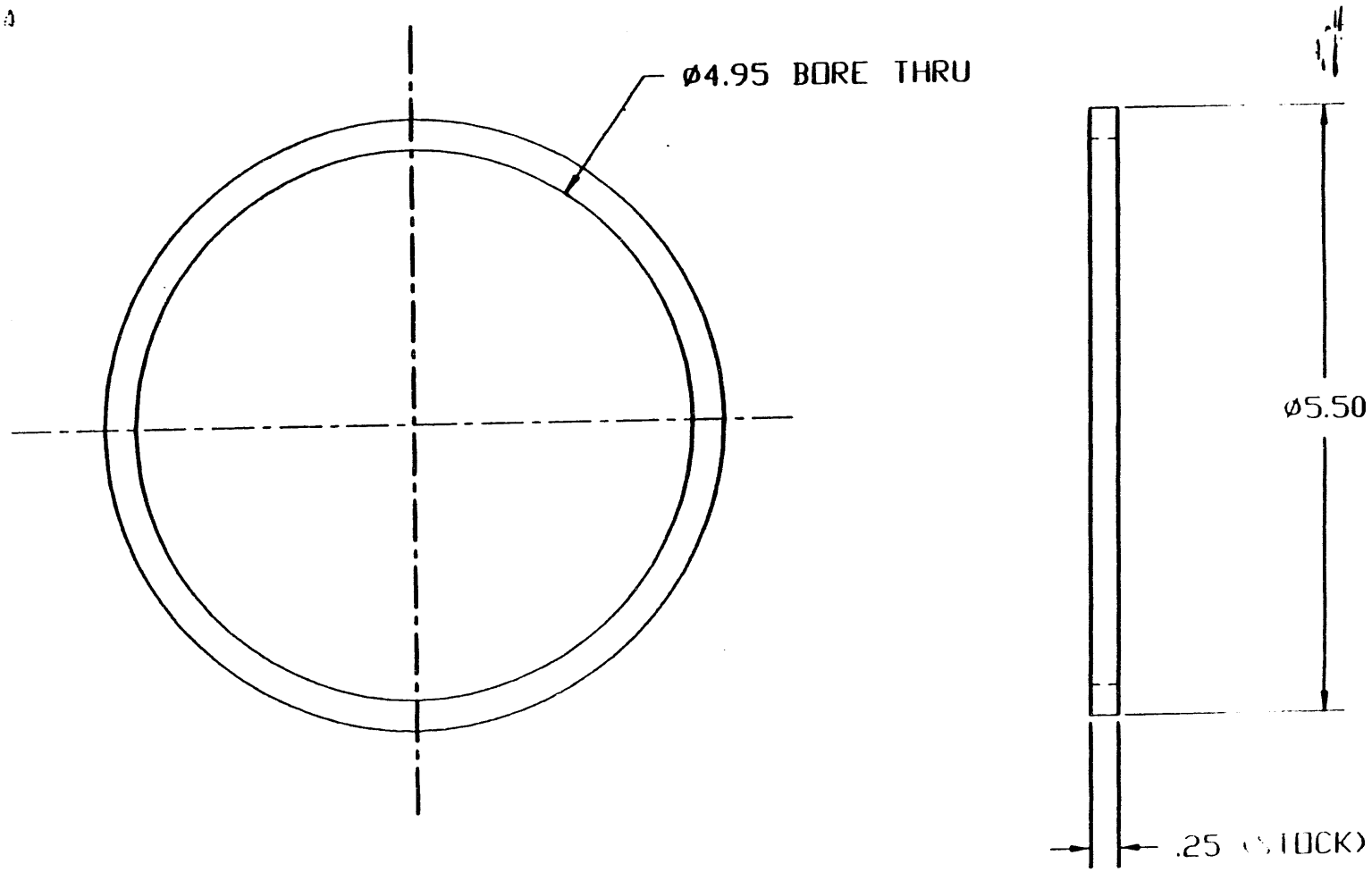



CRESTONE PRODUCTS, INC.
4175 W. QUAIL RIDGE DR.
BOISE, ID 83703
TEL 208-368-7998
FAX 208-368-7999

# 41-11 SPROCKET

MATL: BERG 25SP3S-40
.250 PITCH SS SPROCKET

TOL: .XX ±.020 .XXX ±.010

**CRESTONE PRODUCTS, INC.**
**4175 W. QUAIL RIDGE DR.**
**BOISE, ID 83703**
**TEL 208-368-7998**
**FAX 208-368-7999**

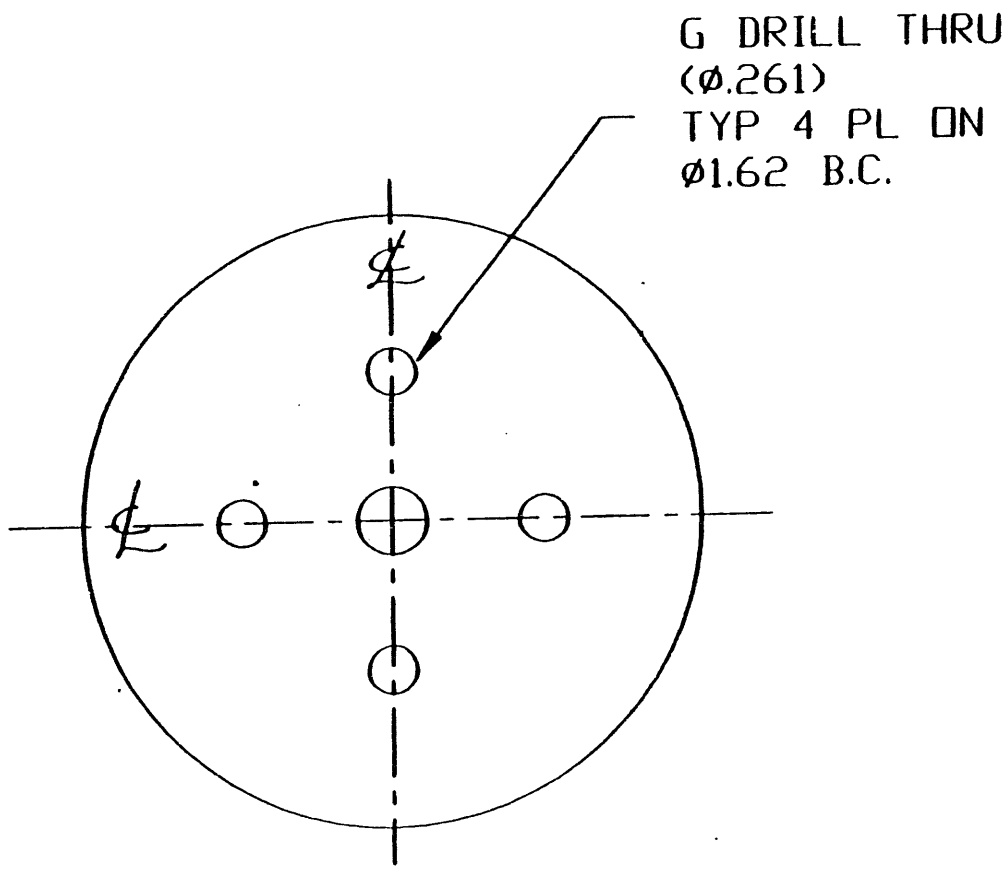

# FAX MESSAGE

WESTINGHOUSE HANFORD COMPANY
MECHANICAL ENGINEERING
PO BOX 1970 MSIN H5-70
RICHLAND WA 99352

Date: 6/3/94 Number of Pages including this one 4

To: BAHRAM MOSADDAD From: JOHN STREHLOW

Fax Number: (415) 398-1904 Fax Number: _____

Telephone: _____ Telephone: (509) 376-5009

Message:

LET ME KNOW IF YOU NEEN ANY MORE INFO.

THANK, JOHN

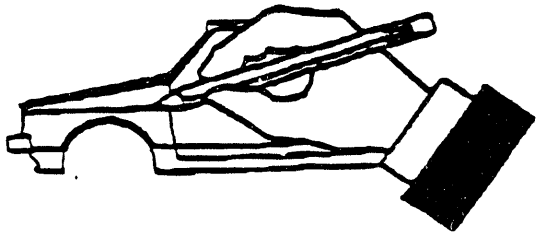

We're Making Sure!

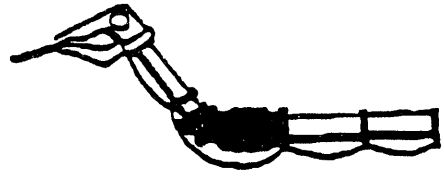

CC: BM, PKL, FILE 43-66481-01
orig

CRESTONE
PRODUCTS INC.

4175 W. Quail Ridge Dr., Boise, ID 83703
Tel (208) 383-7983 Fax (208) 383-7999

# FAX COVER SHEET

*To:* Roy

*Tel No.:*

*Company:* R.J. Electronics

*Date:* June 3, 1994

*Number of pages including this sheet:* 2

*From:* Bruce

Hi Roy:

Here is information regarding questions on the upper mast system for 241-AW-101:

1. The bolt hole diameter on drawings 42-2 and 42-3 was increased to 17/32 (.531) for clearance of the 1/2-13 bolts.

2. The material for the manifold tube (drawing 42-5) has been changed from 17-4 PH stainless steel to 304 stainless steel.

3. The weld symbols are according to American National Standard ANSI/AWS A2.4-79

4. The electrode type for all welds is ASTM 308L.

5. Material for the shielding plate is structural carbon steel ASTM A-36 with a yield strength of 36,000 psi and tensile strength of 58,000-80,000 psi.

6. Material for the manifold tube is 304 stainless steel ASTM a-312/SA-312. 304 SS has a yield strength of approximately 35,000 psi and tensile strength of approximately 85,000 psi.

7. Material for the flange plate (42-7) and all other plates is 304 stainless steel ASTM A240. Yield strength approximately 35,000 psi and tensile strength approximately 85,000 psi.

8. The 1/2-13 x 5 inch bolts used to retain the shielding plate are 18-8 stainless steel with an minimum tensile strength of 75,000 psi (ordered from McMaster Carr).

The minor thread diameter for 1/2-13 UNC-1A and UNC-2A threads is 0.4069 in. Using this diameter, the effective cross sectional area of the bolt is 0.130 square inch, and the minimum breaking strength of each bolt is 0.13 x 75,000 = 9,750 lbs. The combined breaking strength for 10 bolts is 97,500 lbs.

With an estimated mast weight of 1,172 lbs, the safety factor for dead lift is approximately 83.

Best regards,
Bruce

101-AW

Ron, Check on th

# 42-1 UPPER MAST ASSEMBLY WITH SHIELDING PLATE

☆ Bolt h pattern may not match accord to Blum Engr.

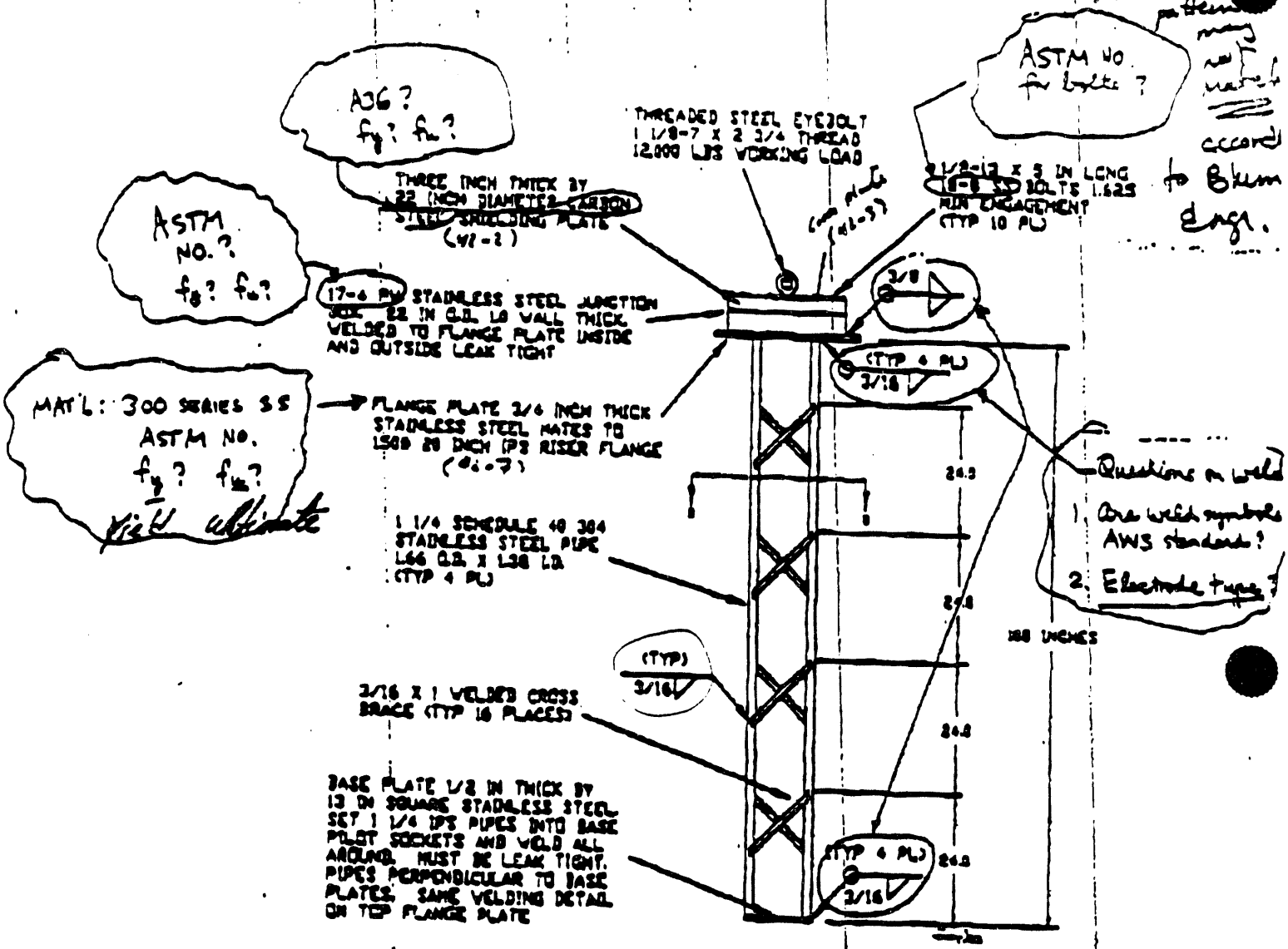


CRESTONE PRODUCTS, INC.
4175 W. QUAIL RIDGE DR.
BOISE, ID 83703
TEL 208-368-7968
FAX 208-368-7999

# ATTACHMENT B

This Page Intentionally Left Blank

**(Attachment B Not Used)**

# ATTACHMENT C

**URS Consultants**
**URS/John A. Blume & Associates, Engineers**

Job no. 66458-01 Job WHC/MPF ANALYSIS
Client
Subject ALLOWABLE STRESSES

Sheet No. C.1
Calc. No.
Rev. No.
By PKL Date 5/31/94
Chk'd Date 7/13/94

REFERENCE "NUCLEAR FACILITIES — STEEL SAFETY RELATED STRUCTURES FOR DESIGN FABRICATION & ERECTION", AMERICAN NATIONAL STANDARD. ANSI/AISC N690-1984

## ALLOWABLE STRESSES

### STRUCTURAL STEEL (SECT Q1.5.1)

TENSION. $F_t = 0.6 f_y$ on gross area
$F_t = 0.5 f_u$ on effective net area
$F_t = 0.45 f_y$ for pin-connected members

SHEAR: $F_v = 0.40 f_y$

COMPRESSION: $$F_a = \frac{\left[1 - \frac{\left(\frac{Kl}{r}\right)^2}{2C_c^2}\right] f_y}{\frac{5}{3} + \frac{3\left(\frac{Kl}{r}\right)}{8C_c} - \frac{\left(\frac{Kl}{r}\right)^3}{8C_c^3}} \quad \text{for } \frac{KL}{r} \le C_c \qquad C_c = \sqrt{\frac{2\pi E}{f_y}}$$

$$F_a = \frac{12\pi^2 E}{23\left(\frac{Kl}{r}\right)^2} \quad \text{for } \frac{KL}{r} > C_c$$

BENDING: $F_b = 0.66 f_y < 0.7 f_u$ COMPACT SECTION
$F_b = 0.6 f_y < 0.7 f_u$ non-compact SECTION
$F_b = 0.75 f_y$ COMPACT, BENDING IN MINOR AXIS

### STAINLESS STEEL (SECT Q1.5.9)

COMPRESSION: $$F_a = \frac{f_y}{2.15} - \left(\frac{\frac{f_y}{2.15} - 6}{120}\right)\frac{Kl}{r} \quad \text{for } \frac{Kl}{r} \le 120$$

$$F_a = 12 - \frac{1}{20}\left(\frac{Kl}{r}\right) \quad \text{for } \frac{Kl}{r} > 120$$

TENSION, SHEAR, BENDING same as above for structural steel

**URS Consultants**
**URS/John A. Blume & Associates, Engineers**

Job no. 66458-01 Job WHC/MPF ANALYSIS
Client
Subject LOAD COMBINATIONS

Sheet No. C.2
Calc. No.
Rev. No.
By PKL Date 6/1/94
Chk'd [illegible] Date 7/1[illegible]/94

LOAD COMBINATION & STRESS LIMIT COEFF. (TABLE Q1.571)

NORMAL 1.0 × DL

DL = DEAD LOAD
EQ = SEISMIC LOAD

EXTREME 1.6 (DL ± EQ)
1.4 (DL ± EQ) for SHEAR & BOLTS

# ATTACHMENT D

May 25, 1994

URS CONSULTANTS
JOB #
Orig to:
Correspondence
Budget/Contract
Copies to:

Kevin M. Jones
Westinghouse Hanford Company
P.O. Box 1970 MSIN H5-56
Richland, Washington 99352

Bahram Mosaddad
URS Blume and Associates
100 California St., Suite 500
San Francisco, California 94111-4529

Mr. Bahram:

This package contains the information requested by URS Blume for the mulitport flange and video camera analyses. The comments that follow address specific questions and the following list describes the information included in this package.

Sincerely,

Kevin M. Jones

Kevin M. Jones
Engineer -- Component Stress Analysis

Comments:

1. The material called out for the risers on tanks 241AW101 and -SY101 are given on drawings H-2-70420 and H-2-37792, respectively. The material for the riser is ASTM A134 A283 Grade A Carbon Steel. The specification is clear on drawing H-2-70420 for AW101. Although it is unclear on SY101, it is the same material and grade.

2. The length and/or elevations for the 42 in. riser on AW101 will have to be determined. As per drawing H-2-70396 only the top elevation is specified. For SY101 the length is specified on drawing H-2-37776 and the elevation of the top of the riser is specified on drawing H-2-72213 which is included in this package. Drawings H-2-70396 and -37776 were previously provided.

3. The estimated weight of the Multiport flange will be provided ASAP.

4. The weights for the different camera components are as follows:

   The weight of just the camera and the pan and tilt which are bolted to the bottom of the camera mast assembly is estimated at 128 lbf.

   The weight of the camera structural assembly is estimated at 1099 lbf.

   The weight of the entire video camera to be placed in tank 241AW101 is 1227 lbf.

5. In response to the facsimile from Peter Lum asking for the size and description of the part labeled 40-2 on sheet 40-6 of the drawings for the lower mast of the camera assembly, the part should be labeled 40-12 which is gas piping and is clearly described on sheet 40-12.

6. For the multiport flange both 304 and 304L stainless steel are called out. The lower yield strength of should be used.

UFS CONSULTANTS
JOB #
Orig to:
Correspondence
Budget Contract

D 3



| Item # | Item Description |
|---|---|
| 1. | Tank 241SY101 and -AW101 tank section drawings showing tank dome information (Drawings H-2-37706, -37707, -37708, -37772, -70307, -70308, -70309, -70394). |
| 2. | Drawing H-2-37778. |
| 3. | An information sheet from the manufacturer giving the strengths of the weld studs. The construction specification sent earlier gives the type of anchor bolts (H4L). |
| 4. | A copy of the weld specification HS-VS-0013. |
| 5. | Drawing H-2-72213. |
| 6. | Pressure time history information for the 1.25 MEB Hydrogen burn event. |
| 7. | Displacement time history information for the 1.25 MEB Hydrogen burn event. |
| 8. | Seismic time histories. (On 3 1/2 in. diskette) |
| 9. | The current Multiport flange drawings. |

URS CONSULTANTS
Date
JOB #
Orig to:
Correspondence
Budget Contract
Copies to:

# ATTACHMENT E

The following table contains a list of the "As-Built" drawings for the Crestone Camera These drawings were received by URS on 8/1/94

| # | Drawing/Part Number | Drawing Name | Drawing Revision | Revision Date |
|---|---|---|---|---|
| 1 | 404142 | 241-AW-101 TV System | --- | 6/18/94 |
| 2 | 42U1 | Upper Mast | --- | 6/18/94 |
| 3 | 42U2 | Upper Mast | --- | 6/18/94 |
| 4 | 42U3 | Upper Mast | --- | 6/18/94 |
| 5 | 42U4 | Upper Mast | --- | 6/18/94 |
| 6 | 42U5 | Upper Mast | --- | 6/18/94 |
| 7 | 42U6 | Upper Mast | --- | 6/18/94 |
| 8 | 42U7 | Upper Mast | --- | 6/18/94 |
| 9 | 42U8 | Upper Mast | --- | 6/18/94 |
| 10 | 42U9 | Upper Mast | --- | 6/27/94 |
| 11 | 40L1 | Lower Mast | --- | 6/18/94 |
| 12 | 40L2 | Lower Mast | --- | 6/18/94 |
| 13 | 40L3 | Lower Mast | --- | 6/18/94 |
| 14 | 40L4 | Lower Mast | --- | 6/18/94 |
| 15 | 40L5 | Lower Mast | --- | 6/18/94 |
| 16 | 40L6 | Lower Mast | --- | 6/18/94 |
| 17 | 41R1 | Roll Mechanism | --- | 6/18/94 |
| 18 | 41R2 | Roll Mechanism | --- | 6/18/94 |
| 19 | 41R3 | Roll Mechanism | --- | 6/18/94 |
| 20 | 41R4 | Roll Mechanism | --- | 6/18/94 |
| 21 | 41R5 | Roll Mechanism | --- | 6/18/94 |

**URS Consultants, INC.**
**URS/John A. Blume & Associates, Engineers**

Job no. 66481-01 Job WHC/MPF ANALYSIS
Client
Subject EVALUATIONS of CHANGES
(PRELIMINARY DRAWINGS vs "AS-BUILT" DWGS)

Sheet No. E.
Calc. No.
Rev. No.
By Date 8/3/94
Chk'd RIK Date 8/3/94

| ITEM NO | PRELIMINARY PAGE NO | AS-BUILT PAGE NO. | DESCRIPTION of CHANGES | IMPACT EVALUATIONS |
|---|---|---|---|---|
| 1 | A.2 | E.2 | MAT'L of JUNCTION BOX (MANIFOLD TUBE) CHANGED FROM 17-4 PH SS TO 304 SS | $f_y = 25$, $f_t = 70$ ksi were USED; no IMPACT |
| 2 | A.2 | E.2 | CROSS-BRACES ARE ADDED | THIS CHANGE SHOULD LOWER THE STRESSES IT WILL BE BETTER STRUCTURALLY. |
| 3 | A 3 | E 3 | Ø17/64 CHANGED TO Ø17/32 DRILL HOLES | IT WAS AN ERROR BEING CORRECTED. OK |
| 4 | A.5 | E.4 | "WELD LEAK TIGHT" IS ADDED TO 1/8 WELD | OK |
| 5 | A.6 | E.5 | • 20° CHANGED TO 18°<br>• 1/4 NPT " " 1/2 NPT<br>• TYP 2 PL 40° APART TO 36° APART<br>• MAT 17-4 SS TO 304 SS | NO IMPACT IN STRUCTURAL ANALYSIS |
| 6 | A.10 | E.6 | ORIENTATION of THE 4 SS PIPES HAS BEEN CHANGED | NO IMPACT |
| 7 | A.13 | E.7 | DETAILS of CROSS BRACES<br>• ADDED WELD @ CENTER of BRACES<br>• REMOVE ALL AROUND WELD SYMBOL BETWEEN BRACE & PIPE | NO IMPACT<br>NOT ACCEPTABLE DETAIL; SHOULD WELD ALL-AROUND<br>If INSIDE WELD is DIFFICULT, SHORTEN BRACES. * |
| 8 | A 25 | E.13 | Same as ITEM 7 | SAME AS 7 * |

* RESOLVED; SEE ATTACHED FAX FROM HANFORD DATED 8/8/94

RIK 8/8/94

E.3

# FAX MESSAGE

FROM: MECHANICAL ENGINEERING
MAILSTOP H5-70
WESTINGHOUSE HANFORD COMPANY
P.O. BOX 1970
RICHLAND, WA 99352

DATE: 8/8/94

Number of Pages Including This One: 2

TO: RABIEH KHOURY

FROM: JOHN STREHLOW

FAX NUMBER: (415)398-1904

FAX NUMBER:

TELEPHONE:

TELEPHONE: (509) 376-5009

MESSAGE:

I HAVE INSPECTED THE AW-101 CAMERA ASSEMBLY AND FOUND THAT THE CROSS BRACE WELDS WERE PERFORMED AS REQUIRED IN THE FOLLOWING INSTRUCTION MEMO TO THE MANUFACTURER. THE VENDOR DRAWINGS WILL BE UPDATED TO REFLECT THIS AS-BUILT CONFIGURATION.

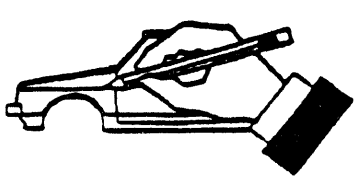

We're Making Sure!

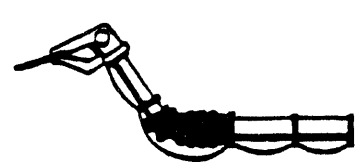

**DON'T SAY IT** — *Write It!*

DATE: June 9, 1994

TO: Ron Harding

FROM: Ed Kohlman

Telephone: 6-3696

SUBJECT: Additional bracing required on AW-101 camera structure

According to feedback from Blume (analysis group doing seismic and structural work on the camera), an additional brace or T-section welded over the existing brace is required for it to meet code. We request that an additional brace be added at each location as shown on the sketch below.

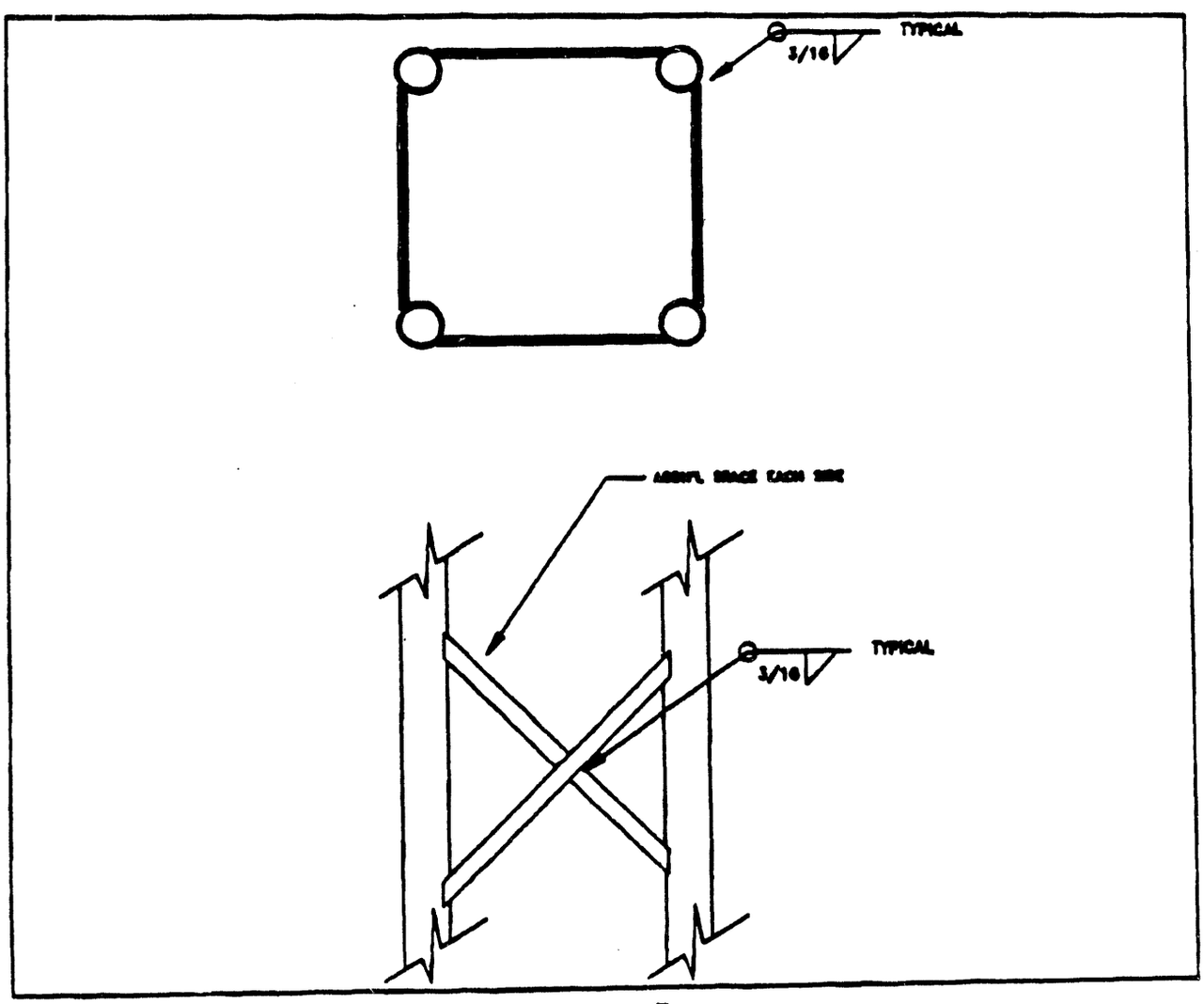


54-3000-101 (12/92) GEF013

# Attachment I to Volume II

## Resolution of Independent Review Comments

| REVIEW COMMENT RECORD (RCR) | 1. Date 7/27/94 | 2. Review No. 94019.2 |
|---|---|---|
| | 3. Project No. | 4. Page 1 |

| 5. Document Number(s)/Title(s) | 6. Program/Project/Building Number | 7. Reviewer | 8. Organization/ Group | 9. Location/ Phone |
|---|---|---|---|---|
| Draft Report "Structural Analysis of Creston Video Camera Installation on Tank 241 AW 101" | | NICK MOISIDIS | ADVENT Engineering Services, Inc. | San Ramon, CA (510) 743-7777 |

17. Comment Submittal Approval:

Organization Manager (Optional) Date

R. Baliga 8/9/94
Project/Cognizant Engineer Date

10. Agreement with indicated comment disposition(s)

Nick Moisidis 8/9/94
Reviewer Date

R. Baliga 9/9/94
Project/Cognizant Engineer Date

11. Closed

Reviewer Date

| 12. Item | 13. Comment(s)/Discrepancy(s) (Provide technical justification for the comment and detailed recommendation of the action required to correct/ resolve the discrepancy/problem indicated.) | 14. Hold Point | 15. Disposition (Provide justification if NOT accepted.) | 16. Status |
|---|---|---|---|---|
| 1. | Weight of manifold tube (Part Number 42-5) was increased from 0.0748k (calculated) to 0.2189k to account for unmodelled parts of the manifold. By artificially increasing the weight makes the manifold tube not to participate in the dynamic response analysis of the flexible modes. Please justify. | | The maximum computed stress ratio is equal to 0.38 which occurs at welded connection between the lacing members and the 1.25" SS pipes of the camera mast. The impact of the missing flexible mass on this stress ratio will be in proportion to the mass ratio which is less than 20%. As a result the maximum stress ratio remains within allowable limit of 1.0. | CLOSED |
| 2. | The hand calculated mass of the 3/8 gas pipe (Part Number 40-12) is in error by one order of magnitude (0.00013 k vs. 0.0013 k). Please explain the impact of this error in the final analysis results. | | This error resulted in 1.3 lbs out of the total weight of 1,227 lbs in the overall weight calculations Therefore, it has a very small or no impact. | CLOSED |

| REVIEW COMMENT RECORD (RCR) | 1. Date 7/27/94 | 2. Review No. 94019.2 |
|---|---|---|
| | 3. Project No. | 4. Page 2 |

| 12. Item | 13. Comment(s)/Discrepancy(s) (Provide technical justification for the comment and detailed recommendation of the action required to correct/resolve the discrepancy/problem indicated.) | 14. Hold Point | 15. Disposition (Provide justification if NOT accepted.) | 16. Status |
|---|---|---|---|---|
| 3. | Please provide basis for 20 mode cut-off. ASCE 4-86 Standard requires that analysis should include responses form all significant modes contributing to the total response. The number of modes included in the analysis should be selected so the response from the remaining higher modes not considered does not result in more than 10 percent increase in total system response. RUN CM-A-04 shows that Z-SUM for mode 20 is 86.69%, while for RUN CM-B-01 Z-SUM is 88.66%. | | The Z-SUM quantities reported in computer Runs CM-A-01 and -04 accounts only for the percentage of the flexible mass (less than 30% of total mass) participating in the dynamic response. The majority of the mass (more than 70%of total mass) are rigid and are accounted for in the analysis as equivalent static loads (See calculations for more detail). Therefore for example for a Z-SUM of 86% in actuality the total mass participating is approximately equal to: .86 * .3 + .7 =0.964 > .9 | CLOSED |
| 4. | Weld stress fw for the flange plate to SS pipe (Sheet 7.3.5) is in error. Please check value of 1.622 lbf/in. This was a spot check of the values in the table. | | The computed value of fw should be 1.566 instead of 1.622. This error is corrected. The rest of the computations were checked and no error was found. | CLOSED |
| 5. | Weld length Lw for the gas pipe to SS pipe (Sheet 7.3.5) is in error. The 1" value should have been 0.212". Please verify. Check again the weld stresses and the stress ratios in the table. | | The computed value of Lw should be 2.12" instead of 1". This error is corrected. The weld stresses and the stress ratios in the table were checked and no error was found. | CLOSED |
| 6. | Page 8.1.1 indicates that a relative displacement between the camera and the flange plate of about 215"(?) was included in the analysis. Please verify if a displacement of this magnitude was used. | | 215" is the length of the camera assembly. The text is revised on Page 8.1.1 as "Model B is the same as Model A, except, it also included the amplification from the MPF riser stick model" | CLOSED |

| 12. Item | 13. Comment(s)/Discrepancy(s) (Provide technical justification for the comment and detailed recommendation of the action required to correct/ resolve the discrepancy/problem indicated.) | 14. Hold Point | 15. Disposition (Provide justification if NOT accepted.) | 16. Status |
|---|---|---|---|---|
| 7. | Provide basis for the 3.0 Hz natural frequency for the camera unit specified on Sheet 9.1.1. This frequency is the first mode frequency of the structure including the camera unit. | | The text is revised as "Note that the first mode frequencies for the entire camera assembly are 3.21 Hz for Model A and 3.18 Hz for Model B. | CLOSED |
| 8. | Is Figure 1 of Section 9 the one providing the proposed revised configuration of the bracing? If not, replace with the proper figure and describe figure and reference in the conclusion section. | | Section 9.3 and Figure 9-1 are added. Section 9.3 describes the recommended modifications in more detail. | CLOSED |

| REVIEW COMMENT RECORD (RCR) | 1. Date 7/27/94 | 2. Review No. 94019 2 |
|---|---|---|
| | 3. Project No. | 4. Page 3 |

| 12. Item | 13. Comment(s)/Discrepancy(s) (Provide technical justification for the comment and detailed recommendation of the action required to correct/resolve the discrepancy/problem indicated.) | 14. Hold Point | 15. Disposition (Provide justification if NOT accepted.) | 16. Status |
|---|---|---|---|---|
| 9. | Where are references 1 through 5 and 10 used in the report? Are they needed? If so, indicate in the text of the report. | | References 1 through 5 and 10 are now used and indicated in the text of the final report. | CLOSED |
| 10. | In the second paragraph of page 6 of the report, describe Table 2-2 which summarizes the results of frequency analysis. Provide reasons why stopped at 20th mode and justify that contribution from higher modes is not significant to the total system response. | | Text is expanded in the final report to justify 20 modes. Please refer to the Final report. | CLOSED |
| 11. | On page 6 of the report, the 3rd paragraph indicates that Table 2-2, rather than Table 2-3, summarizes the computed stress ratios. Please revise. | | Text is revised. | CLOSED |
| 12. | On page 6 of the report, at the last paragraph, provide reference for the maximum lateral displacement of 0.6" at the location of the camera. Also illustrate this displacement on Figure 2-1 of the report, either as a detail to the model or provide a mode shape. | | A new Figure 2-3 is added to depict the deflected shape of camera assembly in the Final report | CLOSED |
| 13. | Describe Figure 1-4 in the report. Indicate that this Figure illustrates the proposed modification for the structure bracing. | | The description of the proposed modification for the bracings as shown on Figure 1-4 is added to the report. | CLOSED |
| 14. | Third paragraph on page 6 should read: "Table 2-3 summarizes ...for different ...structure. As shown in Table 2-3,.. for components of camera ..with the largest ...support (part No.40-4) respectively." | | Revised as recommended. See expanded version in Section 2.3 of the report. | CLOSED |
| 15. | On page 1.1 paragraph 4 and page 1.2 section 1.3 paragraph 3, replace "pounding" with "interference" | | Revised as recommended. | CLOSED |

| REVIEW COMMENT RECORD (RCR) | 1. Date 7/27/94 | 2. Review No. 94019.2 |
|---|---|---|
| | 3. Project No. | 4. Page 4 |

| 12. Item | 13. Comment(s)/Discrepancy(s) (Provide technical justification for the comment and detailed recommendation of the action required to correct/ resolve the discrepancy/problem indicated.) | 14. Hold Point | 15. Disposition (Provide justification if NOT accepted.) | 16. Status |
|---|---|---|---|---|
| 16. | On page 2.1.1 the last sentence of Model A Restraints should read: "This approach ... when it is subjected to loads ... remain stationary." | | Revised as recommended. | CLOSED |
| 17. | On page 2.1.2 first paragraph should read: "Using the drawings..., the description of parts... are tabulated in Table...."<br><br>The second paragraph should read: "Model B was fixed... and shares the same node with the 20" riser." | | Revised as recommended.<br><br>Revised as recommended. | CLOSED |
| 18. | On page 2.1.3 give table number and title. | | It is re-formatted as "Table 2-1: Description of parts". Also, the same for "Table 9-1: Summary of Stress Ratios". | CLOSED |
| 19. | On page 2.2.1, paragraph 3 should read: "Since the entire camera assembly is given as 1,227 lbs, adjustment factors... ." | | Revised as recommended. | CLOSED |
| 20. | On page 2.4.1, paragraph 2 should read: "The material property parameter, MN=N, was used... ." | | Revised as recommended. | CLOSED |
| 21. | On page 3.1.1, paragraph 3 should read: "Note that the spectrum can be scaled by 2/3 for vertical direction, however, for conservatism it was applied at 100% in all three directions." | | Text is revised. See page 3.1.1 for details. | CLOSED |

| REVIEW COMMENT RECORD (RCR) | 1. Date 7/27/94 | 2. Review No. 94019.2 |
|---|---|---|
| | 3. Project No. | 4. Page 5 |

| 12. Item | 13. Comment(s)/Discrepancy(s) (Provide technical justification for the comment and detailed recommendation of the action required to correct/resolve the discrepancy/problem indicated.) | 14. Hold Point | 15. Disposition (Provide justification if NOT accepted.) | 16. Status |
|---|---|---|---|---|
| 22. | On page 3.3.1, paragraph 3 should be reworded for clarity. | | Reworded as recommended. | CLOSED |
| 23. | On page 4.1.1, paragraph 1 and the paragraph describing the history of computer runs must be reworded for clarity. | | Page 4.1.1 is revised for clarity. | CLOSED |
| 24. | On page 7.1.1 fix typo: "deal" instead of "dead". | | Fixed as recommended. | CLOSED |
| 25. | On page 8.1.1 replace "pounding" with "interference". | | Replaced as recommended. | CLOSED |
| 26. | On page 9.1.1 text needs to be reworded for clarity. | | Section 9.1 and 9.2 are revised for clarity. Also, Section 9.3 is added. | CLOSED |
| | | | | CLOSED |
| 27. | An error was found in SAP90 model that the thickness of the manifold tube was input as 2" instead of 1". | | Element stress and the stress ratios are revised and it had insignificant or no impact to the analysis because the stress ratios were very low. | CLOSED |
| 28. | The thickness of the SS pipes is 0.14, less than 3/16" the size of the weld. | | With proper care per AWS specifications, the 3/16" weld can be used without damaging the SS pipes. | CLOSED |
| | | | | |

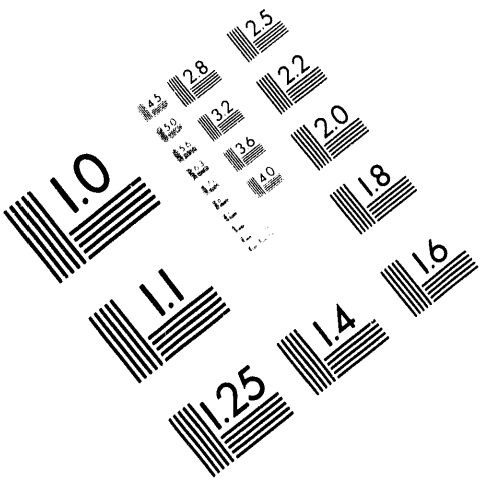

AIIM

**Association for Information and Image Management**

1100 Wayne Avenue, Suite 1100
Silver Spring, Maryland 20910

301/587-8202

Centimeter

Inches

MANUFACTURED TO AIIM STANDARDS
BY APPLIED IMAGE, INC.

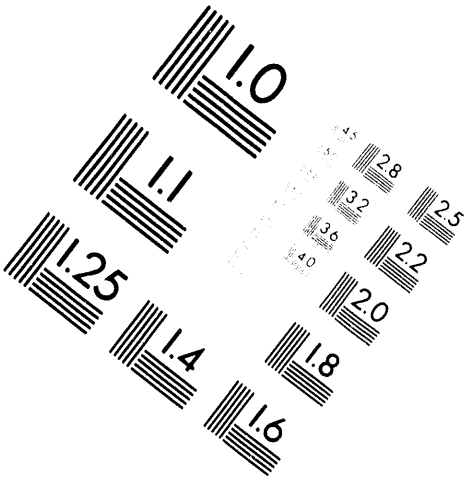

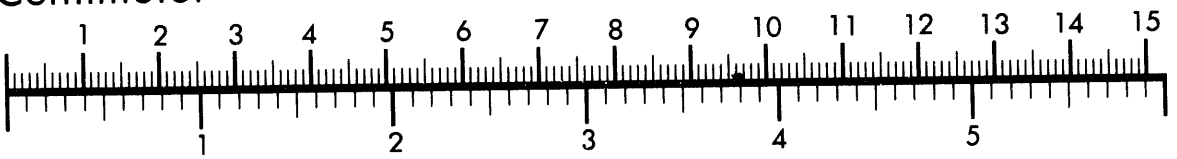

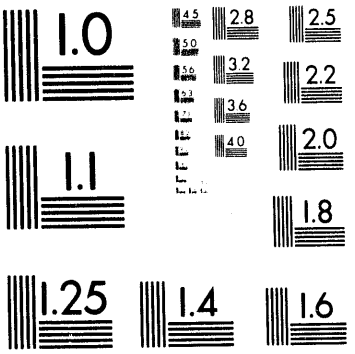

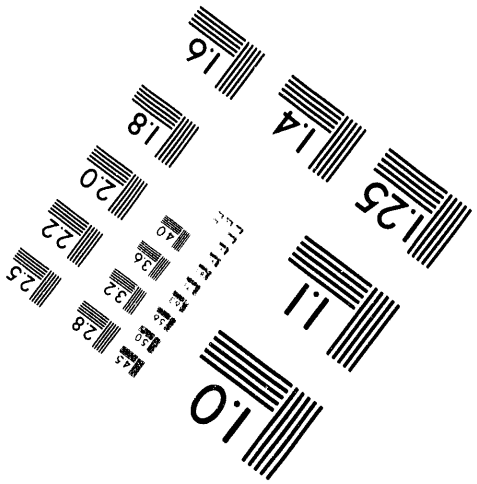

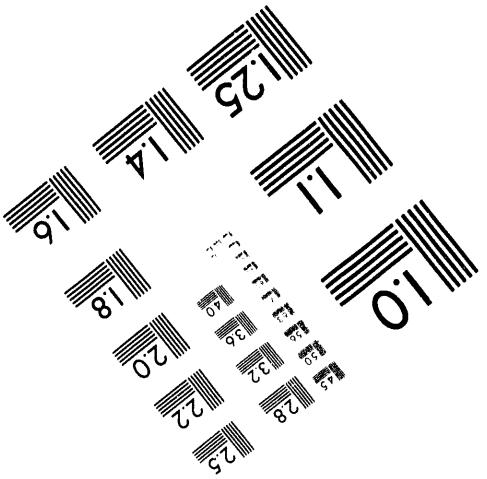

DATE
FILMED
12/8/94

END