Association for Information and Image Management
1100 Wayne Avenue, Suite 1100
Silver Spring, Maryland 20910
301/587-8202

Centimeter

Inches

MANUFACTURED TO AIIM STANDARDS
BY APPLIED IMAGE, INC.

1 of 1

DECLASSIFIED

[redacted]
(CLASSIFICATION)

DOCUMENT NO.
RL-REA-279

SERIES AND COPY NO.
[redacted]-15

DATE
12-10-64

GENERAL ELECTRIC

HANFORD ATOMIC PRODUCTS OPERATION - RICHLAND, WASHINGTON

[X] [redacted]ICTED DAT[redacted]
THIS [redacted]T CONTAINS RE[redacted]ATA AS DE[redacted]N THE ATOMIC [redacted]ACT OF 1954. [redacted]ANSMITTAL OR [redacted]LOSURE OF ITS [redacted]TENTS IN ANY [redacted]O AN UNAUTHORIZED [redacted]ERSON IS PROHIBI[redacted].

TITLE
Design Test Request No. 1263
K Reactor Graphite Key and VSR Channel Sleeve Test

[ ] OTHER OFFICIAL CLASSIFIED INFORMATION
THIS MATERIAL CONTAINS INFORMATION AFFECTING THE NATIONAL DEFENSE OF THE UNITED STATES WITHIN THE MEANING OF THE ESPIONAGE LAWS, TITLE 18, U.S.C., SECS. 793 AND 794, THE TRANSMISSION OR REVELATION OF WHICH IN ANY MANNER TO AN UNAUTHORIZED PERSON IS PROHIBITED BY LAW.

AUTHOR
F. J. Kempf

ISSUING FILE

CIRCULATING COPY
RECEIVED 300 AREA
FEB [illegible] 1965
RETURN TO
TECHNICAL INFORMATION FILES

THIS DOCUMENT MUS[redacted]EFT UNATTENDED OR WHE[redacted]UTHORIZED PERSON [redacted] TO IT. WHEN NO[redacted] IT MUST BE STORED IN A[redacted] LOCKED REPOSITORY [redacted] GUARDED AR[redacted]LE IT IS YOUR POSSESS[redacted]NTIL YOU HAVE OBTAI[redacted]ED RECEIPT [redacted] CLASSI[redacted]ES, IT IS YOUR RESPO[redacted] TO KEEP IT AND ITS [redacted] WITHIN THE LI[redacted] THI[redacted]CT AND FROM ANY UNAU[redacted] PERSON. ITS TRANSMI[redacted] AND STORAGE AT [redacted]LACE [redacted]IDENCE IS PROHIBITE[redacted] NOT TO BE DUPLICAT[redacted]ADDITIONAL COPIES [redacted]EQUIRED, [redacted]AIN THEM FROM TH[redacted] ISSUING FILE. ALL PE[redacted]ADING THIS DOCUMENT [redacted]REQUESTED [redacted]O SIGN IN THE SPACE P[redacted]DED BELOW.

ROUTE TO:	PAYROLL NO.	LOCATION	FILES ROUTE DATE	SIGNATURE AND DATE
~~F. J. KEMPF~~	~~20789~~	~~328~~		
BNW				
[redacted]	[illegible]	[illegible]	[illegible]	[illegible] 2/5/6[illegible]

MASTER

DISTRIBUTION OF THIS DOCUMENT IS UNLIMITED

DECLASSIFIED

54-3000-340 (3-57) AEC-GE RICHLAND, WASH.

[redacted]
(CLASSIFICATION)

DECLASSIFIED

[redacted]

RL-REA-279

DESIGN TEST REQUEST No. 1263
K REACTOR GRAPHITE KEY AND VSR CHANNEL SLEEVE TEST

By

F. J. Kempf

Reactor Design Operation
Design Engineering Sub-Section
Facilities Engineering Section

This document Classified by F. J. Kempf

This document consists of 32 [redacted]

December 10, 1964

[redacted]

[redacted] disclosure of its con[redacted]ner to an [redacted]

Classification Cancelled and Changed To
DECLASSIFIED
By Authority of RM Iten
4-18-94, CG-PR-2
By J E Savely 4-21-94
Verified By M Hanson, 4-21-94

HANFORD ATOMIC PRODUCTS OPERATION
RICHLAND, WASHINGTON

NOTICE

This report was prepared for use within General Electric Company in the course of work under Atomic Energy Commission Contract AT(45-1) - 1350, and any views or opinions expressed in the report are those of the author only. This report is subject to revision upon collection of additional data.

LEGAL NOTICE

This report was prepared as an account of Government sponsored work. Neither the United States, nor the Commission, nor any person acting on behalf of the Commission:

A. Makes any warranty or representation, expressed or implied, with respect to the accuracy, completeness, or usefulness of the information contained in this report, or that the use of any information, apparatus, method, or process disclosed in this report may not infringe privately owned rights; or

B. Assumes any liabilities with respect to the use of, or for damages resulting from the use of any information, apparatus, method, or process disclosed in this report.

As used in the above, "person acting on behalf of the Commission" includes any employee or contractor of the Commission, or employee of such contractor, to the extent that such employee or contractor of the Commission, or employee of such contractor prepares, disseminates, or provides access to, any information pursuant to his employment or contract with the Commission, or his employment with such contractor.

DECLASSIFIED

[redacted]

54-3000-366 (8-61) AEC-GE RICHLAND WASH

[redacted] RL-REA-279

DISTRIBUTION

1. W. K. Alexander
2. T. W. Ambrose
3. C. R. Barker
4. R. S. Bell
5. R. G. Clough
6. M. L. Faught
7. E. J. Filip
8. J. M. Goff
9. S. M. Graves
10. R. S. Hammond
11. H. W. Heacock
12. J. W. Hedges
13. D. L. Hovorka
14. R. T. Jessen
15. F. J. Kempf
16. A. R. Maguire
17. W. W. McIntosh
18. R. Nilson
19. R. S. Peterson
20. R. W. Reid
21. A. Russell
22. A. P. Vinther
23. E. A. Wegener
24. 300 Files
25. Record Center
26-31. Extra Copies

DECLASSIFIED

[redacted]

DESIGN TEST REQUEST NO. 1263

K REACTOR GRAPHITE KEY AND VSR CHANNEL SLEEVE TEST

December 10, 1964

Prepared by F. J. Kempf

F. J. Kempf, Engineer
Reactor Design Operation
Design Engineering Sub-Section
Facilities Engineering Section

Approved by R. S. Peterson

R. S. Peterson, Supervisor
Reactor Design Operation
Design Engineering Sub-Section
Facilities Engineering Section

Approved by E. A. Wegener

E. A. Wegener, Supervisor
Equipment Laboratory and Testing
Equipment Development Sub-Section
Facilities Engineering Section

[redacted]

DECLASSIFIED

I. TITLE

K Reactor Graphite Key and VSR Channel Sleeve Test

II. OBJECT OF TEST

1. Determine the coefficient of friction between two adjacent layers of K Reactor graphite at room temperature.

2. Determine the average load required to cause failure of an unirradiated K Reactor side reflector bar, when subjected to tensile loading applied through the reflector keys.

3. Determine the average load at failure and the average deflection at failure of a single VSR channel key when loaded in keyways with clearances equal to those used in original stack construction.

4. Determine the average load and deflection required to break the four K Reactor VSR keys when loaded simultaneously in both "3-layer" and "7-layer" mockups. Also determine the mode of key failure; i.e., shear, flexure or combined compression and bending. Following these key rupture tests, determine the strength and deflection characteristics of the proposed K Reactor VSR channel sleeve when loaded in a manner identical to that used to fracture the keys.

5. Determine the average load and deflection at failure of both the proposed K Reactor VSR channel sleeves and the proposed C Reactor sleeves when subjected to crushing loads.

DECLASSIFIED

6. Determine the extent of damage to the proposed K Reactor VSR channel sleeve when subjected to the following vertical rod loading conditions.

   a) Full rod drop in a channel mockup which has been misaligned 2-1/2 inches.

   b) Full rod drop in a channel which has been misaligned an amount equal to the maximum flexibility of a "universal" VSR.

III. BACKGROUND AND JUSTIFICATION

Alternate theories have been advanced to explain the causes of graphite stack distortion at the K Reactors. These theories, while explaining much of the observed distortion phenomena, must be supplemented with mockup test data before final acceptance. Mockup tests are believed to be the best method of determining the mode of key failure, and both the value of the load and the magnitude of key deflection at failure. For example, the calculated load required to cause key failure is low if the key can fail in flexure and relatively high if only shear loads are assumed to act on the key. Performing key rupture tests in a mockup will provide a visual demonstration of the manner in which keys can be loaded in the reactor and should determine whether keyway clearances are sufficient to allow flexural loading to rupture the keys.

Mockup tests can also determine the ability of the K Reactor graphite reflector bars to withstand tilting forces which are generated near the top of the side reflector by the observed tendency for these regions

DECLASSIFIED

to lean toward the center of the reactor. This test will provide rupture strength data on unirradiated graphite bars of the material from which the K Reactor moderator stacks were constructed. These data, coupled with the known strength of the unirradiated graphite, will allow calculation of stress concentration or rupture factors which can be used in calculating the loads at which the irradiated reactor graphite bars will fail.

Graphite sleeves, fabricated from material having essentially twice the strength of the usual nuclear graphites, are being evaluated for the VSR channel liner application. Mockup testing will determine the amount of lateral channel distortion which can occur before maximum stack forces can be applied to the sleeve column, and will determine the ability of the sleeves to resist rod impact loads. These tests will also determine the sleeve strength when loaded in a fashion similar to that causing key rupture.

IV. PROPOSED METHOD AND DATA REQUIRED

Note: Before performing each of the following tests, measure with a micrometer the cross-sectional dimensions of each bar, key and keyway to verify that the graphite has been machined within the dimensional tolerances indicated on the referenced drawings. Record the location and value of each measurement. Also calibrate any gages used in measurment of applied loads.

DECLASSIFIED

A. Coefficient of Friction Test

Determine the room temperature coefficient of friction between bars numbered 37 and bars 1 and 3 (Figure I). Remove the key in the lower keyway of bars numbered 37 and raise the bottom two layers in Figure I on an inclined plane. Determine the coefficient of friction by measurement of the inclined plane angle at which sliding between bars 37 and bars number 1 and 3 first occurs.

B. Side Reflector Bar Test

The purpose of this test is to determine the value of tensile loading, applied through the reflector keys, which causes failure of bar #37 at the keyway.

Procedure:

1. Stack the graphite bars indicated on Figure I. Reference drawings are as follows

   H-1-23001 -- Cut to 24 ± 1/16 inches long (6 pieces)

   H-1-23003 -- Cut to 24 ± 1/16 inches long (6 pieces)

   H-1-23037 -- (9 pieces)

   H-1-23055 -- Cut to 24 ± 1/16 inches long (10 pieces)

   Material: Grade SGBF graphite.

2. Apply a load sufficient to overcome frictional resistance in the mockup and to place bar #37 in tension. Note any tendency of the keys to rotate or trip in the keyways and record any observed

DECLASSIFIED

major points of contact between the keys and bar #37. Remove the load. Repeat this loading and unloading step two or three times without loading bar #37 to failure.

3. Apply the load in an incremental fashion to failure of bar #37. Record the load increments, the total load, and any observed displacement of bar #37 after each application of incremental load.

4. Perform the above steps 2 and 3 to produce:
   a) Two tests with three bars #37 placed side by side as indicated on Figure I.
   b) Three tests of single bar #37 loading.

C. Single Key Rupture - Deflection Tests

These tests are to determine the mode of VSR channel key failure, the value of the load causing single key failure and the value of key deflection at failure.

Procedure (a)

1. Stack four graphite bars with a key connecting the top and bottom bars as indicated on Figure II. Reference drawings are as follows:

   H-1-23009 -- (4 pieces, two of which are required in Procedure (b) below)

   H-1-23055 -- Cut to 12 ± 1/16 inches long (6 pieces).

DECLASSIFIED

Spacer block between bars number 9 can be any 3.751 ± .002 inch square, 20-inch long graphite material (2 pieces required).

2. Apply a load sufficient to overcome frictional resistance in the mockup and to load the key. Note any tendency of the key to move from the keyway. Observe and record the major points of contact between the key and the loading block. Remove the load. Repeat this loading and unloading step two or three times without loading the key to failure.

3. Apply a unidirectional load in incremental fashion to failure of the key. Record the load as a function of key deflection from a fixed reference point.

4. Perform the above steps 2 and 3 on three key specimens.

Procedure (b)

Repeat the above steps 1, 2 and 3 of Procedure (a) but with the load applied through the spacer block as indicated on Figure II-A.

Procedure (c)

1. The mockup for this test shall be constructed as indicated in Figure III. The purpose of the test is to simulate the type of loading which could be applied to a full length K Reactor VSR key as a result of the vertical bowing induced by top reflector subsidence. Reference drawings and sketches are as follows:

DECLASSIFIED

H-1-23055 -- Key K-1 -- 12 pieces

Sketch 1 (attached) -- 7 pieces

Material: Grade SGBF graphite

2. Apply a load sufficient to overcome the frictional resistance of the mockup without the key K-1 in place. Record the value of this load.

3. Place the key K-1 in the center keyway of the mockup. Apply the load and measure, from a fixed reference point, the displacement of the loading bar to the point of initial key loading. Reverse the direction of load application and repeat the preceding displacement measurements. The fixed reference location shall be the point at which the key and the bars containing the keyways (Sketch 1) are perpendicular; i.e., the no-key-load position of the mockup. Observe and record the points of contact between the key and keyways.

4. Apply a unidirectional load, in an incremental fashion, to failure of key K-1. Record the load increments, the rupture load, the displacement of the loading bar from the fixed reference point, and the key deflection near three adjacent points of load application.

5. Repeat steps three and four above to produce key rupture data on:

   a) four keys in the center keyway

DECLASSIFIED

b) four keys in the top keyway

c) four keys in the bottom keyway.

Procedure (d)

Using the Figure III mockup, but with supports and method of load application modified as indicated on Figure IV, load three keys K-1 to failure. Record the load increments, the rupture load, the displacement of the loading bar from the no load position, and the deflection of the key at the points indicated on Figure IV.

D. Three Layer Mockup -- Key and Sleeve Load Deflection Tests

These tests are to determine rupture strength and deflection data for both the installed keys and the graphite sleeves, proposed for application at the K Reactors, when subjected to various non-uniform loading conditions.

Procedure (a)

1. Stack twelve graphite bars with keys connecting the top and bottom bars as indicated on Figure V. Reference drawings and sketches are as follows:

   H-1-23009 -- Modified as on Sketch 2 attached

   H-1-23030 -- Modified as on Sketch 3 attached

   H-1-23015 -- Modified as on Sketch 4 attached

   H-1-23112 -- Modified as on Sketch 5 attached

   H-1-23121 -- Modified as on Sketch 6 attached

   H-1-23055 -- Cut to 12 ± 1/16 inches inches (16 pieces)

DECLASSIFIED

2. Apply a uniform load across the top three filler layer bars with the bottom layer of the mockup restricted as indicated by Figure V. Record the load increments, the key deflection from a fixed reference point at no load, and the failure load. Note whether the keys fail individually or simultaneously. If the keys fail one at a time, record the key failure sequence.

3. Perform step 2 above on three different sets of keys to obtain an average value of key rupture strength and to check the consistency of the failure sequence.

4. Upon completion of step 3 above, install new keys and a graphite sleeve (SK-1-23651) as shown on Figure V-A and repeat the load application to failure of both the keys and the sleeve. Repeat the key deflection and load measurements of step 2 above. Perform step 4 on 3 graphite sleeves.

E. Seven Layer Mockup -- Key and Sleeve Load Deflection Tests

These tests are similar in purpose to those conducted with the three layer mockup. The additional mockup height will, however, allow installation of longer keys and more sleeves, thereby more closely simulating reactor key loading and any interaction effects between adjacent sleeves. These tests should also determine if the sleeves have sufficient strength to cause further key rupture when the load is applied above a slip plane.

DECLASSIFIED

Procedure (a)

1. Construct a mockup as indicated on Figure VI. The material from the three-layer mockup may also be used for the seven-layer mockup. The reference drawings and sketches will be essentially the same as those delineated for assembly of the three-layer mockup. However, key length will be 27 ± 1/16 inches long and 12 additional sleeves (SK-1-23651) fabricated from grade 711TSXYL graphite must be obtained.

2. Apply a uniform load across the top three layers of the keyed mockup, with the bottom three layers restrained as indicated by Figure VI. (The sleeves will not be inserted in the channel during this portion of the test.) Record the load versus load plate displacement to failure of the keys. If the keys fail at essentially the same value determined during the three-layer mockup tests, this test need be conducted only once. If the keys fail at loads significantly different from those determined in the three-layer mockup test, perform the test with three different sets of keys to obtain average key rupture strength data.

3. Replace the broken keys and insert three sleeves in the channel. Repeat the application of load as indicated in Figure VI until rupture of both the keys and the centrally located sleeve.

DECLASSIFIED

Record the load versus load plate displacement until sleeve centrally located sleeves have failed. (Note: the top and bottom sleeves in the mockup are not expected to fail.)

4. Repeat step 3 above, but with grade 711TSXYL graphite sleeves inserted in the mockup. Break three sleeves, recording the load versus displacement data previously outlined.

Procedure (b)

1. The mockup indicated on Figure VI will be used for this test but the keying, load and anchor arrangement will be as indicated on Figure VI-A. Keys will be installed in all four vertical keyways in the mockup but each key shall be cut at the interface between layer four and layer five prior to mockup assembly.

2. Apply the load to the top three layers of the mockup, allowing these layers to slip with respect to the bottom four layers. Record the load and displacement of the load plate from the point at which the sleeves first become loaded. Also record any displacement of the second, third and fourth layers which may occur as the sleeve is loaded to failure. Note whether keys in the bottom four layers fail before the sleeve fails.

3. Replace all broken keys and sleeves and repeat step 2 a minimum of three times.

DECLASSIFIED

4. If the keys in the bottom four layers break before the test sleeves, install grade 711TSXYL graphite sleeves in the mockup and repeat steps 2 and 3 above.

5. If the test sleeves fail before rupture of the keys in the bottom four layers, increase the length of the spacer block in the bottom of the channel to 7-1/2 inches and repeat steps 2 and 3 above.

F. Sleeve Strength Under Crushing Type Loads

This series of tests will provide strength data on the grade H-205-85 graphite sleeves for comparison with test data previously obtained on lower strength grade 711TSXYL and grade TSX graphite sleeves.

Procedure (a)

1. Load two grade H-205-85 graphite sleeves (SK-1-23651) to failure, recording the load versus displacement to rupture as indicated on Figure VII.

2. Repeat step 1 above, but with the load applied as indicated on Figure VII-A.

Procedure (b)

1. Load two grade H-205-85 graphite sleeves (SK-1-5512, Rev. 2) to failure, recording the load versus deflection to rupture, as indicated on Figure VIII.

DECLASSIFIED

2. Repeat step 1 above, but with the load applied as indicated on Figure VIII-A.

G. Sleeve Test in VSR Mockup

This series of tests are to demonstrate the ability of the proposed graphite VSR channel sleeves to resist vertical rod impact loads. The proposed sleeves are of higher strength than those previously evaluated by Design Test #1137, but they may also possess greater brittleness and therefore be more susceptible to rod impact damage. The purpose of this portion of the test program is also to determine whether the sleeves will remain intact until channel distortion has progressed to the limit of installed vertical rod flexibility.

The following test shall be performed first on the K Reactor VSR channel sleeves (SK-1-23651) and then on the C Reactor VSR channel sleeves (SK-1-5512, Rev. 2).

Procedure

This test will consist of dropping a 2.245-inch OD "universal" flexible VSR 18 feet into a non-plumb channel mockup approximately six feet long. The rod will be allowed to strike the sides of the sleeve column segments. The sleeve segments shall be misaligned with respect to the VSR as shown on Figure IX. Before dropping the rod into the channel, lower and raise the rod slowly to verify that the rod does not bind when contacting the sides of the sleeves, or strike the upper edge of the top test sleeve in the mockup.

DECLASSIFIED

Following the initial rod drop, the test sleeves shall be inspected for damage with a borescope. If no damage is evident the rod drops shall be repeated at least 100 times or until damage occurs. Periodic sleeve inspections shall be conducted during the 100 drop test. If damage is evident following the initial rod drop, the damaged sleeves shall be removed for further inspection and undamaged liner sections installed.

Rod drops shall be continued until the sleeve is completely broken or sufficient damage has occurred to interfere with rod insertion. Record the number of drops required to render the sleeves unusable. Photographs shall be taken of representative sections of damaged liner.

Repeat the above procedure with the mockup distorted an amount approaching the limits of vertical rod flexibility.

V. DIVISION OF RESPONSIBILITY

Equipment Laboratory and Testing, EDO, will provide space, manpower, instrumentation and mockups necessary for the key, sleeve, and rod drop tests.

Reactor Design will provide the sleeve segments to be tested. Reactor Design will also be responsible for evaluating the results of the tests.

DECLASSIFIED

VI. REPORTS REQUIRED

A final report, containing the results of the testing program, shall be issued by Equipment Laboratory and Testing within one month following completion of the tests. The results of individual tests are expected to be available for evaluation as each test is completed.

VII. SCHEDULES REQUIRED

Since the results of these tests will provide a significant basis for budget action on the graphite distortion problem, the proposed testing completion date is established as March 1, 1965.

VIII. REACTOR DESIGN CONTACTS

R. S. Peterson, 762 Building, 700 Area, Phone 6-5195.

F. J. Kempf, 328 Building, 300 Area, Phone 3042.

IX. ESTIMATED COST

$5,000.

DECLASSIFIED

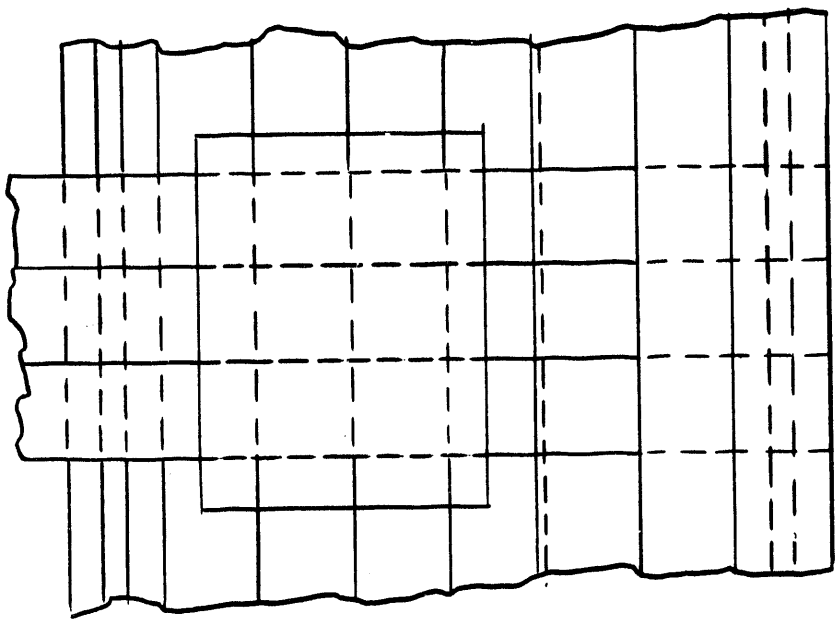

TOP

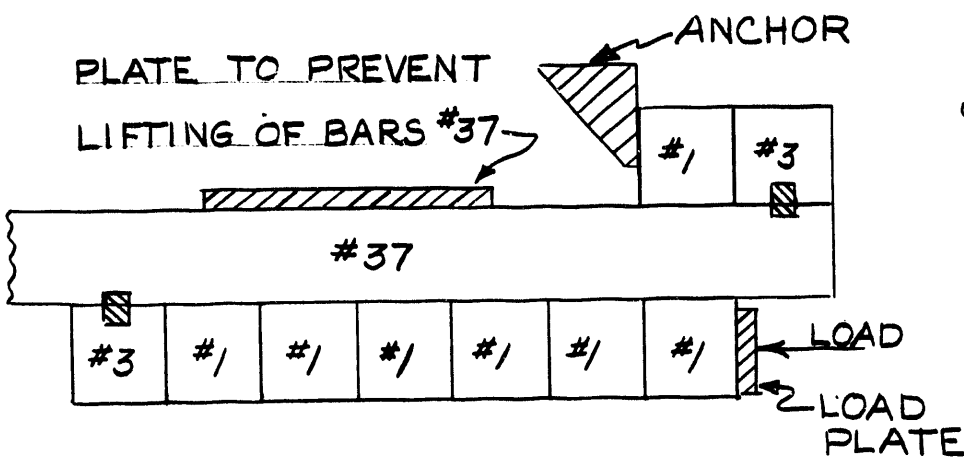

SIDE

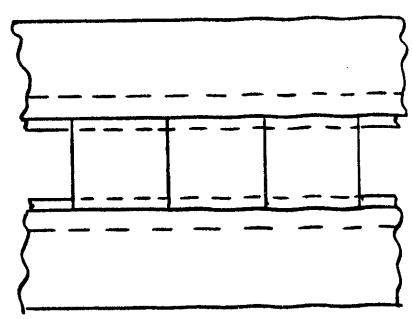

END

DECLASSIFIED

FIGURE I

SIDE REFLECTOR BAR TEST

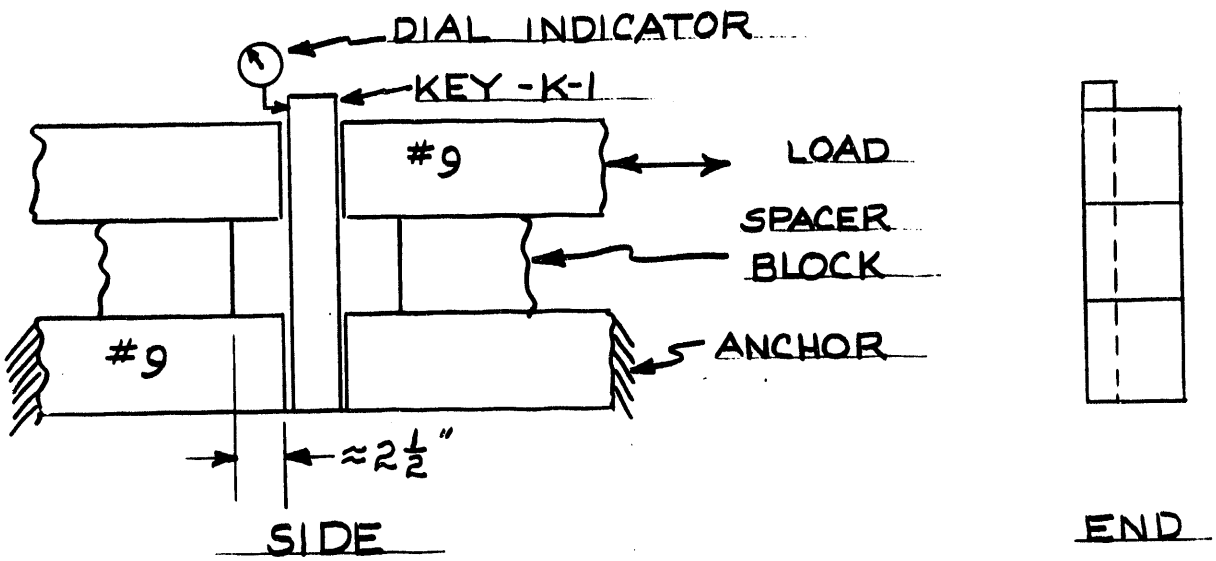

FIGURE II

SINGLE KEY RUPTURE TEST

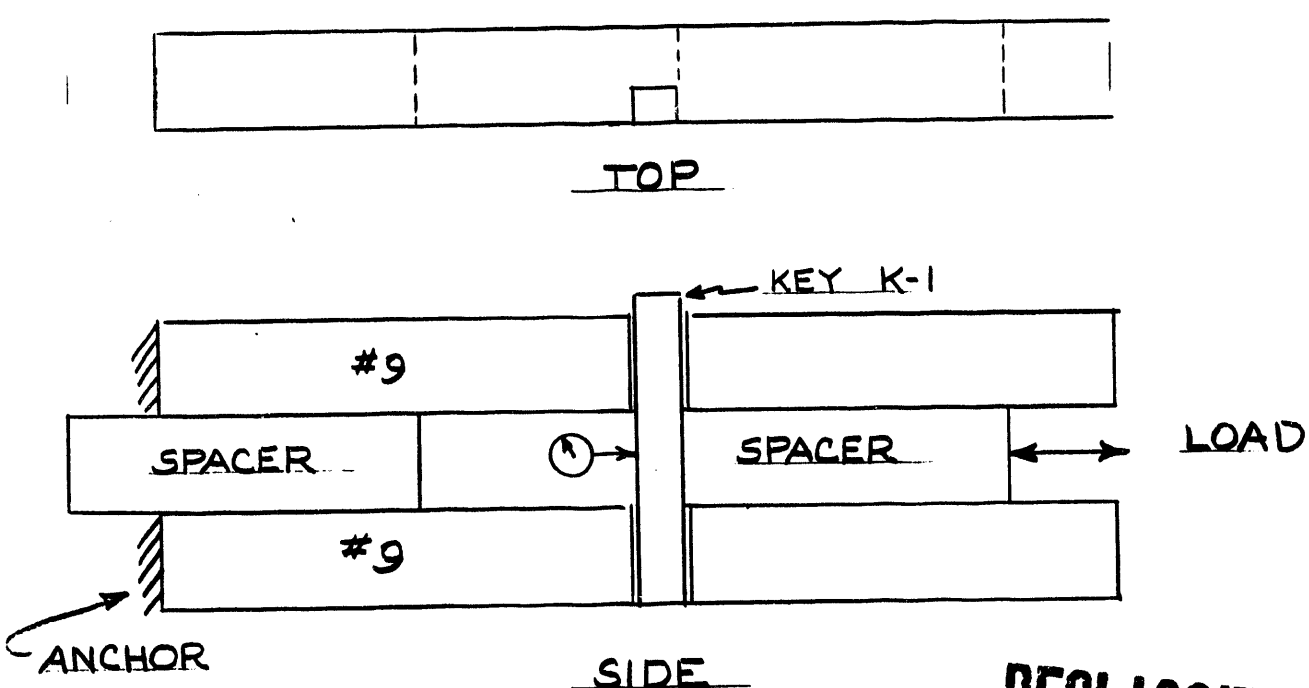

DECLASSIFIED

FIGURE II-A

SINGLE KEY RUPTURE TEST

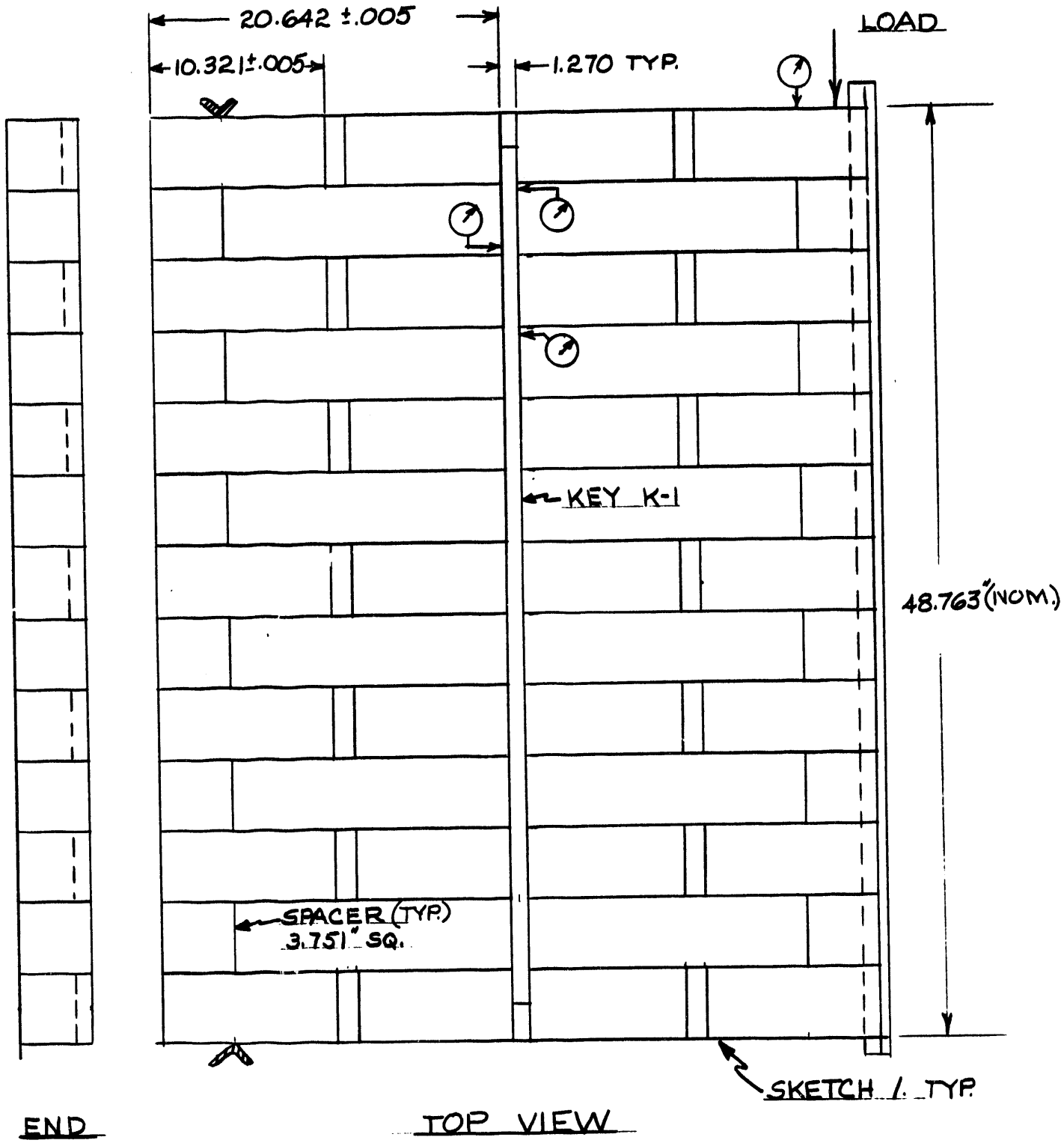

FIGURE III

DECLASSIFIED

MAT'L. SGBF GRAPHITE

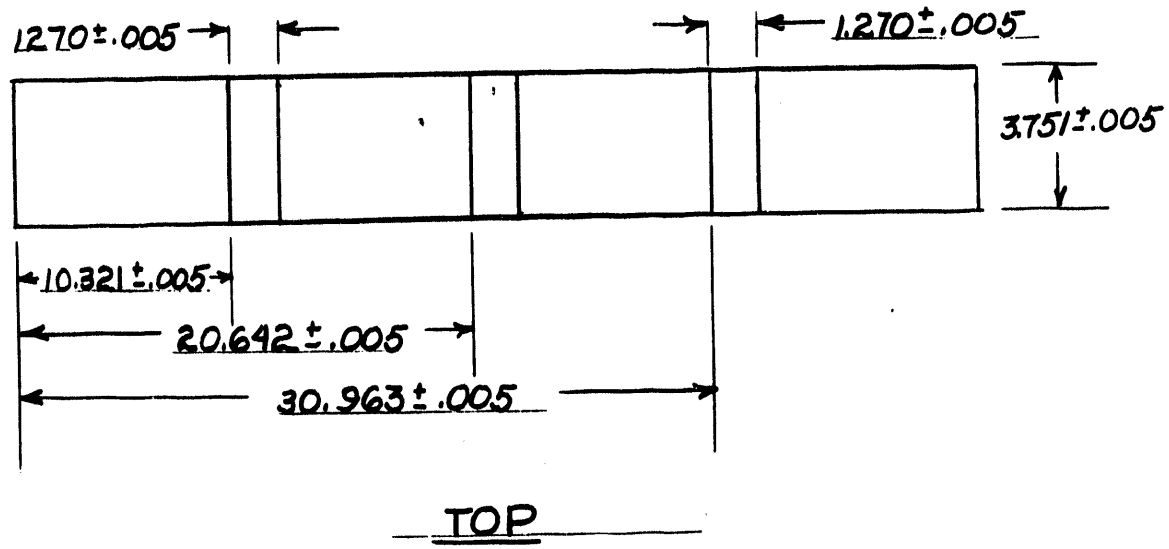

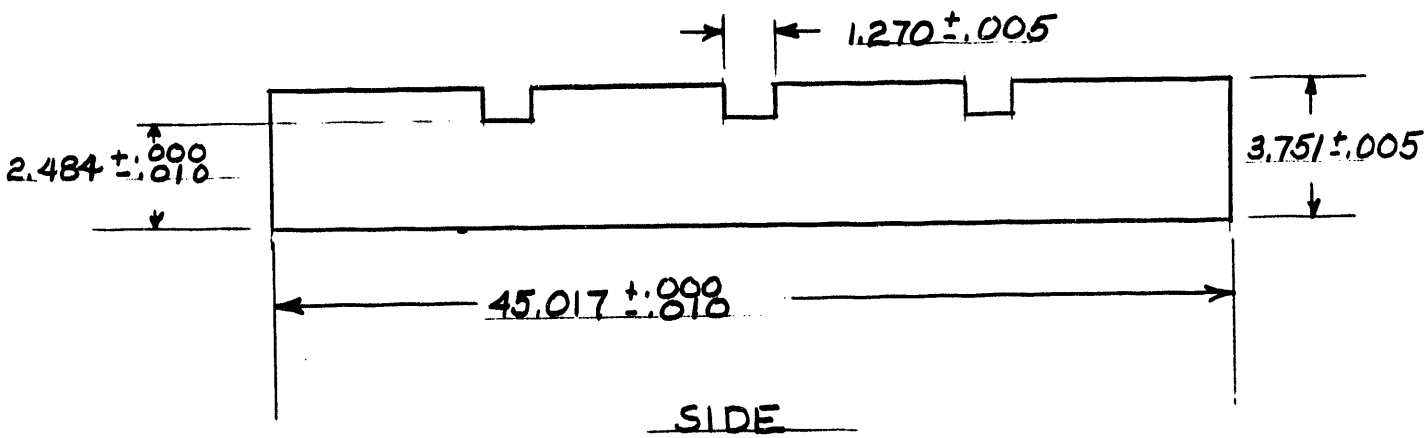

SKETCH - 1 -

(BLOCK #9 - H-1-23009 - MODIFIED - 7 PCS. REQ)

DECLASSIFIED

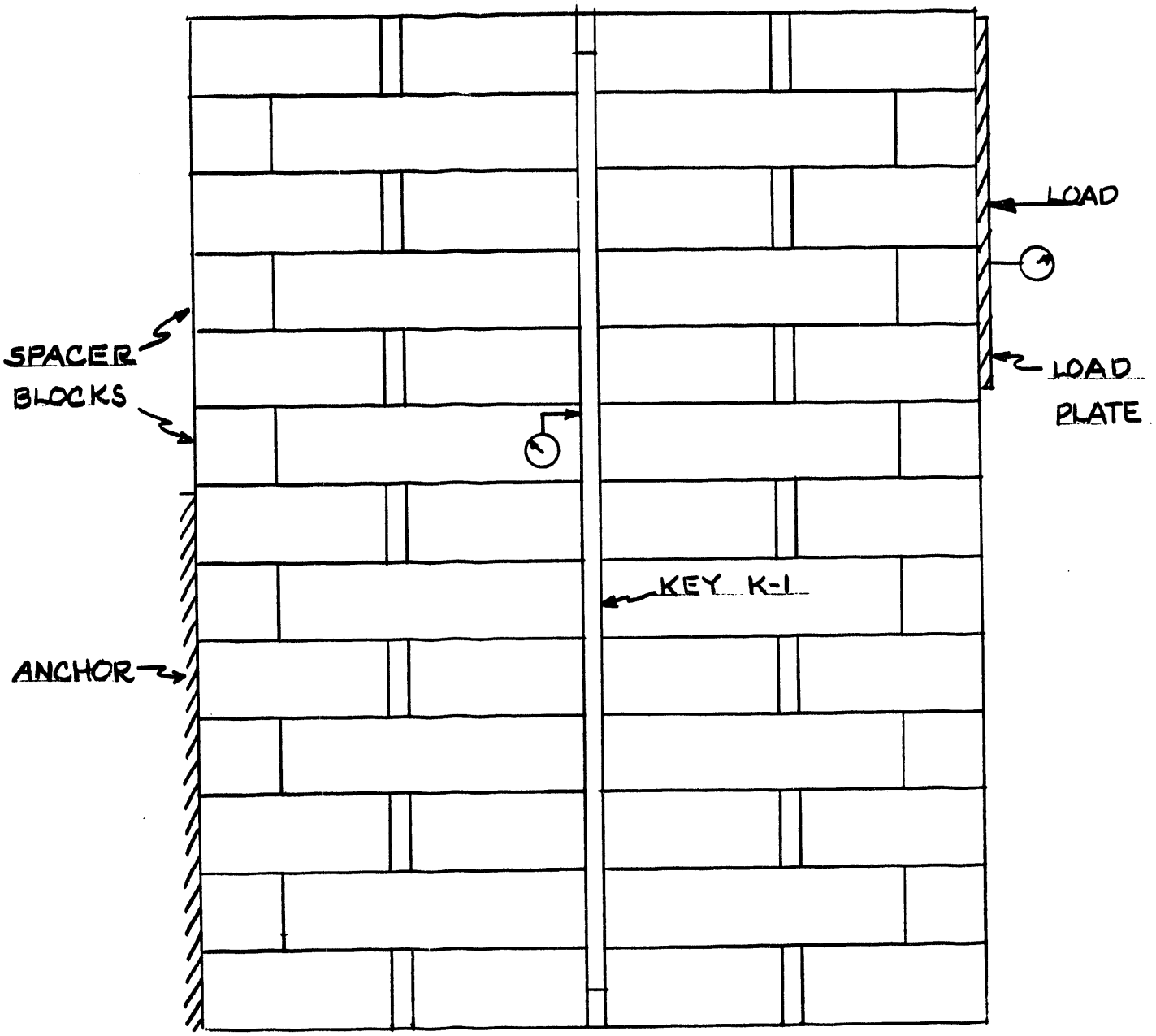

TOP VIEW

FIGURE IV

DECLASSIFIED

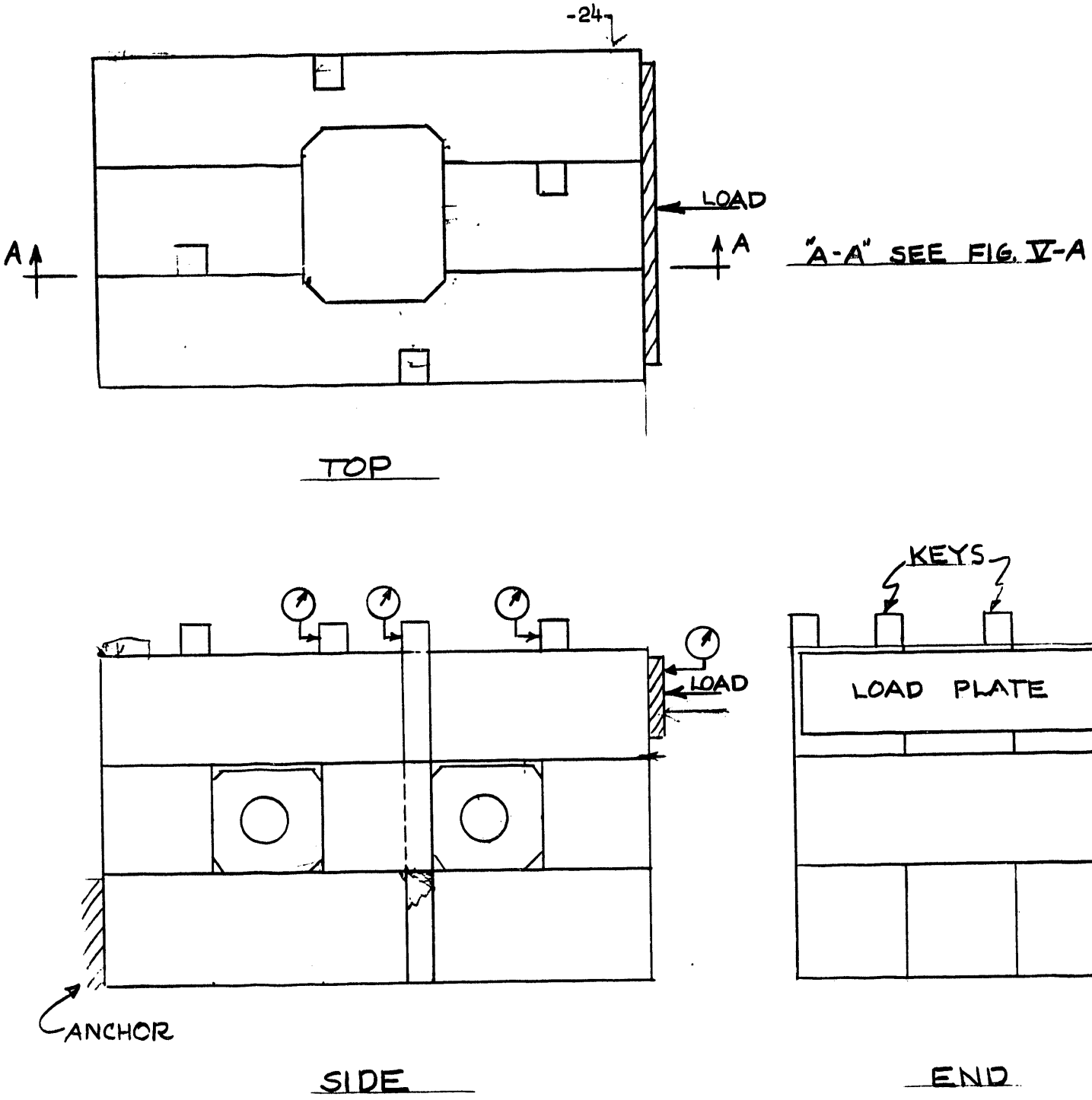

FIGURE V

3-LAYER MOCKUP

DECLASSIFIED

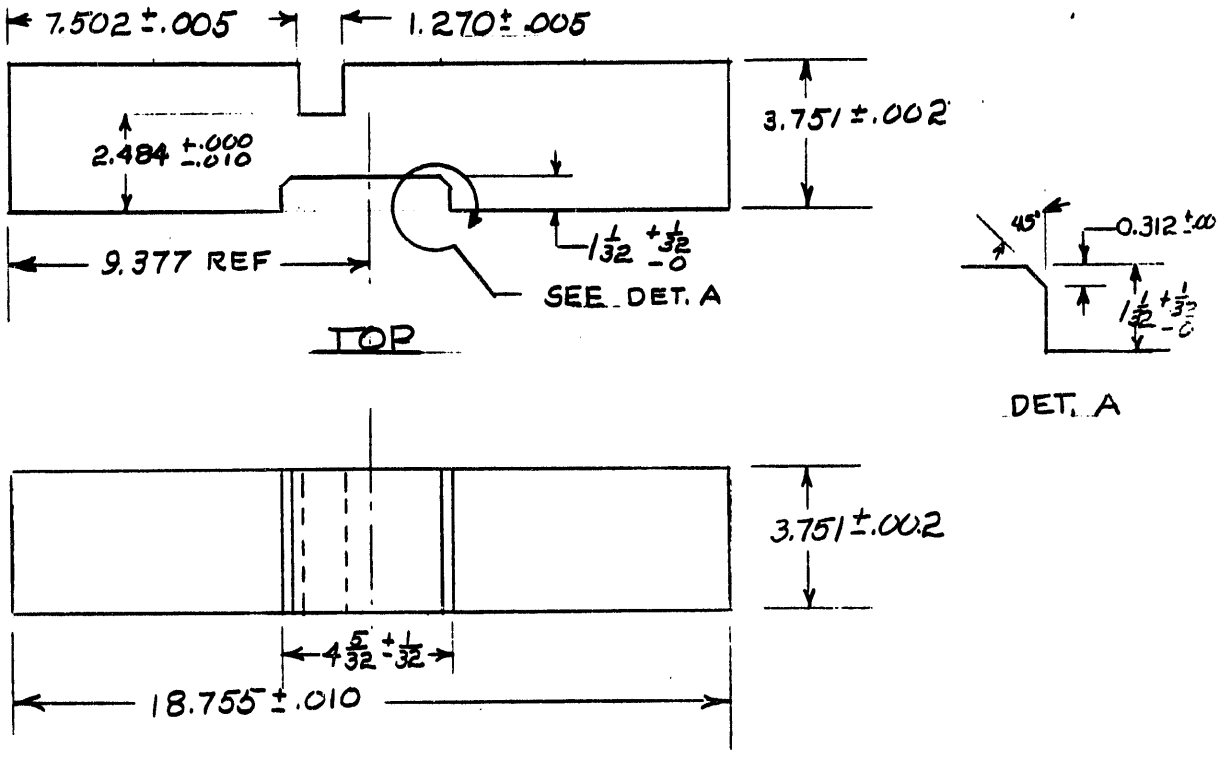

SKETCH -2-

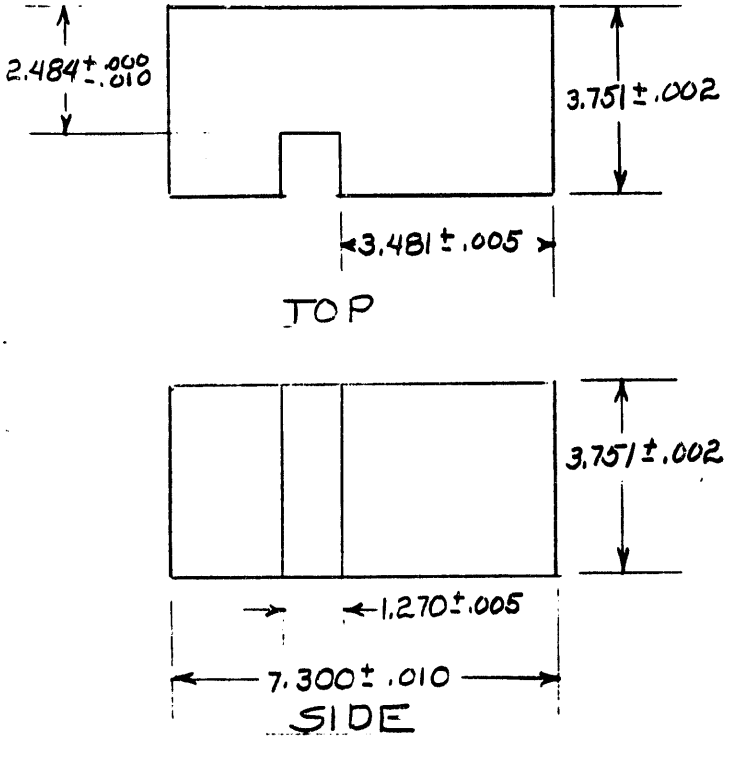

SKETCH -3-

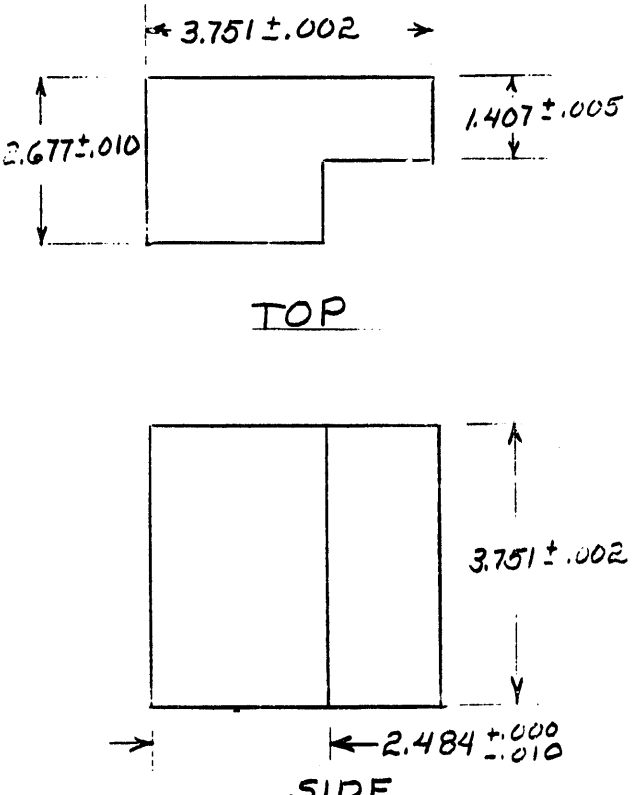

SKETCH -4-

DECLASSIFIED

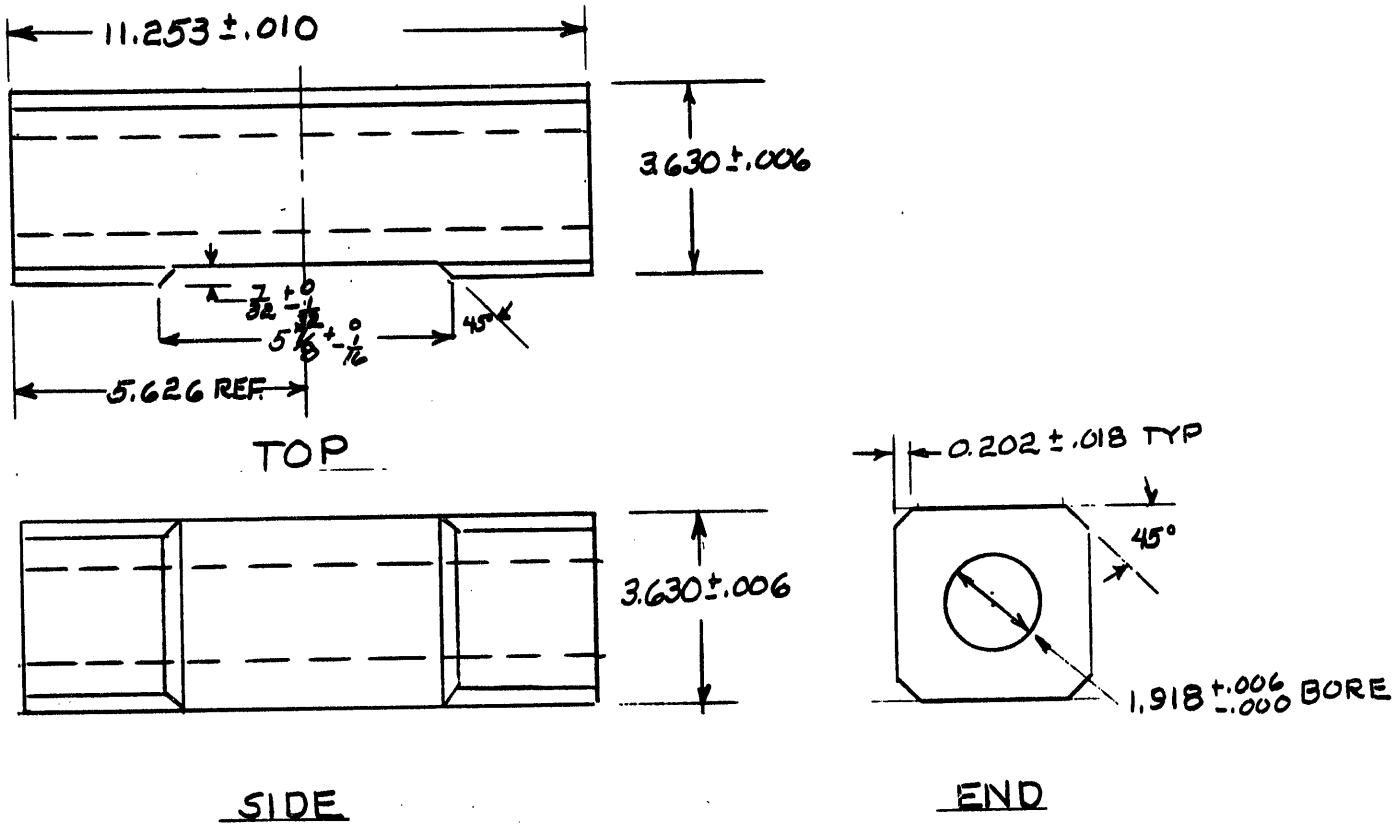

SKETCH - 5 -

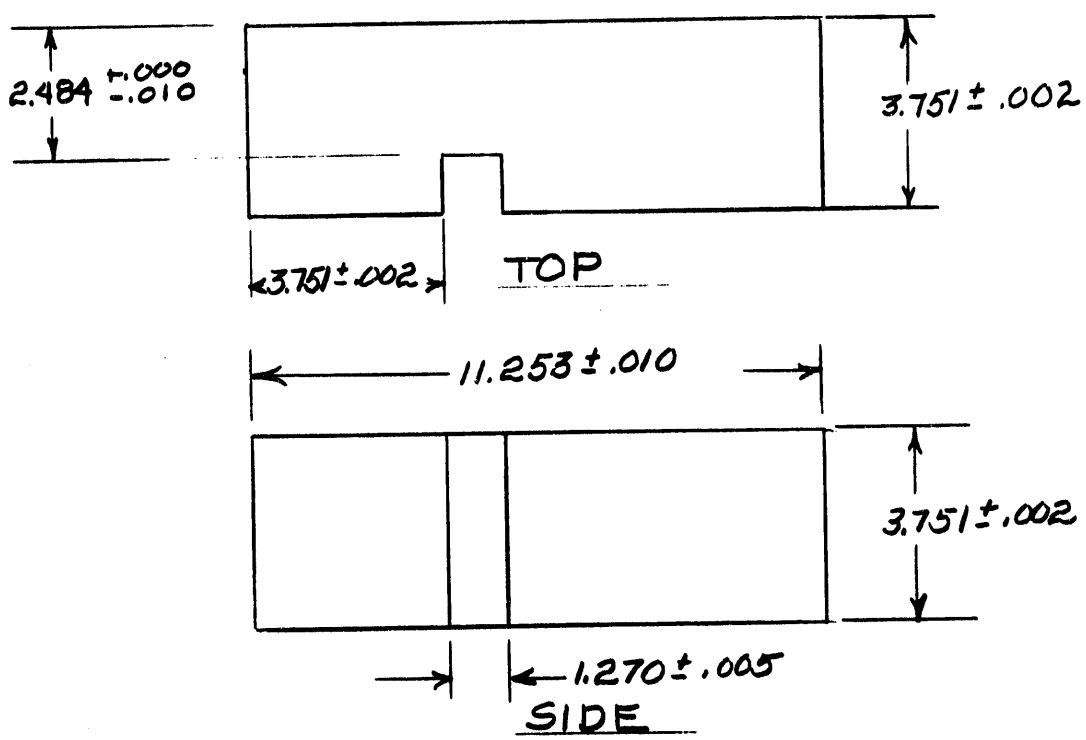

SKETCH - 6 -

DECLASSIFIED

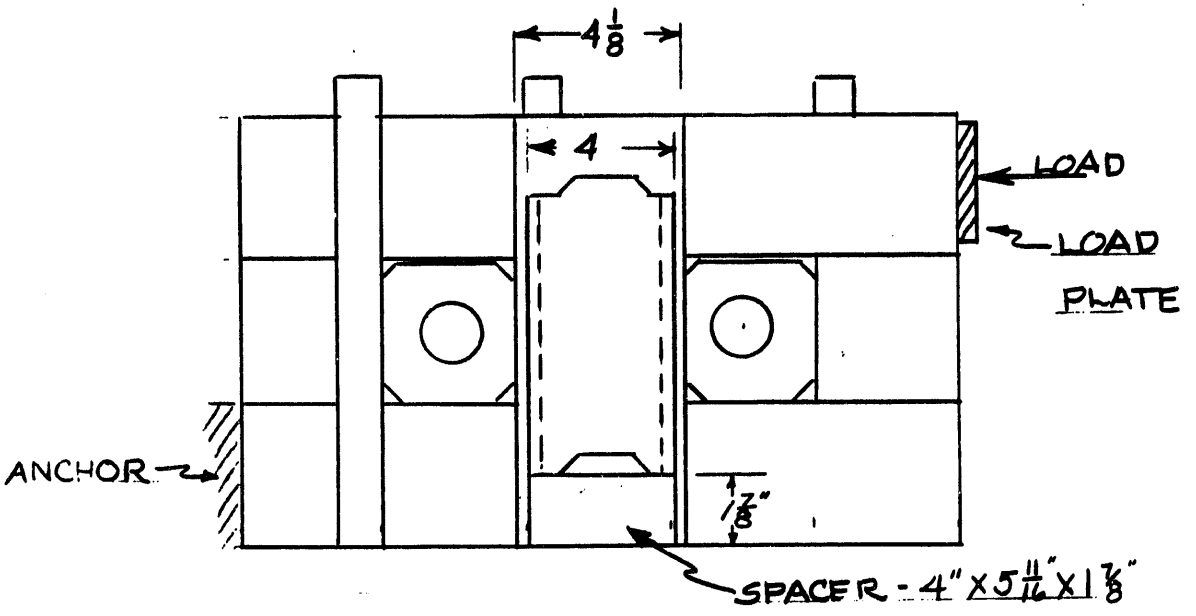

FIGURE V-A

(SECTION "A-A" FROM FIGURE V
BUT WITH SLEEVE & SPACER INSTALLED)

DECLASSIFIED

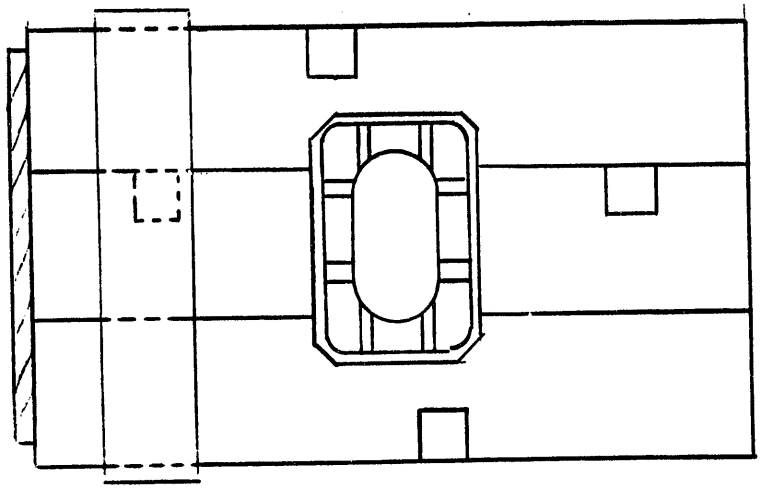

TOP

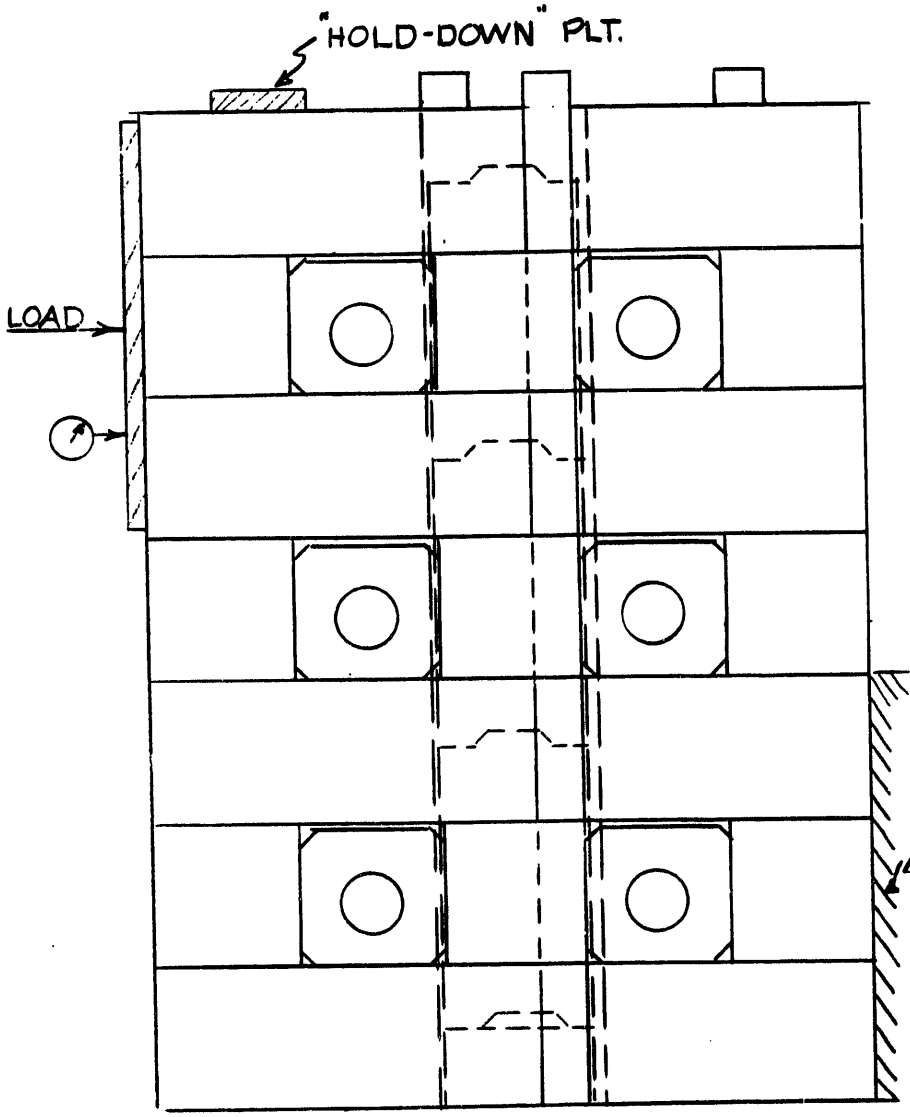

SIDE

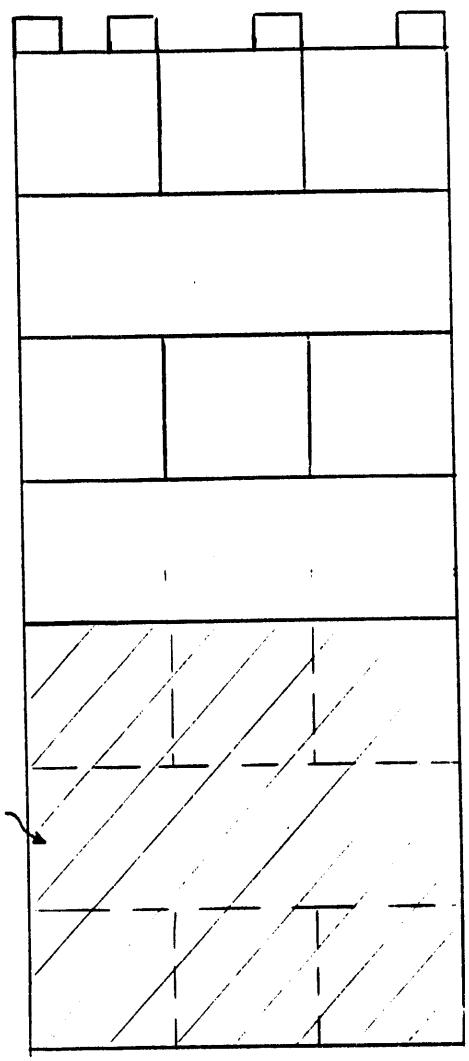

END

FIGURE VI

[redacted]

DECLASSIFIED

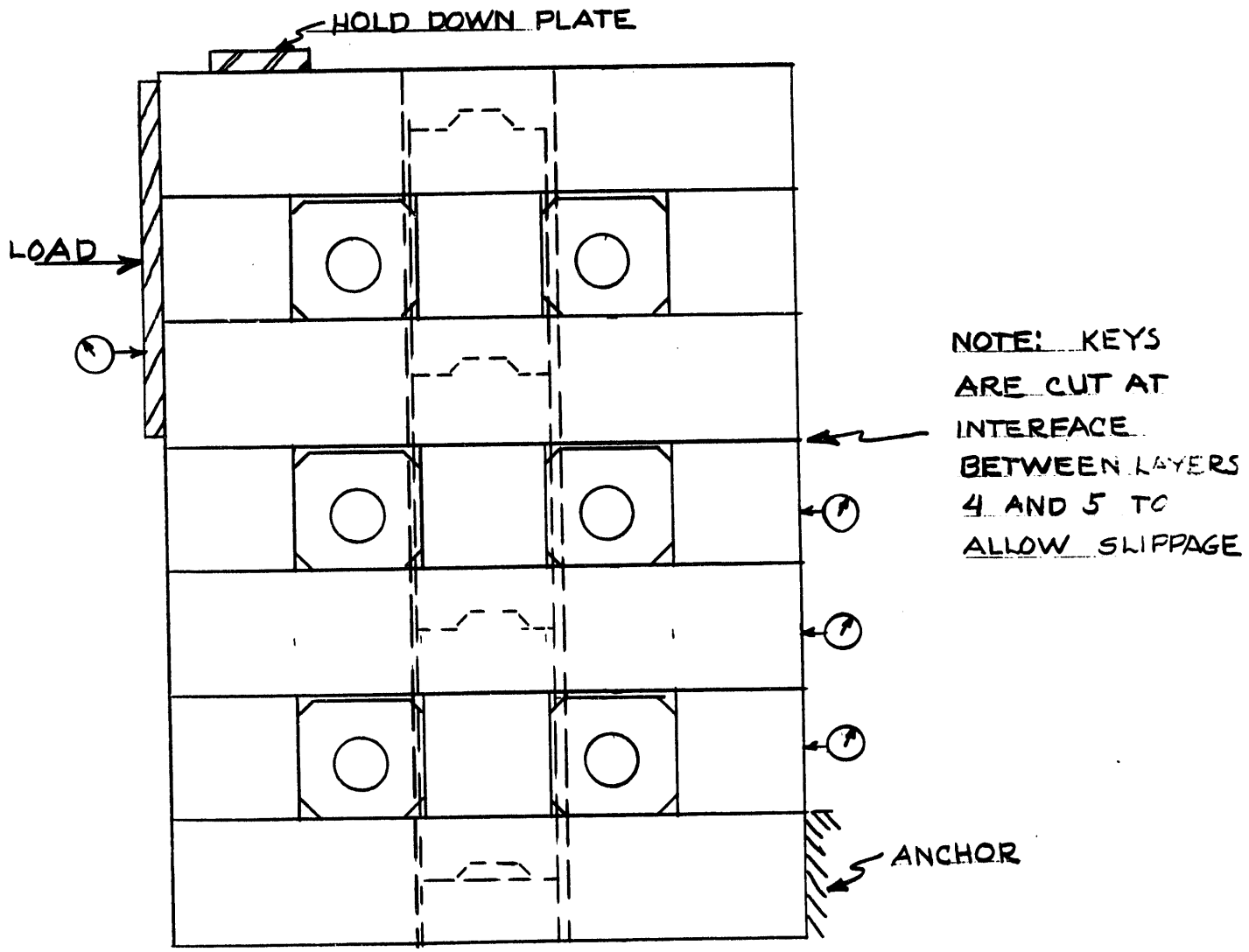

SIDE VIEW

FIGURE VI-A

DECLASSIFIED

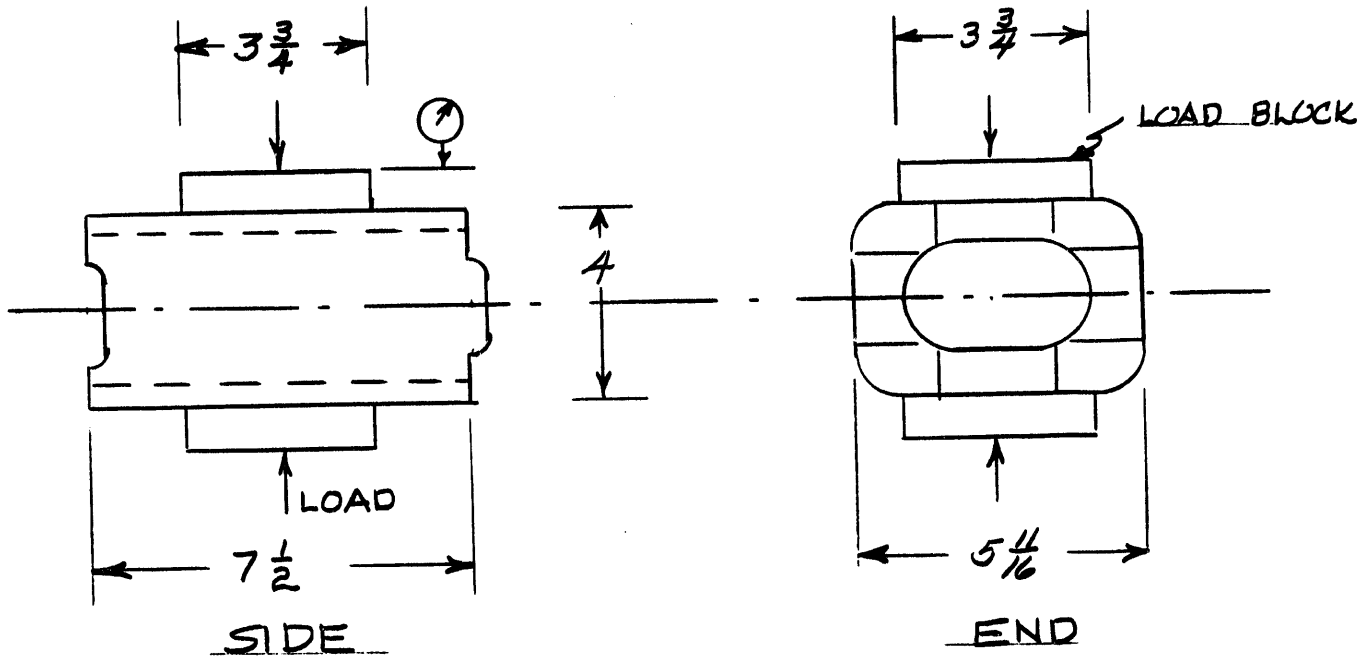

FIGURE VII -(K- SLEEVE)

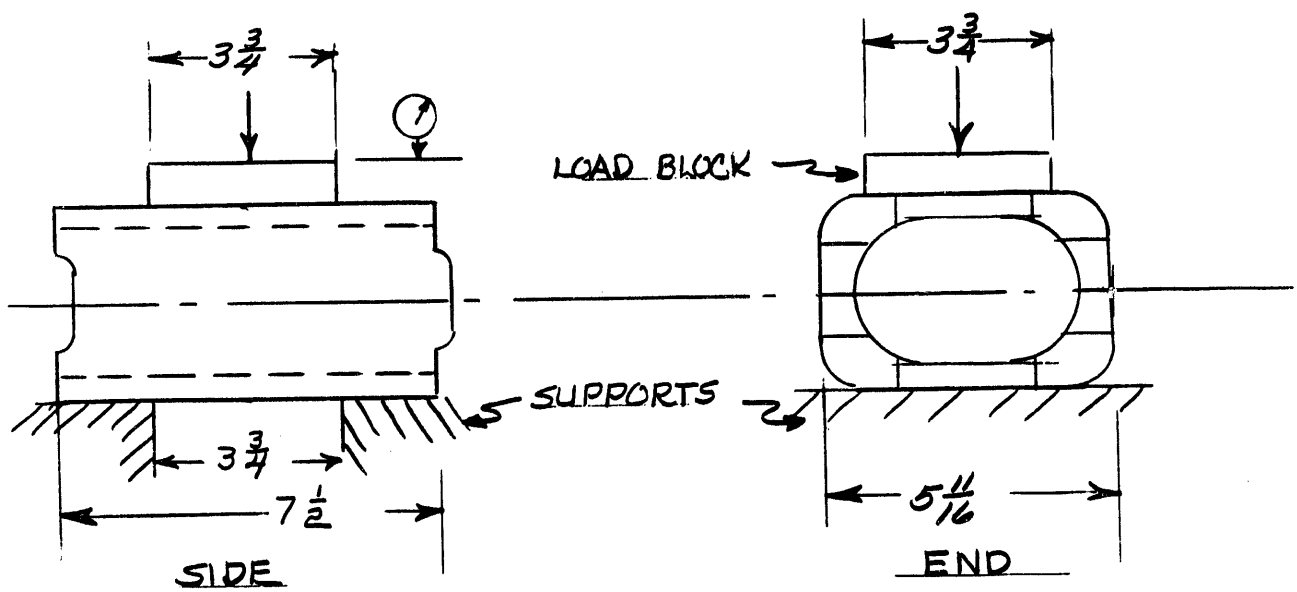

FIGURE VII-A (K-SLEEVE)

DECLASSIFIED

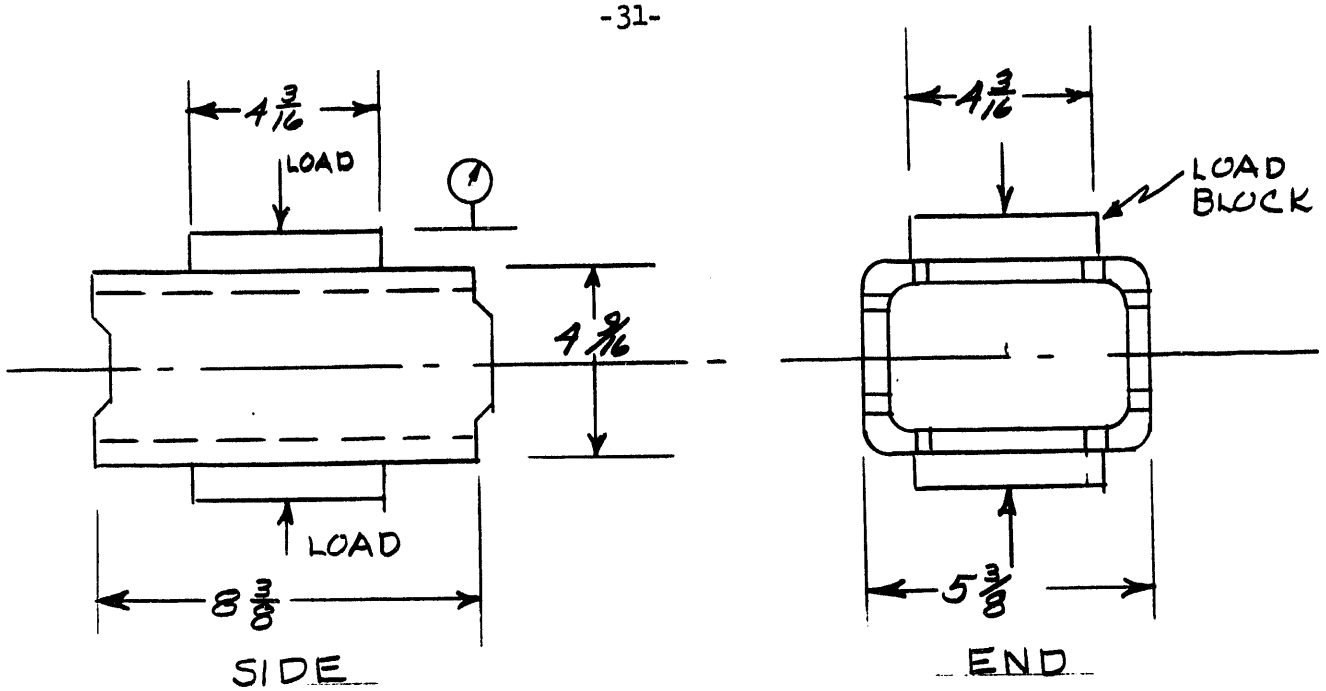

FIGURE VIII (C-SLEEVE)

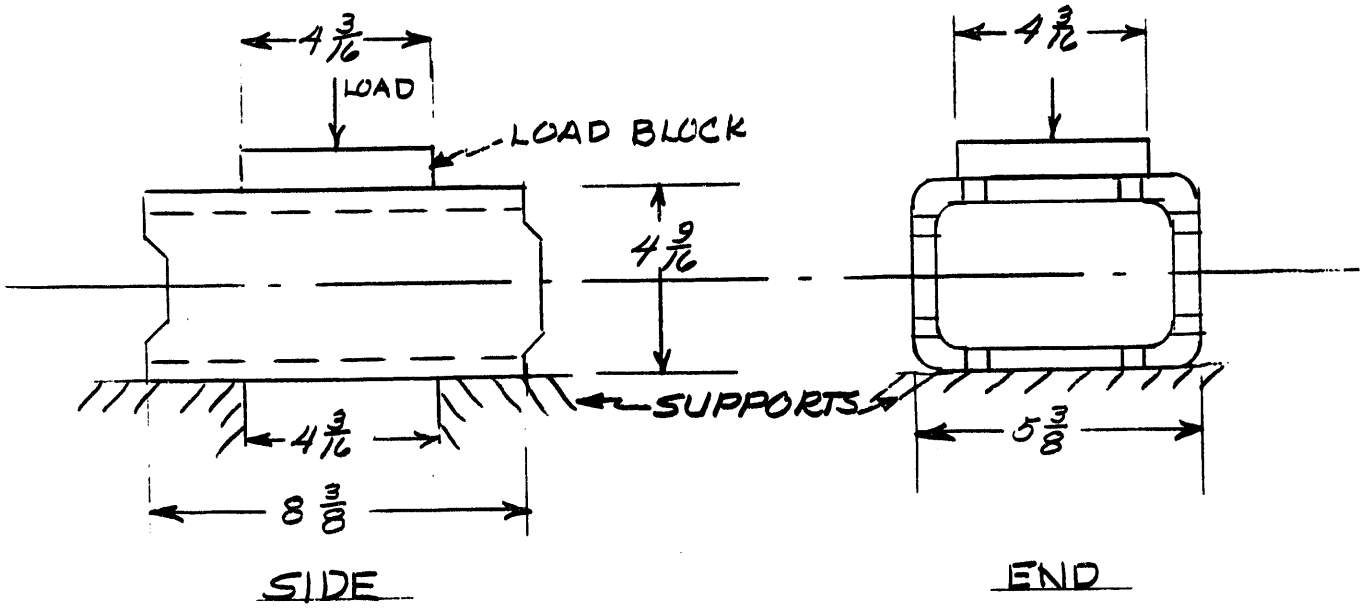

FIGURE VIII-A (C-SLEEVE)

DECLASSIFIED

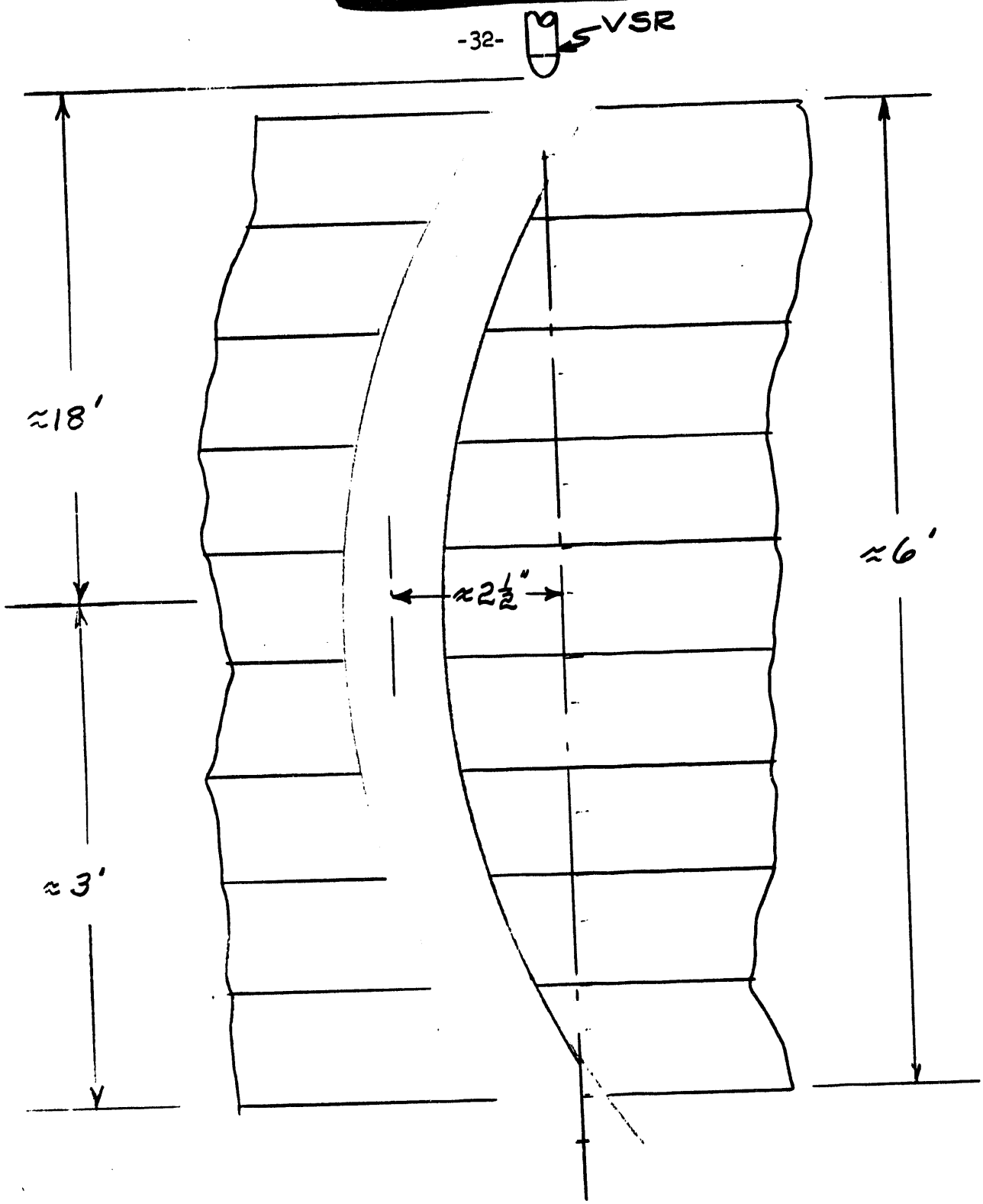

FIGURE IX

(ROD DROP INTO MISALIGNED CHANNEL)

DECLASSIFIED

DATE FILMED

9/23/94

END