Association for Information and Image Management
1100 Wayne Avenue, Suite 1100
Silver Spring, Maryland 20910
301/587-8202

Centimeter

Inches

MANUFACTURED TO AIIM STANDARDS
BY APPLIED IMAGE, INC.

1 of 1

DOE/MC/29254--3783
(DE94004148)
Distribution Category UC-132

Commercialization of Waste Gob Gas and Methane Produced in Conjunction with Coal Mining Operations

Final Report
August 1992 - December 1993

Work Performed Under Contract No.: DE-FG21-92MC29254

For
U.S. Department of Energy
Office of Fossil Energy
Morgantown Energy Technology Center
P.O. Box 880
Morgantown, West Virginia 26507-0880

By
Resource Enterprises, Inc.
360 Wakara Way
Salt Lake City, Utah 84108

December 1993

ACKNOWLEDGMENTS

The authors wish to acknowledge the support of the U.S. Department of Energy, Morgantown Energy Technology Center (DOE) for co-sponsoring the subject project. In particular, the authors appreciate the assistance provided by Messrs. Harold Shoemaker and Charles Byrer of DOE. The authors also acknowledge the contributions made by Ms. Dina Kruger of the U.S. Environmental Protection Agency, Global Change Division, and The Appleby Group, pertaining to environmental aspects of gob gas and methane commercialization.

The authors extend particular gratitude to the following organizations for their cooperation and support, and the information provided regarding nitrogen rejection and other gas clean-up processes:

- Advanced Extraction Technologies, Inc., Houston, Texas
- Nitrotec Engineering Co., Linthicum, Maryland
- UOP, Houston, Texas

TABLE OF CONTENTS

Page

Disclaimer i
Title Page ii
Acknowledgments iii
Table of Contents iv
List of Tables and Figures v
Executive Summary vi
1.0 Introduction and Background 1
2.0 Gas Resource Associated with Mining 3
2.1. Gaseous Mines in the U.S. 3
2.2. Degasification Methods 4
2.2.1. Gob Wells 5
2.2.2. In-Seam Boreholes 7
2.2.3. Vertical Wells 8
2.2.4. Gas Injection 8
2.2.5. Summary of Degasification Methods 9
2.3. Methane Ownership 10
2.4. Methane Resource 10
3.0 Evaluation of Gas Utilization Alternatives 11
3.1. Conversion Technologies 11
3.1.1. Hydrocarbon Synthesis 11
3.1.2. Shell Middle Distillate Process 13
3.1.3. A Gob Gas Conversion Process 14
3.1.4. Process Economics 16
3.1.5. Methanol Production 17
3.1.6. Mixed Alcohols 19
3.1.7. Ammonia Synthesis 19
3.1.8. Production of Acetic Acid 20
3.1.9. Biological Conversion of Methane to Methanol 20
3.1.10. Summary of Conversion Technologies 21
3.2. Enrichment Technologies 22
3.2.1. Cryogenic Process 23
3.2.2. Pressure Swing Adsorption (PSA) 25
3.2.3. Selective Absorption Process 27
3.2.4. Rejection of Other Impurities and Integrated Strategies 28
3.2.5. Environmental Considerations 30
3.2.6. Economic Evaluation 31
3.3. Summary of Gas Conversion and Enrichment Evaluations 31
4.0 Gas Gathering Considerations 33
5.0 Example Coal Mine Characteristics 35
6.0 Summary 37
7.0 References 41

LIST OF TABLES AND FIGURES

Tables **Page**

Table 1. Survey Estimate of U.S. Coal Mines Employing Degasification Systems 3
Table 2. Summary of Costs for the Production of Hydrocarbons from Gob Gas 16
Table 3. Estimated Production Costs for Large and Small Methanol Plants 18
Table 4. Typical Gob Gas Composition and Required Pipeline Composition 22
Table 5. General Characteristics of Example Coal Mines 35
Table 6. Market and Logistical Considerations for Gob Gas Commercialization 35

Figures

Figure 1. Typical Gob Well 5
Figure 2. Longwall Mining Effects on Adjacent Strata 6
Figure 3. Comparison of Gob Gas Recovery Methods 7
Figure 4. Gas Injection Flow Diagram 9
Figure 5. General Diagram for Production of Hydrocarbons/Chemicals from Gas 12
Figure 6. The Shell Middle Distillate Process for the Production of Hydrocarbons from Natural Gas 14
Figure 7. A Conceptual Process for the Conversion of Gob Gas to Hydrocarbon Fuels 15
Figure 8. Block Diagrams Depicting the Production of Methanol from Natural Gas 17
Figure 9. Block Diagram for Ammonia Synthesis from Natural Gas 20
Figure 10. Schematic of a Process for the Biological Conversion of Methane to Methanol 21
Figure 11. Schematic of a Cryogenic Process 24
Figure 12. Schematic of a PSA Process 26
Figure 13. Schematic of a Selective Absorption Process 27
Figure 14. Integrated Strategy for Gob Gas Enrichment Using PSA for Nitrogen Rejection 29
Figure 15. Integrated Strategy for Gob Gas Enrichment Using Solvent Extraction for Nitrogen Rejection 30

EXECUTIVE SUMMARY

An immense gas resource is being vented to atmosphere from coal mines throughout the world which is a waste of an energy supply and may be deleterious to the environment. Resource Enterprises, Inc. (REI) has identified potential commercial applications for utilization of the "waste" gas, the obvious of which involved direct combustion processes. The Public Utility Regulatory Policies Act of 1978 created a favorable environment in the U.S. to develop independent electric power generation projects. This directed REI's initial focus toward power production. However, depressed economic conditions in industrialized areas (especially coal producing regions) caused a surplus of generating capacity and ultimately resulted in REI's investigation of non-electric alternatives for commercializing methane produced in conjunction with coal mining operations. This led to the subject project, co-sponsored by the U.S. Department of Energy, Morgantown Energy Technology Center (DOE) and REI.

REI was the project manager and prime contractor for the project. REI subcontracted the University of Utah Chemical and Fuels Engineering Departn.ent and other specialists to assist REI in its evaluation of various gas conversion and enrichment technology options. The primary objectives of the project were to identify and evaluate existing processes for: (i) using gas as a feedstock for production of marketable, value-added commodities, and (ii) enriching contaminated gas to pipeline quality. The technology alternatives considered under both the conversion and enrichment scenarios were required to accommodate relatively low volumes of gas flow (e.g., 1-5 MMscfd), and varying gas quality (e.g., 50-90% methane).

The following gas conversion technologies were evaluated: (i) transformation to liquid fuels, (ii) manufacture of methanol, (iii) synthesis of mixed alcohols, and (iv) conversion to ammonia and urea. All of these involved synthesis gas production prior to conversion to the desired end products. Most of the conversion technologies evaluated were found to be mature processes operating at a large scale. A drawback in all of the processes was the need to have a relatively pure feedstock, thereby requiring gas clean-up prior to conversion. Despite this requirement, the conversion technologies were preliminarily found to be marginally economic. However, the prohibitively high investment for a combined gas clean-up/conversion facility required that REI refocus the project to investigation of gas enrichment alternatives.

Enrichment of a gas stream with only one contaminant is a relatively straightforward process (depending on the contaminant) using available technology. However, gob gas has a unique nature, being typically composed of five constituents. These components are: methane, nitrogen, oxygen, carbon dioxide and water vapor. Each of the four contaminants may be separated from the methane using existing technologies that have varying degrees of complexity and compatibility. However, the operating and cost effectiveness of the combined system is dependent on careful integration of the clean-up processes.

The nitrogen rejection unit was determined to be the most critical and costly component of the system. Three technologies were identified as potentially being suitable: (i) cryogenics, (ii) selective absorption, and (iii) pressure swing adsorption (PSA). The cryogenic process is very sensitive to the presence of impurities and, therefore, was considered to be inappropriate. Both the selective absorption and PSA processes were assessed to be acceptable. The overall hydrocarbon recoveries in both processes are similar, and the capital and operating costs are also comparable. A primary difference between the selective absorption and PSA processes is their ability to handle oxygen. The selective absorption process requires oxygen removal prior

to nitrogen rejection, whereas PSA removes most of the oxygen during the separation process. Therefore, the process involving PSA is less complex. However, caution must be exercised in designing a PSA nitrogen rejection system to ensure that gas mixtures passing through the explosive range are handled properly.

The oxygen separation component added complexity to the integrated gas enrichment concept. Catalytic combustion was the process determined to be the best suited for the gob gas application and could be performed adiabatically or at lower temperatures using hydrogen as additional fuel. The adiabatic approach was favored due to safety and cost considerations. Technologies for carbon dioxide and water removal are well established. If required, carbon dioxide rejection may be accomplished using an amine absorption process, membrane separation or PSA process. Both the amine and membrane processes were determined to be suitable. The PSA process was anticipated to still be experimental in nature and not as mature as the other alternatives. Therefore, PSA is initially not recommended for carbon dioxide rejection. Conventional water removal techniques (e.g., glycol dehydration, membrane separation, etc.) were considered to be adequate.

In summary, the gas enrichment system design that is expected to be the most favorable from both technical and economic viewpoints is an integrated facility consisting of: (i) a PSA or solvent absorption nitrogen rejection unit (with the PSA system having some advantage over the solvent extraction process), (ii) a catalytic combustion deoxygenation process, (iii) an amine or membrane carbon dioxide removal system, and (iv) a conventional dehydration unit. An economic evaluation of a PSA-based gas enrichment system indicated favorable results. Using conservative model input parameters, an after-tax internal rate of return exceeding 20% was projected (assuming 100% equity financing). REI is pursuing Phase 2 of this project for demonstration of a waste gas enrichment facility using the approach described above. This is expected to result in the validation of the commercial and technical viability of the facility, and the refinement of design parameters.

1.0 INTRODUCTION AND BACKGROUND

Methane contained in coal seams has plagued coal producers for centuries due to safety problems caused by gas emissions into underground workings. To cope with this problem, mine operators dilute methane concentrations by circulating large volumes of air through ventilation systems and vent gas to atmosphere through gob ventilation boreholes and other methane drainage systems. Unfortunately, most of this gas is contaminated with air and/or is inaccessible to pipelines. As a result, the resource has generally been regarded as unsuitable or uneconomic for use as a primary energy source.

A vast resource is presently being vented to atmosphere from coal mines throughout the world. For example, in 1988 an estimated 183 to 282 billion cubic feet (Bcf) of methane was liberated from U.S. coal mining operations (representing 10-15% of worldwide methane emissions from mining).[1] Of this amount, 172 to 271 Bcf was vented to atmosphere and only 13 Bcf was utilized. This is a waste of a valuable energy resource and may be deleterious to the environment. Methane is deemed to be a large contributor to global warming since it is twenty times more effective at trapping heat in the atmosphere than carbon dioxide (over a one hundred year time frame).[1] Furthermore, methane concentrations in the atmosphere have more than doubled during the past two centuries. Therefore, the economic potential and environmental benefits that would be realized through the capture and use of methane produced in conjunction with coal mining activities are vast.

Recognizing an opportunity to exploit this gas resource, Resource Enterprises, Inc. (REI) set out to identify potential commercial applications. The obvious utilization options involved use of the gas in direct combustion processes such as electric power generation and coal drying.[2] REI's objective was to identify an alternative through which the value added to the gas resource could be maximized, thereby enhancing the economics of methane commercialization. The Public Utility Regulatory Policies Act (PURPA), enacted by the U.S. Congress in 1978, created a favorable environment to develop independent electric power generation projects in the U.S. This situation influenced REI's focus on using waste gas produced from coal mines for electric power production, and ultimately resulted in REI's formation of a venture with a gas turbine manufacturer to develop power projects at coal mine sites.[3]

However, economic conditions were very depressed throughout the industrialized areas of the U.S. during the 1980's and into the 1990's. This was especially pronounced in coal producing regions and caused a surplus of power generation capacity that discouraged electric utilities from acquiring additional supply. Although PURPA required the utilities to purchase power at their "avoided cost" of producing electricity, REI quickly discovered that perspectives on the value of avoided cost varied widely. Despite support from various sources to develop electric power generation projects using the waste resource, acceptable power sale agreements (or back-up power purchase agreements for on-site use of produced electricity) could not be secured. This situation is believed to be peculiar to conditions that existed in the U.S. at that time; power generation projects in other countries (and in the U.S. under different circumstances) may be conducive to this methane commercialization option. As a consequence of the power generation experience gained by REI, REI began investigating non-electric alternatives for commercializing methane produced in conjunction with mining.

The targeted resources were gob gas (contaminated gas produced from mined-out areas), and pipeline quality methane produced in advance of mining. Methane contained in ventilation air was only expected to have some application for use as combustion air,[4] and was disregarded due to its limited overall potential for commercialization using current gas conversion and separation technology. This pursuit resulted in a project co-sponsored by the U.S. Department of Energy, Morgantown Energy Technology Center (DOE) and REI to evaluate gas conversion and enrichment technology options.

REI was the project manager and prime contractor for the project that was initiated in late 1992. REI subcontracted the University of Utah Chemical and Fuels Engineering Department, Dr. Laszlo Heredy and other specialists to assist REI in its evaluation of gas conversion and enrichment technology options. The primary gas utilization objectives of the project were to identify and evaluate existing processes for: (i) using gas as a feedstock for production of marketable commodities, and (ii) enriching contaminated gas to pipeline quality. Satisfying the first objective was a priority since the technology would have broader application (e.g., pipeline access would not be required). The project was divided into two phases. The purpose of Phase 1 (the subject of this report) was to evaluate the gas resource associated with mining, and identify and evaluate various gas utilization technologies. Phase 2 would consist of a pilot demonstration of the technology deemed to have the most promise for commercialization of this substantial gas resource.

2.0 GAS RESOURCE ASSOCIATED WITH MINING

2.1. GASEOUS MINES IN THE U.S.

Methane plagues mine operators by adversely affecting coal mine safety and causing delays in production. Ventilation is the primary method used by operators to dilute methane concentrations in underground workings. When the capability of a ventilation system is not adequate for diluting gas concentrations to safe, mandatory levels, methane drainage techniques are employed.

Coal mining productivity continues to increase each year, primarily due to increased longwall mining and the mining of larger panels (e.g., up to 1,000 feet wide and 10,000 feet long). Increasing the dimensions of the longwall panel significantly increases the area of the affected overburden and underburden. If the disturbed strata contains coal seams or other gas bearing strata, the volume of gas migrating to the mine ventilation significantly increases. U.S. coal mines venting 5-15 MMcfd accounted for 34% of the 300 MMcfd of methane produced in 1988.[5] Coincident with the mining of larger dimension longwall panels, mines producing 5-15 MMcfd contributed to an increased 49% of the total daily methane emissions from U.S. coal mines.

Table 1 presents an estimate of U.S. coal mines implementing degasification systems. The use of surface-drilled vertical gob wells is the most commonly implemented degasification technique in the U.S. (e.g., 31 of 33 mines). Twenty of these mines also utilize in-seam methane drainage techniques, primarily consisting of cross-panel boreholes.

Table 1. Survey Estimate of U.S. Coal Mines Employing Degasification Systems

COMPANY	MINE / COALBED	BASIN	MINING METHOD (LW, CM)	DEGASIFICATION SYSTEM[1]
1. Jim Walter Resources	Blue Creek #4 / Blue Creek	Black Warrior	LW, CM	Vertical, GOB, X-Panel
2. Jim Walter Resources	Blue Creek #5 / Blue Creek	Black Warrior	LW, CM	Vertical, GOB, X-Panel
3. Jim Walter Resources	Blue Creek #7 / Blue Creek	Black Warrior	LW, CM	Vertical, GOB, X-Panel
4. Jim Walter Resources	Blue Creek #3 / Blue Creek	Black Warrior	LW, CM	Vertical, GOB, X-Panel
5. U.S. Steel Mining	Oak Grove Mine / Blue Creek	Black Warrior	LW, CM	Vertical, GOB, X-Panel
6. BethEnergy Mines	Cambria #33 / L & M Kittanning	North Appal.	LW, CM	GOB, Horizontal Gob
7. BethEnergy Mines	Eighty Four Mine / Pittsburgh	North Appal.	LW, CM	Horizontal
8. Consolidation Coal	Bailey / Pittsburgh	North Appal.	LW, CM	GOB
9. Consolidation Coal	Loveridge #22 / Pittsburgh	North Appal.	LW, CM	GOB
10. Consolidation Coal	Arkwright / Pittsburgh	North Appal.	LW, CM	GOB, Horizontal

11. Consolidation Coal	Humphrey #7 / Pittsburgh	North Appal.	LW, CM	GOB, Horizontal
12. Consolidation Coal	Osage #3 / Pittsburgh	North Appal.	LW, CM	GOB
13. Consolidation Coal	Blacksville #2 / Pittsburgh	North Appal.	LW, CM	GOB, Horizontal
14. Consolidation Coal	Robinson Run / Pittsburgh	North Appal.	LW, CM	GOB
15. Consolidation Coal	Amonate / Pocahontas #4	Central Appal.	LW, CM	GOB
16. Cyprus Emerald Resources	Emerald #1 / Pittsburgh	North Appal.	LW, CM	GOB
17. Cyprus Cumberland Res.	Cumberland Mine / Pittsburgh	North Appal.	LW, CM	GOB
18. Eastern Associated Coal	Federal #2 / Pittsburgh	North Appal.	LW, CM	GOB, Horizontal
19. U.S. Steel Mining	Pinnacle #50 / Pocahontas # 3	Central Appal.	LW, CM	GOB, X-Panel
20. U.S. Steel Mining	Shawnee / Pocahontas #3	Central Appal.	LW, CM	GOB, X-Panel
21. Costain Coal	Wheatcroft #9 / Herrin #6	Illinois	LW, CM	GOB
22. Old Ben Coal	Old Ben #25 / Herrin #6	Illinois	LW, CM	GOB
23. Old Ben Coal	Old Ben #26 / Herrin #6	Illinois	LW, CM	GOB
24. Consolidation Coal (Consol)	Buchanan #1 / Pocahontas #3	Central Appal.	LW, CM	Vertical, GOB, X-Panel
25. Consol/Island Creek	V.P. #1 / Pocahontas #3	Central Appal.	LW, CM	Vertical, GOB, X-Panel
26. Consol/Island Creek	V.P. #3 / Pocahontas #3	Central Appal.	LW, CM	Vertical, GOB, X-Panel
27. Consol/Island Creek	V.P. #5 / Pocahontas #3	Central Appal.	LW, CM	Vertical, GOB, X-Panel
28. Consol/Island Creek	V.P. #6 / Pocahontas #3	Central Appal.	LW, CM	Vertical, GOB, X-Panel
29. Garden Creek Coal	V.P. #6 / Pocahontas #3	Central Appal.	LW, CM	Vertical, GOB, X-Panel
30. Basin Resources	Golden Eagle / Maxwell	Raton	LW, CM	GOB, Horizontal
31. Cyprus Empire Coal	Eagle #5 / F Seam	Piceance	LW, CM	GOB
32. Soldier Creek Coal	S. Can. / Rck.Can., Sunnyside	Uinta	CM	Horizontal
33. Western Associated Coal	Deserado / B Seam	Piceance	LW, CM	GOB

Source - EPA, MSHA and Personal Communication.

1 Surface Vertical Gob Well = GOB
Vertical Pre-Mining Well = Vertical
In-Seam Boreholes = Horizontal
Cross-Panel Boreholes = X-Panel
In-Mine Horizontal Gob Well = Horizontal Gob

2.2. DEGASIFICATION METHODS

The following text overviews various degasification techniques including: (i) gob wells, (ii) in-seam horizontal boreholes, (iii) vertical wells installed in advance of mining, and (iv) gas injection. The first three methods are practiced in the U.S. to varying degrees. Gas injection is an innovative technique in the early stages of development for enhancement of gas recovery from vertical coalbed methane wells. It may also have potential for application to in-seam horizontal boreholes drilled from within underground coal mines.

2.2.1. Gob Wells

The use of gob wells is the most commonly practiced degasification technique in the U.S. Three to six gob wells are typically installed per longwall panel to capture and prevent gas liberated from overlying strata from migrating into the mine ventilation. Gob wells are drilled from the surface over the longwall panel initially to within about 200 feet above the mined coalbed, at which point casing is installed. The gob well is then drilled to a few feet above the mined coalbed and cased with slotted casing or left openhole. Figure 1 depicts a typical gob well installation at a northern Appalachian coal mine.

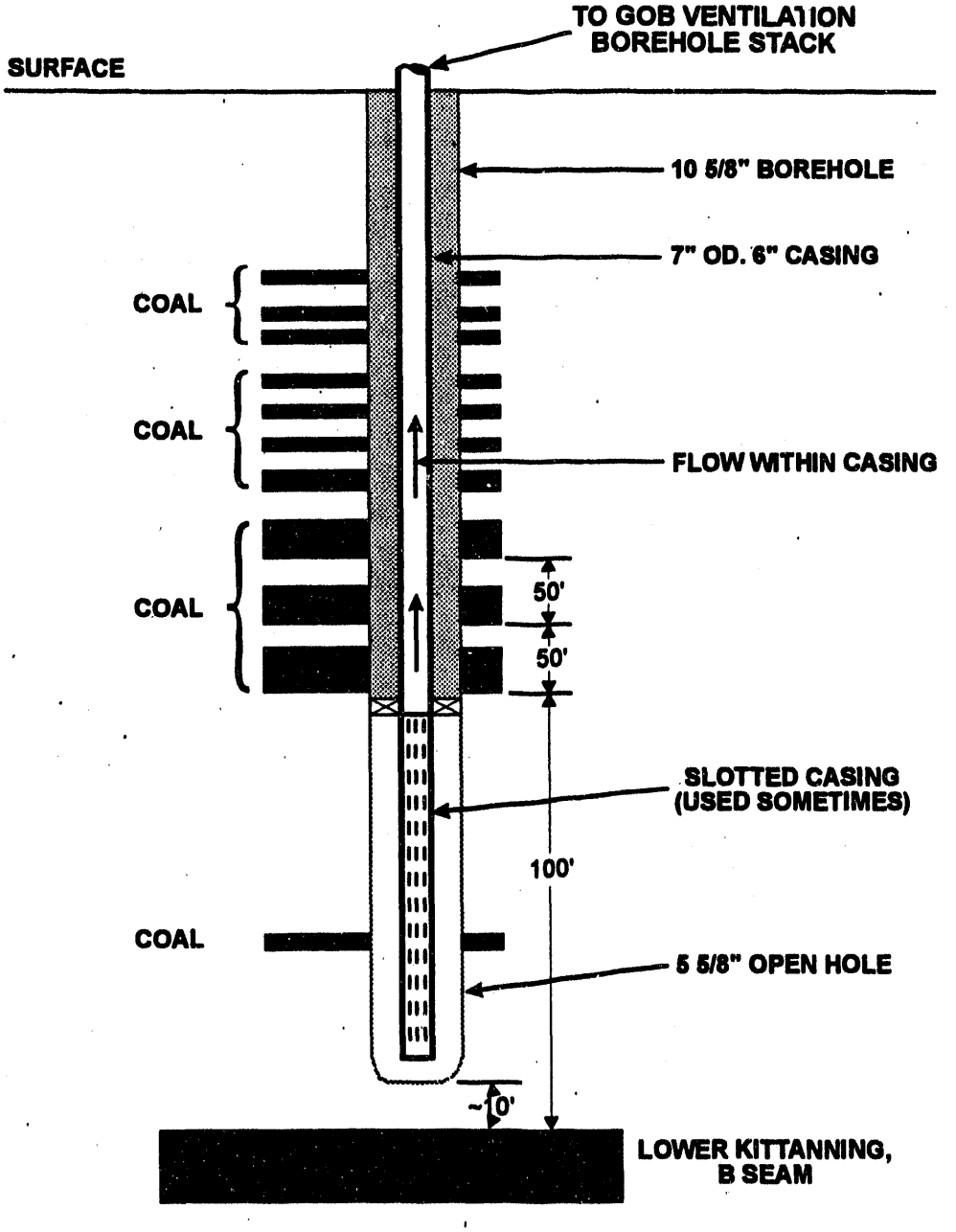

Figure 1. Typical Gob Well

As the longwall face advances and the coal is extracted, the overlying strata collapses as the coal is no longer present for support. Fractures are created as the overlying and underlying strata are disturbed, allowing gas to migrate to the gob well from adjacent coalbeds and other gas bearing strata (reference Figure 2).

Longwall Gob Fracture Zone

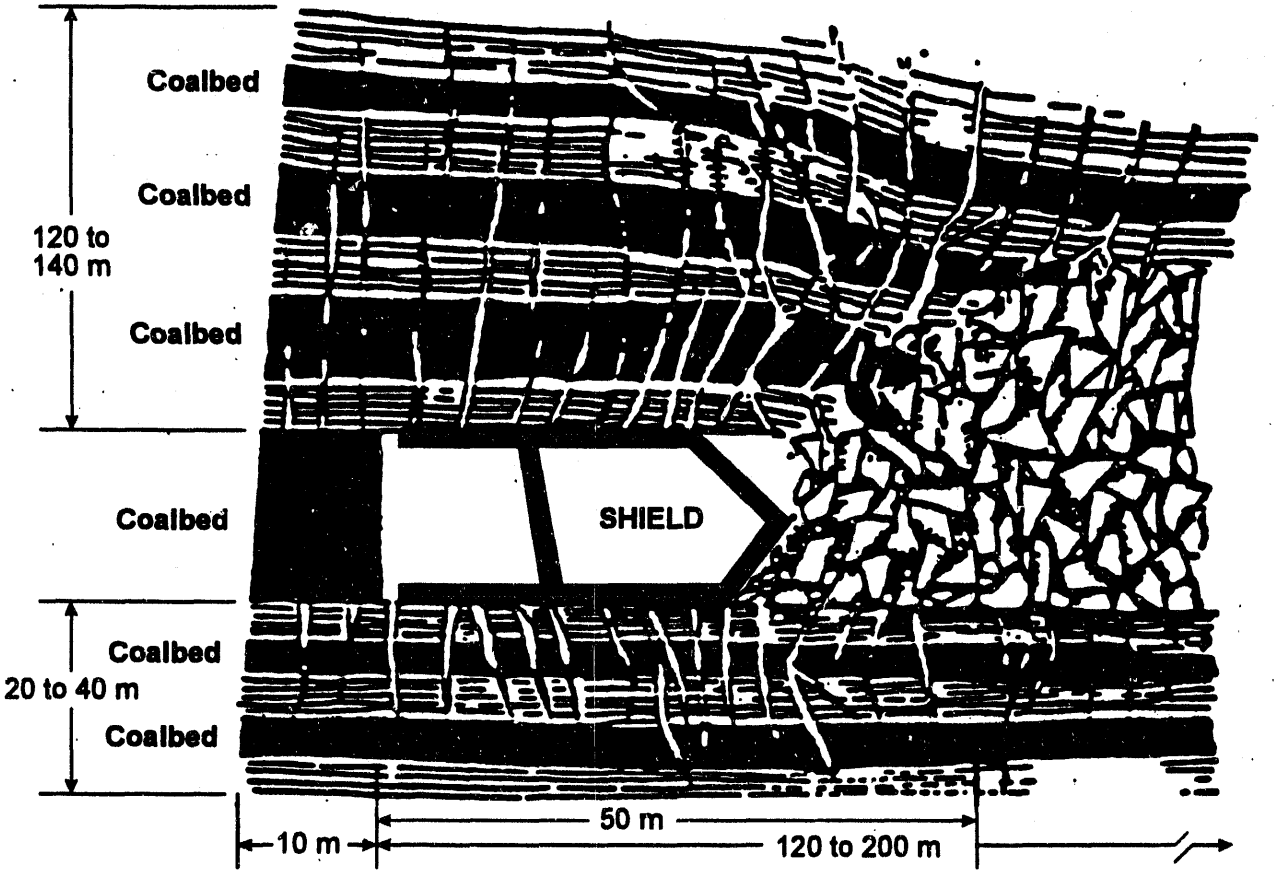

Figure 2. Longwall Mining Effects on Adjacent Strata

The fractured strata is referred to as the gob (or goaf). The gob gas flows to the surface by natural convection; however, most coal mine operators install vacuum pumps or blower/exhausters on each gob well to increase gas flow. Gob gas quality may range from nearly 100% methane to as low as 25% methane, at which time federal statutes require a gob well to be shut-in. Gob gas flows vary greatly from less than 100 Mcfd to over 8 MMcfd. Peak gas production and the highest quality gas generally occur when the gob well is initially undermined or intercepted by mining, and then decrease as the longwall face advances beyond the gob well. Variations in gas flow and quality are dictated by the reservoir characteristics of the fractured gob, the dynamic creation of the gob, and the design of the gob wells. This design is usually determined through site specific experimentation by mine operators.

In addition to vertical gob wells, alternative methods for extracting gob gas include the underground drilling and production of short cross-measure boreholes or long in-mine directional gob boreholes.[6] These may be used when there are surface access problems, the cost of drilling vertical gob wells is excessive, or for other reasons. Each gob gas removal technique has its own advantages and disadvantages relative to gas extraction effectiveness, cost, operation, etc. Figure 3 depicts each of the primary gob gas recovery techniques presently being used by U.S. mine operators.

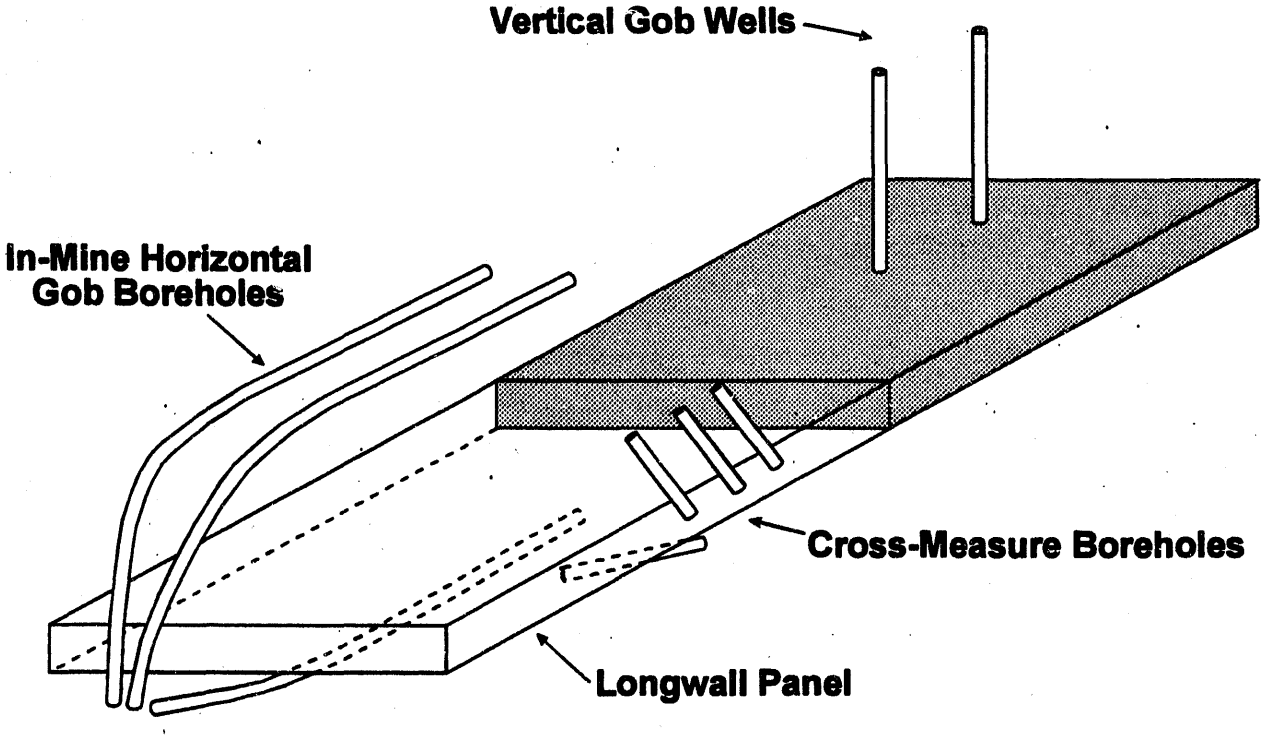

Figure 3. Comparison of Gob Gas Recovery Methods

2.2.2. In-Seam Boreholes

In-seam, small diameter horizontal boreholes are drilled from underground mine workings using permissible drilling equipment to: (i) provide degasification of longwall panels using short cross-panel boreholes (less than 1,000 feet long), (ii) shield methane emissions from development of longwall gateroad entries with long boreholes (greater than 1,000 feet), and (iii) degasify large blocks of virgin coal in advance of mining with long boreholes. In-seam horizontal boreholes have proven to be an effective method for significantly reducing methane liberations into mine workings.[7,8] Horizontal boreholes have also been shown to be capable of producing large quantities (as much as 450 cfd per foot of borehole) of pipeline quality (> 950 Btu's/scf) gas.[9,10,11]

Rotary drilling techniques are typically used to drill cross-panel boreholes. Directional drilling techniques may be used to effectively drill long horizontal boreholes, utilizing a

downhole motor equipped with a steering device. Downhole motors in conjunction with survey tools have been used to navigate boreholes to horizontal depths exceeding 4,000 feet, while maintaining the desired vertical and lateral borehole trajectory.[12,13] In low permeability coal seams, these in-seam boreholes may also be hydraulically fractured to enhance gas production.

In an effort to design and implement an effective in-seam methane drainage strategy, production estimates of horizontal boreholes have been made using computer based three-dimensional coalbed gas simulators, provided that accurate coal reservoir parameters are known. These parameters include cleat permeability, reservoir pressure, gas content, sorption time, etc. Confirmation of model simulations predicting degasification production and effectiveness (e.g., determination of residual gas in-place) in relation to mine ventilation requirements have been verified by matching projections with actual horizontal borehole flow measurements.[14] Simulations have also been performed to design degasification strategies (type of methane drainage approach, borehole design, spacing, etc.), and determine their impact on reducing ventilation requirements.[14,15] Horizontal drilling field experience and model simulations indicate that in-seam degasification can be effective even in short-term applications (e.g., < five years prior to mining).

2.2.3. Vertical Wells

Vertical wells may be used to remove methane in advance of mining to exploit the gas resource and reduce the in-place gas content and mine ventilation requirements.[16] After approximately ten years of production, a substantial reduction of gas in-place was experienced at the Oak Grove mine in the vicinity of a pattern of vertical wells, significantly reducing mine ventilation capacity requirements. To maximize effectiveness, vertical wells are typically drilled as far in advance of mining as possible and are hydraulically fractured using a variety of fracturing fluids (e.g., water, gels, foam, etc.), proppants and treatment approaches.[17] Fracture stimulation is conducted to enhance gas flow by increasing wellbore communication with the reservoir and its existing natural fracture (cleat) system. To address the concern of some mine operators, the fracturing effects on the coal, roof and floor conditions (after stimulation treatments were conducted), have been investigated and found to not adversely affect mining conditions or roof stability.[18]

2.2.4. Gas Injection

An experimental technique that may enhance methane recovery through the use of gas injection is being pursued by Amoco Production Company and others. This innovative method of producing coalbed methane consists of injecting inert gas, such as nitrogen or carbon dioxide, through a vertical injection well(s) into the coalbed and recovering methane from vertical production wells. The process has been laboratory tested, and is currently undergoing field testing.[19,20,21] The process involves: (i) injecting inert gas into the coalbed, (ii) maintaining total pressure high, (iii) reducing the partial pressure of methane, (iv) desorbing methane from the coal matrix and diffusing the methane to the cleats, and (v) producing the methane, inert gas and water from the production wells.

In comparison to the typical pressure depletion strategy for coalbed methane wells, an increase in gas recovery at an accelerated rate is anticipated. Recently, Amoco has been injecting nitrogen into four wells surrounding one producing well in La Plata County, Colorado.

According to Amoco, the injection results are encouraging (e.g., increases in gas production have occurred and production has closely matched model predictions). Figure 4 is a theoretical flow diagram of the gas injection process. Gas injection applied to vertical wells in advance of mining, or in-seam horizontal boreholes, may have potential for enhancing gas recovery and reducing mine ventilation requirements.

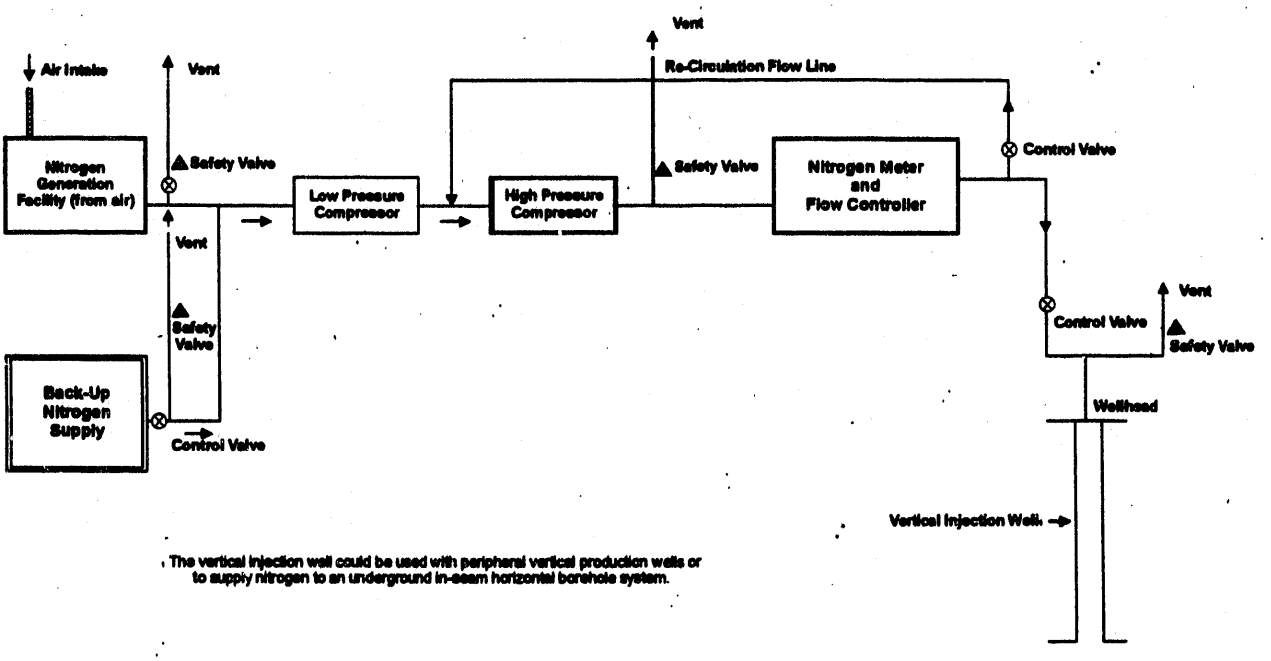

Figure 4. Gas Injection Flow Diagram

2.2.5. Summary of Degasification Methods

Considerable efforts have been expended by the U.S. Bureau of Mines, coal operators, REI and others to develop improved methods for extracting gas in advance of, and in conjunction with coal mining operations. These generally include: (i) vertical wells and in-seam horizontal boreholes drilled in advance of mining, and (ii) vertical gob wells, cross-measure boreholes and directionally-drilled horizontal gob boreholes installed in conjunction with mining. The selection and design of an appropriate mine degasification method have historically been based on an experimental approach. Coal reservoir simulators may now be used as a basis to provide engineering rationale to optimize the methane drainage system. Each method has its advantages and limitations with respect to cost, gas extraction effectiveness, impact on mining operations, etc.

The impetus for mine operators to perform degasification is usually out of necessity (e.g., improved underground safety and maintenance of mining productivity). Therefore, the cost of methane drainage operations is generally assumed to be part of the cost of mining. In some gassy mines, this degasification cost may be significant (e.g.; in excess of $1.00 per ton of coal mined). In order to improve the competitiveness of coal production from deep, gaseous

coal mines, operators must pursue means to reduce the cost of methane extraction. One way is to commercialize the gas resource through the application of advanced degasification methods and gas utilization technologies.

2.3. METHANE OWNERSHIP

The ownership of gas contained in coalbeds is a complex issue that must be addressed prior to development of any gas commercialization project. In the U.S., and in other countries throughout the world, the right to develop and commercialize coalbed methane resources has been a debated issue with contrasting outcomes. The conflict generally arises when there are severed oil, gas, coal (and possibly surface) ownership and/or development rights. The U.S. government, in Memorandum M-36935, dated May 12, 1981, stated that coalbed gas in federal coal deposits is not included in a coal lease under the Mineral Leasing Act.[22] However, on private lands, in certain cases the courts have decided in favor of the coal owners.[23] Generally, ownership of coalbed methane in these cases has been determined on the basis of the intent of the parties and circumstances existing at the time the mineral deeds were granted.

In Virginia and certain other states, legislation has been enacted to facilitate the development of coalbed methane resources.[24] For example, when there are conflicting claims to ownership of the gas, a forced pooling arrangement is provided for to facilitate pooling of the interests and estates relevant to the applicable drilling application. In those instances where distribution of the proceeds derived from the sale of the gas is unclear due to such conflicting ownership claims, a 12.5% royalty is escrowed pending resolution of such conflicts. In an attempt to remove the ownership barrier hindering the development of coal gas resources, the U.S. Congress incorporated coalbed methane development provisions in the Energy Policy Act of 1992. Among other things, the Act provides for the resolution of coalbed methane exploitation rights by the federal government for those states that do not enact their own legislation to facilitate the development of such resources.

Despite these gas ownership uncertainties and complexities, projects have been developed through cooperation between the coalbed methane developer and various mineral and other rights owners (or lessees). Under circumstances where gas is continuously being vented to atmosphere from coal mining operations, no party will receive benefits unless such cooperation occurs.

2.4. METHANE RESOURCE

The targeted methane resource associated with coal mining operations typically originates from the mine operators' degasification practices, as summarized in Section 2.2. The relatively low gas volume and varying quality of the resource were significant considerations in this investigation since economies of scale would not be realized for existing gas processing technologies. Although specific gas flow/quality cases were utilized in the various technology and economic evaluations performed, gas flows for representative mines in the U.S. are typically expected to be in the range of 1-5 MMscfd, with gas quality ranging from 50-90% methane and the balance consisting primarily of air (since a substantial portion of the exploitable resource is gob gas).

3.0 EVALUATION OF GAS UTILIZATION ALTERNATIVES

Power generation using low-quality gob gas has been investigated in other DOE projects. Despite the technical feasibility of low-quality gas combustion to generate power, it was not considered in the current evaluations for the reasons previously cited. The choice of a technology for gob gas utilization has to consider the two primary characteristics of the resource: (i) small scale gas production, and (ii) variability in production rates and quality of gas. It was also determined that the location of the gas source would have a vital impact on the selection of an appropriate technology. If the gob gas source was inaccessible to a pipeline, gas conversion to transportation fuels (such as gasoline or diesel), or to high-value hydrocarbons (such as specialty waxes), or to useful chemicals (such as methanol, acetic acid or urea), must be considered. On the other hand, if the gas source was in the vicinity of a pipeline, gas enrichment through removal of impurities and subsequent direct sale, would be feasible. The following evaluation results are organized into gas conversion and enrichment technology alternatives.

3.1. CONVERSION TECHNOLOGIES

The Shell Middle Distillate synthesis process is an example of a commercial technology for the production of diesel from natural gas. Mobil's gasoline synthesis converts natural gas to gasoline using methanol as the intermediate chemical. Cyclar process developed by British Petroleum converts LPG to aromatics at high selectivity. The aromatics are later used as gasoline blends or for petrochemical manufacture. The processes to produce methanol, ammonia and urea from natural gas are well known. Most of the above processes operate on scales much larger than any conversion process envisaged for gob gas (the scales of operation are well over 100 MMscfd of natural gas compared to 1-5 MMscfd of gob gas considered for this project). On a smaller scale, a process to convert landfill gas to hydrocarbon fuels has been designed and built. However, the plant experienced operational problems due to feed gas unavailability. Most of the above processes are based on conventional synthesis gas to chemicals technologies. Unconventional biological processes for the conversion of methane to methanol have also appeared in the literature. In this section, these technologies are briefly reviewed and their applications to gob gas conversion are examined.

3.1.1. Hydrocarbon Synthesis

A number of technologies are available for natural gas conversion to transportation fuels.[25] At the present time, hydrocarbons can only be produced from methane by first converting the methane into hydrogen (H_2) and carbon monoxide (CO), a mixture referred to as synthesis gas. The technologies to convert methane to higher hydrocarbons (or chemicals such as methanol or ammonia) include two steps: (i) synthesis gas conversion, and (ii) production of chemicals from synthesis gas. Considerable research is presently being conducted to develop catalysts to convert methane into higher hydrocarbons in a one-step process. However, the technology has not yet developed to the point of commercialization.[26] The Fischer-Tropsch process consists of synthesis gas conversion to hydrocarbons. It can be modified to produce a wide variety of products, including light olefins, diesel fuel, wax and alcohols. Synthesis gas can be produced from a wide range of feedstocks (e.g., natural gas, petroleum and coal).

A generalized schematic for the production of chemicals from natural gas is shown in Figure 5. Synthesis gas can be produced from methane by two processes: (i) partial oxidation (POx), or (ii) steam reforming of methane.[27,25] Both processes are widely used in refineries to produce the hydrogen required for various refinery operations. Ideally, synthesis gas for diesel production must contain an approximate 2:1 H_2/CO ratio. If the H_2/CO feed ratio differs substantially from the H_2/CO consumption ratio, then provisions must be employed to remove the excess component that may contribute substantially to the plant capital and operating costs.

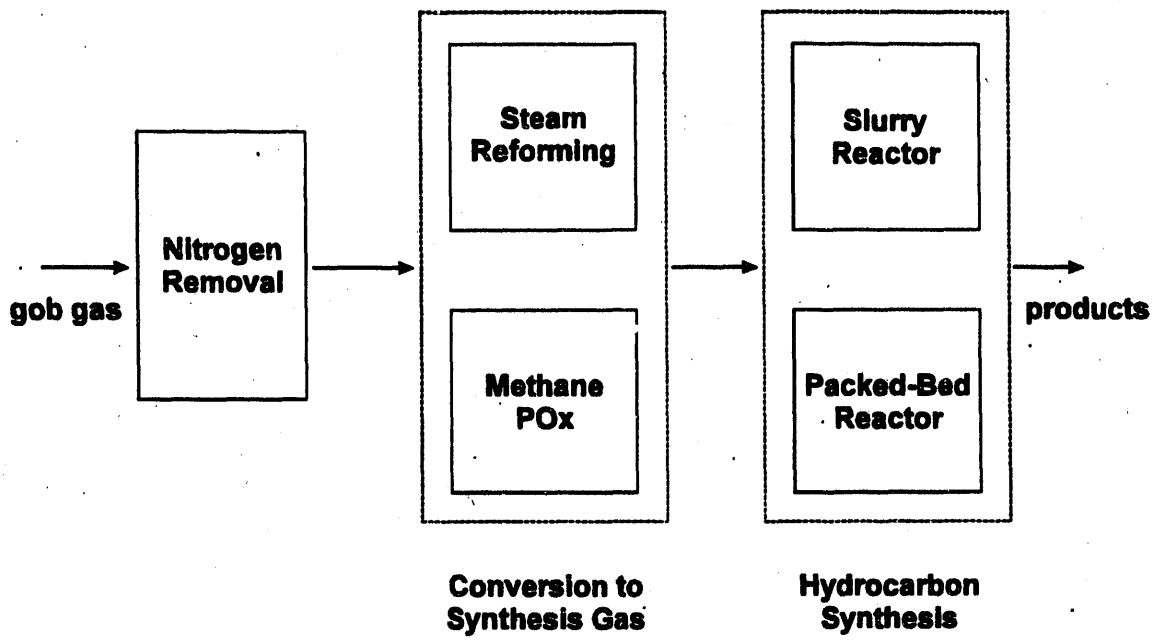

Figure 5. General Diagram for Production of Hydrocarbons/Chemicals from Gas

In partial oxidation, methane is combusted with limited oxygen to convert the methane to carbon monoxide and hydrogen.[27] This process should theoretically produce a 2:1 H_2/CO ratio; however, some conversion of hydrogen to water occurs which reduces the H_2/CO ratio in practice by about 10%. Increasing the H_2/CO ratio may be accomplished by steam reforming a side stream of methane to produce a hydrogen-rich stream to enrich the hydrogen content of the Fischer-Tropsch synthesis feed.[28] Because partial oxidation is a high temperature exothermic process, it is conducted in a furnace operated at high pressures. The heat of reaction may be used to either generate steam for plant utilities or supply the heat of reaction for the steam reformer.

An economic disadvantage of partial oxidation to produce synthesis gas is that it requires expensive oxygen, which can either be purchased from a vendor, or manufactured on-site in an oxygen plant. It would cost at least $10-13 million dollars to build an oxygen plant to provide oxygen to convert 2 MMscfd of methane. Because an oxygen plant would represent a substantial percentage of the overall process capital, methane partial oxidation using oxygen is not deemed appropriate for small scale operations. Alternatively, methane partial oxidation

with air can be considered; the obvious difficulty is that the carryover of nitrogen through the plant would require larger reactors and/or higher operating pressures. Because about 25% of the synthesis gas is not converted in the hydrocarbon synthesis reactor,[28] unconverted synthesis gas should be recycled. The nitrogen carryover through the plant would require that a substantial portion, if not all, of the recycle synthesis gas be purged to prevent nitrogen accumulation in the process loop. For the same reason, it would be essential to remove nitrogen from gob gas streams prior to subjecting the gas to any conversion process.

Steam reforming is the principal hydrogen manufacturing process and consists of converting methane and steam into light hydrocarbons. Theoretically, when methane is converted with stoichiometric steam, the resulting H_2/CO ratio should be 3:1. This is more than is required for Fischer-Tropsch synthesis. However, if carbon dioxide is available, carbon dioxide can be co-fed with methane and steam. A portion of the carbon dioxide will react with excess hydrogen to form carbon monoxide and water, thus lowering the H_2/CO ratio to the desired level. Unconverted carbon dioxide is then scrubbed from the synthesis gas prior to the Fischer-Tropsch synthesis reactor. The primary advantage with steam reforming is that it does not require expensive oxygen to operate effectively. The main disadvantage is that steam reforming is a high temperature endothermic process which needs to have the heat of reaction supplied by a fired furnace. Some of the reactor streams must be combusted to power the furnace which may reduce product yields.

Fischer-Tropsch synthesis consists of reacting hydrogen and carbon monoxide to form hydrocarbon chains consisting of CH_2 units, resulting in a wide boiling range of products. Theoretically, only two products can be produced by Fischer-Tropsch synthesis with high selectivity: methane and paraffin wax.[28] Intermediate boiling range products can be formed in high selectivity only by combining Fischer-Tropsch synthesis with an additional step to either recycle light products by converting them into synthesis gas, or to crack heavy products into the desired boiling range.[29] A number of reactor designs and catalyst formulations have been developed to achieve this. Certain problems have been historically associated with Fischer-Tropsch synthesis: removal of excess reaction heat and catalyst coke deposition. Recent advances in Fischer-Tropsch catalysis have been developed by Royal Dutch Shell that permit Fischer-Tropsch catalysts to be regenerated in-situ.[28] This permits the technology to be employed in packed catalyst beds, greatly simplifying the operation of Fischer-Tropsch synthesis.

3.1.2. Shell Middle Distillate Process

An example of the hydrocarbon production process using methane partial oxidation to generate the required synthesis gas is the Shell Middle Distillate (SMD) process.[30] A diagram of the Shell process is shown in Figure 6. Due to the need for costly oxygen, this process is unsuitable for gob gas conversion, but certain features and principles are applicable to other hydrocarbon synthesis processes. Since partial oxidation provides a synthesis gas with a slightly low H_2/CO ratio, extra hydrogen is produced by steam reforming a side stream of methane. Excess heat from the partial oxidation process can be used to supply the required heat for steam reforming. The heart of the Shell process is the hydrocarbon synthesis reactor that employs an improvement in the Fischer-Tropsch catalyst technology. Royal Dutch Shell developed a catalyst that is specific for producing higher molecular weight hydrocarbons than previous catalysts, and can also be regenerated in-situ. The Shell catalyst is packed in tubes immersed in water. Heat generated by Fischer-Tropsch synthesis is dissipated by converting

the water to steam. Steam from this process can be used to power compressors and to generate electricity; however, this steam cannot supply the heat for steam reforming because the steam reformer needs heat supplied at a higher temperature than Fischer-Tropsch synthesis can provide. The Shell process is designed to produce a significant amount of product with a higher boiling range than kerosene and diesel. The heavy product from the Fischer-Tropsch reactor is cracked in a hydrocracker operating at mild conditions to selectively produce kerosene and diesel. The combination of Fischer-Tropsch synthesis and hydrocracking produces high selectivities for kerosene and diesel.[31] In situations where wax production is more economical than diesel production, it would be possible to eliminate the hydrocracking step. Advantages of the Shell process are: (i) its high selectivity to kerosene and diesel, and (ii) the diesel product has a high cetane number. Disadvantages of the Shell process are the need for pure oxygen and the overall complexity of the process. Even though the technology can be implemented in modular trains at the small scale required for gob gas conversion, it is not expected to be economically viable.

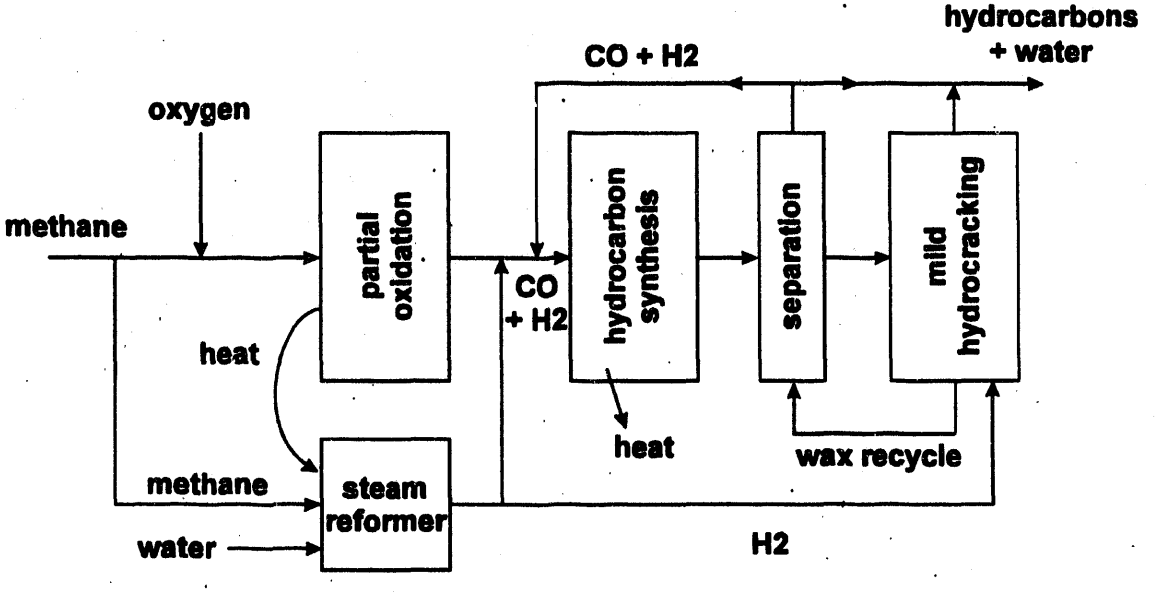

Figure 6. The Shell Middle Distillate Process for the Production of Hydrocarbons from Natural Gas

3.1.3. A Gob Gas Conversion Process

The optimal processing scheme for gob gas conversion should utilize steam reforming to convert methane into synthesis gas. A process to convert methane into liquids, with the Fischer-Tropsch technology employing methane steam reforming, is presented in Figure 6. The scheme is similar to the one employed by Synhytec Corporation for the conversion of landfill gas to diesel, as previously discussed. In the landfill application; however, the presence of substantial amounts of CO_2 in the feed required the use of a CO_2 scrubber prior to the hydrocarbon synthesis step. Methane conversion to higher hydrocarbons essentially consists of hydrogen removal to produce a liquid product with a lower hydrogen content than the

methane. The steam reforming process, depicted in Figure 6, would remove the excess hydrogen in synthesis gas and use it as fuel to supply heat to the steam reformer. Commercial hydrogen removal from synthesis gas streams is performed with membrane technology on a small scale. Membrane technology is particularly well suited for partial hydrogen removal from synthesis gas streams to produce a relatively pure hydrogen stream. The hydrocarbon synthesis in the conceptual process shown in Figure 7 is carried out in a slurry reactor, in which it is relatively easy to remove the heat generated during hydrocarbon synthesis.

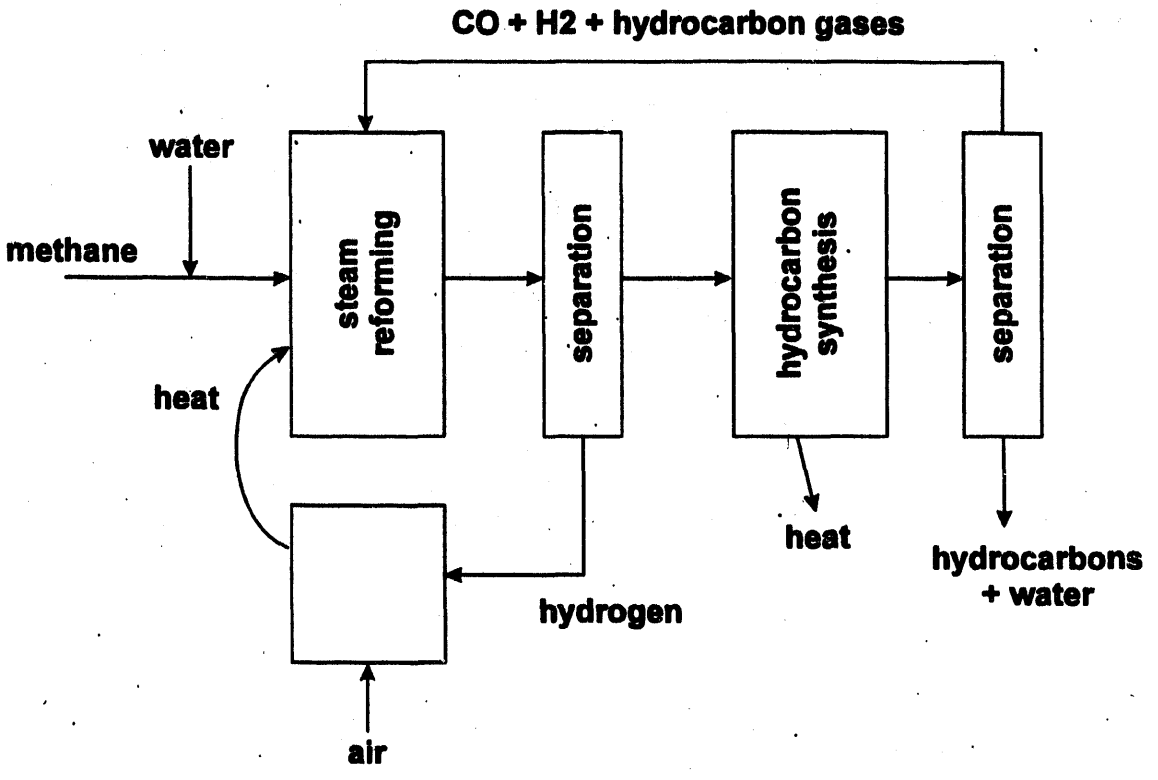

Figure 7. A Conceptual Process for the Conversion of Gob Gas to Hydrocarbon Fuels

A disadvantage of steam reforming is that the maximum operating pressure in the steam reformer is limited so that larger equipment is required than for oxygen or air partial oxidation. Despite their large size, steam reforming units are transportable because they are modular. The main portion of the steam reformer is the reformer furnace that is typically 40 feet high and 10 feet in diameter. Steam reformers are easy to operate and can tolerate substantial variations in feed rate during a period of several hours. However, the presence of substantial quantities of nitrogen in the gob gas would require even larger steam reforming units, which may not be cost effective. Therefore, gob gas denitrogenation must be performed prior to the conversion process.

3.1.4. Process Economics

The estimated capital cost to produce 10 MMscfd of synthesis gas from methane steam reforming is stated by Howe-Baker to be about $10 million. Considering a hypothetical case of 3 MMscfd of gob gas containing 65% methane, the cost would be about $8 million for synthesis gas conversion only. The slurry reactor is expected to cost $2 million and the accessories (compressors, separators, storage tanks, etc.) about $3 million. If the cost of gas clean-up is included, the plant would cost over $15 million. A 3 MMscfd plant containing 65% methane would produce 34.2 tons/day of hydrocarbon liquids. If the process is optimized to produce 78% wax, the total annual revenue from the plant would be about $7 million. These cost estimates are summarized in Table 2.

Table 2. Summary of Costs for the Production of Hydrocarbons from Gob Gas

Capital Costs:	**Amounts**
Steam Reformer	$ 8 million
Reactor	$ 2 million
Accessories	$ 3 million
Gas Enrichment	$ 3 million
Total Capital Costs	$16 million
Production Revenue:	
Wax (Yield 78%), 9000 t/year	$6.5 million
Liquid Fuels (Yield 22%), 2500 t/year	$0.5 million

Depending on the facility amortization rates and operating cost assumptions, a 5+/- year payback period may be possible. However, this optimistically assumes that the majority of the product yield is high-value wax. If the entire product yield is liquid fuel, then the annual product market value is reduced by about 67% resulting in a substantial adverse impact on process economics and payback. Additionally, there are two significant considerations that would deter investment in such a plant:

1. There are no commercial plants operating at the desired scale. A commercial venture to produce hydrocarbons from gob gas would be very complex and the first of its kind.

2. Gas clean-up is required prior to conversion; this problem would have to be addressed for implementation of gas conversion alternatives.

3.1.5. Methanol Production

Methanol is produced from the catalytic reaction of synthesis gas at elevated temperatures in pressurized catalytic reactors. General block diagrams of the methanol synthesis processes, based on steam reforming or combination reforming, are shown in Figure 8.[32]

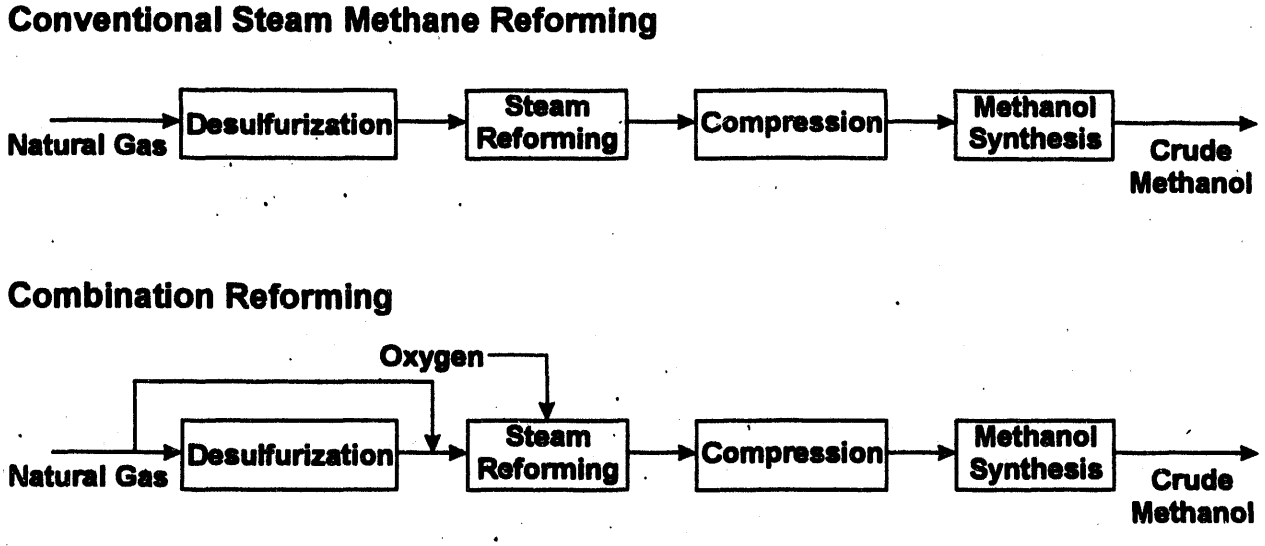

Figure 8. Block Diagrams Depicting the Production of Methanol from Natural Gas

In the combination reforming process, about half of the natural gas feed passes through the steam reformer effluent, and the mixture is autothermally reacted with oxygen over a nickel catalyst at about 950° C to produce the synthesis gas for the methanol converter.[33] If inexpensive CO_2 is available, natural gas-based methanol plants can be designed for the addition of CO_2 to the feedstock.[34] This reduces the natural gas usage per ton of methanol produced.

A natural gas-based methanol process has been described in detail in the Kirk-Othmer Encyclopedia of Chemical Technology.[25] The process utilizes highly active copper-zinc oxide catalysts, and operates at a 50-250 bar pressure and a relatively low temperature of 200-300° C. The crude methanol contains small concentrations of ethanol and some higher alcohols. Small quantities of ketones, aldehydes, ethers and hydrocarbons are also produced. The formation of byproducts may be suppressed by maintaining high hydrogen concentrations in the system and by using low reactor temperatures. Raw methanol is purified by distillation.

Current worldwide methanol production is over 20 million tons per year, with the methanol markets showing growth. Two recently introduced technologies, acetic acid production via methanol carbonylation and the production of methyl t-butyl ether (MTBE) from methanol and isobutylene have expanded the methanol market. Although methanol is an excellent burning fuel, its prior use as a motor fuel additive has been limited due to its corrosive effect on some components of the fuel feed system and its effect on the evaporation

characteristics of gasoline. Air quality regulations will increase the use of oxygenated fuels and enhance the future demand for methanol and other alcohols.

A large scale methanol plant producing 2,500 tons/day would require a capital investment (inside battery limits) of $237 million.[32] Plants producing 50, 100 and 150 tons/day would require capital investments of $7.5 million, $12.5 million, and $15.0 million, respectively.[35] A plant producing 50 tons/day of methanol would have to process about 2.5 MMscfd of gob gas containing 65% methane. Compared to hydrocarbon production, these capital costs are lower. Based on the above costs, Table 3 presents a cost analysis for a 50 ton/day methanol plant compared to a cost analysis for a large scale plant.[32]

Table 3. Estimated Production Costs for Large and Small Methanol Plants

Capital:	**2,500 t/d**	**50 t/d**
Inside Battery Limits	$157 million	$ 7.50 million
Off-Site Facilities	$ 80 million	$ 3.75 million
Total Fixed Investment	$237 million	$11.25 million
Working Capital	$ 11 million	$ 0.40 million
Cost Category:	**Cost ($/ton)**	**Cost ($/ton)**
Natural Gas @ $2/MMBtu,		
33.3 MMBtu/ton	66.7	66.7
Catalyst and Chemicals	3.3	3.0
Labor	1.0	5.0
Maintenance	11.0	27.0
Overhead	13.0	13.0
Depreciation,		
20% of ISBL + 7% OSBL	44.0	107.0
Total Cost of Production	139.0	221.7

If the gob gas resource is available at a nominal cost (e.g., $0.50/MMBtu), then the estimated cost of production for the 50 ton/day plant would be reduced to about $172/ton, still significantly higher than for the larger scale plant.

The catalyst in the methanol synthesis reactor can tolerate only a low nitrogen content (about 2%). Therefore, it is essential that the gob gas be purified prior to methanol synthesis. This is estimated to add about $1.00/MMBtu to the cost of the gas and about $30 to the per-ton production cost. Thus, the cost of producing a ton of methanol from gob gas would equal about $204, about 1.5 times the cost of producing methanol using a large scale facility. A review of the methanol from gas technology reveals that scale-down would be expensive and that gas enrichment would be essential before the methanol process could be considered.

3.1.6. Mixed Alcohols

Addition of 5-10% mixed alcohols is known to improve the octane rating of gasoline, and reduce the emission of harmful pollutants from automobiles. Although a number of problems need to be addressed to make this product acceptable to the automobile and petroleum industries, mixed alcohols represent one of the possible products that may be produced from gob gas or coalbed methane. The basic technology for the production of mixed alcohols from natural gas is similar to that of methanol production. Existing low-pressure methanol plants can be converted to the production of *Octamix,* an alcohol mixture that can be used as an octane enhancing gasoline additive.[36]

The Octamix process uses synthesis gas that is made the same way from natural gas by steam reforming or combined reforming, as described previously. The alcohol synthesis reaction is carried out at a temperature of 270-300° C and at a pressure of 50-100 bars in the presence of a copper-based catalyst. The general equation for alcohol formation is:

$$nCO + 2nH_2 = C_nH_{2n+1}OH + (n\text{-}1)H_2O$$

Typically, the product consists of 60% methanol and about 30% higher alcohols up to heptanol. The rest of the mixture is made up of other hydrocarbons and oxygenates.[37] Sawy describes other significant mixed alcohol processes.

The cost of producing mixed alcohols from natural gas is estimated to be about 1.3 times the cost of producing methanol. As a gasoline additive, mixed alcohols may be preferred to methanol due to their better water tolerance, and smaller effect on gasoline vapor pressure. The gob gas feed would have to be purified for the mixed alcohol process, similar to the alcohol and hydrocarbon processes.

3.1.7. Ammonia Synthesis

Ammonia is synthesized from a 3:1 mixture of hydrogen and nitrogen. The source of hydrogen is synthesis gas, which is made by reforming natural gas. A block diagram for the ammonia synthesis process is shown in Figure 9. Both steam reforming and air partial oxidation are used to generate a feed of appropriate composition for ammonia synthesis. Air partial oxidation is primarily used to supply the stoichiometrically required amount of nitrogen for ammonia synthesis. After shift conversion (to produce more H_2 from CO and steam) and CO_2 removal, the remaining carbon oxides are removed in a methanation reactor to protect the ammonia synthesis catalyst from the harmful effects of carbon oxides. Iron oxide-based catalysts, activated with potassium aluminate, are utilized for ammonia synthesis.

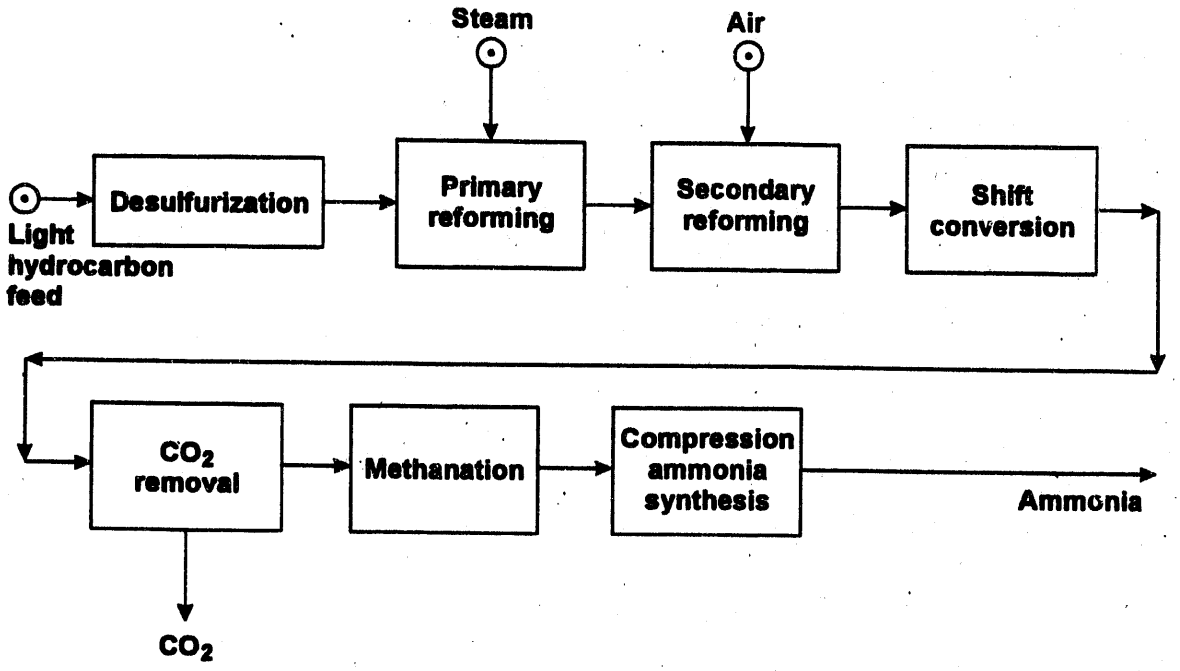

Figure 9. Block Diagram for Ammonia Synthesis from Natural Gas

Worldwide ammonia production was 120 million tons in 1990. More than 90% of the ammonia produced is used as a fertilizer, principally in the form of urea or ammonium nitrate. The recent price range for liquid ammonia was $120-140/ton. The current cost of producing ammonia from natural gas for a 1,000 ton/day facility would be about $170/ton, indicating an ammonia over-capacity worldwide. The nominal price of gob gas would help bring the cost of production down; however, the smaller scale of operation would add to other costs. It is estimated that producing ammonia from gob gas would cost over $200/ton, an amount that is clearly uneconomical. Ammonia synthesis is the only conversion application where gas clean-up would not be essential. Even so, it was not considered prudent to explore this conversion option further.

3.1.8. Production of Acetic Acid

Acetic acid is produced by the carbonylation reaction of methanol, preferably using part of the synthesis gas as the source of carbon monoxide. The technical and financial considerations of this process, when gob gas is utilized as feed, are very similar to the methanol and mixed alcohol processes.

3.1.9. Biological Conversion of Methane to Methanol

A few unconventional processes for the production of chemicals from natural gas have been proposed. One such process is the biological conversion of natural gas to methanol.[38] A schematic of the process is shown in Figure 10. The process employs microorganisms called methylotrophs and converts natural gas to methanol aerobically. It is possible to achieve a theoretical maximum yield of 67%; in the commercial process it may be more realistic to expect

a 50% yield to methanol. A 90% methane conversion would require a relatively long retention time in a continuous stirred tank reactor (CSTR) at atmospheric pressure. At higher pressures, it may be possible to reduce the retention times. After heat recovery in a heat exchanger, the product stream from the CSTR is sent to a distillation column, where the methanol product is recovered. Since the process is aerobic, it can tolerate the presence of nitrogen, oxygen and carbon dioxide in the gob gas.

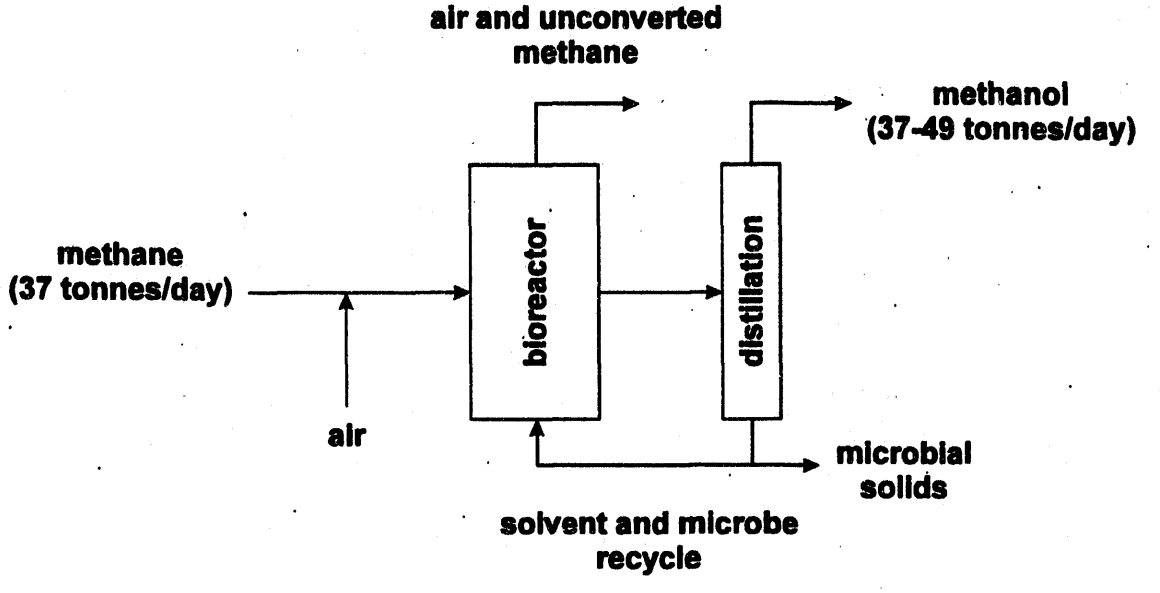

Figure 10. Schematic of a Process for the Biological Conversion of Methane to Methanol

This technology may have promise; however, it is still at an early stage of development. Therefore, it would be appropriate to test the process thoroughly in a pilot-scale facility to obtain the technical and economic information needed to assess process economics before commercialization is contemplated.

3.1.10. Summary of Conversion Technologies

All of the conversion technologies discussed above have the following aspects in common:

1. The total capital investment to convert 3 MMscfd of gob gas to hydrocarbon fuels or useful chemicals is estimated to be $15-25 million.

2. There are no commercial gas conversion plants operating at this scale.

3. The technologies are complex and a significant amount of technical expertise would be essential in order to operate them successfully on a continuous basis.

4. All of the technologies, with the possible exception of ammonia manufacture, require that the gob gas be upgraded prior to processing.

Because of the above considerations, a decision was made to refocus the investigation on gob gas enrichment technologies.

3.2. ENRICHMENT TECHNOLOGIES

A typical composition of gob gas is shown in Table 4, along with the expected compositional variation over the lifetime of a project. Larger variations may be expected, however, depending on site specific conditions. Typical pipeline requirements for the gas are also shown in the table. The table presents the level of gas clean-up required to enable gob gas to be introduced into pipelines.

Table 4. Typical Gob Gas Composition and Required Pipeline Composition

Constituent	Gob Gas	Pipeline Specification
Oxygen	3% (2-6)	10 ppm
Nitrogen	16% (9-26)	3% max.
Carbon Dioxide	3% (3-9)	3% max.
Methane	78% (65-85)	97%
Water Vapor	Saturated	7 lbs/MMscf
Flow Rate	1-5 MMscfd	--

Pipelines require that the gas has a maximum of 3% non-hydrocarbons. The oxygen requirements are very stringent. Of the impurities in gob gas, carbon dioxide and water vapor are easily removable using existing commercial technologies. Nitrogen removal is a difficult problem, and technologies for nitrogen rejection at this scale are on the threshold of commercialization. The presence of oxygen in the gob gas makes the gas clean-up strategy complicated and requires that an integrated approach be pursued. Even though a single commercial technology to remove all of the impurities in the gas is currently not available, it is possible to formulate integrated processes for gob gas enrichment. Such processes need to effectively address the compositional and flow rate variability of the gas.

From a technical perspective, nitrogen removal from methane is the most difficult separation. For this reason, it is also the most expensive. Therefore, an effective nitrogen rejection process will be critical for any integrated clean-up strategy. A detailed evaluation of available small scale nitrogen rejection technologies was conducted by the Gas Research Institute (GRI).[39] This work, performed by the M.W. Kellogg Company for GRI, examined three technologies: (i) the cryogenic process (the process of choice for nitrogen removal at larger

scales), (ii) pressure swing adsorption (PSA) technology, and (iii) a lean-oil absorption process (commonly used in refineries for removal of methane from higher hydrocarbons).

The study concluded that for purification of 1 MMscfd of natural gas that contains 6-25% nitrogen: (i) the cost of the cryogenic and PSA processes are comparable, and (ii) the lean-oil process is significantly more expensive. This study did not consider the presence of other impurities such as oxygen and carbon dioxide in the gas. Although the lean-oil process described in the GRI report was not evaluated during the course of this project, a similar process (which has recently been field tested), was examined. Brief descriptions of each of the processes and their applicability to nitrogen removal from gob gas are presented in the following sections.

3.2.1. Cryogenic Process

A schematic of a cryogenic separation process is shown in Figure 11. The process utilizes a series of heat exchangers to liquefy the feed gas stream (to a temperature of about 90 K). Typically, four main heat exchangers are used: the core exchanger, the reboiler, the feed chiller and the overhead condenser. The feed gas is first compressed to high pressure and is cooled in the core exchanger by transferring heat to product streams from the separator column(s). It is further cooled by supplying heat of vaporization in the reboiler, and by heat exchange with the bottoms in the feed chiller. The feed gas is then flashed across a Joule-Thompson valve where it loses its pressure and undergoes substantial cooling. The separator or distillation column is operated at a pressure of around 350 psig. The nitrogen-rich stream is vented and the methane-rich stream is first cooled by flashing to low pressure. It then acts as a coolant for the overhead condenser of the separator column and also for the feed stream as it passes through the feed chiller and the core exchanger. It undergoes vaporization in the core exchanger, subsequent to which the methane-rich gas is compressed to sales pressure.

A plant to produce liquefied natural gas (LNG) would operate on the same principle, except that the last step would be omitted. The sales stream is retained in liquid form, while the heat duty in the core exchanger is provided by an external refrigeration unit. The carbon recovery in the cryogenic process is 98%, the best of the three nitrogen rejection alternatives evaluated.

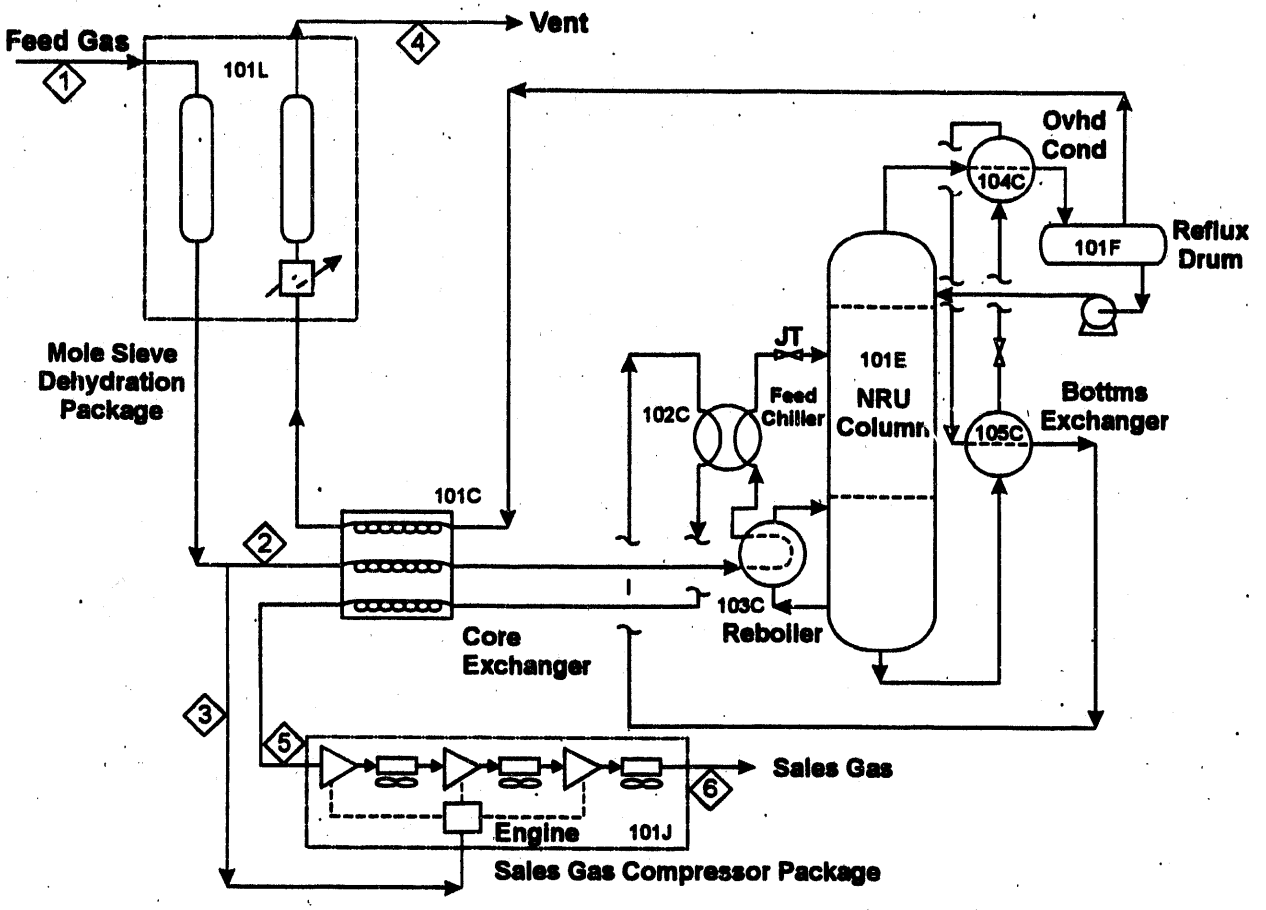

Figure 11. Schematic of a Cryogenic Process (from GRI-91/0092, 1991)

Two engineering companies, Darnell Engineering and Schedule A, both in Houston, Texas, offer small scale (2-10 MMscfd) cryogenic process plants. The technologies offered by these two companies are very similar, with some minor differences. The capital cost of a cryogenic unit is estimated to be about $0.7-0.8 million for a feed gas flow rate of 3 MMscfd. The compression requirements are also similar. The feed gas is compressed to about 700-800 psia for operation of a cryogenic unit. It is estimated that feed gas compression, along with the sales gas compression assumed for pipeline specifications, would cost about $1 million. Therefore, the total capital costs for a cryogenic unit, including accessories and contingencies, would be about $2 million. This compares reasonably well with the capital cost reported in the GRI-91/0092 report.

Advantages of the cryogenic process include the collective experience that has been obtained due to widespread implementation in larger scale applications, and reasonable capital and operating costs. The disadvantages are process complexity and high degree of sensitivity to impurities. The GRI report notes that impurities such as carbon dioxide and mercury are of significant concern, and that heat losses should be factored into operability problems.[39] Due to the process complexity, the process does not lend itself favorably to changing gas feed compositions and flow rates. Conversations with the companies offering this technology revealed that even trace levels of oxygen would be unacceptable to the

process and that a rigorous deoxygenation step would have to be carried out if the process were to be contemplated for a gob gas application.

3.2.2. Pressure Swing Adsorption (PSA)

PSA operates on the principle of selective adsorption of gaseous species on well-designed molecular sieves. The process is based either on the equilibrium adsorption capacities of different gases on molecular sieves (equilibrium PSA process), or on different diffusion rates of gases through the molecular sieves (kinetic PSA process). Wide-pore molecular sieves are used in equilibrium-based separation, while narrow-pore molecular sieves are used for kinetic separation.

The separation of nitrogen from methane usually requires the use of equilibrium-based separation. For this separation, carbon molecular sieves are employed. In a gas stream containing a mixture of nitrogen and methane, methane is preferentially adsorbed. The adsorption of different species on the molecular sieves is governed by multicomponent adsorption equilibria. This preferential adsorption is carried out during what is known as the pressurization cycle. When pressurization is taking place, the outlet stream is enriched in nitrogen. The molecular sieve-bed reaches its saturation capacity, at which time the adsorption cycle is stopped and the bed is depressurized. The stream from the depressurizing bed is enriched in methane and becomes the ultimate sales stream.

Operation of a PSA nitrogen rejection unit consists of four essential steps:

1. Pressurization
2. Adsorption and subsequent recycle
3. Depressurization
4. Evacuation

A continuous PSA process would consist of operating a series of 4-5 beds. A general process schematic of the PSA process is included as Figure 12.[39] Evacuation may or may not be effected under vacuum. The beds are operated in such a way that each bed is in a different phase of operation at any given time. The cycle times are of the order of minutes and valve switching is rapid. The unit has limited moving parts and operates in a single phase flow mode all the time. A PSA unit would respond to changes in gas flow rates and composition by adjusting valve timings and recycle ratio. The carbon recovery from a PSA process is about 95%, based on the feed gas to the PSA unit.

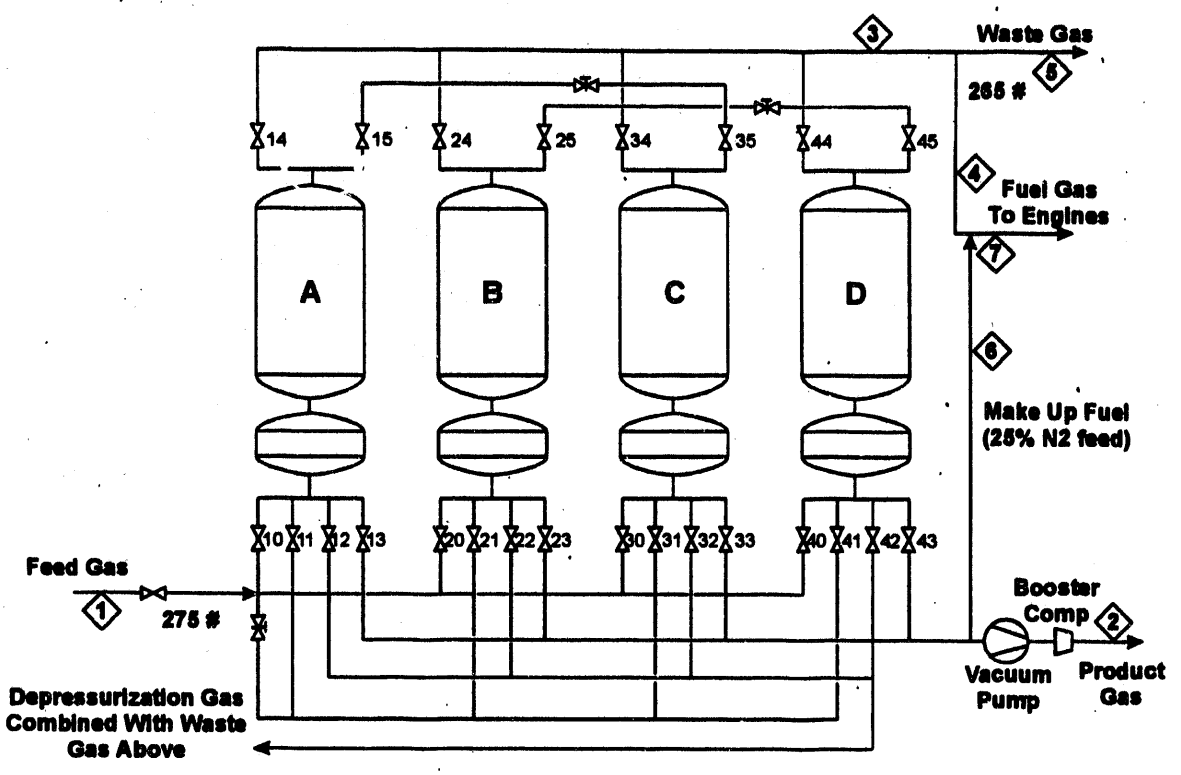

Figure 12. Schematic of a PSA Process (from GRI-91/0092, 1991)

The process shown in Figure 12 was formulated by Nitrotec Engineering Co., Linthicum, Maryland. Additionally, UOP, Houston, Texas, provides an advanced nitrogen rejection process with standard plant capacities of 3, 5 and 10 MMcfd. UOP currently has a PSA nitrogen rejection facility processing 1-2 MMcfd of gas containing 30% nitrogen at a conventional natural gas field in Texas. UOP is a large engineering firm and has substantial gas processing technology, engineering support capabilities and financial wherewithal, which may be considerations in the selection of a vendor for supply of nitrogen rejection equipment and technology support. There are some variations in technologies offered by Nitrotec and UOP in terms of pressurization/evacuation steps, and a few other differences. The PSA nitrogen rejection systems have excellent turndown capability, and can operate with minimal attention on a continuous basis.

In general terms, the capital cost for installation of a 3 MMscfd gob gas denitrogenation unit (excluding other gas clean-up processes) would consist of about $0.9-1.2 million in PSA unit costs, and about $0.6-0.7 million in compressor costs. Therefore, the total capital costs for the cryogenic process and the PSA processes would be on the order of $2 million. The fact that the two costs are comparable is consistent with the GRI observation.[39] Most of the oxygen would be rejected with the nitrogen in the PSA process. With its single-phase, limited moving parts operation, PSA technology is expected to be simpler than the cryogenic process and more robust to the presence of impurities. The valve-switching scheme allows for quick and easy process adjustments in response to changing flow rates and feed gas compositions.

3.2.3. Selective Absorption Process

The selective absorption process is a variation of the lean oil process described in the GRI study.[39] The concept uses a specific solvent that has different absorption capacities with respect to different gas species. The technology of absorption to selectively enrich gas streams has been commonly employed in the petroleum refining industry. The specific technology of rejecting nitrogen from methane using selective absorption is offered by Advanced Extraction Technologies, Inc. (AET) of Houston, Texas. AET has demonstrated this technology using a 5 MMscfd conventional natural gas field unit at an Anadarko Gathering Company compressor station in Hugoton, Kansas.[40] Another independent GRI study,[41] conducted by SRI International, assessed AET's selective absorption process to be more favorable than the cryogenic process for small scale nitrogen rejection based on 30% lower overall energy requirements and 12% lower overall costs.

In the AET process, a special solvent selectively absorbs methane rejecting a nitrogen-rich stream. Unlike the conventional lean-oil plants, the AET process uses a heatless approach to separate the recovered methane gases by reducing the pressure of the rich oil in steps.[40] A schematic of the Hugoton demonstration unit is presented in Figure 13. The inlet gas is cooled using a propane refrigeration system. The inlet gas is cross-exchanged with the absorber overhead and cold vapor streams from the gas recovery flashes to reduce external cooling loads. The solvent stream that exits the absorber tower rich in methane, is depressurized in four stages. The flash streams are repressurized to sales pressure, while the solvent is pumped back to the absorber tower.

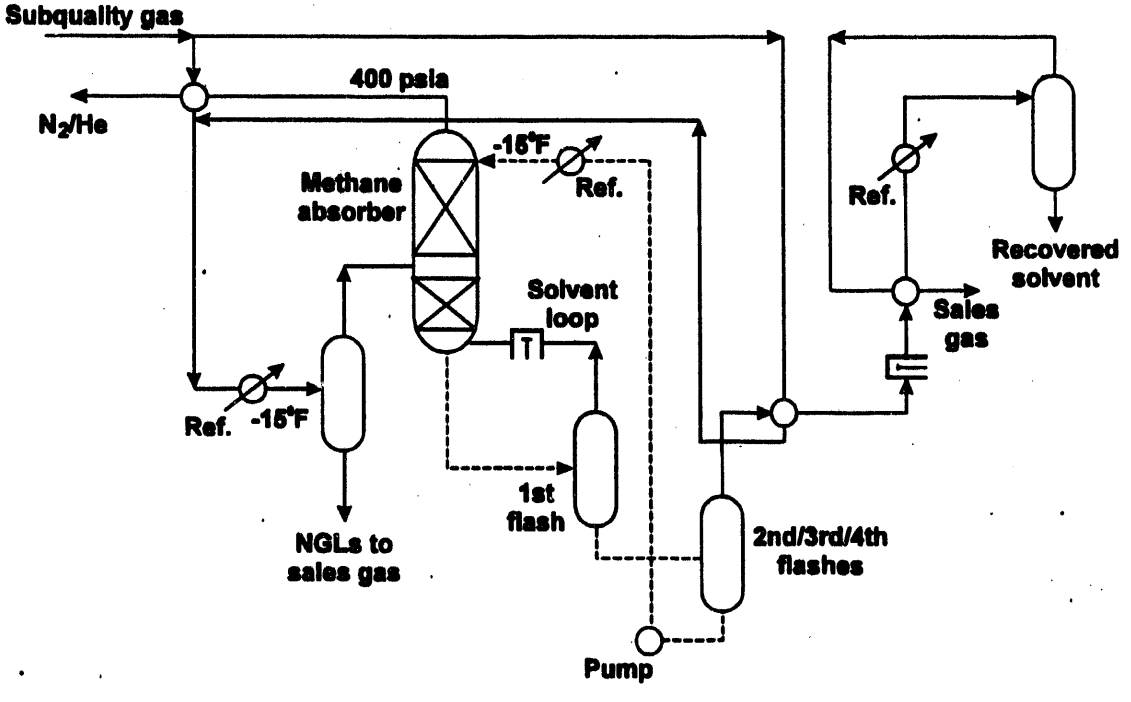

Figure 13. Schematic of the Selective Absorption Process (Mehra, et al., 1993)

The process affords flexibility for feed flow rate and compositional variations. The absorption characteristics of the solvent are determined by the equilibrium curve. At constant column pressure, the solvent-to-feed ratio remains constant for varying feed rates. For higher nitrogen concentrations in the feed gas, greater solvent-to-feed ratios would be required. It is possible to automate the entire facility and run it with minimal attention on a continuous basis.

The presence of carbon dioxide in the gas would not have a significant impact on the selective absorption process. However, the solvent would not tolerate the presence of oxygen. Therefore, a rigorous deoxygenation procedure to reject the oxygen in the gob gas would have to precede the solvent extraction step, making this approach more complicated than a PSA-based system since a higher concentration of oxygen would have to be removed.

The capital costs of the selective absorption process are comparable to the cryogenic and PSA processes. The process appears appropriate for gob gas application.

3.2.4. Rejection of Other Impurities and Integrated Strategies

The oxygen separation component adds significant complexity to the gob gas clean-up requirements. Oxygen may be removed by the catalytic combustion of methane on noble metal catalysts. The catalytic combustion is accompanied by the release of a considerable amount of heat. In practice, catalytic combustion is performed adiabatically. If the oxygen content in the feed gas exceeds 3%, the temperature increase may become unacceptable. To address deoxygenation of feed streams containing more than 3% oxygen, either hydrogen assisted combustion or some type of feed dilution strategy would have to be employed. Stream dilution would be a preferred option since hydrogen would add to operating costs and would also create a safety concern.

The oxygen content in the feed gas could be as high as 10%, if not higher. Of the three nitrogen rejection processes previously discussed, the cryogenic process is the most sensitive to the presence of oxygen and carbon dioxide. Given the uncertain nature of the gob gas supply, with inherent compositional and flow rate variations, installation of a cryogenic unit for nitrogen removal would have a relatively high degree of risk. Although the cryogenic process appears cost competitive, it was not deemed to be applicable to small scale gob gas enrichment. Therefore, the nitrogen rejection unit should be based on either PSA or selective absorption technology.

The selective absorption process would require the removal of oxygen prior to nitrogen rejection. In PSA, most of the oxygen would be rejected with the nitrogen. Therefore, a smaller deoxygenation unit (to remove about 0.5% oxygen) would be installed after the nitrogen rejection unit. This would reduce overall costs; however, some of the PSA process gas streams may contain combustible mixtures of methane and oxygen. The methane/oxygen concentration passes through the explosive envelope inside an adsorbent bed vessel. This would potentially eliminate the danger of explosion because: (i) there is no ignition source inside the vessel, and (ii) the adsorbent bed vessel functions as a flame arrestor. Additional flame arrestors may be placed on vent gas streams to prevent an externally-generated flame (e.g., from lightning) from moving upstream into the vent line.

Carbon dioxide removal from natural gas is straightforward and has been practiced routinely in the natural gas industry. Amine absorption units and membrane separation processes have been employed for the removal of carbon dioxide. Either of these alternatives

is suitable in the event that carbon dioxide treatment is necessary. Likewise, removal of water vapor using glycol units or conventional drying is well known in the natural gas industry.

The above mentioned components could be combined into two integrated gob gas clean-up alternatives. In the first option, a PSA unit would receive the feed gas. The denitrogenated and partially deoxygenated gas would undergo further deoxygenation, carbon dioxide removal (if required) and drying, in that sequence, and could then be introduced into a pipeline. The product gas compression may precede the carbon dioxide removal step if an amine unit is used for carbon dioxide removal since the amine unit functions more effectively at higher pressures. A schematic of this integrated strategy is shown in Figure 14.

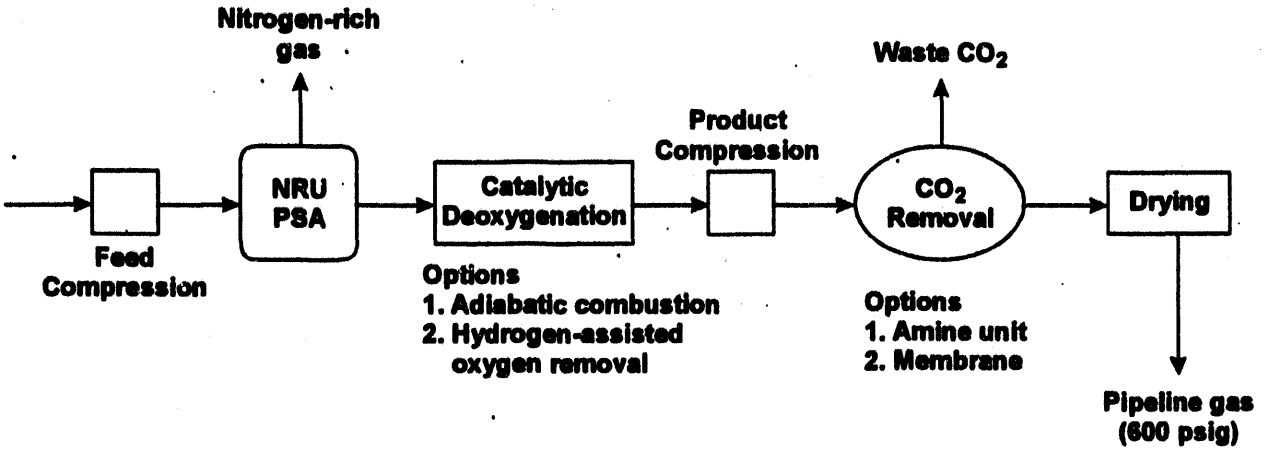

Figure 14. Integrated Strategy for Gob Gas Enrichment Using PSA for Nitrogen Rejection

In the second option, the feed gas would first undergo deoxygenation. This deoxygenation would be designed for the highest possible oxygen concentration in the gob gas. It would then undergo nitrogen removal in the selective absorption process. A dehydration component would be part of this particular selective absorption. The denitrogenated gas would be compressed to the sales pressure and would then undergo carbon dioxide removal (if required), and dehydration before being introduced into a pipeline. This alternative is presented in Figure 15.

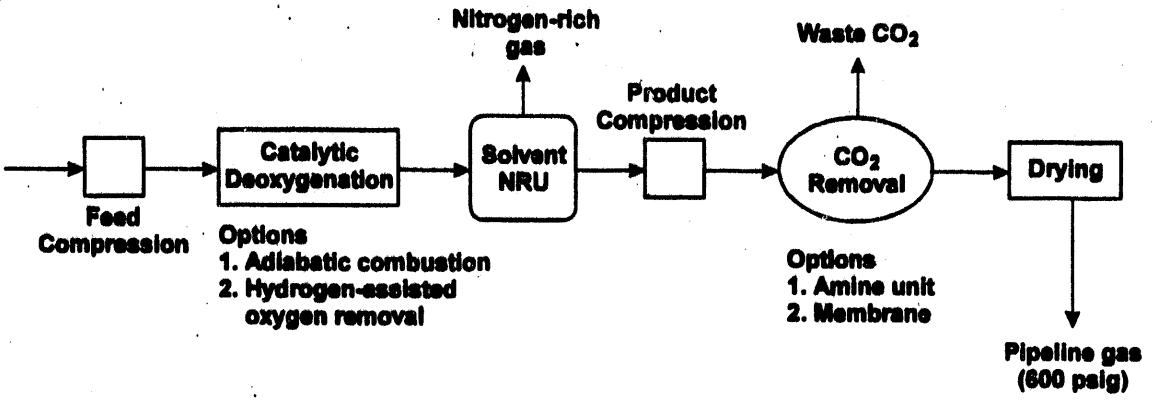

Figure 15. Integrated Strategy for Gob Gas Enrichment Using Solvent Extraction for Nitrogen Rejection

3.2.5. Environmental Considerations

Either gas enrichment process (using PSA or selective solvent absorption for nitrogen rejection) results in minimal adverse effects on the environment. The overall effect, when considering the benefits resulting from reduced methane emissions to atmosphere, is a net favorable impact on the environment.

The various PSA nitrogen rejection processes emit some methane in the reject gas stream. Other potential effluents include small amounts of wastewater during oxygen removal and dehydration processes, and limited methane and carbon dioxide emissions during CO_2 scrubbing operations. Point source NOx emissions from stationary fuel burning power sources (e.g., compressors) would also occur, as with most natural gas production and transportation operations. In the event that significant quantities of higher hydrocarbons exist in the processed gas (which is atypical for coalbed methane), the adsorbent material may become contaminated over time. Licensed facilities exist for regeneration and disposal of the spent adsorbent material. None of the foregoing issues are expected to create material environmental or permitting problems or concerns.

The selective solvent absorption process also results in the release of small amounts of hydrocarbons to atmosphere during nitrogen removal. The solvent is recirculated; therefore, no solvent disposal problems exist. The primary concern with this process is the handling and storage of the solvent itself. Careful plant design and operation should ensure that leaks and spills do not contaminate soils and water. Other potential effluents include limited quantities of wastewater, spent desiccant and process filters, which should not present a problem. NOx emissions from compressors would also occur.

As discussed above, the primary environmental effects associated with the gas enrichment operations described in this report are those that impact air quality. Compliance with air quality regulations should be straightforward since these types of emissions are routinely treated in the natural gas industry. The level of compliance required will be site specific (e.g., what jurisdiction the facility is located in and its proximity to populated areas).

3.2.6. Economic Evaluation

The final aspect of the gob gas enrichment technology evaluation was a detailed economic analysis of the preferred utilization methodology. As previously discussed, a technical review of potential technologies has isolated gas enrichment as the initial preferred focus for non-electric commercialization of the gob gas resource. Specifically, for this evaluation, PSA nitrogen rejection technology was used as the basis for an integrated gas clean-up system to upgrade gob gas to bring it into compliance with pipeline standards.

A model was formulated to assess the economic potential of the PSA-based gas enrichment technology. Exhibit A contains the assumptions and results of the model, and the specific cash flow analysis pertaining to the base case mine (the Mine). The base case mine was derived by examining the operating characteristics of various gassy coal mines from a geographically diverse cross-section of mines located in the U.S. All input variables in this case are considered the "most likely" to be encountered during implementation of a gob gas commercialization plan at the Mine.

The Mine analysis spreadsheet is set up in an income statement format, with cash flow adjustments at the bottom. A net present value profile at various discount rates, together with a calculation of the projected internal rate of return on the project are presented. A required rate of return equal to a 20% hurdle rate was targeted during sensitivity analyses to isolate the initial input values of variables necessary to achieve favorable project economics. The specific assumptions used in the worksheet are: (i) there is one project owner, (ii) Section 29 tax credits (that may or may not be available based on various requirements) were both considered and not considered, (iii) the project's economic life would be less than 20 years, and (iv) 100% equity (e.g., unleveraged) funding is used to finance the facility investment.

The results of the economic analysis were favorable. Constrained by very conservative operating assumptions, projects of this type could potentially generate internal rates of return in excess of 48% (tax credits utilized) and 22% (tax credits not utilized). Leveraging the facility investment would significantly enhance the project's return on equity capital. Considering that the gob gas resource is: (i) currently being vented as part of ongoing mining operations, (ii) a waste energy source, and (iii) a potential "greenhouse" gas, a favorable economic return to commercialize this source of energy would result in multiple benefits.

3.3. SUMMARY OF GAS CONVERSION AND ENRICHMENT EVALUATIONS

The presence of oxygen, nitrogen, carbon dioxide and water vapor, and inherent flow rate and compositional variations, make gob gas a unique feedstock. Conventional, commercial technologies are therefore not directly applicable either for its conversion to chemicals or fuels, or for its enrichment to pipeline quality. Existing technologies are adaptable, however.

Technologies are available for small scale conversion of natural gas to hydrocarbon fuels or useful chemicals. However, these technologies would cost 1.5 to 2 times more than the equivalent large scale technologies for the production of a unit quantity of product. The technologies are complex and estimated to require capital investments of $15-25 million to convert 3 MMscfd of gas. Additionally, almost all of the technologies require gas enrichment (removal of nitrogen, oxygen, etc.) prior to conversion. Because of these considerations, it is

deemed more prudent to initially pursue enrichment technologies for commercialization of gob gas.

Enrichment of gob gas to pipeline quality requires an integrated strategy. Nitrogen rejection is the key technology that would dictate the overall process, both technically and economically. In this investigation, three technologies were considered for nitrogen removal: (i) the cryogenic process, (ii) PSA, and (iii) selective absorption. The cryogenic process was assessed to be unacceptable for gob gas enrichment due to its sensitivity to the presence of impurities in the feed stream. Both PSA and selective absorption were considered to be flexible enough to handle flow rate and compositional variations of gob gas. From a cost perspective, both technologies were found to be comparable, with PSA being more favorable since oxygen removal does not appear to be necessary as the initial step.

Two integrated approaches were developed around these two nitrogen rejection technologies. These approaches included catalytic deoxygenation, carbon dioxide removal (using amine or membrane technologies), and conventional dehydration. The projected economic return for a specific PSA-based gas enrichment system was determined to be favorable. Therefore, either strategy (e.g., using PSA or selective absorption for nitrogen removal) is deemed to be ready for a field demonstration to validate its technical, operational and economic performance, and for introduction into the marketplace to facilitate the commercialization of a presently wasted gas resource.

4.0 GAS GATHERING CONSIDERATIONS

Previous sections of this report have addressed: (i) gob gas and coalbed methane extraction techniques utilized at coal mines, and (ii) gas utilization/commercialization alternatives. This section discusses the considerations that need to be addressed in order to connect the upstream gob gas source with the downstream gas enrichment (or conversion) facility.

The purpose of the gas gathering system is to provide a safe and economic means of transporting the produced gas from each gob well to a central gas processing facility. The gathering system design must address: (i) physical constraints of terrain, (ii) estimates of gas production, (iii) quality of gas and contaminants produced, and (iv) pressure limitations. Gas is usually produced from a vertical gob well up the casing. Once the gas reaches the surface, it would be piped to a drip-pot, two-phase separator, to remove entrained water from the gas. The gas would then be piped through an appropriately sized field collection pipeline to a gas scrubber to remove any remaining water before the gas enters the facility.

The gob wells are used to vent methane gas from the mine to create safe operating conditions within the mine. Therefore, it is critical that a safety system be installed to ensure that the gob well continues to vent gas in the event that the gas processing facility or pipeline are inoperative. Normally-closed safety relief valves would be placed on each gob well to respond to an increase in pressure. If back pressure increases at the gob well (due to pipeline restriction, facility shut-down or any other reason), the safety valve would automatically open and vent the produced gas at the well. The safely release valve would remain open until manually reset and safe operating conditions are resumed. In addition to a safety release valve on each gob well, safety release valves would also be placed on the gas gathering pipeline. These safety release valves would also activate in response to high back pressure, and vent gas when unsafe conditions occur.

The gas gathering pipeline would be a low pressure system that would utilize the gob wellhead pressure at the discharge of a blower/exhauster to deliver the produced gas through an appropriately sized pipeline to the gas processing facility. A central vacuum facility may also be used to draw gas from multiple wells. Because of the low pressure system and the need to reduce pressure losses due to friction, polyethylene pipe would be used. (Polyethylene pipe is typically used for the majority of all newly installed low pressure gas and oil pipelines.)

Produced gob gas is typically saturated with water vapor which must be considered in designing the gathering system. As warm gas cools at the surface, it loses some of its ability to carry water and the water therefore condenses. The water condensate accumulates at low points along the pipeline and can restrict the flow of gas or even damage the pipeline. Water also separates from gas: (i) when the gas passes from a smaller to larger diameter pipe (which reduces the gas flow velocity), and (ii) at angled sections along the pipeline where there is turbulent flow.[42] A small drip-pot, two-phase water separator placed at each gob well would remove free water, but would not remove water vapor from the produced gas.[43] The closer the two-phase separator is placed to the gob well, the lower the potential for free water accumulations to disturb gas flow. The most economic and efficient technique to remove water condensate from the gas gathering pipeline is a water drip placed at strategic low points in the pipeline. A water drip is simply a short length of pipe connected into the pipeline. The drip collects water and allows drainage of the water through a valve at the end of the drip line.

These drips can be operated manually or automatically. The pipeline should be installed with a minimum amount of slope reversals to reduce the amount of drips required.

Problems with water in gas pipelines increase during periods of low temperature because the conditions for condensation are intensified. The conditions are most severe during the winter months when ice can form in the pipeline. Even small amounts of ice in gas flow lines increases the back pressure and reduces gas production from the gob wells. This condition cannot be allowed to occur since the mine operator relies on the gob wells to remove gas from the mine. To prevent ice formation in gas pipelines, electric heat tape and insulation should be installed on all exposed pipelines.

A gas gathering system cannot be easily modified, once installed, without sacrificing economics or effectiveness. Therefore, the design should carefully consider both the initial requirements, as well as long-term requirements. Reasonable estimates of production and pressure are used as the basis for the pipeline design. The design flow estimates must be verified as early as possible in order to make practical adjustments. Undersized pipelines can be paralleled with an additional pipeline; however, oversized pipelines cannot be reasonably replaced with properly sized pipe, and neither case is economic or efficient. Therefore, the appropriate size of pipe must be carefully determined.

The above considerations would be addressed in the design of the gob gas gathering system. The top priority of the overall gas collection and utilization operations would be to ensure continued safe mining operations. Therefore, the entire project must be integrated, coordinated and implemented in order to effectively couple mine degasification activities with gas commercialization operations.

5.0 EXAMPLE COAL MINE CHARACTERISTICS

Two northern Appalachian coal mines and one central Appalachian mine have been characterized as being examples (e.g., prospective candidates) for gob gas enrichment projects. They are the Cyprus Cumberland Mine and Cyprus Emerald Mine in Pennsylvania, and the U.S. Steel Mining Co. Pinnacle #50 Mine in West Virginia. Many other mines that have project development potential are known to exist throughout the U.S. and the world.

The two primary requirements for selecting prospective coal mines to commercialize presently wasted gob gas are: (i) adequate supply of gob gas, and (ii) market for the enriched gas. Other characteristics and logistical considerations for the candidate mines were deemed to be secondary issues. The example coal mines produce non-pipeline quality gob gas that is presently being vented to atmosphere. Table 5 presents general characteristics of the mines.

Table 5. General Characteristics of Example Coal Mines

Example Coal Mine	Mining Method	Coal Production (MMtpy)	Gob Wells Per Panel	Average Gob Well Prod. (Mcfd)	Panel Gob Gas Prod. (MMcfd)	Gob Gas Quality (% CH_4)	Years of Coal Reserves / Gob Gas Longevity
Cumberland	Longwall	3-4	2-4	300-1,000	1-2	50-90	25
Emerald	Longwall	3	2-4	300-1,000	1-2	50-90	20
Pinnacle #50	Longwall	2	2-4	500-1,500	1-3	50-90	20

Table 6 presents selected considerations relative to market and logistical issues that need to be addressed for project development.

Table 6. Market and Logistical Considerations for Gob Gas Commercialization

Candidate Coal Mine	Ownership of Surface	Distance to Pipeline	Market Conditions
Cumberland	Mine and private	On Mine property	Pipeline can accept 2 MMcfd @ ~$2/MMBtu
Emerald	Mine and private	On Mine property	Pipeline can accept 2 MMcfd @ ~$2/MMBtu
Pinnacle #50	Mine and private	< 2 miles	Pipeline can accept 2 MMcfd @ ~$2/MMBtu

Based on Tables 5 and 6, the three candidate mines would satisfy the two primary criteria for enrichment of gob gas (e.g., gas supply and market access). Recent total mine methane emissions for each mine are: Cumberland - 7 MMcfd; Emerald - 5 MMcfd; and Pinnacle - 8 MMcfd, as provided by the Mine Safety and Health Administration (MSHA). The market for pipeline quality gas is deemed to be relatively good for all three mines (e.g., distance to pipeline(s), surface ownership by each mine and private owners, and current market price).

An obvious issue that must be addressed for implementation of a gas enrichment project at any prospective mine site is acceptance by the mine operator. The operators of the above mines are very progressive in their approach to mining and recognize the benefits to be derived from degasification efforts and gas commercialization. Other mine operators are becoming increasingly more receptive to methane commercialization in conjunction with their mining due to increased competitiveness in the coal industry and awareness of degasification benefits (e.g., improved safety, enhanced mining productivity, financial and environmental benefits, etc.).

6.0 SUMMARY

Methane contained in coal seams has plagued coal producers for centuries due to safety problems caused by gas emissions into their mine workings. To cope with this hazardous situation, mine operators dilute underground methane concentrations by circulating large volumes of air through ventilation systems, and vent gas to atmosphere using gob gas extraction boreholes, in-seam boreholes, vertical wells, and other methane drainage systems. This is a waste of a valuable energy resource and may have an adverse effect on the environment. Therefore, the economic potential and environmental benefits that would be realized through the commercialization of methane produced in conjunction with coal mining activities are vast. Another low-quality gas resource that has high potential, but more uncertainty, is the gas associated with abandoned coal mines. It is envisioned that this resource would be evaluated for commercialization after more information is obtained regarding potential gas volumes and quality.

The obvious alternatives to exploit this gas resource involve use of the gas in direct combustion processes such electric power generation. Throughout the 1980's and into the 1990's, depressed economic conditions in the industrialized regions of the U.S. created a surplus of electric power generating capacity that resulted in reduced demand (and cost) for incremental power sources. Therefore, this utilization option had limited appeal (despite a favorable regulatory environment). Processes to convert gas to other products, or enrich the gas to pipeline quality for direct sale, were deemed to be acceptable gas utilization candidates.

The project was formulated into two phases. The purpose of Phase 1 was to evaluate the gas resource associated with mining, and identify and evaluate various gas utilization technologies. Phase 2 would consist of a pilot demonstration of the technology deemed to have the most promise for commercializing this resource. The targeted resources were low-quality gob gas produced in conjunction with mining, and pipeline quality methane produced in advance of mining. The primary gas utilization objectives of the project were to identify and evaluate existing processes for: (i) use of gas as a feedstock for production of marketable commodities, and (ii) enriching contaminated gas to pipeline quality for subsequent sale. Satisfying the first objective, if achievable, was a higher priority since the technology would have broader application (e.g., pipeline access would not be required).

The technology alternatives considered under both the conversion and enrichment scenarios would be required to accommodate relatively low volumes of methane flow and varying gas quality. The primary contaminants of the untreated gas stream would be air, carbon dioxide and water vapor. Since one of the priorities established for the project was to consider only commercially available technologies, the principal problems to be addressed were that of economically downsizing the process applications, and tailoring the gas processing scheme to the characteristics of the fuel source. Processes that traditionally have a high gas feedstock cost as a relatively large component of the total product cost were deemed to be the most desirable. This was because the incremental cost of gathering the produced methane (after it is extracted as a required operation of mining) is relatively low and would result in lower overall product costs. The processing objective was to identify a technology through which the value added to the gas resource could be maximized, thereby enhancing the economics of methane commercialization. Furthermore, high value-added products (specialty chemicals, etc.) were desired since they could be readily marketed.

The following gas conversion technologies were evaluated: (i) transformation to liquid fuels, (ii) manufacture of methanol (and perhaps further processing to acetic acid), (iii) synthesis of mixed alcohols, and (iv) conversion to ammonia and urea. All of these processes involve a two-step conversion; synthesis gas is produced from the gas stream and then converted to the ultimate products. The synthesis gas, a mixture of carbon monoxide and hydrogen, may be produced either by steam reforming or by methane partial oxidation. In practice, a combination of steam reforming and partial oxidation is used to generate carbon monoxide and hydrogen in the right proportion for the hydrocarbons/chemicals product slate of interest. Natural gas steam reforming typically produces a hydrogen-rich synthesis gas, the hydrogen from which, in principle, can be separated and used in a furnace. The production of hydrocarbons or chemicals from the synthesis gas is governed by the catalysts employed, reaction conditions and type of reactors used. Two types of reactors have been used for hydrocarbon synthesis: a packed-bed reactor and a slurry reactor. It was determined that for the gob gas conversion application, a slurry reactor would be more appropriate.

Most of the conversion technologies evaluated were found to be mature processes operating at a large scale. A major drawback in all of the processes was the need to have a relatively pure feedstock, thereby requiring gas clean-up prior to conversion. As a result, gas enrichment would be needed in any conversion application and could not be avoided. Despite this requirement, the conversion technologies evaluated were preliminarily found to be marginally economic. However, the prohibitively high estimated investment for a combined gas enrichment/conversion facility required that REI refocus the project to investigation of gas enrichment technologies.

Enrichment of a gas stream with only one contaminant is a relatively simple process using available technology. Most of the gas separation technology developed to date addresses this problem. However, gob gas has a unique nature, consisting of five primary constituents: methane, nitrogen, oxygen, carbon dioxide and water vapor. Each of the four contaminants may be separated from the methane using existing technologies that have varying degrees of complexity and compatibility. The safety, operating efficiency and cost effectiveness of the combined system is dependent on careful integration of the separation processes.

Rejection of nitrogen from methane is one of the more difficult problems from a gas separation perspective. The nitrogen rejection unit was determined to be the most critical and costly component of the system. Three technologies were identified as potentially being suitable for nitrogen removal: (i) cryogenics, (ii) selective absorption, and (iii) PSA. Cryogenic separation has been a standard process of choice, on a larger scale. This process was not as competitive on a small scale as the other two processes. The cryogenic process was also found to be very sensitive to the presence of impurities, and was considered to be inappropriate for the gob gas application.

The application of the selective absorption process for nitrogen rejection from a conventional natural gas source has been performed. The process utilizes different solubilities of nitrogen and methane in specific solvents to effect the separation. The solvent/feed contacting is carried out in a conventional packed-column system. The PSA process for nitrogen rejection from natural gas sources has also been demonstrated. The process generally consists of the following four steps: (i) pressurization, (ii) adsorption and subsequent recycle, (iii) depressurization, and (iv) purge or evacuation. The separation is accomplished using molecular sieves which exploit different equilibrium adsorption capacities for different

gases, such as methane and nitrogen. Typically, four to five adsorbent beds would be used for the expected flow rates for the gob gas application. The selective absorption process would respond to the variable composition and flow rate of the feed by adjusting the solvent/feed ratio. In PSA, the cycle times and the recycle ratio are adjusted to maintain a specified product composition for changing feed flow rates and compositions.

Both the selective absorption and PSA processes were assessed to be acceptable from both technical and economic perspectives. The overall hydrocarbon recoveries in both processes were similar and the capital and operating costs were also comparable. A primary difference between the selective absorption and PSA processes is their ability to handle oxygen. The selective absorption process requires oxygen removal prior to nitrogen rejection, whereas the PSA process removes most of the oxygen during the nitrogen separation process. Therefore, a smaller quantity of oxygen would have to be treated in the gas stream using PSA, thereby simplifying the operation and reducing the cost. Care must be exercised in designing a PSA nitrogen rejection system, however, to ensure that gas mixtures passing through the explosive range are handled properly to maintain adequate operating safety.

The oxygen separation component added complexity to the integrated gas enrichment concept. Catalytic combustion was the process determined to be the best suited for the gob gas application. The process may possibly be performed adiabatically or at lower temperatures using hydrogen as additional fuel. The adiabatic approach was favored due to safety and cost considerations. The adiabatic combustion unit would generally be designed to handle the maximum concentration of oxygen expected in the gas stream.

Technologies for carbon dioxide and water removal are well established. Carbon dioxide rejection (if required) may be accomplished using an amine absorption process, membrane separation (or possibly, a PSA process). Either the amine or membrane processes were determined to be suitable for the gob gas application. The PSA process was anticipated to still be experimental in nature and not as mature as the other alternatives. Therefore, PSA was not recommended for initial use to remove carbon dioxide. Conventional water removal techniques (e.g., glycol dehydration, membrane separation, etc.) are very adequate.

In summary, the system design that is expected to be the most favorable from both technical and economic viewpoints is a facility consisting of: (i) a PSA or selective absorption nitrogen rejection unit (with PSA having an advantage over solvent extraction), (ii) a catalytic combustion deoxygenation process, (iii) an amine or membrane carbon dioxide removal system (if required), and (iv) a conventional dehydration unit. These independent components must be effectively integrated and coupled with the methane source to ensure achievement of desired process results. The economic evaluation revealed attractive results, even under conservative assumptions.

A Phase 2 pilot demonstration of a waste gas enrichment facility using the general approach described above is planned. In addition to the economic benefits to be derived, such a project would directly address certain requirements of: (i) Section 1306 of The Energy Policy Act of 1992, and (ii) Action #36 of the Administration's Climate Change Action Plan.[44] The pilot project is expected to constitute a proof-of-concept demonstration of an integrated commercial process that is ready for testing and introduction into the marketplace. REI intends to develop concurrent projects on a global scale to facilitate the commercialization of a previously-wasted resource and the enhancement of environmental conditions. Financial and

degasification benefits would accrue to the coal mine operators resulting in improved mining economics.

7.0 REFERENCES

1. U.S. Environmental Protection Agency, Anthropogenic Methane Emissions in the United States: Estimates for 1990, Report for Congress, EPA 430-R-93-003, April 1993.

2. Von Schonfeldt, H., Pothini, B.R., Aul, G.N. and Henderson, R.L., "Production and Utilization of Coalbed Methane Gas in Island Creek Coal Company Mines," in Proceedings of the SPE/DOE Unconventional Gas Recovery Symposium, SPE/DOE 10817, May 1982.

3. Owen, W.L. and Esbeck, D.W., "Industrial Gas Turbine Systems for Gob Gas to Energy Projects," Solar Turbines Incorporated, San Diego, CA, 1988.

4. Glickert, R.W., "Opportunities for the Utilization of Mine Ventilation Air," Presented to the Coalbed Methane Ad-Hoc Technical Group and the U.S. EPA Global Change Division, March 7, 1991.

5. Trevits, M.A., Finfinger, G.L., and LaScola, J.C., "Evaluation of U.S. Coal Mine Emissions," Proceedings of 5th US Mine Ventilation Symposium, 1991.

6. Kravits, S., Schwoebel, J. and Chiari, D., "Utilization of Horizontal In-Mine Gob Ventilation Boreholes at Cambria Slope No. 33 Mine," Paper 9338, Proceedings of the 1993 International Coalbed Methane Symposium, May 1993.

7. Fields, H.H., Cervik, J., and Goodman, T.W., "Degasification and Production of Natural Gas from an Air Shaft in the Pittsburgh Coalbed," U.S. Bureau of Mines Report of Investigation 8173, 1976, p. 21.

8. Hagood, D.W., Pate, R.C., and Stevenson, J.W., "Methane Control in an Advancing Section of an Underground Coal Mine (Contract SO395033, Jim Walters Resources, Inc.)," U.S. Bureau of Mines OFR 94-84, 1983, pp. 39; NTIS: PB 84-185057.

9. Carter, R.A., "Underground Developments in Methane Recovery," COAL, December 1990.

10. Schwoebel, J.J., "Coalbed Methane: Conversion of a Liability to an Asset," Mining Engineering, April 1987.

11. Mills, R. and Stevenson, J.W., "History of Methane Drainage at Jim Walters Resources, Inc.," Paper 9133, Proceedings of the 1991 Coalbed Methane Symposium, The University of Alabama, Tuscaloosa, Alabama, 1991.

12. Kravits, S.J., Sainato, A., and Finfinger, G.L., "The Advantages of In-Hole Motor Drilling," Coal Mining, vol. 21, No. 11, November 1984, pp. 44-46.

13. Kravits, S.J. and Schwoebel, J.J., "Directional Drilling Techniques for Exploration In-Advance of Mining," Proceedings of the 1993 Longwall U.S.A. Conference, Pittsburgh, Pennsylvania, 1993.

14. Mavor, M.J. and Schwoebel J.J., "Simulation Based Selection of Underground Coal Mine Degasification Methods," Paper 9132, Proceedings of the 1991 Coalbed Methane Symposium, The University of Alabama, Tuscaloosa, Alabama, 1991. May 13-16.

15. Patton, S.B., Fan, H., Novak, T., Johnson, P.W., and Sanford, R.L., "Degasification Model Incorporates Reservoir Simulation with Ventilation Package," COAL, vol. 98, No. 2, February 1993, pp. 52-53.

16. Diamond, W.P., Bodden, W.R., III, Zuber, M.D., and Schraufnagel, R.A., "Measuring the Extent of Coalbed Gas Drainage After Ten Years of Production at the Oak Grove Pattern, Alabama," Proceedings of the 1989 Coalbed Methane Symposium, The University of Alabama, Tuscaloosa, April 17-20, 1989, pp. 185-194.

17. Lambert, S.W., Graves, S.L., and Jones, A.H., "Warrior Basin Drilling, Stimulation Covered," Oil and Gas Journal, November, 13, 1989.

18. Diamond, W.P. and Oyler, D.C., "Effects of Stimulation Treatments on Coalbeds and Surrounding Strata," U.S. Bureau of Mines Report of Investigation No. 9083, 1987, p. 47.

19. Puri, R. Stein, M.H.: "Method of Coalbed Methane Production," U.S. Patent 4,883,122.

20. Puri, R. and Yee, D., "Enhanced Coalbed Methane Recovery," SPE 20732, Presented at the 65th Annual Technical Conference and Exhibition of the Society of Petroleum Engineers, New Orleans, Louisiana, September 23-26, 1990.

21. ——— "Nitrogen Work in Coalbeds Wins Award for AMOCO," Western Oil and Gas World, June, 1993.

22. U.S. Department of the Interior, Office of the Solicitor, "Ownership of and Right to Extract Coalbed Gas in Federal Coal Deposits," Memorandum M-36935, May 12, 1981.

23. Wright, T.R., "Ownership of Coalbed Gas -- Legal Analysis: USS v. Hoge and Rayburn v. USX," Coalbed Methane Special Institute, Eastern Mineral Law Foundation, November 3-4, 1988.

24. Patten, P.A. and Jones, A.S., "Virginia Coalbed Methane Regulations, Legal and Technical Perspectives," October 19, 1989.

25. Kirk-Othmer Encyclopedia of Chemical Technology, Fuels, Synthetic Liquid, vol. 11, p. 473, and Hydrogen, vol. 12, p. 169-306, John-Wiley & Sons, New York, 1980, Martin Grayson, Executive Editor/ David Eckroth, Associate Editor.

26. Lunsford, J.: "The Catalytic Conversion of Methane to Higher Hydrocarbons," Stud. Surf. Sci. Cata.-Natural Gas Conversion, vol. 3 p. 61, 1990.

27. Reed, C.L. and Kuhre, C.J., "Make Syn Gas by Partial Oxidation," Hydrocarbon Processing, 59 (9), p. 191-194, 1979.

28. Ullmann's Encyclopedia of Industrial Chemistry, Carbon Dioxide, vol. A5, p. 160-183, and Gas Processing, vol. 12, p. 169-306, VCH Verlagsgesellschaft mbH, Weinheim, Germany, 1986, 5th ed., Wolfgana Gerhartz, Executive Editor/Barbara Elvers ed.

29. Stinson, S., "Carbon Dioxide Recovered from Fuel Gases," Chem. Eng. News, 1982, 60 (41), 33.

30. Eilers, J., Posthuma, S.A., and Sie, S.T., "The Shell Middle Distillate Synthesis Process (SMDS)," Catal. Lett., 1990, 7, p. 253-270.

31. Bartholomew, C., "Recent Technological Developments in Fischer-Tropsch Catalysis," Catal. Lett., 1990, 7, p. 303.

32. DOE/PE 0093, "Methanol Production and Transportation Costs," 1989.

33. Solbakken, A., Natural Gas Conversion Ch., Synthesis Gas Production, Elsevier, 1991, p. 447.

34. Riensche, E., et al., Natural Gas Conversion, Ch., "Conversion of Natural Gas to CO-Rich Syngas," Elsevier, 1991, p. 541.

35. Heredy, L., Personal Communications with Dr. Stokes of Hydro-Chem, Inc., 1993.

36. Lurgi Publication, "Octamix, a Variation of Lurgi's Low-Pressure Methanol Process," 1987.

37. Sawy, A.H., "Evaluation of Mixed Alcohol Production Processes and Catalysts," SAND89-7151, 1990.

38. Engineering Resources, Inc., "Biological Production of Methanol from Methane," Research Summary, 1991.

39. GRI-91/0092, 1991, "Evaluation of Process Costs for Small Scale Nitrogen Removal from Natural Gas," Topical Report, Gas Research Institute, Chicago, Illinois.

40. Mehra, Y.R., Wood, G.C., and Ross, M.M., "Noncryogenic N_2 Rejection Process Gets Hugoton Field Test," Oil and Gas Journal, May 24, 1993, p. 62-71.

41. GRI-90/0290, 1990, "Comparison of the Mehra Process for N_2 Rejection to a Cryogenic Process for N_2 Rejection for Subquality Natural Gas," Topical Report, Gas Research Institute, Chicago, Illinois.

42. "Petroleum Engineering Handbook," Society of Petroleum Engineers, Richardson, Texas, 1987.

43. "A Guide to Coalbed Methane Operations," Gas Research Institute, 1992.

44. Clinton, William J. and Gore, Jr., Albert, The Climate Change Action Plan, October 1993.

EXHIBIT A

ECONOMIC EVALUATION OF A PSA-BASED GOB GAS ENRICHMENT FACILITY

EXHIBIT A

ASSUMPTIONS FOR ECONOMIC EVALUATION

Gas Production

The starting point for the economic analysis was an estimate of future production from the vertical gob gas wells utilized in the Mine degasification plan. Using data from various mines throughout the U.S., the projected production flow rates depicted on page 1 of the attached Exhibit A spreadsheet were formulated. This flow rate information was used to create the projected annual production for years 1994 through 2013. The gas production rates are summarized on page 1, together with the shrinkage/fuel use percentage for feedstock gas used in the enrichment facility.

Gas Price

Three potential gas markets were reviewed in order to establish the initial gas price, transportation rate, and meter installation fees reflected on page 1. These initial rates were then escalated by a projected annual inflation factor (4%). The Gas Research Institute predicts the following price projections in its publication, The Long-Term Trends In U.S. Gas Supply and Prices: 1993 Edition of the GRI Baseline Projection of U.S. Energy Supply and Demand to 2010, March 1993.

Lower-48 Gas Acquisition Prices (1992 $/MMBtu):

Source	1991*	1995	2000	2005	2010
Lower-48 Gas Production	1.52	1.73	2.26	2.65	3.14
Imports	1.78	1.91	2.43	2.84	3.27
Supplemental Supplies	3.44	3.48	3.54	3.83	4.15
Average	1.56	1.77	2.29	2.68	3.16
Average (nominal $)	1.51	1.94	3.08	4.49	6.63

* Actuals

Gas Revenue

Gross gas revenue is calculated on page 1 of the Exhibit A spreadsheet utilizing estimated gross gas production from gob wells, gas price, shrinkage/fuel use percentage, and the estimated Btu content of the sales gas. The average Btu content of the Mine sales gas is assumed to be 970 Btus/scf for this economic simulation. The Mine's share of gross gas revenue is derived by multiplying total gas sales by the Mine's assumed revenue interest of 80.0%.

Sales Gas Specifications

The average quality specifications for natural gas deliveries into the Questar, Northwest Pipeline, and Columbia transportation systems were utilized to derive the following sales gas quality specifications for use in the economic model:

		BASE CASE
1.	SOLIDS	Free of
2.	OXYGEN	10 ppm
3.	NITROGEN *	Max. 3%
4.	CARBON DIOXIDE *	Max. 3%
5.	HYDROGEN SULFIDE	1/4 Grain/100
6.	TOTAL SULFUR	20 Grains/100
7.	LIQUIDS	Free of
8.	WATER VAPOR	7 lbs/MMcf
9.	HYDROCARBON DEW POINT	15° @ 100-1000 psi
10.	HEATING VALUE	Min. 980 Btus/scf
11.	TEMPERATURE	Max. 120°
12.	DELIVERY PRESSURE	100 - 800 psig
*	TOTAL INERTS (COMBINED)	Max. 3%

Feed Gas Specifications

The average quality specifications for gob gas are detailed below. These specifications were derived from analyzing gas samples from the gob areas of the Cyprus Cumberland Mine, Greene County, Pennsylvania; the Cyprus Emerald Mine, Greene County, Pennsylvania; and the Soldier Canyon Mine, Carbon County, Utah.

		FEED GAS BASE CASE	RELEVANT RANGE
1.	SOLIDS AND LIQUIDS	Free of	
2.	OXYGEN	3%	2% to 6%
3.	NITROGEN	16%	9% to 26%
4.	CARBON DIOXIDE	3%	3% to 9%
5.	HYDROGEN SULFIDE	0%	
6.	TOTAL SULFUR	0%	
7.	METHANE	78%	65% to 85%
8.	WATER VAPOR	800 lbs/MMcf	
9.	HEATING VALUE	750 Btus/scf	650 to 850
10.	TEMPERATURE	50°	45° to 70°
11.	DELIVERY PRESSURE	14.7 psia	

Depreciable Costs

The depreciable expenditures are detailed on page 2 of the Exhibit A spreadsheet, for the individual components of the gas gathering system, gas enrichment facility, and the sales gas pipeline and meter station.

Depreciation

The Modified Accelerated Cost Recovery System was used to calculate the depreciation allowance on the majority of tangible property costs, based on a seven year recovery period and 200% declining balance method. No salvage value is assumed in the calculation and the half year convention is utilized. Straight-line depreciation is used for the pipeline right-of-way, based on a ten year useful life.

Depletion

A depletion allowance (both cost and statutory) is calculated for tax purposes in the model.

Intangible Drilling and Development Costs

The Mine analysis assumes that the mine operator has already drilled and is currently venting gob gas. Thus, the costs incurred in drilling the gob gas production wells are treated as sunk costs and not considered in this evaluation.

Operating Expenses

Operating expenses are those costs incurred to cover the field operations necessary to produce, clean-up and sell the gas generated by the project. These costs include salaries and wages, employee benefits, well service and workover, repairs, fuel and utilities, supplies, auto and truck, supervision, maintenance, indirect cost allocation, insurance, water disposal, etc. The operating expenses in the model assume a staff of two full-time field personnel.

Division of Interest

The economic model assumes there is one working interest owner in the project. The net revenue interest associated with a 100% working interest, after royalty burdens, is approximately 80.0%.

Taxes

Income taxes calculated by the model include federal income taxes (35%) and state income and franchise taxes (10% combined rate). The highest marginal tax rates were used for conservatism. The alternative minimum tax was not considered in this analysis.

- A 5% severance tax was assessed on the value of all severed minerals.
- The ad valorem tax rate was calculated using the West Virginia state formula.

- Conservation tax on gas production was not considered in the model.

Nonconventional Fuel Tax Credit

Coal gas production, under certain specified conditions, is eligible for a nonconventional fuel tax credit established under Section 29 of the Internal Revenue Code. The tax credit applies to qualified fuels produced from wells drilled between December 31, 1979, and January 1, 1993, produced in the U.S., and sold to an unrelated party for a lawful price during the taxable year. Production from qualifying properties is subject to the tax credit until January 1, 2003. The tax credit is allocated on the basis of revenue interests. The value of this credit is estimated to be $0.97/Mcf for 1994, and is escalated by the model at the annual inflation rate.

Greenhouse Gas Offset Credit

No value for any *greenhouse gas offset credit* (potential benefit for mitigating the release of methane to the atmosphere) was assumed in the base case.

FILE NAME: DOEMODEL.XLS

EXHIBIT A

RESOURCE ENTERPRISES, INC.
COMMERCIALIZATION OF PREVIOUSLY-WASTED COAL MINE GOB GAS AND COALBED METHANE
ECONOMIC EVALUATION OF PROCESSING ALTERNATIVE A
MODEL #1
SEPTEMBER 1998

DESCRIPTION	1994	1995	1996	1997	1998	1999	2000	2001	2002	2003	2004	2005	2006	2007	2008	2009	2010	2011	2012	2013	TOTALS
GENERAL INPUT DATA:																					
INFLATION RATE	0.0400	0.0400	0.0400	0.0400	0.0400	0.0400	0.0400	0.0400	0.0400	0.0400	0.0400	0.0400	0.0400	0.0400	0.0400	0.0400	0.0400	0.0400	0.0400	0.0400	
INTEREST RATE	0.0700	0.0700	0.0700	0.0700	0.0700	0.0700	0.0700	0.0700	0.0700	0.0700	0.0700	0.0700	0.0700	0.0700	0.0700	0.0700	0.0700	0.0700	0.0700	0.0700	
WORKING INTEREST %	1.0000	1.0000	1.0000	1.0000	1.0000	1.0000	1.0000	1.0000	1.0000	1.0000	1.0000	1.0000	1.0000	1.0000	1.0000	1.0000	1.0000	1.0000	1.0000	1.0000	
REVENUE INTEREST %	0.0000	0.0000	0.0000	0.0000	0.0000	0.0000	0.0000	0.0000	0.0000	0.0000	0.0000	0.0000	0.0000	0.0000	0.0000	0.0000	0.0000	0.0000	0.0000	0.0000	
ROYALTY INTEREST %	0.1250	0.1250	0.1250	0.1250	0.1250	0.1250	0.1250	0.1250	0.1250	0.1250	0.1250	0.1250	0.1250	0.1250	0.1250	0.1250	0.1250	0.1250	0.1250	0.1250	
ORR INTEREST %	0.0750	0.0750	0.0750	0.0750	0.0750	0.0750	0.0750	0.0750	0.0750	0.0750	0.0750	0.0750	0.0750	0.0750	0.0750	0.0750	0.0750	0.0750	0.0750	0.0750	
GAS PRICE (PER MMBTU)	2.40	2.50	2.60	2.70	2.81	2.92	3.04	3.16	3.28	3.42	3.55	3.69	3.84	4.00	4.16	4.32	4.50	4.67	4.86	5.06	
TRANSPORTATION (MCF)	0.32	0.33	0.35	0.36	0.37	0.39	0.40	0.42	0.44	0.46	0.47	0.49	0.51	0.53	0.55	0.58	0.60	0.62	0.65	0.67	
SALES GAS BTU VALUE	970.0	970.0	970.0	970.0	970.0	970.0	970.0	970.0	970.0	970.0	970.0	970.0	970.0	970.0	970.0	970.0	970.0	970.0	970.0	970.0	
B/O/Y GAS RESERVES	20,805,000	20,805,000	19,710,000	18,615,000	17,520,000	16,425,000	15,330,000	14,235,000	13,140,000	12,045,000	10,950,000	9,855,000	8,760,000	7,665,000	6,570,000	5,475,000	4,380,000	3,285,000	2,190,000	1,095,000	
SHRINKAGE/ FUEL USE %	30.50%	30.50%	30.50%	30.50%	30.50%	30.50%	30.50%	30.50%	30.50%	30.50%	30.50%	30.50%	30.50%	30.50%	30.50%	30.50%	30.50%	30.50%	30.50%	30.50%	
% CH4 IN SALES STREAM	95.00%	95.00%	95.00%	95.00%	95.00%	95.00%	95.00%	95.00%	95.00%	95.00%	95.00%	95.00%	95.00%	95.00%	95.00%	95.00%	95.00%	95.00%	95.00%	95.00%	
TOTAL GAS PRODUCTION	0	1,095,000	1,095,000	1,095,000	1,095,000	1,095,000	1,095,000	1,095,000	1,095,000	1,095,000	1,095,000	1,095,000	1,095,000	1,095,000	1,095,000	1,095,000	1,095,000	1,095,000	1,095,000	1,095,000	20,805,000
SALES GAS VOLUME (MCF)	0	761,025	761,025	761,025	761,025	761,025	761,025	761,025	761,025	761,025	761,025	761,025	761,025	761,025	761,025	761,025	761,025	761,025	761,025	761,025	14,459,475
GROSS SALES PROCEEDS	0	1,842,533	1,916,254	1,992,884	2,072,599	2,155,503	2,241,723	2,331,392	2,424,648	2,521,633	2,622,499	2,727,399	2,836,495	2,949,954	3,067,953	3,190,671	3,318,298	3,451,029	3,589,071	3,732,633	50,983,151
SEVERANCE TAX RATE	0.05	0.05	0.05	0.05	0.05	0.05	0.05	0.05	0.05	0.05	0.05	0.05	0.05	0.05	0.05	0.05	0.05	0.05	0.05	0.05	
CONSERVATION TAX RATE	0.00	0.00	0.00	0.00	0.00	0.00	0.00	0.00	0.00	0.00	0.00	0.00	0.00	0.00	0.00	0.00	0.00	0.00	0.00	0.00	
AD VALOREM TAX RATE	0.04	0.04	0.04	0.04	0.04	0.04	0.04	0.04	0.04	0.04	0.04	0.04	0.04	0.04	0.04	0.04	0.04	0.04	0.04	0.04	
FEDERAL INCOME TAX %	0.35	0.35	0.35	0.35	0.35	0.35	0.35	0.35	0.35	0.35	0.35	0.35	0.35	0.35	0.35	0.35	0.35	0.35	0.35	0.35	
STATE INCOME TAX RATE	0.10	0.10	0.10	0.10	0.10	0.10	0.10	0.10	0.10	0.10	0.10	0.10	0.10	0.10	0.10	0.10	0.10	0.10	0.10	0.10	
SEC. 29 TAX CREDIT (MCF)	0.97	1.01	1.05	1.09	1.13	1.18	1.23	1.28	1.33												
TOTAL TAX CREDITS	0	1,104,636	1,148,821	1,194,774	1,242,565	1,292,268	1,343,959	1,397,717	1,453,626	0	0										10,178,366
COST DEPLETION RATE	0.0000	0.0526	0.0556	0.0588	0.0625	0.0667	0.0714	0.0769	0.0833	0.0909	0.1000	0.1111	0.1250	0.0000	0.0000	0.0000	0.0000	0.0000	0.0000	0.0000	
STATUTORY DEPLETION %	0.1500	0.1500	0.1500	0.1500	0.1500	0.1500	0.1500	0.1500	0.1500	0.1500	0.1500	0.1500	0.1500	0.1500	0.1500	0.1500	0.1500	0.1500	0.1500	0.1500	
DEPRECIATION RATES	0.1429	0.2449	0.1749	0.1249	0.0893	0.0892	0.0893	0.0446													
FOOTAGE DRILLED																					0
EXTERNAL FUNDING %	0.00	0.00	0.00	0.00	0.00	0.00	0.00	0.00	0.00	0.00	0.00	0.00	0.00	0.00	0.00	0.00	0.00	0.00	0.00	0.00	

DESCRIPTION	1994	1995	1996	1997	1998	1999	2000	2001	2002	2003	2004	2005	2006	2007	2008	2009	2010	2011	2012	2013	TOTALS
GENERAL INPUT DATA CONT.:																					
CAPITAL EXPENDITURES:																					
DEPLETABLE COSTS:																					
LEASEHOLD COST																					0
LEGAL																					0
TOTAL DEPLETABLE COSTS	0	0	0	0	0	0	0	0	0	0	0	0	0	0	0	0	0	0	0	0	0
CUMULATIVE	0	0	0	0	0	0	0	0	0	0	0	0	0	0	0	0	0	0	0	0	
DEPRECIABLE COSTS:																					
ACCELERATED DEPR.:																					
SURVEYING	2,500																				2,500
ROAD AND LOCATION	50,000																				50,000
VERTICAL WELL COST	0																				0
SALES PIPELINE	121,072																				121,072
VACUUM PUMPS	0																				0
GAS FLOW METER	8,000																				8,000
GAS ANALYZER	2,000																				2,000
DEHYDRATORS	18,000																				18,000
COMPRESSORS	600,000																				600,000
N2 REJECTION FACILITY	1,200,000																				1,200,000
O2 REJECTION EQUIPMENT	300,000																				300,000
CO2 & H2O REJ. EQUIP.	400,000																				400,000
FACILITY INSTRUMENTATION	200,000																				200,000
GAS GATHERING EQUIP.:																					0
WELLHEADS	20,000																				20,000
FLOWLINES	236,000																				236,000
METERS	30,000																				30,000
SAFETY EQUIPMENT	110,000																				110,000
TOTAL (A) DEPRECIABLE COSTS	3,298,452	0	0	0	0	0	0	0	0	0	0	0	0	0	0	0	0	0	0	0	3,298,452
CUMULATIVE	3,298,452	3,298,452	3,298,452	3,298,452	3,298,452	3,298,452	3,298,452	3,298,452	3,298,452	3,298,452	3,298,452	3,298,452	3,298,452	3,298,452	3,298,452	3,298,452	3,298,452	3,298,452	3,298,452	3,298,452	
S/L DEPRECIABLE COSTS:																					
PIPELINE RIGHT-OF-WAY	103,050																				103,050
COMPRESSOR R-O-W	20,000																				20,000
LEGAL	1,000																				1,000
TOTAL DEPLETABLE COSTS	124,050	0	0	0	0	0	0	0	0	0	0	0	0	0	0	0	0	0	0	0	124,050
CUMULATIVE	124,050	124,050	124,050	124,050	124,050	124,050	124,050	124,050	124,050	124,050	124,050	124,050	124,050	124,050	124,050	124,050	124,050	124,050	124,050	124,050	
S/L DEPR. USEFUL LIFE	10																				

WORKING INTEREST OWNER - CASH FLOW ANALYSIS
COMMERCIALIZATION OF PREVIOUSLY-WASTED COAL MINE GOB GAS AND COALBED METHANE

DESCRIPTION	1994	1995	1996	1997	1998	1999	2000	2001	2002	2003	2004	2005	2006	2007	2008	2009	2010	2011	2012	2013	TOTALS
REVENUES:																					
NET GAS SALES	0	1,474,026	1,532,987	1,594,307	1,658,079	1,724,402	1,793,378	1,865,114	1,939,718	2,017,306	2,097,999	2,181,919	2,269,196	2,359,968	2,454,362	2,552,557	2,654,658	2,760,825	2,871,257	2,986,106	40,780,121
SALE OF ASSETS	0	0	0	0	0	0	0	0	0	0	0	0	0	0	0	0	0	0	0	500,000	500,000
INTEREST	0	600	600	600	600	600	600	600	600	600	600	600	600	600	600	0	0	0	0	0	8,400
TOTAL REVENUES	0	1,474,626	1,533,587	1,594,907	1,658,679	1,725,002	1,793,978	1,865,714	1,940,318	2,017,906	2,098,599	2,182,519	2,269,796	2,360,568	2,454,962	2,552,557	2,654,658	2,760,825	2,871,257	3,486,106	41,296,521
OPERATING EXPENSES:																					
SALARIES AND WAGES	70,059	72,800	75,712	78,740	81,890	85,165	88,572	92,115	95,800	99,632	103,617	107,762	112,072	116,555	121,217	126,066	131,109	136,353	141,807	147,479	2,084,466
EMPLOYEE BENEFITS	21,000	21,840	22,714	23,622	24,567	25,550	26,572	27,635	28,740	29,890	31,085	32,329	33,622	34,967	36,365	37,820	39,333	40,906	42,542	44,244	625,340
WELL SERVICE & WORKOVER	0	0	0	0	15,000	0	0	0	0	20,000	0	0	0	0	25,000	0	0	0	0	0	60,000
REPAIRS	24,000	25,960	27,998	30,118	32,325	34,626	37,001	39,481	42,080	44,742	47,532	50,453	53,451	56,589	59,832	63,236	66,776	70,447	74,265	78,256	999,126
FUEL, WATER, & LUB.	4,000	4,992	5,192	5,399	5,615	5,840	6,074	6,316	6,569	6,832	7,105	7,389	7,685	7,992	8,312	8,645	8,990	9,350	9,724	10,113	142,935
COMPRESSOR MAINTENANCE	20,000	20,800	21,632	22,497	23,397	24,333	25,306	26,319	27,371	28,466	29,605	30,789	32,021	33,301	34,634	36,019	37,460	38,958	40,516	42,137	595,502
SUPPLIES	2,400	2,496	2,594	2,698	2,806	2,918	3,035	3,156	3,282	3,413	3,550	3,692	3,840	3,994	4,154	4,320	4,493	4,672	4,859	5,053	71,432
HORIZONTAL BOREHOLE	0	0	0	0	0	0	0	0	0	0	0	0	0	0	0	0	0	0	0	0	0
EXPENSED INTANGIBLES	0	0	0	0	0	0	0	0	0	0	0	0	0	0	0	0	0	0	0	0	0
ENGINEERING DESIGN	300,000	200,000	0	0	0	0	0	0	0	0	0	0	0	0	0	0	0	0	0	0	500,000
AUTO & TRUCK	6,000	6,240	6,490	6,749	7,019	7,300	7,592	7,896	8,211	8,540	8,881	9,237	9,606	9,990	10,390	10,806	11,238	11,687	12,155	12,641	178,688
SUPERVISION	60,000	62,400	64,896	67,492	70,192	72,999	75,919	78,956	82,114	85,399	88,815	92,367	96,062	99,904	103,901	108,057	112,379	116,874	121,549	126,411	1,706,685
PIPELINE ROW MAINTENANCE	3,000	3,120	3,245	3,375	3,510	3,650	3,796	3,948	4,106	4,270	4,441	4,618	4,803	4,995	5,195	5,403	5,619	5,844	6,077	6,321	89,354
INDIRECT COST ALLOCATION	0	0	0	0	0	0	0	0	0	0	0	0	0	0	0	0	0	0	0	0	0
SEVERANCE TAX	0	73,701	76,649	79,715	82,904	86,220	89,669	93,256	96,986	100,865	104,900	109,096	113,460	117,998	122,718	127,627	132,732	138,041	143,563	149,305	2,059,406
CONSERVATION TAX	0	0	0	0	0	0	0	0	0	0	0	0	0	0	0	0	0	0	0	0	0
AD VALOREM TAX	0	59,993	62,393	64,888	67,484	70,183	72,991	75,910	78,947	82,104	85,389	88,804	92,356	96,051	99,893	103,888	108,044	112,366	116,860	121,535	1,688,077
GAS TRANS. FEE	0	202,615	210,720	219,149	227,915	237,031	246,512	256,373	266,628	277,293	288,385	299,920	311,917	324,394	337,369	350,864	364,899	379,495	394,674	410,461	5,086,814
INSURANCE	50,000	52,000	54,080	56,243	58,493	60,833	63,266	65,797	68,428	71,166	74,012	76,973	80,052	83,254	86,584	90,047	93,649	97,395	101,291	105,342	1,488,904
WATER DISPOSAL	0	0	0	0	0	0	0	0	0	0	0	0	0	0	0	0	0	0	0	0	0
CONTRACT PUMPER	0	0	0	0	0	0	0	0	0	0	0	0	0	0	0	0	0	0	0	0	0
DEMOBILIZATION	0	0	0	0	0	0	0	0	0	0	0	0	0	0	0	0	0	0	0	200,000	200,000
DEPRECIATION	403,752	820,194	509,302	424,380	306,955	306,625	306,955	159,514	12,408	12,408	0	0	0	0	0	0	0	0	0	0	3,422,492
DEPLETION	0	0	229,948	239,146	248,712	258,660	269,007	279,767	290,958	302,596	314,700	327,288	340,379	353,994	368,154	382,881	398,196	414,123	430,689	447,916	5,897,114
TOTAL EXPENSES	1,044,952	1,629,351	1,453,974	1,324,839	1,258,492	1,283,089	1,325,594	1,218,019	1,114,448	1,179,730	1,194,420	1,243,397	1,294,335	1,347,366	1,427,399	1,459,684	1,519,282	1,581,253	1,645,704	1,912,752	27,457,670
NET INCOME BEFORE TAX	(1,044,952)	(154,725)	79,613	270,069	399,047	441,913	470,384	647,694	825,870	838,176	904,179	939,122	975,465	1,013,257	1,027,564	1,092,842	1,135,336	1,179,570	1,225,553	1,573,375	13,839,851
INCOME TAX / (BENEFIT)	(470,228)	(69,626)	35,826	121,531	179,571	198,897	211,673	291,463	371,641	377,179	406,881	422,605	438,958	455,965	462,404	491,779	510,960	530,806	551,499	708,019	6,227,735
TAX CREDITS	0	883,780	919,057	955,819	994,052	1,033,814	1,075,167	1,118,174	1,162,900	0	0	0	0	0	0	0	0	0	0	0	8,142,688
NET INCOME AFTER TAX	(574,724)	798,610	962,844	1,104,357	1,213,528	1,276,911	1,333,878	1,474,405	1,617,129	460,997	497,298	516,517	536,505	557,291	565,160	601,063	624,446	648,763	673,054	865,356	15,754,501
ADJUST TO CASH BASIS:																					
CAPITAL COST	(3,422,492)	0	0	0	0	0	0	0	0	0	0	0	0	0	0	0	0	0	0	0	(3,422,492)
DEPRECIATION	403,752	820,194	509,302	424,380	306,955	306,625	306,955	159,514	12,408	12,408	0	0	0	0	0	0	0	0	0	0	3,422,492
DEPLETION	0	0	229,948	239,146	248,712	258,660	269,007	279,767	290,958	302,596	314,700	327,288	340,379	353,994	368,154	382,881	398,196	414,123	430,689	447,916	5,897,114
NET CASH FLOW	(3,513,454)	1,618,804	1,702,095	1,767,883	1,769,195	1,842,196	1,909,840	1,913,687	1,920,490	775,996	811,998	843,805	876,884	911,285	933,314	983,944	1,022,642	1,062,887	1,104,743	1,313,272	21,631,585

		@ 10%	@ 20%	@ 30%	CHECK @ IRR
NET PRESENT VALUE PROFILE		8,608,990	3,909,211	1,532,241	0
INTERNAL RATE OF RETURN		48.436%			

COMMERCIALIZATION OF PREVIOUSLY-WASTED COAL MINE GOB GAS AND COALBED METHANE
SUTIS INFORMATION:

DESCRIPTION	1994	1995	1996	1997	1998	1999	2000	2001	2002	2003	2004	2005	2006	2007	2008	2009	2010	2011	2012	2013	TOTALS
GROSS GAS SALES	0	1,842,355	1,916,234	1,992,884	2,072,599	2,155,503	2,241,723	2,331,392	2,424,648	2,521,633	2,622,499	2,727,399	2,836,485	2,949,904	3,067,900	3,190,676	3,318,298	3,451,029	3,589,071	3,732,630	50,985,151
SALE OF ASSETS																				500,000	500,000
INTEREST		800	800	800	800	800	800	800	800	800	800	800	800	800	800						8,000
TOTAL REVENUES	0	1,843,155	1,916,834	1,993,484	2,073,199	2,156,103	2,242,523	2,331,992	2,425,248	2,522,233	2,623,099	2,727,999	2,837,085	2,950,704	3,068,500	3,190,676	3,318,298	3,451,029	3,589,071	4,232,630	51,488,151
OPERATING EXPENSES:																					
SALARIES AND WAGES	70,000	72,800	75,712	78,740	81,890	85,166	88,572	92,115	95,800	99,632	103,617	107,762	112,072	116,555	121,217	126,066	131,109	136,353	141,807	147,479	2,084,666
EMPLOYEE BENEFITS	21,000	21,840	22,714	23,622	24,567	25,550	26,572	27,635	28,740	29,890	31,085	32,329	33,622	34,967	36,365	37,820	39,333	40,906	42,542	44,244	625,940
WELL SERVICE/ WORKOVER	0	0	0	0	15,000	0	0	0	0	20,000	0	0	0	0	25,000	0	0	0	0	0	60,000
REPAIRS	24,000	25,500	27,998	30,118	32,323	34,616	37,001	39,481	42,060	44,742	47,532	50,433	53,451	56,589	59,832	63,246	66,776	70,447	74,263	78,226	959,126
FUEL, WATER, & LUB.	4,800	4,992	5,192	5,399	5,615	5,840	6,074	6,316	6,569	6,832	7,105	7,389	7,685	7,992	8,312	8,645	8,990	9,350	9,724	10,113	142,985
COMPRESSOR MAINTENANCE	20,000	20,800	21,632	22,497	23,397	24,333	25,306	26,319	27,371	28,466	29,605	30,789	32,021	33,301	34,634	36,019	37,460	38,958	40,516	42,137	595,962
SUPPLIES	2,400	2,496	2,596	2,700	2,808	2,920	3,037	3,158	3,285	3,416	3,554	3,696	3,844	3,998	4,158	4,324	4,497	4,677	4,864	5,059	71,590
ROYALTIES	0	177,708	184,879	192,274	199,965	207,964	216,282	224,934	233,931	243,288	253,020	263,149	273,686	284,613	295,997	307,837	320,151	332,957	346,275	360,126	4,919,086
OVERRIDING ROYALTIES	0	106,682	110,927	115,365	119,979	124,778	129,769	134,949	140,359	145,973	151,812	157,884	164,200	170,768	177,598	184,702	192,090	199,774	207,765	216,075	2,951,640
HORIZONTAL BOREHOLE	0	0	0	0	0	0	0	0	0	0	0	0	0	0	0	0	0	0	0	0	0
EXPENSED INTANGIBLES	0	0	0	0	0	0	0	0	0	0	0	0	0	0	0						0
ENGINEERING DESIGN	300,000	300,000	0	0	0	0	0	0	0	0	0	0	0	0	0						300,000
AUTO & TRUCK	6,000	6,240	6,490	6,749	7,019	7,300	7,592	7,896	8,211	8,540	8,881	9,237	9,606	9,990	10,390	10,806	11,238	11,687	12,155	12,641	178,402
SUPERVISION	60,000	62,400	64,896	67,492	70,192	72,999	75,919	78,956	82,114	85,399	88,815	92,367	96,062	99,904	103,901	108,057	112,379	116,874	121,549	126,411	1,706,693
PIPELINE ROW MAINTENANCE	3,000	3,120	3,245	3,375	3,510	3,650	3,796	3,948	4,106	4,270	4,441	4,618	4,803	4,995	5,195	5,403	5,619	5,844	6,077	6,320	89,334
INDIRECT COST ALLOCATION	0	0	0	0	0	0	0	0	0	0	0	0	0	0	0	0	0	0	0	0	0
SEVERANCE TAX	0	92,127	95,812	99,644	103,630	107,775	112,086	116,570	121,232	126,082	131,125	136,370	141,825	147,498	153,398	159,534	165,915	172,551	179,454	186,632	2,549,258
CONSERVATION TAX	0	0	0	0	0	0	0	0	0	0	0	0	0	0	0	0	0	0	0	0	0
AD VALOREM TAX	0	74,991	77,991	81,110	84,355	87,729	91,238	94,888	98,685	102,630	106,736	111,005	115,445	120,063	124,866	129,860	135,055	140,457	146,075	151,918	2,093,886
GAS TRANS. FEE	0	253,269	263,400	273,936	284,893	296,289	308,141	320,466	333,285	346,616	360,481	374,900	389,896	405,492	421,712	438,580	456,123	474,368	493,343	513,077	7,088,268
INSURANCE	50,000	52,000	54,080	56,243	58,493	60,833	63,265	65,797	68,428	71,166	74,012	76,973	80,052	83,254	86,584	90,047	93,649	97,395	101,291	105,342	1,488,904
WATER DISPOSAL	0	0	0	0	0	0	0	0	0	0	0	0	0								0
CONTRACT PUMPER	0	0	0	0	0	0	0	0	0	0	0	0	0	0	0	0	0	0	0	0	0
DEMOBILIZATION	0	0	0	0	0	0	0	0	0	0	0	0	0	0	0	0	0	0	0	200,000	200,000
DEPRECIATION	403,732	820,194	509,302	424,300	306,955	306,625	306,955	159,514	12,400	12,400	0	0	0	0	0	0	0	0	0	0	3,422,402
DEPLETION	0	0	287,435	298,933	310,890	323,325	336,258	349,709	363,697	378,245	393,375	409,110	425,474	442,493	460,193	478,601	497,745	517,654	538,361	559,895	7,371,389
TOTAL EXPENSES	1,044,932	1,997,858	1,894,708	1,783,202	1,756,330	1,778,775	1,839,191	1,754,239	1,672,118	1,739,706	1,797,595	1,870,699	1,946,727	2,025,796	2,153,688	2,198,549	2,282,481	2,374,990	2,471,190	2,771,257	39,128,379
NET INCOME BEFORE TAX	(1,044,932)	(154,725)	22,126	210,282	336,869	377,328	403,132	577,753	753,130	782,527	825,504	857,300	890,358	924,758	955,525	997,122	1,035,817	1,076,039	1,117,881	1,461,396	12,360,172
INCOME TAX / (BENEFIT)	(470,220)	(69,626)	9,957	94,627	151,591	169,798	181,410	259,989	338,909	343,137	371,477	385,785	400,661	416,141	430,986	448,705	466,113	484,218	503,046	657,028	5,564,528
TAX CREDITS	0	1,104,656	1,148,821	1,194,774	1,242,565	1,292,268	1,343,959	1,397,717	1,453,626	0	0	0	0	0	0	0	0	0	0	0	10,178,586
ROYALTY TAX CREDITS	0	(220,927)	(229,764)	(238,955)	(248,513)	(258,454)	(268,792)	(279,545)	(290,725)	0	0	0	0	0	0	0	0	0	0	0	(2,035,679)
NET INCOME AFTER TAX	(574,724)	790,610	951,226	1,071,475	1,179,330	1,241,343	1,296,890	1,435,958	1,577,122	419,390	454,027	471,515	489,702	508,617	524,539	548,417	568,704	591,821	614,835	803,368	14,948,586
ADJUST TO CASH BASIS:																					
CAPITAL COST	(3,422,402)	0	0	0	0	0	0	0	0	0	0	0	0	0	0	0	0	0	0	0	(3,422,402)
DEPRECIATION	403,732	820,194	509,302	424,300	306,955	306,625	306,955	159,514	12,400	12,400	0	0	0	0	0	0	0	0	0	0	3,422,402
DEPLETION	0	0	287,435	298,933	310,890	323,325	336,258	349,709	363,697	378,245	393,375	409,110	425,474	442,493	460,193	478,601	497,745	517,654	538,361	559,895	7,371,389
NET CASH FLOW	(3,593,454)	1,610,804	1,807,964	1,794,707	1,797,175	1,871,293	1,940,103	1,945,160	1,953,222	810,038	847,402	880,625	915,177	951,110	984,732	1,027,018	1,067,449	1,109,476	1,153,195	1,363,263	22,314,989
RI SEC 29 TAX CREDITS		138,080	143,603	149,347	155,321	161,533	167,995	174,715	181,703	0	0	0	0	0	0	0	0	0	0	0	1,272,297
ORH SEC 29 TAX CREDITS		82,848	86,162	89,608	93,192	96,920	100,797	104,829	109,022	0	0	0	0	0	0	0	0	0	0	0	763,378
TOTAL ROYALTY TAX CREDITS		220,928	229,765	238,955	248,513	258,453	268,792	279,544	290,725	0	0	0	0	0	0	0	0	0	0	0	2,035,675

DESCRIPTION	1994	1995	1996	1997	1998	1999	2000	2001	2002	2003	2004	2005	2006	2007	2008	2009	2010	2011	2012	2013	TOTALS
ACCELERATED DEPRECIATION:																					
YEAR 1	471,349	807,791	576,899	411,977	294,552	294,222	294,552	147,111													3,298,452
YEAR 2		0	0	0	0	0	0	0	0												0
YEAR 3			0	0	0	0	0	0	0	0											0
YEAR 4				0	0	0	0	0	0	0	0										0
YEAR 5					0	0	0	0	0	0	0	0									0
YEAR 6						0	0	0	0	0	0	0	0								0
YEAR 7							0	0	0	0	0	0	0	0							0
YEAR 8								0	0	0	0	0	0	0	0						0
YEAR 9									0	0	0	0	0	0	0	0					0
YEAR 10										0	0	0	0	0	0	0	0				0
YEAR 11											0	0	0	0	0	0	0	0			0
YEAR 12												0	0	0	0	0	0	0	0		0
YEAR 13													0	0	0	0	0	0	0	0	0
YEAR 14														0	0	0	0	0	0	0	0
YEAR 15															0	0	0	0	0	0	0
YEAR 16																0	0	0	0	0	0
YEAR 17																	0	0	0	0	0
YEAR 18																		0	0	0	0
YEAR 19																			0	0	0
YEAR 20																				0	0
TOTAL	471,349	807,791	576,899	411,977	294,552	294,222	294,552	147,111	0	0	0	0	0	0	0	0	0	0	0	0	3,298,452
STRAIGHT-LINE DEPRECIATION:																					
YEAR 1	12,400	12,400	12,400	12,400	12,400	12,400	12,400	12,400	12,400	12,400											124,000
YEAR 2		0	0	0	0	0	0	0	0	0	0										0
YEAR 3			0	0	0	0	0	0	0	0	0	0									0
YEAR 4				0	0	0	0	0	0	0	0	0	0								0
YEAR 5					0	0	0	0	0	0	0	0	0	0							0
YEAR 6						0	0	0	0	0	0	0	0	0	0						0
YEAR 7							0	0	0	0	0	0	0	0	0	0					0
YEAR 8								0	0	0	0	0	0	0	0	0	0				0
YEAR 9									0	0	0	0	0	0	0	0	0	0			0
YEAR 10										0	0	0	0	0	0	0	0	0	0		0
YEAR 11											0	0	0	0	0	0	0	0	0	0	0
YEAR 12																					0
YEAR 13																					0
YEAR 14																					0
YEAR 15																					0
YEAR 16																					0
YEAR 17																					0
YEAR 18																					0
YEAR 19																					0
YEAR 20																					0
TOTAL	12,400	12,400	12,400	12,400	12,400	12,400	12,400	12,400	12,400	12,400	0	0	0	0	0	0	0	0	0	0	124,000
COST DEPLETION	0	0	0	0	0	0	0	0	0	0	0	0	0	0	0	0	0	0	0	0	

EXHIBIT A

DESCRIPTION	1994	1995	1996	1997	1998	1999	2,000	2,001	2,002	2,003	2,004	2,005	2,006	2,007	2,008	2,009	2,010	2,011	2,012	2,013	TOTALS
STATUTORY DEPLETION CALCULATION:																					
NET INCOME BEFORE DEPL.	(1,044,952)	(154,725)	309,561	309,215	647,759	700,654	739,391	927,461	1,116,828	1,140,772	1,218,879	1,266,410	1,315,842	1,367,252	1,395,718	1,475,725	1,553,552	1,593,693	1,656,242	2,021,291	19,736,365
15% OF GROSS INCOME	0	276,380	287,435	298,933	310,890	323,325	336,258	349,709	363,697	378,245	393,375	409,110	425,474	442,493	460,193	478,601	497,745	517,654	538,361	559,895	7,647,773
STATUTORY DEPLETION SUB.	0	0	287,435	298,933	310,890	323,325	336,258	349,709	363,697	378,245	393,375	409,110	425,474	442,493	460,193	478,601	497,745	517,654	538,361	559,895	7,371,398

DATE
FILMED
7/28/94

END