PLASMA PHYSICS

53/5-24-93 JS (2)

REVERSED-FIELD PINCH STUDIES IN THE MADISON SYMMETRIC TORUS

S. Hokin, A. Almagri, M. Cekic, B. Chapman, N. Crocker,
D.J. Den Hartog, G. Fiksel, J. Henry, H. Ji, S. Prager, J. Sarff, E. Scime,
W. Shen, M. Stoneking, G. Watts

DOE/ER/53198-218 April 1993

NOTICE

This report was prepared as an account of work sponsored by an agency of the United States Government. Neither the United States nor any agency thereof, nor any of their employees, makes any warranty, expressed or implied, or assumes any legal liability or responsibility for any third party's use or the results of such use of any information, apparatus, product or process disclosed in this report, or represents that its use by such third party would not infringe privately owned rights.

Printed in the United States of America
Available from
National Technical Information Service
U.S. Department of Commerce
5285 Port Royal Road
Springfield, VA 22161

NTIS Price codes
Printed copy: A02
Microfiche copy: A01

Reversed-field Pinch Studies in the Madison Symmetric Torus

S. Hokin, A. Almagri, M. Cekic, B. Chapman, N. Crocker,
D.J. Den Hartog, G. Fiksel, J. Henry, H. Ji, S. Prager,
J. Sarff, E. Scime, W. Shen, M. Stoneking, C. Watts
Department of Physics, University of Wisconsin, Madison, WI 53706

April 3, 1993

Abstract

Studies of large-size ($R = 1.5$ m, $a = 0.5$ m), moderate current ($I < 750$ kA) reversed-field pinch (RFP) plasmas are carried out in the Madison Symmetric Torus in order to evaluate and improve RFP confinement, study general toroidal plasma MHD issues, determine the mechanism of the RFP dynamo, and measure fluctuation-induced transport and anomalous ion heating. MST confinement has been improved by reduction of magnetic field errors with correction coils in the primary circuit and reduction of impurities using boronization; high densities have been achieved with hydrogen pellet injection. MHD tearing modes with poloidal mode number $m = 1$ and toroidal mode numbers $n = 5$–7 are prevalent and nonlinearly couple to produce sudden relaxations akin to tokamak sawteeth. Edge fluctuation-induced transport has been measured with a variety of insertable probes. Ions exhibit anomalous heating, with increases of ion temperature occuring during strong MHD relaxation. The RFP dynamo has been studied with attention to various possible mechanisms, including motion-EMF drive, the Hall effect,

MASTER

DISTRIBUTION OF THIS DOCUMENT IS UNLIMITED

and superthermal electrons. Initial profile control experiments have begun using insertable biased probes and plasma guns. The toroidal field capacity of MST will be upgraded during Summer, 1993 to allow low-current tokamak operation as well as improved RFP operation.

Keywords: reversed-field pinch, MHD instability, anomalous transport, anomalous ion heating, dynamo.

I. INTRODUCTION

The Madison Symmetric Torus (MST) (Fig. 1) is a large ($R = 1.5$ m, $a = 0.5$ m) toroidal confinement device which has been used since August, 1988 to produce reversed-field pinch (RFP) discharges of modest toroidal current ($I < 750$ kA). The toroidal field system will be upgraded during Summer, 1993 to allow low-current tokamak operation as well. The MST program is oriented towards evaluating and improving RFP confinement, studying toroidal plasma MHD activity, measuring fluctuation-induced transport, determining the RFP dynamo mechanism, understanding anomalous ion heating, and pursuing concept improvements such as externally applied current drive or profile control.

The RFP differs from the tokamak in the greatly reduced toroidal magnetic field. In the RFP, the toroidal and poloidal components of the magnetic field are comparable ($B_\phi \sim B_\theta$), where in the tokamak, $B_\phi \gg B_\theta$. Both components of the RFP magnetic field are powered by the 'poloidal field' circuit which drives the toroidal current — the toroidal field is produced by poloidal current in the outer part of the discharge which is driven by a dynamo mechanism. As a result, the direction of the toroidal field reverses on the edge of the plasma. The RFP field geometry has been shown to be a minimum-energy state subject to certain constraints [1].

The RFP has several advantages over the tokamak as a fusion reactor concept. The self-generation of toroidal field results in very modest toroidal field requirements and high plasma beta. The Ohmic power input in the RFP is increased over that of a tokamak due to geometric effects and the dynamo [2,3,4,5], which may also supply the extra power drawn directly by ions in 'anomalous' heating [6,7,8,9,10]. As a result, an RFP reactor may reach ignition with only Ohmic power input [11,12]. Its disadvantages include reduced confinement for a given toroidal current due to lower field and larger fluctuation levels, requirement of a close-fitting conducting shell or active feedback to mimic its effect in stabilizing external MHD modes, and the present lack of demonstrated current-drive schemes.

MST has several unique design features [13]. The 5-cm aluminum shell acts as a vacuum vessel, toroidal field winding and close-fitting shell for MHD external mode stability. The plasma is powered with a 2-Wb iron core transformer, which results in the 750 kA limit on toroidal current. MST has very few large port holes, resulting in excellent field uniformity and a high degree of toroidal symmetry. Fig. 2 displays waveforms from a typical MST discharge.

For the purposes of this article, the MST research program may be divided into the following categories, each treated in a section to follow: RFP confinement, MHD studies, edge fluctuations and transport, anomalous ion heating, dynamo mechanisms and RFP concept improvement. A brief summary is presented at the end.

II. RFP CONFINEMENT

The RFP performs well as a fusion reactor concept at large current with high plasma beta in a compact size. The TITAN RFP reactor design [11] has major, minor radii of $R = 3.9$ m, $a = 0.6$ m and toroidal current $I = 18$ MA with poloidal beta $\beta_\theta = 20\%$.

The improvement of RFP confinement with toroidal current may be seen from a few principles. First, an RFP will dissipate energy Ohmically (present RFPs have $T_i \sim T_e$, implying an Ohmic-like scaling for anomalous ion heating if electrons and ions have comparable energy confinement). The Ohmic power input may then be written

$$P_{OH} = I^2 R_p = I^2 f \frac{2\pi R}{\pi a^2} \eta, \tag{1}$$

where $f \sim 4$ is the geometric 'screw-up' factor which takes into account the fact that the bulk of Ohmic heating in an RFP is actually due to poloidal, not toroidal, plasma current, and $\eta \propto Z_{eff} T_e^{-3/2}$ is the Spitzer resistivity averaged appropriately across the profile which includes an enhancement factor to account for direct ion heating. Secondly, RFP devices are able to achieve a maximum beta value of 10–20% regardless of size or current, implying that $nT \propto I^2/a^2$. Thirdly, these highest beta values tend to occur near the empirical high-density radiation limit given by $I/N \sim 2 \times 10^{-14}$ A-m, so that $n \propto I/a^2$. The beta and density restrictions combine to imply $T \propto I$. As a result,

for constant f and Z_{eff}, the Lawson parameter $n\tau_E \propto I^{5/2}$ and the fusion product $n\tau_E T \propto I^{7/2}$. Fusion parameters would be achieved at the 20 MA level of the TITAN design; devices such as MST and even the 2 MA RFX experiment in Italy [14] are used to assess RFP confinement at conditions well below fusion levels. At this time, RFP confinement has maintained favorable scaling with current up to 0.5 MA; operation of RFX at 2 MA will provide a qualitative expansion of the scaling data.

There are factors which degrade the confinement in an RFP. One factor is the quality of the magnetic field at the surface of the plasma — a large radial field error can result in drastic increases in Ohmic power with corresponding reduction of τ_E. In MST, a large radial field error at the vertical gap in the shell accompanies the locking of magnetic oscillations [15] which occurs during a strong MHD relaxation event. This mode locking has been greatly reduced by the use of pre-programmed correction coils in the poloidal field circuit. A program of active feedback field error correction will be implemented in the future; other modifications of the external circuitry are implemented periodically to improve magnetic field flat-top, volt-second consumption, etc.

Another factor is impurity content. MST has an aluminum plasma-facing shell with small carbon limiters; the dominant impurities are carbon, oxygen and aluminum. Solid-target boronization [16] has effectively been used to reduce the oxygen concentration in the discharge. Nevertheless, large impurity bursts accompany strong MHD relaxation events which are particularly severe in MST as compared with other RFP devices.

Frozen hydrogen pellet injection has been used in MST as a possible means of achieving improved confinement. However, the pellet flight time of around 1 ms is comparable to the particle confinement time in the device, and the density profile therefore relaxes during the pellet penetration, resulting in confinement similar to the comparable gas-fueled case. Nevertheless, pellet injection is a useful operational tool as it provides a reliable way of transiently accessing the density limit for a given current, as shown in Fig. 3.

III. MHD STUDIES

The magnetic field geometry of the RFP leads to the presence of a number of MHD phenomena which have been studied intensively in MST. Tearing modes with poloidal mode number $m = 1$ and toroidal mode numbers $n \sim 2R/a$ are resonant in the plasma interior and are always present [17,18]. These modes usually rotate with poloidal frequency around 20 kHz and are found, using bispectral analysis, to nonlinearly couple to higher m, n modes as well as to the equilibrium ($m = 0, n = 0$) during sudden MHD relaxation events, similar to $m = 1, n = 1$ sawteeth in tokamaks [17,18]. These sudden relaxations have been termed 'discrete dynamo' events as they produce a large increase in toroidal flux along with deepened reversal (see Fig. 2).

Even though the internally-resonant MHD modes are usually not stationary in the lab frame, the several dominant modes typically maintain phase coherence and form a single, rotating disturbance [15] termed a 'slinky' mode when first seen in the OHTE device [19]. In addition to edge magnetic diagnostics, soft x-ray core emission tomography has been used to analyze the radial structure of the mode interaction [20].

Near the plasma edge, high-frequency, high-n modes are found which are locally resonant such that n changes sign as one crosses the reversal surface with a magnetic probe [21]. Unlike the global, internally resonant modes, these modes display less coherence between modes and shorter spatial coherence lengths.

IV. EDGE FLUCTUATIONS AND TRANSPORT

As part of the effort to understand anomalous transport in toroidal confinement devices, the MST group has an active program in analysis of edge fluctuations and transport. Insertable probes of many types are used in low-current discharges to measure fluctuations in magnetic field, current density, electric potential, plasma density and temperature, and heat flux. Fluctuations in two of these quantities are measured simultaneously in many identical discharges, and the ensemble-averaged correlation is used to extract the

contribution to radial particle or energy flux at the edge. For example, the correlated product $\langle \tilde{n}\tilde{\phi} \rangle$ leads to the radial particle flux induced by electrostatic fluctuations.

Electrostatic triple probes have been used to estimate the radial heat and particle flux due to electrostatic fluctuations [22]. The thermal heat flux due to electrostatic fluctuations is found to be small, whereas the particle flux is large enough to qualitatively account for the global particle confinement measured with an H_α diagnostic.

Magnetic probes have been used to estimate the nonambipolar component of radial particle flux due to magnetic fluctuations [21] by measurement of the correlated product $\langle \tilde{j}_{\|} \tilde{B}_r \rangle$. The radial particle transport is found to be ambipolar over the full frequency range encompassing both low-frequency global tearing mode activity and high-frequency locally resonant fluctuations. Given that the radial transport is ambipolar, the total particle flux may be found by measuring $\langle \tilde{j}_{e\|} \tilde{B}_r \rangle$, which is being pursued with the use of an electrostatic electron analyzer probe [23]. Development of an electrostatic ion analyzer is also underway.

Radial heat flux due to magnetic fluctuations is proportional to $\langle \tilde{q}_{\|} \tilde{B}_r \rangle$, where $q_{\|}$ is the parallel heat flux, dominated by superthermal electrons in the edge region [24]. A fast pyrobolometer probe has been developed [25] to pursue this measurement.

V. ANOMALOUS ION HEATING

Ions in RFP plasmas are heated much more strongly than can be accounted for by classical ion-electron friction. We have measured proton heating in MST with a five-channel charge-exchange analyzer (CXA) [26], and CV ion heating with a VUV spectrometer, both with fast time resolution (10 μs), and have found that the ion temperature exhibits rapid increases during discrete dynamo bursts [9,10] (Fig. 4) which are also periods of increased magnetic activity. This suggests a heating process which involves transfer of plasma turbulent energy to thermal ion energy. One scenario which has received attention is ion viscous damping [7]; a recently-proposed alternative is that of cyclotron damping of large-k modes [8]. Measurement of the $\tilde{B}$ spectrum in MST indicates an enhancement of fluctuations in the ion cyclotron frequency range during discrete dynamo activity [9,10].

VI. DYNAMO MECHANISMS

The 'dynamo' effect in the RFP refers to the plasma's ability to drive poloidal current in the outer region of the plasma, which provides the positive toroidal field in the plasma core and maintains reversal near the edge. The mechanism of the dynamo has not yet been determined experimentally, and MST has an active program with that goal.

If the dynamo is governed by a local relation, it is Ohm's law:

$$\mathbf{E} + \mathbf{V} \times \mathbf{B} = \eta \mathbf{J} + \frac{1}{ne} \mathbf{J} \times \mathbf{B}, \tag{2}$$

where we have included the Hall term. In the outer region of the plasma, $\mathbf{J}$ is predominantly poloidal and cannot be driven by the applied toroidal field, ie. $\mathbf{E} \cdot \mathbf{J} \sim 0$. The current may be driven by the motion-EMF dynamo term $\mathbf{V} \times \mathbf{B}$ or by other terms such as the Hall term shown above.

In the case of zero equilibrium flow, the motion-EMF term contributes as the spatial or temporal average of a second-order fluctuation product

$$\langle \tilde{\mathbf{V}} \times \tilde{\mathbf{B}} \rangle_\theta = \langle \tilde{V}_r \tilde{B}_\phi \rangle - \langle \tilde{V}_\phi \tilde{B}_r \rangle. \tag{3}$$

We are conducting measurements of this term in the plasma edge using probe techniques developed on the REPUTE device [27]. The $\langle \tilde{V}_\phi \tilde{B}_r \rangle$ term is being measured further into the plasma using a high-speed measurement of the Doppler shift of a carbon emission line for $\tilde{V}_\phi$.

A magnetic probe diagnostic has been used to measure the fluctuation Hall term $\langle \tilde{\mathbf{J}} \times \tilde{\mathbf{B}} \rangle$ in the plasma edge [28]. It is found to be non-negligible, but can account for no more than 25% of the dynamo-driven current.

An alternative, nonlocal description of the dynamo attributes the poloidal current in the edge to superthermal electrons which are generated in the core and rapidly transport outward [29]. A large fraction of the edge current is indeed found to be carried by superthermal electrons [23,24]. In addition, a large fraction of superthermal electrons is observed in the core [24], particularly in low-density discharges with high values of

E/E_c, where E_c is the critical field for electron runaway. We have an ongoing program of experiments to measure the contribution of superthermal electrons to the dynamo and determine their generation and transport mechanism.

VII. RFP CONCEPT IMPROVEMENT

In addition to conventional RFP operation, MST is used to test possible improvements to the RFP concept, such as current profile control. These studies are presently in the early stages, but will receive increased emphasis in the future. Initial studies of current profile control have been conducted using biased probes and plasma guns inserted into plasma edge. The hope is that one can flatten the current profile to reduce MHD turbulence and transport while assisting the dynamo and reducing its load on the poloidal circuit. Other possibilities being considered include fast wave and lower hybrid current drive.

VIII. SUMMARY

An extensive program of research is carried out on MST to study the underlying physics of RFP confinement, MHD activity, fluctuations and transport, ion heating, dynamo mechanisms and concept improvement. Starting in Fall, 1993, low-current tokamak operation will be available to compare phenomena in RFP and tokamak field geometry, as well as the low-q region in between. In this way, we hope to improve understanding of plasma heating, confinement and transport in toroidally-confined plasmas, regardless of geometry.

ACKNOWLEDGEMENTS

This work was supported by the US Department of Energy.

References

[1] J.B. Taylor, Rev. Mod. Phys. **58**, 741 (1986).

[2] J.W. Johnson, Plasma Phys. **23**, 187 (1981).

[3] K.F. Schoenberg, R.F. Gribble, and J.A. Phillips, Nucl. Fusion **22**, 1433 (1982).

[4] J.C. Sprott, Phys. Fluids **31**, 2266 (1988).

[5] W. Shen and J.C. Sprott, Phys. Fluids B **3**, 1225 (1991).

[6] C.G. Gimblett, Europhys. Lett. **11**, 541 (1990).

[7] Z. Yoshida, Nucl. Fusion **31**, 386 (1991).

[8] N. Mattor, S.C. Prager, and P. Terry, Comments on Plasma Phys. and Contr. Fusion **15**, 65 (1993).

[9] E. Scime, S. Hokin, N. Mattor, and C. Watts, Phys. Rev. Lett. **68**, 2165 (1992).

[10] E. Scime, M. Cekic, D.J. Den Hartog, S. Hokin, D. Holly, and C. Watts, Phys. Fluids B **4**, 4062 (1992).

[11] F. Najmabadi *et al.*, UCLA report UCLA-PPG-1200 UCLA (1990).

[12] K.A. Werley, Nucl. Fusion **31**, 567 (1991).

[13] R.N. Dexter, D. Kerst, T.W. Lovell, S.C. Prager, and J.C. Sprott, Fus. Technol. **19**, 131 (1991).

[14] G. Malesani, in *Proceedings of the International School of Plasma Physics Workshop on Physics of Mirrors, Reversed Field Pinches and Compact Tori, Varenna, Italy, 1986*, edited by S. Ortolani and E. Sindoni (Società Italiana di Fisica, Bologna, 1987), p. 359.

[15] A.F. Almagri, S. Assadi, S.C. Prager, J.S. Sarff, and D.W. Kerst, Phys. Fluids B **4**, 4080 (1992).

[16] D.J. Den Hartog, M. Cekic, G. Fiksel, S. Hokin, R. Kendrick, S. Prager, and M. Stoneking, J. Nucl. Mat. to be published (1993).

[17] S. Assadi, S.C. Prager, and K.L. Sidikman, Phys. Rev. Lett. **69**, 281 (1992).

[18] J. Sarff and *et al.*, Phys. Fluids B to be published (1993).

[19] T. Tamano, W.D. Bard, C. Chu, Y. Kondoh, R.J. LaHaye, P.S. Lee, M.T. Saito, M.J. Schaffer, and P.L. Taylor, Phys. Rev. Lett. **59**, 1444 (1987).

[20] George Chartas and Samuel Hokin, Phys. Fluids B **4**, 4019 (1992).

[21] W. Shen, R.N. Dexter, and S.C. Prager, Phys. Rev. Lett. **68**, 1319 (1992).

[22] T.D. Rempel, C.W. Spragins, S.C. Prager, S. Assadi, D.J.Den Hartog, and S.A. Hokin, Phys. Rev. Lett. **67**, 1438 (1991).

[23] T.D. Rempel, A.F. Almagri, S. Assadi, D.J. Den Hartog, S.A. Hokin, S.C. Prager, J.S. Sarff, W. Shen, K.L. Sidikman, C.W. Spragins, J.C. Sprott, M.R. Stoneking, and E.J. Zita, Phys. Fluids B **4**, 2136 (1992).

[24] S. Hokin, A. Almagri, S. Assadi, M. Cekic, B. Chapman, G. Chartas, N. Crocker, M. Cudzinovic, D.J. Den Hartog, R. Dexter, G. Fiksel, J. Henry, D. Holly, S. Prager, T. Rempel, J. Sarff, E. Scime, W. Shen, C. Sprott, M. Stoneking, and C. Watts, in *Plasma Physics and Controlled Nuclear Fusion Research, 1992*, (International Atomic Energy Agency, Vienna, 1992), p. to be published.

[25] G. Fiksel, J. Frank, and D. Holly, Rev. Sci. Instrum. submitted (1993).

[26] Earl Scime and Samuel Hokin, Rev. Sci. Instrum. **63**, 4527 (1992).

[27] H. Ji, H. Toyama, A. Fujisawa, S. Shinohara, and K. Miyamoto, Phys. Rev. Lett. **69**, 616 (1992).

[28] W. Shen and S.C. Prager, Phys. Fluids B to be published (1993).

[29] A.R. Jacobson and R.W. Moses, Jr., Phys. Rev. A **29**, 3335 (1984).

Figure Captions

Figure 1 The Madison Symmetric Torus (MST) can produce large-sized, moderate current RFP plasmas. A unique design feature is the 5" thick aluminimum shell which also acts as vacuum chamber and toroidal field winding. The toroid is pumped through many small holes to prevent field errors which would be produced around large portholes. The continuity windings allow the shell to carry a continuous toroidal image current without linking the core.

Figure 2 A typical MST discharge, displaying: (a) applied toroidal voltage, (b) plasma current, (c) line-averaged density, and (d) volume-average and edge toroidal magnetic field. MST is run in 'ramped mode', in which the toroidal flux is ramped up from a small initial value by dynamo action. Sudden MHD relaxation events are particularly evident in the toroidal field and represent discrete dynamo activity.

Figure 3 Hydrogen pellet injection provides a means of reliably accessing the RFP density limit around $I/N = 2 \times 10^{-14}$ A-m: (a) plasma current, (b) line-averaged density, (c) I/N. It is operationally difficult to run MST at the density limit with gas puff fueling alone due to excessive loading of hydrogen on the walls.

Figure 4 The ion temperature, measured with a 5-channel charge-exchange analyzer, exhibits sharp increases during strong MHD dynamo activity: (a) ion temperature, (b) edge toroidal magnetic field. Similar behavior is seen in impurity ions.

Madison Symmetric Torus

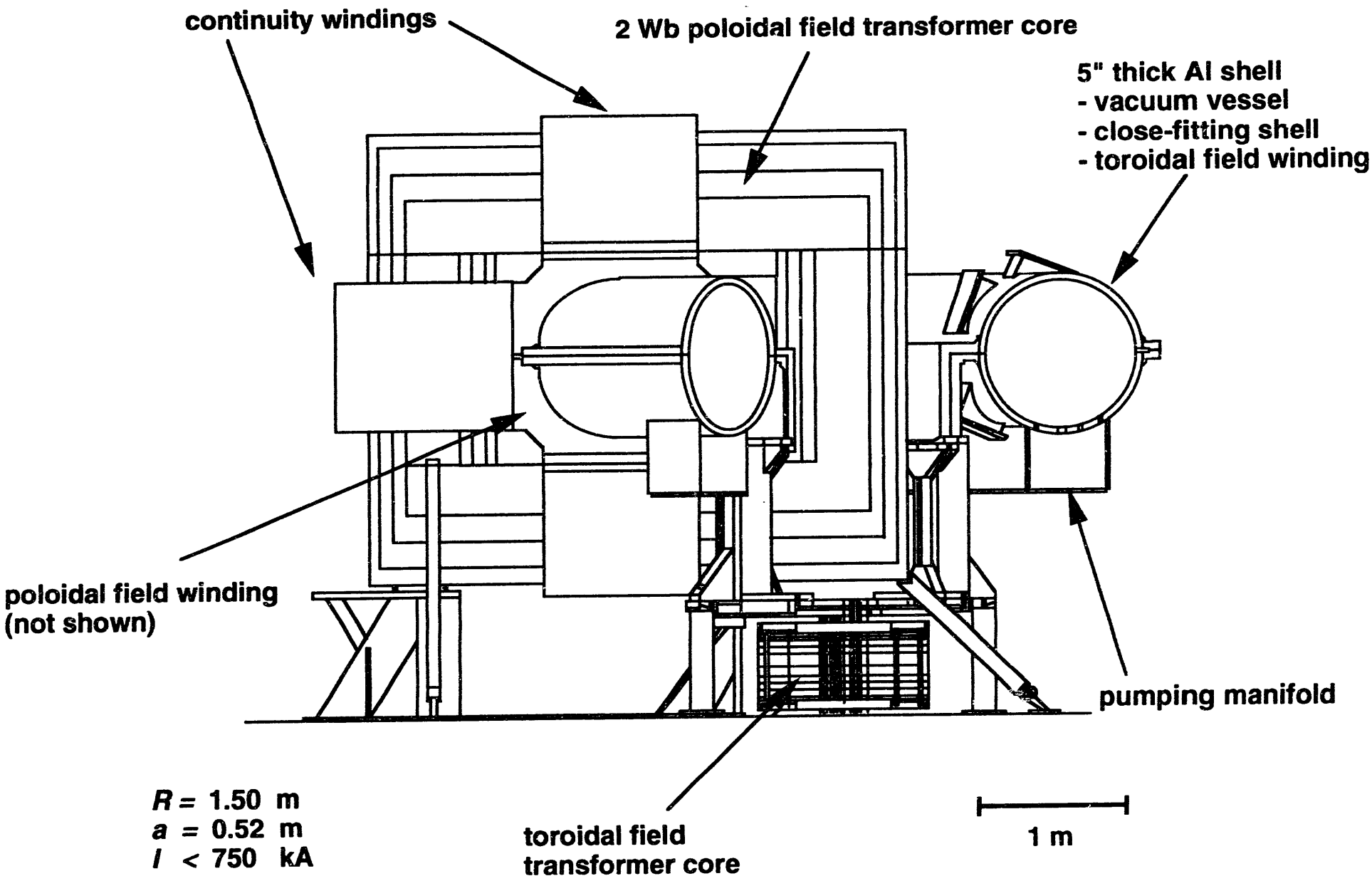

FIG. 1

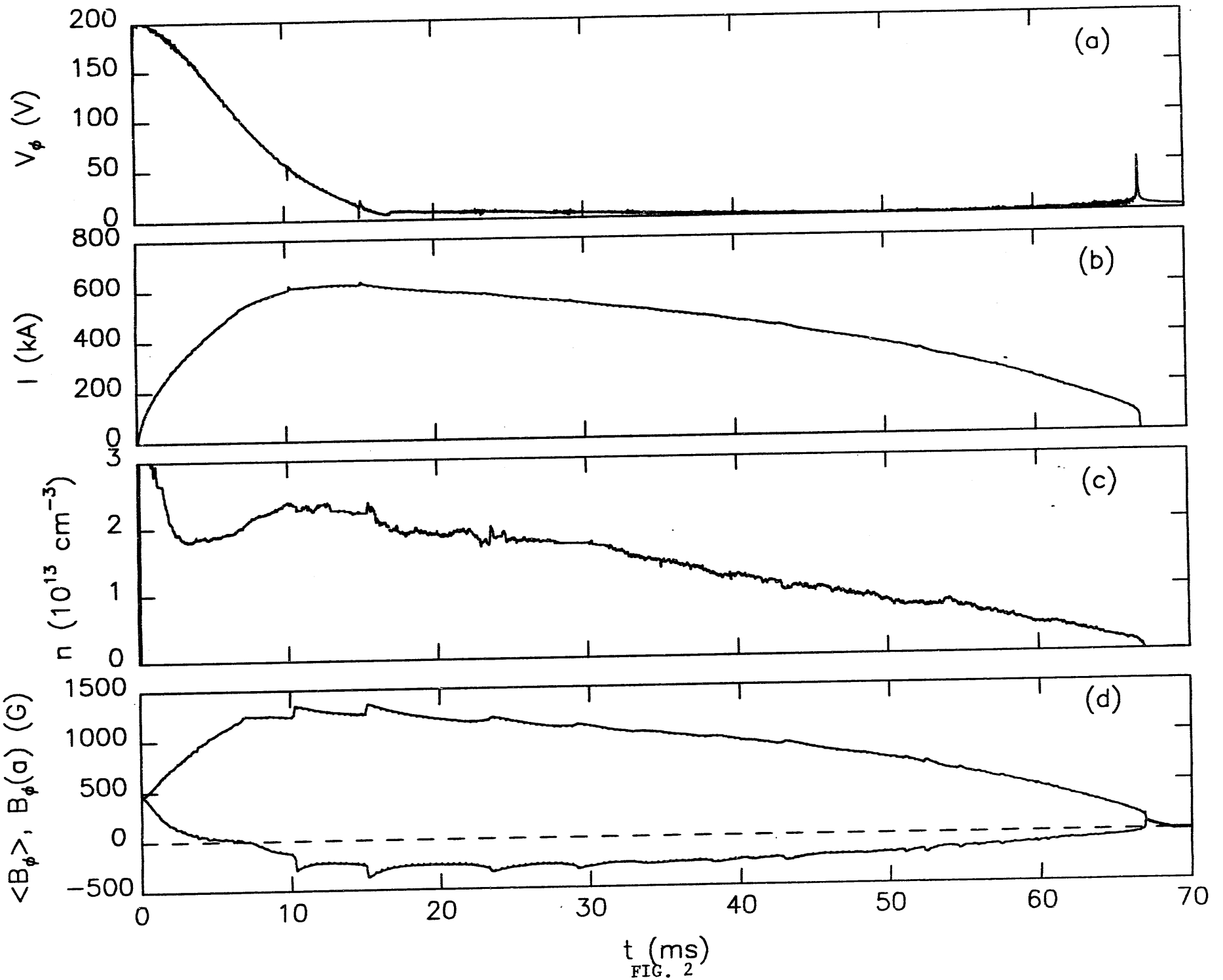
(a)
(b)
(c)
(d)
V_ϕ (V)
I (kA)
n (10^{13} cm^{-3})
<B_ϕ>, B_ϕ(a) (G)
t (ms)
200
150
100
50
0
800
600
400
200
0
3
2
1
0
1500
1000
500
0
−500
0
10
20
30
40
50
60
70

FIG. 2

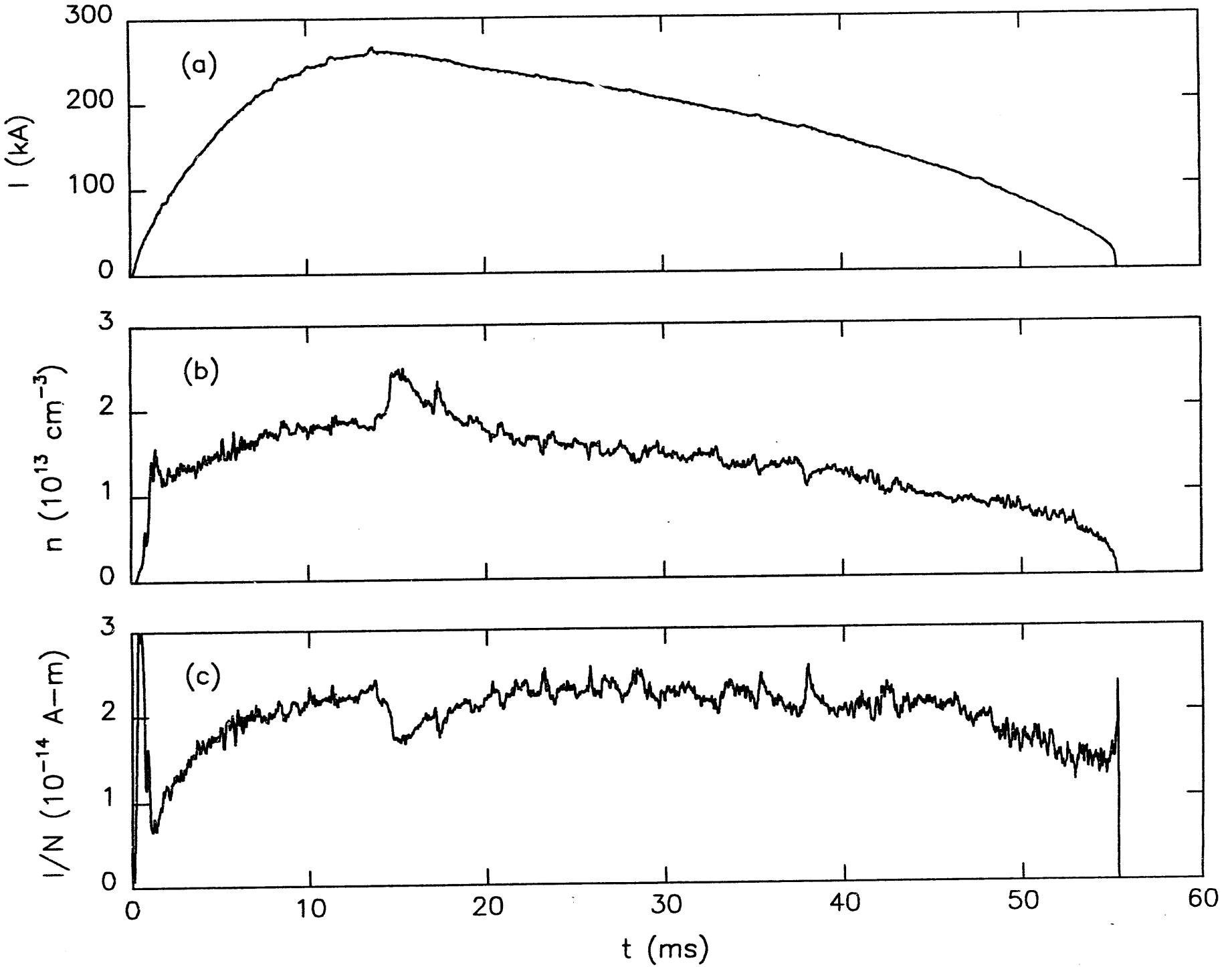
300
200
100
0
I (kA)
(a)
3
2
1
0
n (10^{13} cm^{-3})
(b)
3
2
1
0
I/N (10^{-14} A–m)
(c)
0
10
20
30
40
50
60
t (ms)

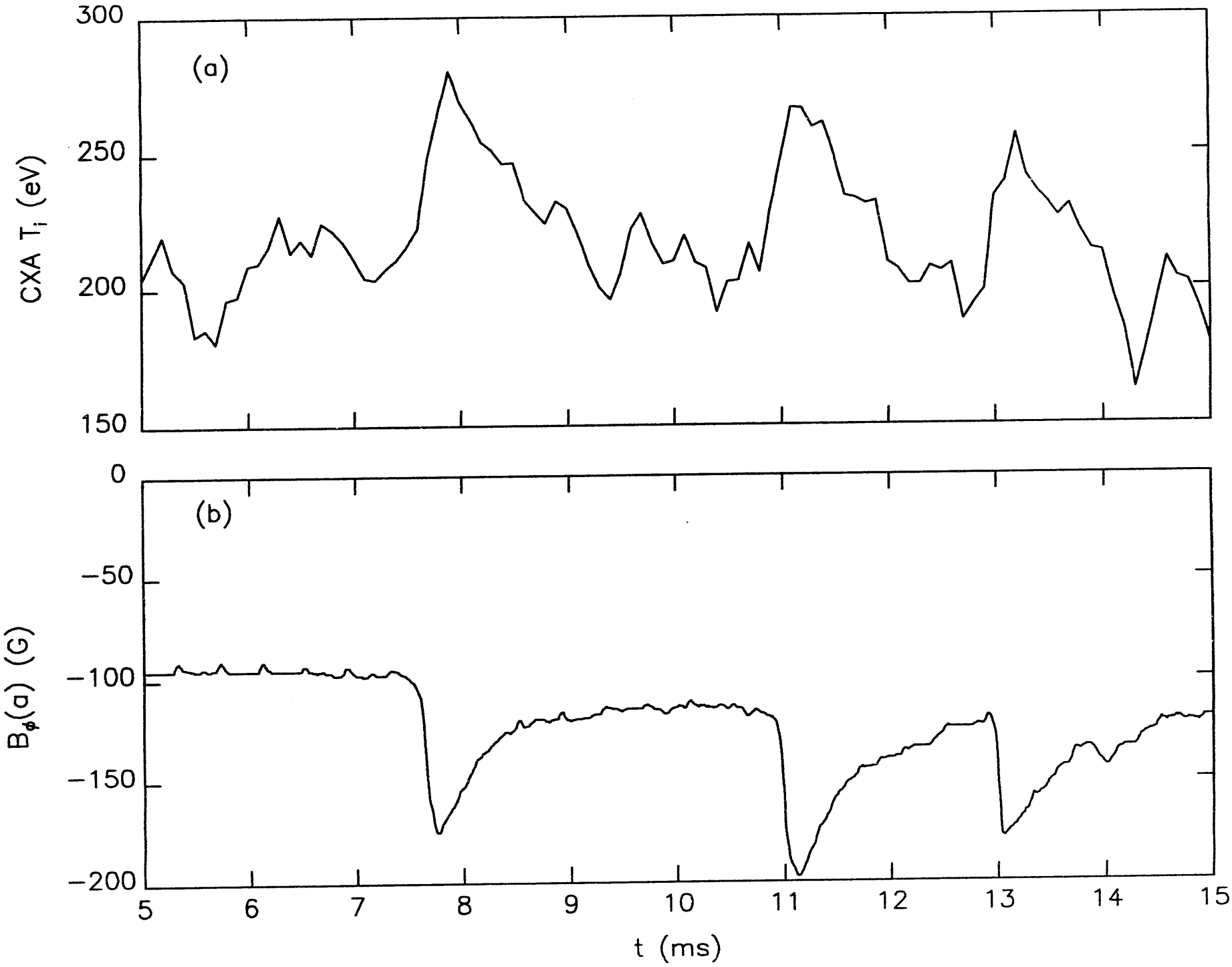
300
250
200
150
CXA T_i (eV)
(a)
0
−50
−100
−150
−200
$B_\phi(a)$ (G)
(b)
5
6
7
8
9
10
11
12
13
14
15
t (ms)

FIG. 4

EXTERNAL DISTRIBUTION IN ADDITION TO UC-20

S.N. Rasband, Brigham Young University
T. Dolan, EG&G Idaho, Inc.
J.B. Taylor, Institute for Fusion Studies, The University of Texas at Austin
F.W. Perkins, PPPL
O. Ishihara, Texas Technical University
M.A. Abdou, University of California, Los Angeles
R.W. Conn, University of California, Los Angeles
P.E. Vandenplas, Association Euratom-Etat Belge, Belgium
Centro Brasileiro de Pesquisas Firicas, Brazil
P. Sakanaka, Institute de Fisica-Unicamp, Brazil
Mme. Monique Bex, GANIL, France
J. Radet, CEN/CADARACHE, France
University of Ioannina, Greece
S. Ortolani, Istituto Gas Ionizzati, EURATON-ENEA-CNR Association, Italy
R. Andreani, Associazione EURATOM-ENEA sulla Fusione, Italy
Plasma section, Energy Fundamentals Division Electrotechnical Laboratory, Japan
Y. Kondoh, Gunma University, Kiryu, Gunma, Japan
H. Toyama, University of Tokyo, Japan
FOM-Instituut voor Plasmafysica "Rijnhuizen," The Netherlands
Z. Ning, Academia Sinica, Peoples Republic of China
P. Yang, Shandong University, Peoples Republic of China
S. Zhu, University of Science & Technology of China, People's Republic of China
I.N. Bogatu, Institute of Atomic Physics, Romania
M.J. Alport, University of Natal, Durban, South Africa
R. Storer, The Flinders University of South Australia, South Australia
B. Lehnert, Royal Institute of Technology, Sweden
Librarian, CRPP, Ecole Polytechnique Federale de Lausanne, Switzerland
B. Alper, Culham Laboratory, UK
A. Newton, Culham Laboratory, UK

2 for Chicago Operations Office
4 for individuals in Washington Offices

INTERNAL DISTRIBUTION IN ADDITION TO UC-20
80 for local group and file

END

DATE FILMED

7 / 9 / 93