DOE/MC/26291--3029-Vol.4

DE92 001127

Development of Standardized Air-Blown Coal Gasifier/ Gas Turbine Concepts for Future Electric Power Systems Volume IV
Appendix C: Design and Performance of Standardized Fixed Bed Air-Blown Gasifier IGCC Systems for Future Electric Power Generation

Final Report

February 1991

Work Performed Under Contract No.: DE-AC21-89MC26291

For
U.S. Department of Energy
Office of Fossil Energy
Morgantown Energy Technology Center
Morgantown, West Virginia

By
CRS Sirrine, Inc.
Power Division
Greenville, South Carolina

MASTER

DISTRIBUTION OF THIS DOCUMENT IS UNLIMITED

DISCLAIMER

This report was prepared as an account of work sponsored by an agency of the United States Government. Neither the United States Government nor any agency thereof, nor any of their employees makes any warranty, express or implied, or assumes any legal liability or responsibility for the accuracy, completeness or usefulness of any information, apparatus, product, or process disclosed, or represents that its use would not infringe privately owned rights. Reference herein to any specific commercial product, process, or service by trade name, trademark, manufacturer, or otherwise, does not necessarily constitute or imply its endorsement, recommendation, or favoring by the United States Government or any agency thereof. The views and opinions of authors expressed herein do not necessarily state or reflect those of the United States Government or any agency thereof.

This report has been reproduced directly from the best available copy.

Available to DOE and DOE contractors from the Office of Scientific and Technical Information, P.O. Box 62, Oak Ridge, TN 37831; prices available from (615)576-8401, FTS 626-8401.

Available to the public from the National Technical Information Service, U.S. Department of Commerce, 5285 Port Royal Rd., Springfield, VA 22161.

DOE/MC/26291-3029, Vol. 4
(DE92001127)

Development of Standardized Air-Blown Coal Gasifier/ Gas Turbine Concepts for Future Electric Power Systems
Volume IV
Appendix C: Design and Performance of Standarized Fixed Bed Air-Blown Gasifier IGCC Systems for Future Electric Power Generation

Final Report

Work Performed Under Contract No.: DE-AC21-89MC26291

For
U.S. Department of Energy
Office of Fossil Energy
Morgantown Energy Technology Center
P.O. Box 880
Morgantown, West Virginia 26507-0880

By
CRS Sirrine, Inc.
Power Division
P.O. Box 5456
Greenville, South Carolina 29606-5456

February 1991

Appendix C

This appendix is a compilation of work done to predict overall cycle performance from gasifier to generator terminals. A spreadsheet has been generated for each case to show flows within a cycle. The spreadsheet shows gaseous or solid composition of flow, temperature of flow, quantity of flow, and heat content of flow. Prediction of steam and gas turbine performance was obtained by the computer program GTPro. Outputs of all runs for each combined cycle reviewed has been added to this appendix. A process schematic displaying all flows predicted through GTPro and the spreadsheet is also added to this appendix. The numbered bubbles on the schematic correspond to columns on the top headings of the spreadsheet.

MASS/ENERGY BALANCES & SCHEMATICS

Table of Contents

				Page
1.	Cogeneration Schematics & Mass/Energy Balances			
	A.	50 MW Cycle		
		a.	General Electric LM 5000 PC	C-1
		b.	General Electric LM 6000	C-2
		c.	General Electric LM 5000 ST120	C-3
	B.	100 MW Cycle		
		a.	Westinghouse 501 D5	C-4
		b.	General Electric 7111 EA	C-5
		c.	Asea Brown Boveri GT 11N	C-6
	C.	200 MW Cycle		
		a.	Mitsubishi-Westinghouse 501 F	C-7
		b.	General Electric 7191 F	C-8
2.	Utility Schematics & Mass/Energy Balances			
	A.	50 MW Cycle		
		a.	General Electric LM 5000 PC	C-9
		b.	General Electric LM 6000	C-10
	B.	100 MW Cycle		
		a.	Westinghouse 501 D5	C-11
		b.	General Electric 7111 EA	C-12
		c.	Asea Brown Boveri GT 11N	C-13
	C.	200 MW Cycle		
		a.	Mitsubishi-Westinghouse 501 F	C-14
		b.	General Electric 7191 F	C-15
3.	Retrofit/Repower Schematic & Mass/Energy Balance			C-16

50 MW Cogen Cycle
General Electric
LM 5000 PC

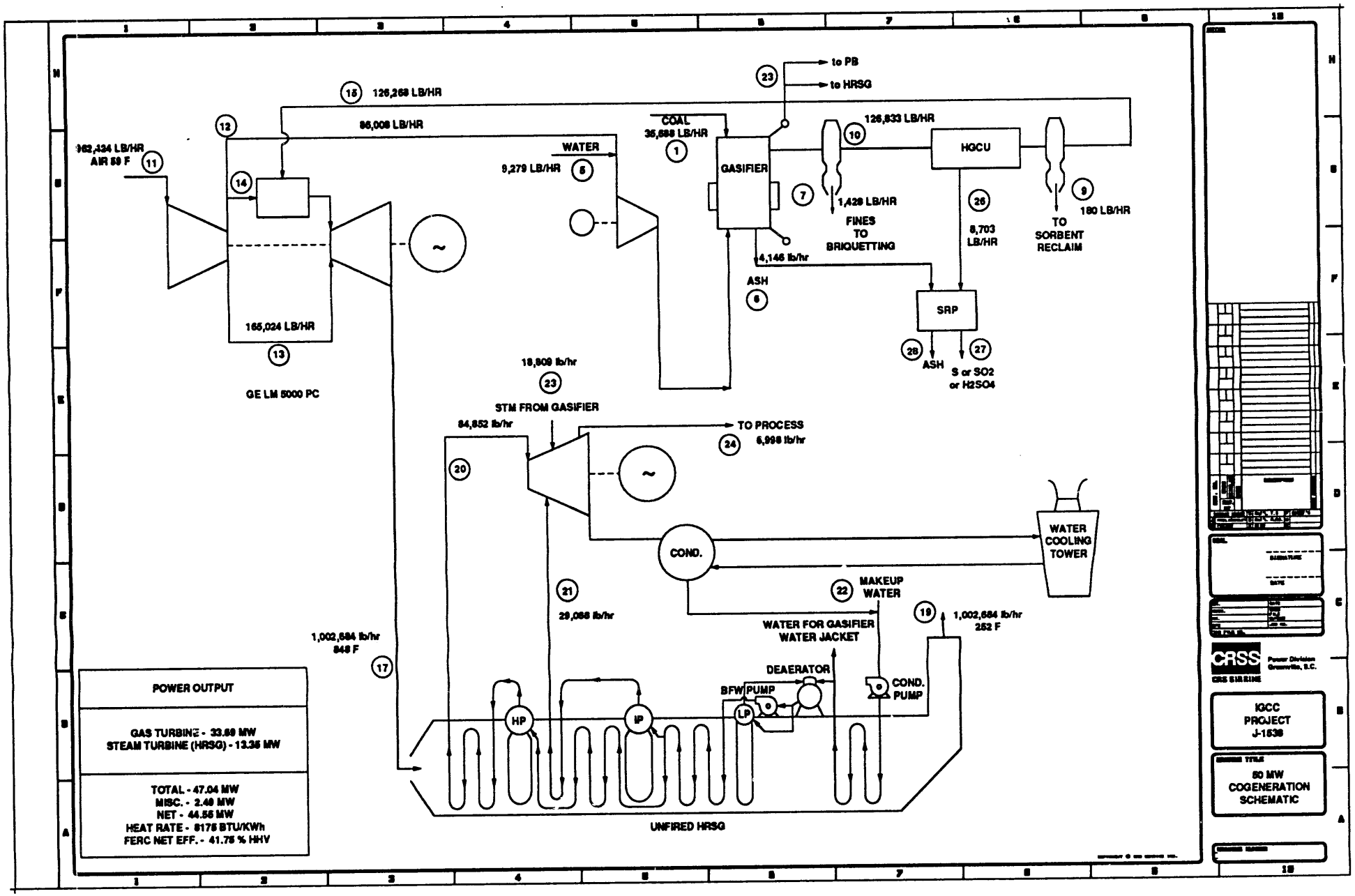
to PB
to HRSG
126,268 LB/HR
86,008 LB/HR
COAL
36,688 LB/HR
126,833 LB/HR
162,424 LB/HR
AIR 59 F
WATER
9,279 LB/HR
GASIFIER
HGCU
1,429 LB/HR
FINES
TO
BRIQUETTING
8,703
LB/HR
180 LB/HR
TO
SORBENT
RECLAIM
4,146 lb/hr
ASH
SRP
ASH
S or SO2
or H2SO4
165,024 LB/HR
GE LM 5000 PC
18,809 lb/hr
STM FROM GASIFIER
84,852 lb/hr
TO PROCESS
6,998 lb/hr
WATER
COOLING
TOWER
COND.
MAKEUP
WATER
29,088 lb/hr
1,002,684 lb/hr
252 F
WATER FOR GASIFIER
WATER JACKET
1,002,684 lb/hr
848 F
DEAERATOR
BFW PUMP
COND.
PUMP
HP
IP
LP
UNFIRED HRSG
POWER OUTPUT
GAS TURBINE - 33.69 MW
STEAM TURBINE (HRSG) - 13.35 MW
TOTAL - 47.04 MW
MISC. - 2.49 MW
NET - 44.55 MW
HEAT RATE - 8175 BTU/KWh
FERC NET EFF. - 41.75 % HHV
CRSS
IGCC
PROJECT
J-1538
50 MW
COGENERATION
SCHEMATIC

IGCC 53 - 50 MW COGEN CYCLE
GENERAL ELECTRIC LM 5000 PC

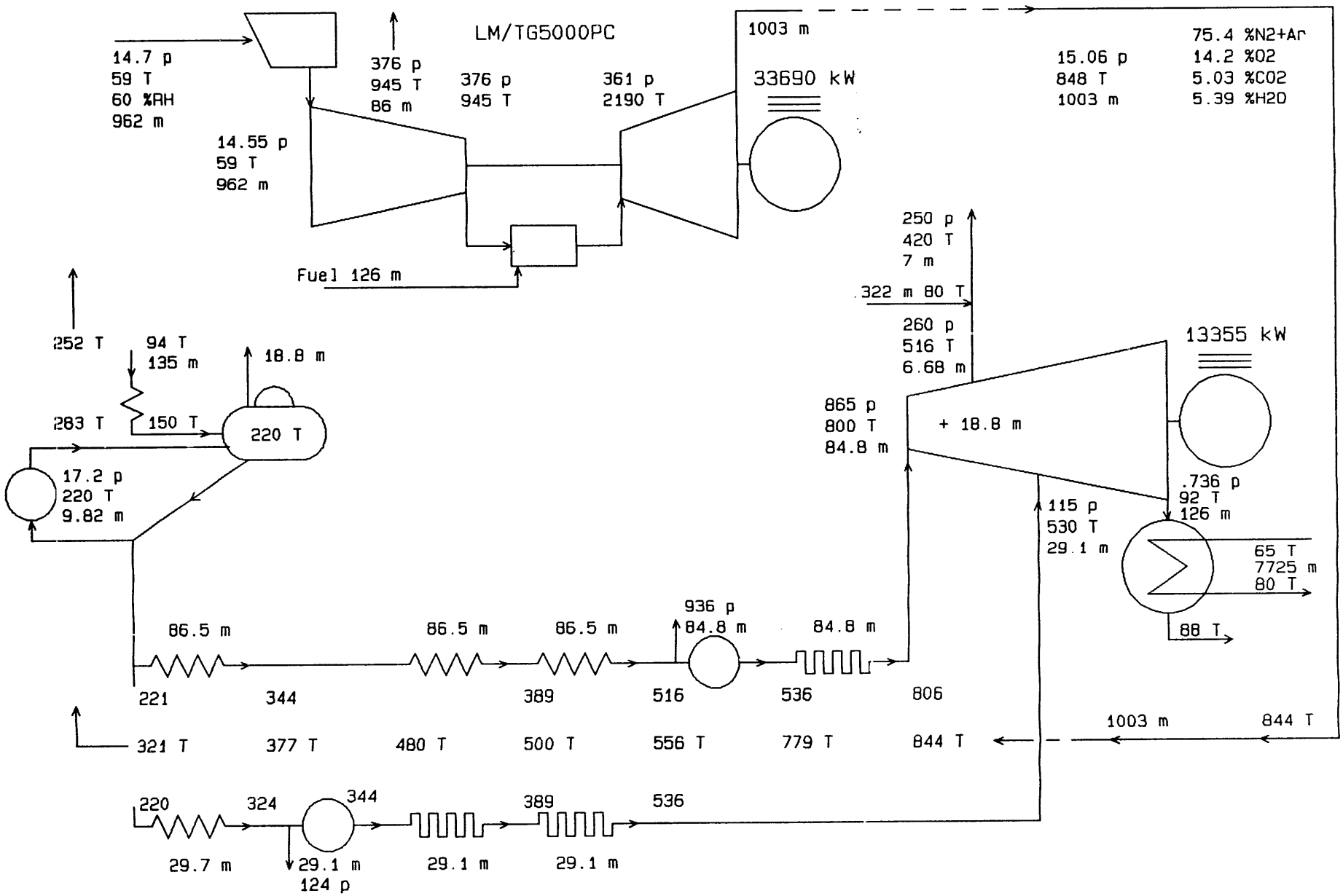

GTPRO 3.31 Michael Brown 10-15-1990 11:12:52
p psia, T F, m kpph

IGCC 53 - 50 MW COGEN CYCLE
GENERAL ELECTRIC LM 5000 PC

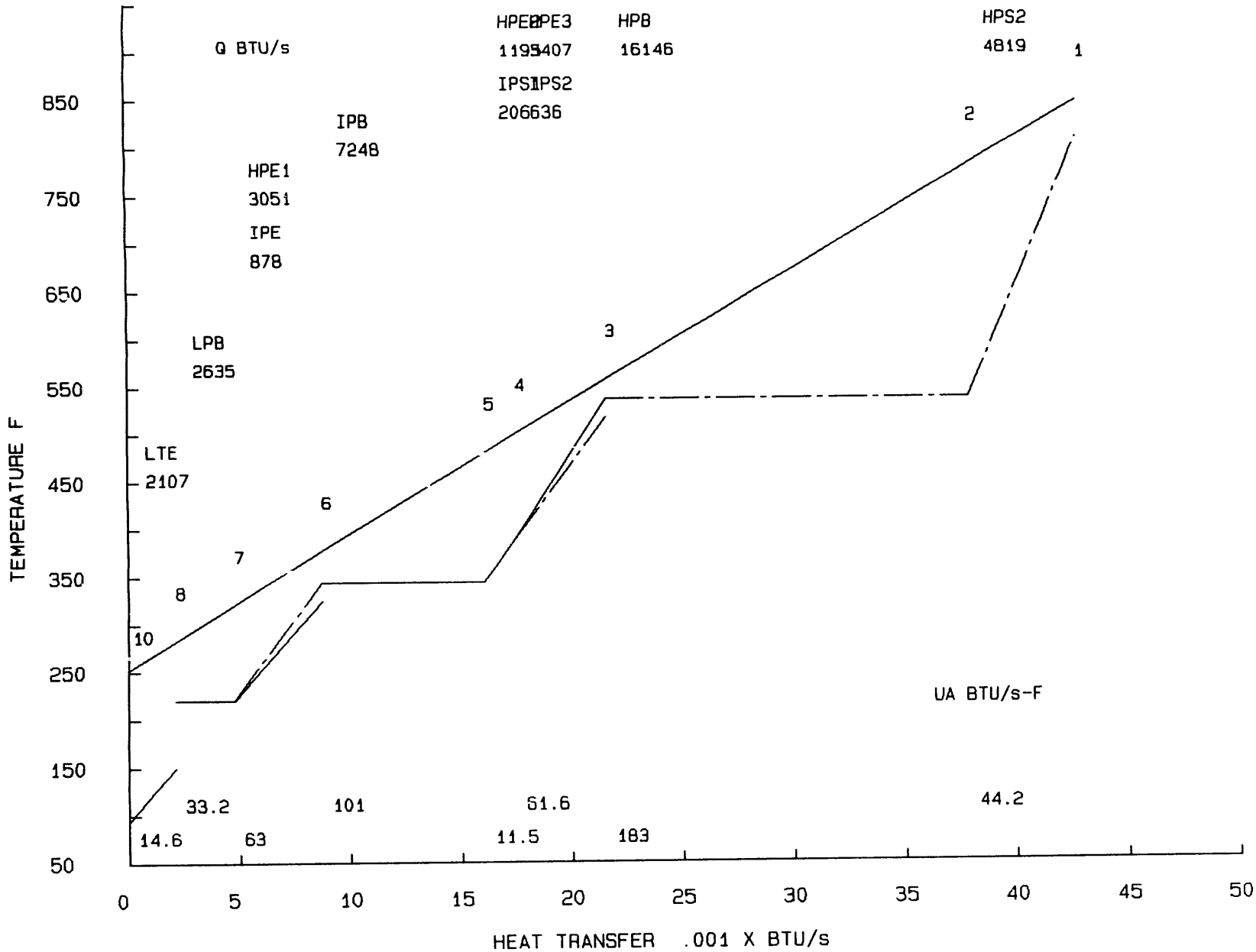

GTPRO 3.31 Michael Brown 10-15-1990 11:12:52

GTPRO 3.31 Michael Brown 10-15-1990 11:10:03
IGCC 53 - 50 MW COGEN CYCLE
GENERAL ELECTRIC LM 5000 PC

ESTIMATED G.T. SITE PERFORMANCE

Fuel=Fuel G.T. @ 100 % rating, XIGV= 0
Site ambient conditions: 14.7 psia, 59 F, 60 % RH
Inlet loss= 4 inch H2O, exhaust loss= 10 inch H2O
Evap. inlet cooler to 0 % RH.

G.T. DEVIATION FROM NOMINAL, CLEAN ENGINE

Compressor inlet airflow % reduction = 0
Compressor efficiency reduction % = 0
Turbine efficiency reduction % = 0
Maximum firing temperature excess over base load = 0 F
Combustor % pressure loss (0 means nominal value) = 0
Combustor inefficiency + heat loss % (0 means nominal value) = 0
Cooling air increase % (0 means nominal value) = 0
Process air bleed location (0 means none) = 1
Process air bleed % of inlet = 8.94

#	Model	PR	TIT F	TET F	Mair kpph	kWe	H.R.LHV BTU/kWh	Mex kpph	N2+Ar %	O2 %	CO2 %	H2O %
1	LM/TG5000PC	25.8	2190	848	962	33690	10133	1003	75.38	14.20	5.03	5.39

Fuel flow = 126 kpph
Fuel pressure reqd.= 507 psia, compressor power= 1720 kWe
G.T. auxillary power = 169 kWe.

ESTIMATED G.T. CYCLE

STREAM	TEMP. F	PRESS. psia	MASSFLOW kpph	M.W.	MOLE COMPOSITION % N2+Ar	O2	CO2	H2O
Ambient air in	59	14.70	962.44	28.75	78.22	20.74	0.03	1.01
Compr. inlet	59	14.55	962.44	28.75	78.22	20.74	0.03	1.01
Turbine coolant	misc.		165.02					
Process air bld	945	375.62	86.04	28.75	78.22	20.74	0.03	1.01
Compr. disch.	945	375.62	711.37	28.75	78.22	20.74	0.03	1.01
Turbine inlet	2190	360.59	837.64	28.87	74.82	12.91	6.01	6.26
Turbine exhaust	848	15.06	1002.67	28.85	75.38	14.20	5.03	5.39

Compressor= 61599 Turbine= 96324 Mech. loss= 347 kW
Turbine coolant= 17.1 % compr in
GT specific power @ gen term= 35 kW per kpph
GT efficiency @ gen term= 30.99 % HHV = 33.68 % LHV

GAS TURBINE/GENERATOR HEAT BALANCE

Energy in = 106601 BTU/s

Inlet air Sensible	Inlet air Latent	Water Inj.	Steam Inj.	Fuel HHV
1760	1780	0	0	103061

Energy out = 107151 BTU/s

Incompl comb & carcass rad	GT Mech. Losses	Gearbox Loss	Generator Loss	Exhaust Sensible	Exhaust Latent	Electric Output	Proc Air
522	221	0	658	58313	9853	31934	5651

Zero enthalpy: dry gases & liquid water @ 32 F (273.15 K)
Heat Balance Error = In - Out =-550 BTU/s =-.516 %

GTPRO 3.31 Michael Brown 10-15-1990 11:10:09 Steam cycle p.1
IGCC 53 - 50 MW COGEN CYCLE
GENERAL ELECTRIC LM 5000 PC
Type: 6 Subtype: 2 Induction

	p psia	T F	h BTU/lb	m kpph	UA BTU/s-F	Q BTU/s	A sq.ft
Cnd rtrn	0.74	87.57	55.58	126.053			
Stm rtrn	17.89	250.00	218.49	5.250			
Makeup	17.89	80.00	48.02	4.028	(Includes .322	kpph	for desup)
FW supl	17.89	93.72	61.70	135.009			
LTE				135.009	15	2107	6493
from LTE	17.20	150.00	117.88	135.009			
LPB				9.824	33	2635	13580
water bleed				18.810			
htd. FW	17.20	220.00	188.13	116.199			
HPFW	1011.93	220.80	191.91	86.532			
HPE1				86.532	51	3051	21953
6	973.01	343.99	318.85	0.000			
HPE2				86.532	10	1195	4105
7	954.30	388.76	368.55	0.000			
HPE3				86.532	49	3407	20488
8	935.58	516.40	510.29	0.000			
Blwdn	935.58	536.40	532.50	1.697			
HPB				84.836	183	16146	69688
9	935.58	536.40	1194.99	0.000			
HPS1				84.836	0	0	0
10	935.58	536.40	1194.99	0.000			
HPS2				84.836	44	4819	21414
11	899.60	806.00	1399.50	0.000			
Into HPT	865.00	800.00	1397.61	84.836			
bef addn	450.00	657.33	1338.96	84.836			
HPT addn	450.00	457.00	1205.71	18.810			
aft addn	450.00	613.81	1314.78	103.646			
HPT bld.	260.00	515.99	1274.15	6.678			
Desuperhtr				0.322			
HPT proc	250.00	420.00	1214.85	7.000			
HPT exit	115.00	376.10	1211.52	96.968			
IPFW	129.36	220.09	188.56	29.667			
IPE				29.667	12	878	5138
1	124.38	323.99	295.12	0.000			
Blwdn	124.38	343.99	315.62	0.582			
IPB				29.085	101	7248	39973
2	124.38	343.99	1191.86	0.000			
IPS1				29.085	2	206	860
3	124.38	388.76	1217.31	0.000			
IPS2				29.085	12	636	6101
4	119.60	536.40	1296.04	0.000			
Into LPT	115.00	408.88	1230.33	126.053			
LPT exit	0.74	91.57	974.81	126.053			

STEAM TURBINE

	No. of steps	Exit Quality	Efficiency(%)	Work (kW)
To HPT additn	2	1.174		
To HPT bleed	2	1.087		
To HPT exit	4	1.024	79.33	4472
To LPT exit	13	0.878	77.42	9439

Gross power = 13911 kW. Mech/Elect losses = 556 kW.
Generator output = 13355 kWe. ST auxiliaries = 93.5 kWe
Boiler feedpumps = 111 kWe

CONDENSER

	p psia	T F	h BTU/lb	m kpph
LPT exit	0.7365	91.57	974.81	126.05
Saturation	0.7365	91.57		
Condensate well	0.7365	87.57	55.58	126.05
Cooling water in		65.00		7724.80
Cooling water out		80.00		7724.80

Number of passes= 1 UA= 1787 BTU/s-F Surface area = 8739 sq.ft
Tubes: OD = 1 in Length= 38.6 ft number= 865
Cooling water: Velocity= 9 ft/s DP = 9.02 psia Pumps = 87.1 kWe.

STEAM CYCLE HEAT BALANCE

Energy in = 74932 BTU/s

GT Exhaust Sensible	GT Exhaust Latent	Duct Burner Fuel HHV	Makeup+Proc Return	Pump Work	External Steam
58313	9853	0	372	94	6300

Energy out = 74932 BTU/s

Heat Radiated	Blow down	Mech/Elec Losses	Stack Sens.	Stack Latent	Condnsr C.W.	Process Steam	GT Injec.	Proc. Water	Electric Output
798	302	527	15262	9853	32187	2362	0	983	12658

Zero enthalpy: dry gases & liquid water @ 32 F (273.15 K)
Heat Balance Error = In - Out =-.312 BTU/s = 0 %

HRSG GAS-SIDE PROFILE

Gas	Tg F	Tw F HP/IP	DT F HP/IP	Qg/UA F	DELTA P inch H2O	UA BTU/s-F	Qg BTU/s	Vg ft/s	Tube Rows	Lngth ft
1	843.8	806.0	37.8							
				110.0	1.2	44.2	4867.6	56.9	4.5	1.9
	778.7	536.4	242.3							
2	778.7	536.4	242.3							
				89.1	3.4	183.0	16307.2	50.5	14.8	6.1
	556.4	536.4	20.0							
3	556.4	516.4	40.0							
3	556.4	536.4	20.0							
				66.3	1.1	61.6	4083.4	44.2	5.6	2.3
	499.7	388.8	110.9							
	499.7	388.8	110.9							
4	499.7	388.8	110.9							
4	499.7	388.8	110.9							
				123.0	0.2	11.5	1414.3	42.5	1.1	0.4
	479.9	344.0	136.0							
	479.9	344.0	136.0							
5	479.9	344.0	136.0							
				72.7	1.5	100.7	7320.7	39.8	8.5	3.5
	377.0	344.0	33.0							
6	377.0	344.0	33.0							
6	377.0	324.0	53.0							
				63.0	0.9	63.0	3968.6	36.2	5.7	2.4
	320.7	220.8	99.9							
	320.7	220.1	100.6							
7	320.7	220.0	100.7							
				80.2	0.4	33.2	2660.9	34.1	2.9	1.2
	282.7	220.0	62.7							
8	282.7	150.0	132.7							
				145.3	0.2	14.6	2127.9	32.6	1.4	0.6
	252.3	93.7	158.6							

Duct burner fuel= 0 kpph
Gas mole composition: 75.4 %N2+Ar 14.2 %O2 5.03 %CO2 5.39 %H2O .002 %SO2
Flue gas dew point = 94 F M.W.= 28.8

HRSG TOTALS	Economisers	Evaporators	Superheaters	TOTAL
Q BTU/s	10638	26028	5661	42327
UA BTU/s-F	137	317	58	512
sq.ft	58178	123241	28375	209794

Prime surface= 12204 fin surface= 197589 sq.ft. Averaged fin eff.= .721
HRSG frontal area = 312 sq.ft. Gas mass flux= 6.37 kpph/sq.ft
HRSG length = 18.5 ft, 44.4 tube rows, 749 ft of tubes per row.
2 in dia. tubes with serrated fins, staggered arrangement.
Fin thickness/dia.= .03 , height/dia.= .4 , spacing/dia.= .07
Tube transverse pitch/dia.= 2.5 , row longitudinal pitch/dia.= 2.5

GE LM 5000 PC

Water cooling

air to coal ratio	2.41	air pressure	375	Cp air	0.248
water coal ratio	0.251	air temperature	945	Cp water	1.000
air to water ratio	9.60	water temperature	80	Cp steam	0.455

	lb	wt %	mols	mol %	partial pressure
air	9.60	90.57%	0.33	85.74%	321.53
water	1.00	9.43%	0.06	14.26%	53.47

sat temp 285

Temperature of combined stream entering boost compressor

400.15 F sat pressure 247 psia Rel. Hum. 21.65%

Temperature of stream exiting compressor (85% comp eff)

Tf = Ti + (Ti/n*{(Pf/Pi)^((k-1)/k)-1})

where
Ti - inlet temperature - 400.15 F - 860.15 R
n - efficiency - 85.00%
k - ratio of specific heat @ constant pressure to specific
to specific heat @ constant volume 1.384
Pf - final pressure 450 psia
Pi - initial pressure 375 psia

Tf = 452.66 F

	A	B	C	D	E	F	G	H	I	J	K	L	M	N	O
1	Standardized IGCC Gasifier Cogen Application													Reference Coal -	
2	Mass & Energy Balance					GE LM 5000 PC		Plant		Full Load				Predicted Gasifier Ou	
3	Stream No.			1		2		3		4				5	
4	Identification			AR Coal		Coal Fines		Sized Coal		CompAir@	2.41 A/C			Water @	0.26
5	From			Illinois #6		Sizer @	30%	Combined Streams		Aux Compr &/or Booster Compr				Cooling Water	H2O/
6	To			Sizer		Briquetting		Gasifier		Gasifier				Gasifier	Coal
7	Gas	Mol Wt		lb/hr	wt %	lb/hr	wt %	lb/hr	wt %	lb/hr	lb/mol	wt %	mol %	lb/hr	
8															
9	CO	28.010								0	0.00	0.00	0.00		
10	H2	2.016								0	0.00	0.00	0.00		
11	CO2	44.010								41	0.01	0.05	0.03		
12	H2O	18.015								547	0.18	0.64	1.02	9,279	
13	CH4	16.042								0	0.00	0.00	0.00		
14	C2H6	30.068								0	0.00	0.00	0.00		
15	H2S	34.076								0	0.00	0.00	0.00		
16	COS	60.070								0	0.00	0.00	0.00		
17	N2	28.013								64,528	21.65	75.03	77.28		
18	Ar	39.948								1,130	0.38	1.31	0.95		
19	HCl	36.461								0	0.00	0.00	0.00		
20	HCN	27.026								0	0.00	0.00	0.00		
21	NH3	17.030								0	0.00	0.00	0.00		
22	CS2	76.131								0	0.00	0.00	0.00		
23	SO2	64.059								0	0.00	0.00	0.00		
24	NO	30.006								0	0.00	0.00	0.00		
25	O2	31.999								19,763	6.63	22.98	20.72		
26	NaCl	58.497								0	0.00	0.00	0.00		
27	KCl	74.596								0	0.00	0.00	0.00		
28	Total Gas (lb/hr)									86,008	28.86	100.00	100.00	9,279	
29															
30	Volumetric Flow Rates (STP 14.7 psia, 59F)														
31	(acfm)									1,081					
32	(scfm)									18,819					
33															
34	Heat (BTU/lb)													1257	
35	Cp (BTU/lb F)									0.246					
36	HHV (BTU/lb)			10,776		10,776		10,776		0					
37	LHV (BTU/lb)			10,239		10,239		10,260		0					
38	Sensible Heat above														
39	59 F Btu/lb steam			0		0		0		97					
40	Latent Heat of														
41	Water Btu/lb steam									7					
42															
43	Chemical Heat			365.41		109.62		380.83		0.00					
44	(LHV) MBtu/hr														
45	Sensible Heat			0.00		0.00		0.00		8.34					
46	above 59 F MBtu/hr														
47	Latent Heat			19.16		5.75		19.16		0.57					
48	of Water MBtu/hr														
49	TotalHeat(MBtu/hr)			384.57		115.37		400.00		8.91				11.66	
50				Number of Gasifiers for 85% Plant Availability @90% Gasifier Availability,										450	psia
51															
52	C	12.011		21,452	60.11%	6,436	60.11%	22,560	60.78%		11				
53	H	1.008		1,488	4.17%	446	4.17%	1,488	4.01%		61			1,031	
54	O	16.000		2,702	7.57%	810	7.57%	2,702	7.28%		20,279			8,248	
55	N	14.007		421	1.18%	126	1.18%	421	1.13%		64,528			9,279	Total
56	S	32.060		1,028	2.88%	308	2.88%	1,028	2.77%		84,878	Total			
57	CL2	35.500		0	0.00%	0	0.00%	0	0.00%						
58	H2O	18.016		5,032	14.10%	1,510	14.10%	5,032	13.56%						
59	ZnFe2O4														
60	ZnS														
61	FeS														
62	Fe2O3														
63	ZnO														
64	ASH			3,569	10.00%	1,071	10.00%	3,889	10.48%						
65	Total Solids			35,688	100.01%	10,706	100.01%	37,119	100.00%						
66	Total Flow (mph)			35,688 *		10,706		37,119		86,008				9,279	
67															
68	Total Flow (pps)			9.91		2.97		10.31		23.89				2.58	
69	Pressure (psia)			14.7		14.7		14.7		450 *				450 *	
70	Temperature (F)			59		59		59		453 *				453 *	

O	P	Q	R	S	T	U	V	W	X	Y	Z	AA	AB	AC	AD
	Illinois #6								J-1538		DE-AC21-89MC26291				1
ler Output			10/16/90				Revision 7								2
	6	Uncomb	7		8		9				10	55 scf/lb of coal			3
0.26	Ash	Carbon	Fines (Char)		Tar		Dust(per RTI dia)		Miscellaneous		Hot Gas with tars				4
H2O/	Gasifier	2.69%	Gasifier @	4.00%	Gasifier @	6.00%	Final Cyclone		Gasifier Heat		Gasifier	N2 in coal			5
Coal	Ash Silo		Briquetting		HGCU		Reclaim		Losses		HGCU	to NH3 Conv		90.1%	6
	lb/hr	wt %	lb/hr	wt %	lb/hr	wt %	lb/hr	wt %			lb/hr	lb/mol	wt %	mol %	7
															8
											33,306	6.39	26.26	22.82	9
											1,498	0.29	1.18	14.26	10
											14,905	2.86	11.75	6.50	11
279											6,476	1.24	5.11	6.90	12
											2,721	0.52	2.15	3.26	13
											540	0.10	0.43	0.34	14
											936	0.18	0.74	0.53	15
											275	0.05	0.22	0.09	16
											64,569	12.39	50.91	44.24	17
											1,130	0.22	0.89	0.54	18
											0	0.00	0.00	0.00	19
											44	0.01	0.03	0.03	20
											433	0.08	0.34	0.49	21
											0	0.00	0.00	0.00	22
											0	0.00	0.00	0.00	23
											0	0.00	0.00	0.00	24
											0	0.00	0.00	0.00	25
											0	0.00	0.00	0.00	26
											0	0.00	0.00	0.00	27
279											126,833	24.34	100.00	100.00	28
															29
											126,833				30
											3,268				31
											32,911				32
															33
1257															34
	0.260		0.260		0.26		0.260				0.329				35
	0		10,936		17,329		0				2,588.8				36
	0		10,936		16,571		0				2,375.0				37
															38
	154		276		276		323				749				39
															40
	0		0		749		0				214				41
															42
	8.37		15.61		35.48		0.00				301.22				43
															44
	0.64		0.39		0.59		0.06		19.1 Water/steam jacket		44.22				45
															46
	0.00		0.00		1.60		0.00		4.5 Traversing Stirrer		27.13	Gas HHV=	189	Btu/scf	47
												Estimated=	598	Btu/lb	48
11.66	9.00		16.01		37.68		0.06		23.6 Total		372.58	Calculated=	605	Btu/lb	49
pin & 17 tph (typical) Coal each:				1.5		Unit Output (MWn)			44.6 MWn			BulkGas=	3.91%	H2O	50
												Calc Comb Temp (F)		2220	51
	577	13.92	1,108	77.60%	1,884	88.00%					20,886	20,886	0.00%		52
1,031			0	0.00%	171	8.00%					3,139	3,139	0.00%		53
1,248			0	0.00%	43	2.00%					35,701	35,701	0.00%		54
1,279 Total			0	0.00%	21	1.00%					64,949	64,949	0.00%		55
	0	0.00	0	0.00%	21	1.00%					1,028	1,028	-0.02%		56
			0	0.00%						Sub-Totals	125,703	125,703	0.00%		57
			0	0.00%							Sum of Streams	Sum of Gas Constituents	Mass Unbalance		58
							162	90							59
							4	2			balance check				60
							11	6			FERC Cycle Efficiency(g)= 43.96%				61
							0	0			FERC Cycle Efficiency(n)= 41.75%				62
							4	2							63
	3,569	86.08	320	22.40%			0	0							64
	4,146	100	1,428	100.00%	2,141	100.00%	180	100							65
1,279	4,146		1,428		2,141		180				126,833				66
															67
2.58	1.15		0.40		0.59		0.05				35.23				68
450 *	14.7		450 *		450 *		451				451				69
453 *	650		1120		1120		1300				1120				70

	AE	AF	AG	AH	AI	AJ	AK	AL	AM	AN	AO	AP	AQ	AR
1	Standardized IGCC Gasifier Cogen Application											Reference Coal - Il		
2	Mass & Energy Balance				GE LM 5000 PC							Predicted Gasifier Ou		
3	Stream No.		11				12				13	14		
4	Identification		Air				Bleed Air				Bleed Air	Compressor Discharge		
5	From		Atmosphere				Compressor				for	Compressor		
6	To		Gas Turbine Compressor				Booster Compressor Cooler				Coolant	Combustor		
7	Gas	Mol Wt	lb/hr	lb/mol	wt %	mol %	lb/hr	lb/mol	wt %	mol %	lb/hr	lb/hr	lb/mol	wt %
8														
9	CO	28.010	0	0.00	0.00	0.00	0	0.00	0.00	0.00	0	0	0.00	0.00
10	H2	2.016	0	0.00	0.00	0.00	0	0.00	0.00	0.00	0	0	0.00	0.00
11	CO2	44.010	456	0.01	0.05	0.03	41	0.01	0.05	0.03	78	337	0.01	0.05
12	H2O	18.015	6,119	0.18	0.64	1.02	547	0.18	0.64	1.02	1,049	4,523	0.18	0.64
13	CH4	16.042	0	0.00	0.00	0.00	0	0.00	0.00	0.00	0	0	0.00	0.00
14	C2H6	30.068	0	0.00	0.00	0.00	0	0.00	0.00	0.00	0	0	0.00	0.00
15	H2S	34.076	0	0.00	0.00	0.00	0	0.00	0.00	0.00	0	0	0.00	0.00
16	COS	60.070	0	0.00	0.00	0.00	0	0.00	0.00	0.00	0	0	0.00	0.00
17	N2	28.013	722,063	21.65	75.03	77.28	64,528	21.65	75.03	77.28	123,810	533,725	21.65	75.03
18	Ar	39.948	12,641	0.38	1.31	0.95	1,130	0.38	1.31	0.95	2,168	9,344	0.38	1.31
19	HCl	36.461	0	0.00	0.00	0.00	0	0.00	0.00	0.00	0	0	0.00	0.00
20	HCN	27.026	0	0.00	0.00	0.00	0	0.00	0.00	0.00	0	0	0.00	0.00
21	NH3	17.030	0	0.00	0.00	0.00	0	0.00	0.00	0.00	0	0	0.00	0.00
22	CS2	76.131	0	0.00	0.00	0.00	0	0.00	0.00	0.00	0	0	0.00	0.00
23	SO2	64.059	0	0.00	0.00	0.00	0	0.00	0.00	0.00	0	0	0.00	0.00
24	NO	30.006	0	0.00	0.00	0.00	0	0.00	0.00	0.00	0	0	0.00	0.00
25	O2	31.999	221,145	6.63	22.98	20.72	19,763	6.63	22.98	20.72	37,919	163,463	6.63	22.98
26	NaCl	58.497	0	0.00	0.00	0.00	0	0.00	0.00	0.00	0	0	0.00	0.00
27	KCl	74.596	0	0.00	0.00	0.00	0	0.00	0.00	0.00	0	0	0.00	0.00
28	Total Gas (lb/hr)		962,424	28.86	100.00	100.00	86,008	28.86	100.00	100.00	165,024	711,392	28.86	100.00
29														
30	Volumetric Flow Rates (STP 14.7 psia, 59F)													
31	(acfm)		210,583				1,994					16,491		
32	(scfm)		210,583				18,819				36,367	155,656		
33														
34	hgAdiabHeat(BTU/lb)													
35	Cp (BTU/lb F)		0.240				0.262					0.262		
36	HHV (BTU/lb)		0.0				0.0					0.0		
37	LHV (BTU/lb)		0.0				0.0					0.0		
38	Sensible Heat													
39	above 59 F Btu/lb		0				232					232		
40	Latent Heat													
41	of Water Btu/lb		7				7					7		
42														
43	Chemical Heat		0.00				0.00					0.00		
44	(LHV) MBtu/hr													
45	Sensible Heat		0.00				19.98					165.24		
46	above 59 F MBtu/hr													
47	Latent Heat		6.36				0.57					4.70		
48	of Water MBtu/hr													
49	TotalHeat(MBtu/hr)		6.36				20.55					169.95		
50												Parasitic Load		2.49 M
51														
52	C	12.011		124				11			21		92	92
53	H	1.008		680				61			117		503	503
54	O	16.000		226,915				20,279			38,909		167,728	167,728
55	N	14.007		722,063				64,528			123,810		533,725	533,725
56	S	32.060		0				0			0		0	0
57	CL2	35.500		949,783	sub-totals			84,878	sub-totals		162,856	sub-totals	702,048	702,048
58	H2O	18.016											balance check	
59	ZnFe2O4													
60	ZnS													
61	FeS													
62	Fe2O3													
63	ZnO													
64	ASH													
65	Total Solids													
66	Total Flow (pph)		962,424				86,008				165,024	711,392		
67														
68	Total Flow (pps)		267.34 *				23.89			*	45.84	197.61		
69	Pressure (psia)		14.7 *				376 *					376		
70	Temperature (F)		59 *				945 *					945		

AR	AS	AT	AU	AV	AW	AX	AY	AZ	BA	BB	BC	BD	BE	BF	BG
l -	Illinois #6							J-1538			DE-AC21-89MC26291				1
ifier Output				Revision 7										10/16/90	2
		15				16					17				3
r Discharge		Fuel			%H2S	Inlet Gas		Thrml NO (ppmvd)		25	Exhaust Gas				4
r		HGCU			Removed	GT Combustor		*Rich/Lean Red. F		85%	Gas Turbine				5
		GT Combustor			99.0%	GT Expander									6
wt %	mol %	lb/hr	mol/hr	wt %	mol %	lb/hr	lb/mol	mols	wt %	mol %	lb/hr	mols/hr	wt %	mol %	7
															8
0.00	0.00	33,306	1,189	26.38	22.84	0	0.00	0.00	0.00	0.00	0	0.00	0.00	0.00	9
0.00	0.00	1,480	734	1.17	14.10	0	0.00	0.00	0.00	0.00	0	0.00	0.00	0.00	10
0.05	0.03	14,905	339	11.80	6.51	76,719	2.65	0.0021	9.16	6.03	76,797	1744.99	7.66	5.04	11
0.64	1.02	7,129	396	5.65	7.60	32,772	1.13	0.00	3.91	6.29	33,821	1877.37	3.37	5.42	12
0.00	0.00	2,721	170	2.16	3.26	0	0.00	0.00	0.00	0.00	0	0.00	0.00	0.00	13
0.00	0.00	540	18	0.43	0.34	0	0.00	0.00	0.00	0.00	0	0.00	0.00	0.00	14
0.00	0.00	9	0	0.01	0.01	0	0.00	0.00	0.00	0.00	0	0.00	0.00	0.00	15
0.00	0.00	3	0	0.00	0.00	0	0.00	0.00	0.00	0.00	0	0.00	0.00	0.00	16
75.03	77.28	64,569	2,305	51.14	44.28	598,596	20.70	0.0255	71.46	73.90	722,406	25788.24	72.05	74.46	17
1.31	0.95	1,130	28	0.89	0.54	10,474	0.36	0.00	1.25	0.91	12,641	316.44	1.26	0.91	18
0.00	0.00	0	0	0.00	0.00	0	0.00	0.00	0.00	0.00	0	0.00	0.00	0.00	19
0.00	0.00	44	2	0.03	0.03	0	0.00	0.00	0.00	0.00	0	0.00	0.00	0.00	20
0.00	0.00	433	25	0.34	0.49	0	0.00	0.00	0.00	0.00	0	0.00	0.00	0.00	21
0.00	0.00	0	0	0.00	0.00	0	0.00	0.00	0.00	0.00	0	0.00	0.00	0.00	22
0.00	0.00	0	0	0.00	0.00	21	0.0007	0.0000	0.0025	0.0011	21	0.32	0.00	0.00	23
0.00	0.00	0	0	0.00	0.00	168	0.0058	0.0000	0.0200	0.0193	168	5.59	0.02	0.02	24
22.98	20.72	0	0	0.00	0.00	118,913	4.11	0.0044	14.20	12.85	156,832	4901.15	15.64	14.15	25
0.00	0.00	0	0	0.00	0.00	0	0.00	0.00	0.00	0.00	0	0.00	0.00	0.00	26
0.00	0.00	0	0	0.00	0.00	0	0.00	0.00	0.00	0.00	0	0.00	0.00	0.00	27
100.00	100.00	126,268	5,206	100.00	100.00	837,660	28.97	0.0345	100.00	100.00	1,002,684	34634.09	100.00	100.00	28
						837,661 bal ck					1,002,685	bal ck			29
															30
		3,388				37,957					535,433				31
		37,867				182,560					218,669				32
															33
															34
		0.334				0.283					0.267				35
		2,548.9				0.0					0.0				36
		2,330.0				0.0					0				37
															38
		375				603					211				39
															40
		219				41					35				41
															42
		294.21				0.00					0.00				43
															44
		47.29				505.17					211.58				45
															46
		27.63				34.08					35.17				47
															48
		369.13				539.25	539.07 bal chk				246.76				49
2.49 MWg			Combustion Turbine Output			33.69 MWg					1.04 Turbine Compressor Surge Margin				50
															51
92	0.00%		20,831			20,923	20,923	0.00%			20,945	20,945	0.00%		52
503	0.00%		3,139			3,641	3,641	0.00%			3,758	3,758	0.00%		53
167,728	0.00%		36,209			203,937	203,938	0.00%			242,847	242,847	0.00%		54
533,725	0.00%		64,949			598,674	598,674	0.00%			722,484	722,484	0.00%		55
0	0.00%		10			10	10	0.10%			10	10	0.00%		56
702,048	0.00%		125,138	sub-total		827,186	827,187	0.00%	sub-total		990,044	990,044	0.00%	sub-total	57
balance check								balance check					balance check		58
															59
															60
															61
															62
															63
															64
															65
		126,268				837,660					1,002,684				66
															67
		35.07				232.68					278.52				68
		450.62				361 *					15.13				69
		1180				2,190 *					848 *				70

	BH	BI	BJ	BK	BL	BM	BN	BO	BP	BQ	BR	BS
1	Standardized IGCC Gasifier Cogen Application						Reference Coal -			Illinois #6		
2	Mass & Energy Balance			GE LM 5000 PC			Predicted Gasifier Output					
3	Stream No.		18				19	Thrml NO (ppmvd)		25	20	21
4	Identification		Fuel for Supplementary Firing				Flue Gas		SCR Red F	80%	Superheated Steam	Low Pressure St
5	From		Gasifier				HRSG		R/L Red F	85%	HRSG	HRSG
6	To		HRSG				Stack		NOx Reburn F	0%	Steam Turbine	Steam Turbin
7	Gas	Mol Wt	lb/hr	lb/mol	wt %	mol%	lb/hr	mols/hr	wt %	mol%	lb/hr	lb/hr
8												
9	CO	28.010	0	6.39	26.26	22.82	0	0.00	0.00	0.00		
10	H2	2.016	0	0.29	1.18	14.26	0	0.00	0.00	0.00		
11	CO2	44.010	0	2.86	11.75	6.50	76,797	1744.99	7.66	5.04		
12	H2O	18.015	0	1.24	5.11	6.90	33,821	1877.37	3.37	5.42		
13	CH4	16.042	0	0.52	2.15	3.26	0	0.00	0.00	0.00		
14	C2H6	30.068	0	0.10	0.43	0.34	0	0.00	0.00	0.00		
15	H2S	34.076	0	0.18	0.74	0.53	0	0.00	0.00	0.00		
16	COS	60.070	0	0.05	0.22	0.09	0	0.00	0.00	0.00		
17	N2	28.013	0	12.39	50.91	44.24	722,406	25788.24	72.06	74.47		
18	Ar	39.948	0	0.22	0.89	0.54	12,641	316.44	1.26	0.91		
19	HCl	36.461	0	0.00	0.00	0.00	0	0.00	0.00	0.00		
20	HCN	27.026	0	0.01	0.03	0.03	0	0.00	0.00	0.00		
21	NH3	17.030	0	0.08	0.34	0.49	0	0.00	0.00	0.00		
22	CS2	76.131	0	0.00	0.00	0.00	0	0.00	0.00	0.00	Stack Emissions (lb/MBtu)	
23	SO2	64.059	0	0.00	0.00	0.00	21	0.32	0.00	0.00	0.053	
24	NO	30.006	0	0.00	0.00	0.00	34	1.12	0.00	0.00	0.09	
25	O2	31.999	0	0.00	0.00	0.00	156,832	4901.15	15.64	14.15		
26	NaCl	58.497	0	0.00	0.00	0.00	0	0.00	0.00	0.00		
27	KCl	74.596	0	0.00	0.00	0.00	0	0.00	0.00	0.00		
28	Total Gas (lb/hr)		0	24.34	100.00	100.00	1,002,530	34629.62	100.00	100.00		
29							1,002,551	bal chk				
30	Volumetric Flow Rates (STP 14.7 psia, 59F)											
31	(acfm)		0				299,946					
32	(scfm)		0				218,641					
33												
34	Heat (BTU/lb)										1398	
35	Cp (BTU/lb F)		0.334				0.247					
36	HHV (BTU/lb)		2548.9				0.0					
37	LHV (BTU/lb)		2330.0				0					
38	Sensible Heat above											
39	59 F Btu/lb steam		0				48					
40	Latent Heat of											
41	Water Btu/lb steam		0				35					
42												
43	Chemical Heat		0.00				0.00					
44	(LHV) MBtu/hr											
45	Sensible Heat		0.00				47.77					
46	above 59 F MBtu/hr											
47	Latent Heat		0.00				35.17					
48	of Water MBtu/hr											
49	TotalHeat(MBtu/hr)		0.00				82.94				118.62	
50											HRSG Turbine C	
51												
52	C	12.011		0			20,945	20,945	0.00%			
53	H	1.008		0			3,758	3,758	0.00%			
54	O	16.000		0			242,775	242,775	0.00%			
55	N	14.007		0			722,421	722,421	0.00%			
56	S	32.060		0			10	10	0.00%			
57	CL2	35.500		0	sub-total		989,910	989,910	0.00%	sub-total		
58	H2O	18.016										
59	ZnFe2O4											
60	ZnS											
61	FeS											
62	Fe2O3											
63	ZnO											
64	ASH											
65	Total Solids											
66	Total Flow (pph)		0				1,002,684				84,852	
67												
68	Total Flow (pps)		0 *				278.52				23.57	
69	Pressure (psia)		450.62				14.7				865	
70	Temperature (F)		1180				252 *				800	

BS	BT	BU	BV	BW
	J-1538	DE-AC21-89MC26291		1
	Revision 7		10/16/90	2
21	22	23	24	3
Process Steam	Make Up Water	Sat. Steam	Process Stm	4
HRSG	WaterTreatment	Gasifier	Stm Turbine	5
Stm Turbine	HRSG	Steam Turbine	Process Facility	6
lb/hr	lb/hr	lb/hr	lb/hr	7
				8
				9
				10
				11
				12
				13
				14
				15
				16
				17
				18
				19
				20
				21
				22
				23
				24
				25
				26
				27
				28
				29
				30
				31
				32
				33
1237.6	48	1204	1214.5	34
				35
				36
				37
				38
				39
				40
				41
				42
				43
				44
				45
				46
				47
				48
36.00	0.64	19.11	8.50	49
Turbine Output	13.4	MWg		50
				51
				52
				53
				54
				55
				56
				57
				58
				59
				60
				61
				62
				63
				64
				65
29,088	13,307	18,809	6,998	66
				67
8.08	3.70	5.22	1.94	68
115	15	490	250	69
432	80	457	420	70

	BX	BY	BZ	CA	CB	CC	CD	CE	CF	CG	CH	CI
1	Standardized IGCC Gasifier Cogen Application								Reference Coal -			Illinois #6
2	Mass & Energy Balance				GE LM 5000 PC				Predicted Gasifier Output			
3	Stream No.		25		26					27		27a
4	Identification		Regen Recycle Loop		Conc SO2 Bleed					Elemental Sulfur		Elemental Sulfur
5	From		Recycle Blower		Regen Loop					Resox Process		DSRP
6	To		Regenerator		SRP					Marketable Byproduct		Marketable Byprodu
7	Gas	Mol Wt	lb/hr	wt%	lb/hr	lbs/mol	mols/hr	wt%	mol%	lb/hr	wt%	lb/hr
8												
9	CO	28.010			0	0.00	0.00	0.00	0.00			
10	H2	2.016			0	0.00	0.00	0.00	0.00			
11	CO2	44.010	52	0.05	4	0.02	0.10	0.05	0.04			
12	H2O	18.015	646	0.62	54	0.20	2.99	0.62	1.11			
13	CH4	16.042			0	0.00	0.00	0.00	0.00			
14	C2H6	30.068			0	0.00	0.00	0.00	0.00			
15	H2S	34.076			0	0.00	0.00	0.00	0.00			
16	COS	60.070			0	0.00	0.00	0.00	0.00			
17	N2	28.013	78,190	74.87	6.516	24.10	232.60	74.87	86.02			
18	Ar	39.948	0	0.00	0	0.00	0.00	0.00	0.00			
19	HCl	36.461			0	0.00	0.00	0.00	0.00			
20	HCN	27.026			0	0.00	0.00	0.00	0.00			
21	NH3	17.030			0	0.00	0.00	0.00	0.00			
22	CS2	76.131			0	0.00	0.00	0.00	0.00			
23	SO2	64.059	24,411	23.37	2,034	7.32	31.76	23.37	11.74			
24	NO	30.006			0	0.00	0.00	0.00	0.00			
25	O2	31.999	1,134	1.09	95	0.35	2.95	1.09	1.09			
26	NaCl	58.497			0	0.00	0.00	0.00	0.00			
27	KCl	74.596			0	0.00	0.00	0.00	0.00			
28	Total Gas (lb/hr)		104,433	100.00	8,703	32.19	270	100.00	100.00			
29												
30	Volumetric Flow Rates		(STP 14.7 psia, 59 F)									
31	(acfm)		3,671		289							
32	(scfm)		20,486		1,707							
33												
34	Heat (BTU/lb)											
35	Cp (BTU/lb F)		0.240		0.240					0.000		0
36	HHV (BTU/lb)											
37	LHV (BTU/lb)											
38	Sensible Heat above											
39	59 F Btu/lb steam											
40	Latent Heat of											
41	Water Btu/lb steam											
42												
43	Chemical Heat									4.05		
44	(LHV) MBtu/hr											
45	Sensible Heat		33.61		2.59					0.00		
46	above 59 F MBtu/hr											
47	Latent Heat		0.67		0.06					0.00		
48	of Water MBtu/hr											
49	TotalHeat(MBtu/hr)		34.28		2.65					4.05		
50												
51												
52	C	12.011										
53	H	1.008										
54	O	16.000										
55	N	14.007										
56	S	32.060								1,017		1
57	CL2	35.500										
58	H2O	18.016										
59	ZnFe2O4											
60	ZnS											
61	FeS											
62	Fe2O3											
63	ZnO											
64	ASH				0.00			0				
65	Total Solids											
66	Total Flow (pph)		104,[illegible]33		8,703					1,017		1
67												
68	Total Flow (pps)		29.01		2.42					0.28		
69	Pressure (psia)		294		294					15		
70	Temperature (F)		1400		1300					284		

CI	CJ	CK	CL	CM
6	J-1538	DE-AC21-89MC26291		1
	Revision 7		10/16/90	2
7a	27b	28		3
al Sulfur	Sulfur Dioxide	Ash		4
RP	SO2 Recovery Unit	SO2 Reductor		5
Byproduct	Marketable Byproduct	Disposal		6
hr	lb/hr	lb/hr	wt%	7
				8
				9
				10
				11
				12
				13
				14
				15
				16
				17
				18
				19
				20
				21
				22
				23
				24
				25
				26
				27
				28
				29
				30
				31
				32
				33
				34
0.000	0.000			35
				36
				37
				38
		154	0	39
				40
				41
				42
4.05	4.05	1.46	0	43
				44
0.00	0.00	0.00	0	45
				46
0.00	0.00	0.00	0	47
				48
4.05	4.05	1.46	0.4	49
				50
				51
		101	3	52
				53
				54
				55
1,017	1,017			56
				57
				58
				59
				60
				61
				62
				63
		3,569	97	64
		3,670	100	65
1,017	2,034	3,670	100	66
				67
0.28	0.57	1.02		68
15	100	15		69
150	59	284		70

50 MW Cogen Cycle
General Electric
LM 6000

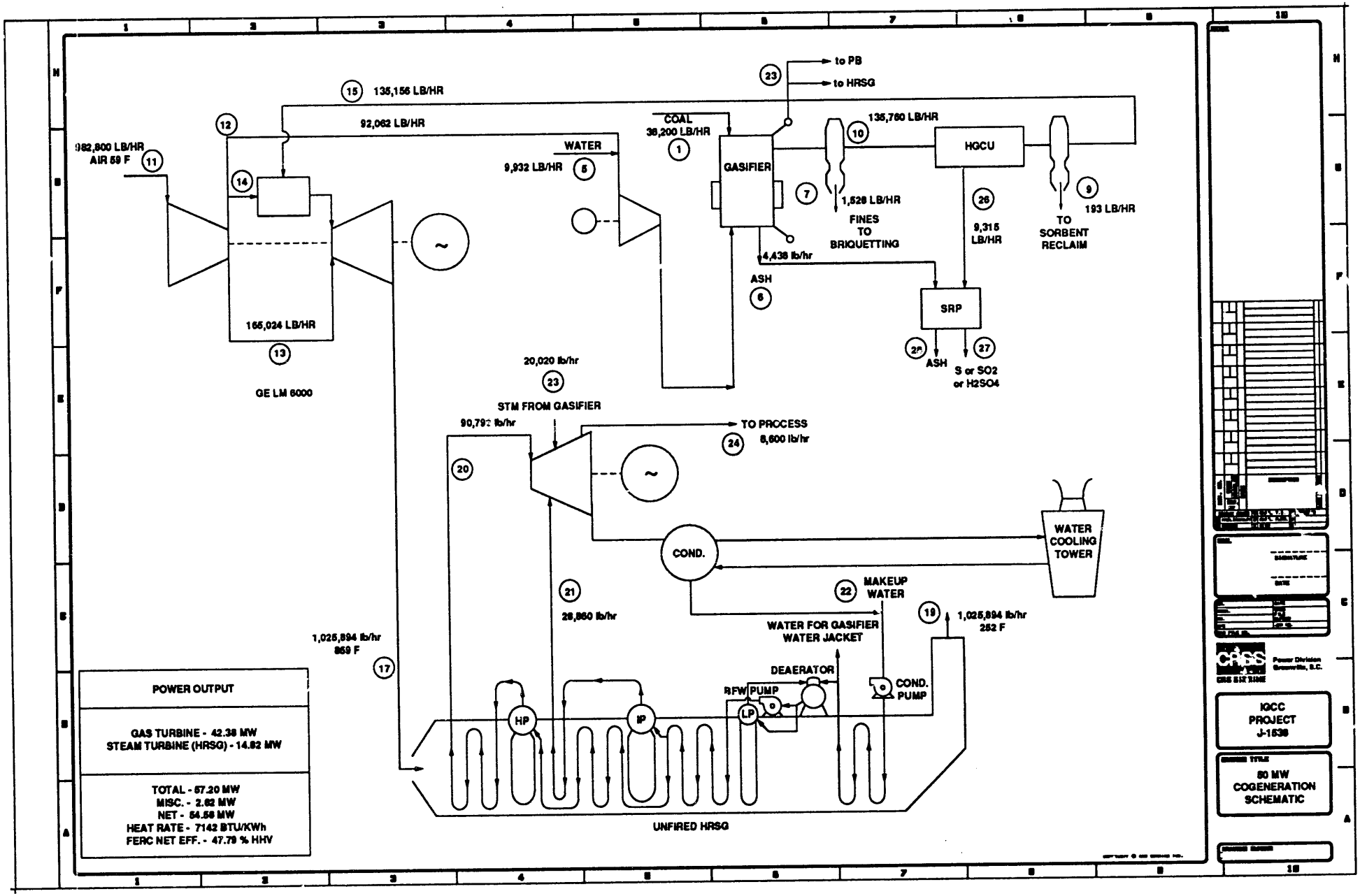
to PB
to HRSG
23
15 135,156 LB/HR
12
92,062 LB/HR
COAL
36,200 LB/HR
1
135,760 LB/HR
10
HGCU
982,800 LB/HR
AIR 59 F
11
14
WATER
9,932 LB/HR
5
GASIFIER
7
1,528 LB/HR
FINES
TO
BRIQUETTING
26
9,315
LB/HR
9
193 LB/HR
TO
SORBENT
RECLAIM
4,438 lb/hr
ASH
6
SRP
165,024 LB/HR
13
GE LM 6000
20,020 lb/hr
23
STM FROM GASIFIER
90,793 lb/hr
TO PROCESS
24
8,600 lb/hr
20
COND.
WATER
COOLING
TOWER
21
28,860 lb/hr
22
MAKEUP
WATER
WATER FOR GASIFIER
WATER JACKET
19
1,025,894 lb/hr
252 F
1,025,894 lb/hr
869 F
17
DEAERATOR
BFW PUMP
COND.
PUMP
HP
IP
LP
UNFIRED HRSG
POWER OUTPUT
GAS TURBINE - 42.38 MW
STEAM TURBINE (HRSG) - 14.82 MW
TOTAL - 57.20 MW
MISC. - 2.62 MW
NET - 54.58 MW
HEAT RATE - 7142 BTU/KWh
FERC NET EFF. - 47.79 % HHV
IGCC
PROJECT
J-1538
80 MW
COGENERATION
SCHEMATIC

IGCC 55 - 50 MW COGEN CYCLE
GENERAL ELECTRIC LM 6000

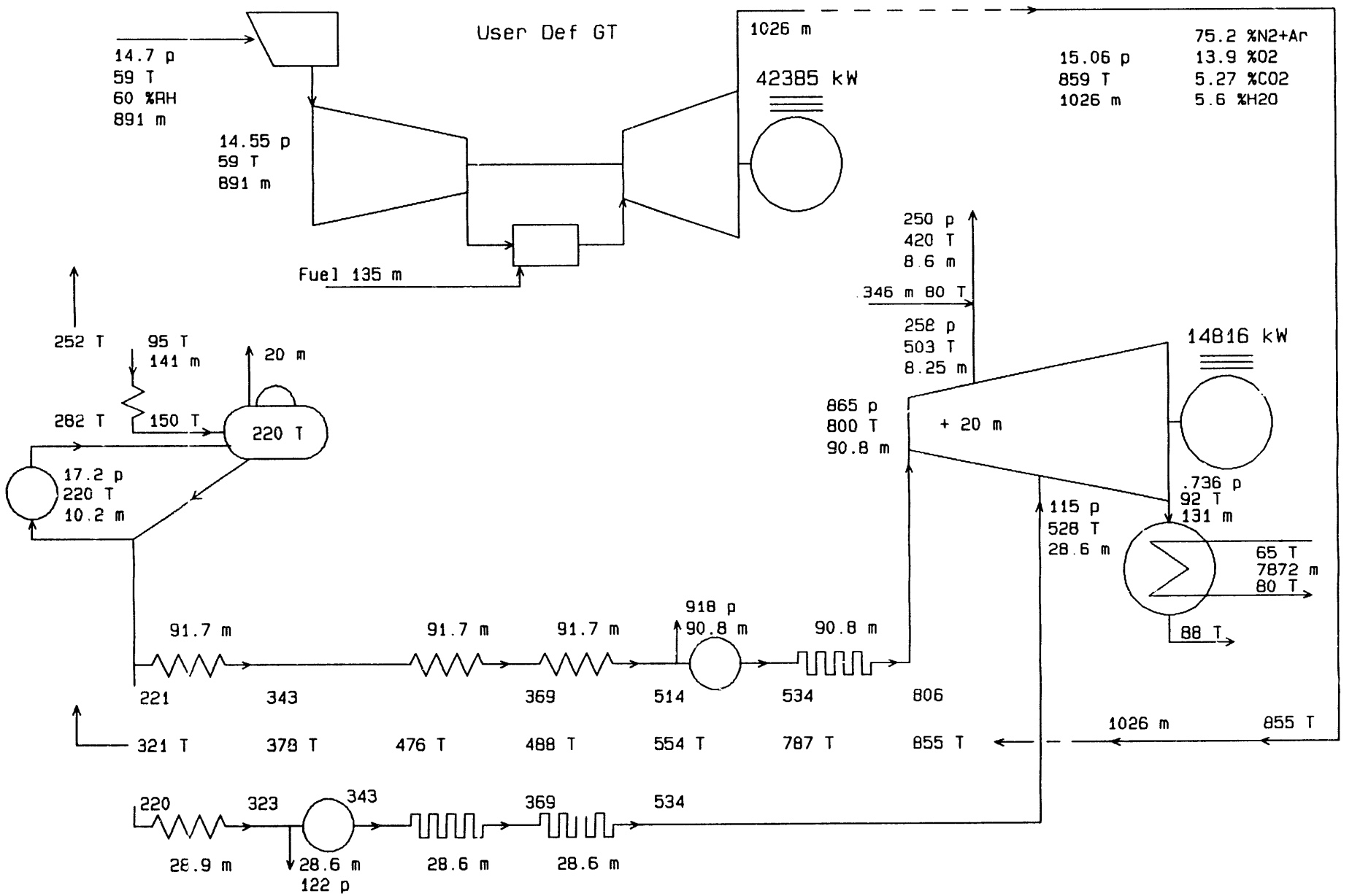

GTPRO 3.31 Michael Brown 10-15-1990 11:31:33
p psia, T F, m kpph

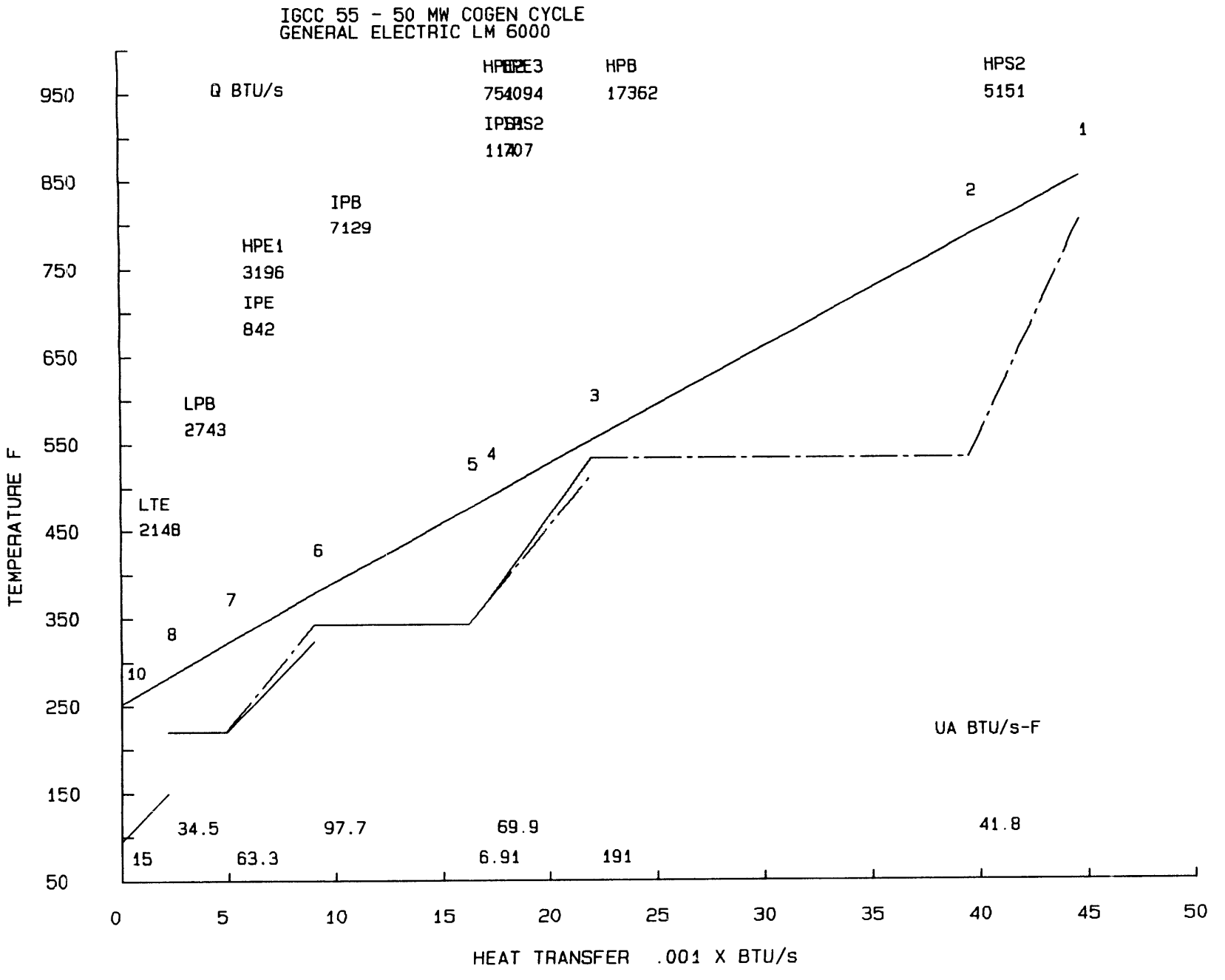

GTPRO 3.31 Michael Brown 10-15-1990 11:31:33

GTPRO 3.31 Michael Brown 10-15-1990 11:31:13
IGCC 55 - 50 MW COGEN CYCLE
GENERAL ELECTRIC LM 6000

ESTIMATED G.T. SITE PERFORMANCE

Fuel=Fuel G.T. @ 100 % rating, XIGV= 0
Site ambient conditions: 14.7 psia, 59 F, 60 % RH
Inlet loss= 4 inch H2O, exhaust loss= 10 inch H2O
Evap. inlet cooler to 0 % RH.

#	Model	PR	TIT F	TET F	Mair kpph	kWe	H.R.LHV BTU/kWh	Mex kpph	N2+Ar %	O2 %	CO2 %	H2O %
52	User Def GT	0.0	0	859	891	42385	8640	1026	75.25	13.88	5.27	5.60

Fuel flow = 135 kpph
G.T. auxillary power = 0 kWe.

ESTIMATED G.T. CYCLE

STREAM	TEMP. F	PRESS. psia	MASSFLOW kpph	M.W.	MOLE COMPOSITION % N2+Ar	O2	CO2	H2O
Ambient air in	59	14.70	890.62	28.75	78.22	20.74	0.03	1.01
Compr. inlet	59	14.55	890.62	28.75	78.22	20.74	0.03	1.01
Turbine coolant	misc.		0.00					
Turbine exhaust	859	15.06	1026.07	28.85	75.25	13.88	5.27	5.60

Compressor= 0 Turbine= 0 Mech. loss= 437 kW
GT specific power @ gen term= 47.6 kW per kpph
GT efficiency @ gen term= 36.34 % HHV = 39.49 % LHV

GAS TURBINE/GENERATOR HEAT BALANCE

Energy in = 113831 BTU/s

Inlet air Sensible	Inlet air Latent	Water Inj.	Steam Inj.	Fuel HHV
1629	1647	0	0	110555

Energy out = 112880 BTU/s

Incompl comb & carcass rad	GT Mech. Losses	Gearbox Loss	Generator Loss	Exhaust Sensible	Exhaust Latent	Electric Output	Proc Air
509	277	0	828	60612	10478	40175	0

Zero enthalpy: dry gases & liquid water @ 32 F (273.15 K)
Heat Balance Error = In - Out = 951 BTU/s = .835 %

GTPRO 3.31 Michael Brown 10-15-1990 11:31:18 Steam cycle p.1
IGCC 55 - 50 MW COGEN CYCLE
GENERAL ELECTRIC LM 6000
Type: 6 Subtype: 2 Induction

	p psia	T F	h BTU/lb	m kpph	UA BTU/s-F	Q BTU/s	A sq.ft
Cnd rtrn	0.74	87.57	55.58	131.133			
Stm rtrn	17.72	250.00	218.49	6.450			
Makeup	17.72	80.00	48.02	3.344	(Includes .346	kpph	for desup)
FW supl	17.72	94.90	62.89	140.581			
LTE				140.581	15	2148	6637
from LTE	17.20	150.00	117.88	140.581			
LPB				10.230	35	2743	14104
water bleed				20.020			
htd. FW	17.20	220.00	188.13	120.561			
HPFW	973.57	220.77	191.77	91.701			
HPE1				91.701	52	3196	22338
6	945.21	342.54	317.23	0.000			
HPE2				91.701	6	751	2510
7	931.44	369.13	346.71	0.000			
HPE3				91.701	57	4094	23587
8	917.68	514.08	507.42	0.000			
Blwdn	917.68	534.08	529.60	0.908			
HPB				90.793	191	17362	72514
9	917.68	534.08	1195.63	0.000			
HPS1				90.793	0	0	0
10	917.68	534.08	1195.63	0.000			
HPS2				90.793	42	5151	20189
11	890.95	806.00	1399.87	0.000			
Into HPT	865.00	800.00	1397.61	90.793			
bef addn	500.00	673.58	1345.06	90.793			
HPT addn	500.00	466.58	1205.38	20.020			
aft addn	500.00	628.54	1319.82	110.813			
HPT bld.	257.50	502.67	1266.76	8.254			
Desuperhtr				0.346			
HPT proc	250.00	420.00	1214.85	8.600			
HPT exit	115.00	359.02	1201.10	102.559			
IPFW	125.66	220.09	188.55	28.860			
IPE				28.860	11	842	4825
1	122.00	322.54	293.59	0.000			
Blwdn	122.00	342.54	314.10	0.286			
IPB				28.575	98	7129	38717
2	122.00	342.54	1191.52	0.000			
IPS1				28.575	1	114	464
3	122.00	369.13	1205.89	0.000			
IPS2				28.575	13	707	6472
4	118.45	534.08	1294.96	0.000			
Into LPT	115.00	392.18	1220.90	131.133			
LPT exit	0.74	91.57	956.02	131.133			

STEAM TURBINE

	No. of steps	Exit Quality	Efficiency(%)	Work (kW)
To HPT additn	2	1.185		
To HPT bleed	2	1.078		
To HPT exit	4	1.012	84.83	5095
To LPT exit	13	0.860	81.13	10179

Gross power = 15274 kW. Mech/Elect losses = 458 kW.
Generator output = 14816 kWe. ST auxiliaries = 104 kWe
Boiler feedpumps = 113 kWe

CONDENSER

	p psia	T F	h BTU/lb	m kpph
LPT exit	0.7365	91.57	956.02	131.13
Saturation	0.7365	91.57		
Condensate well	0.7365	87.57	55.58	131.13
Cooling water in		65.00		7871.91
Cooling water out		80.00		7871.91

Number of passes= 1 UA= 1821 BTU/s-F Surface area = 8905 sq.ft
Tubes: OD = 1 in Length= 38.6 ft number= 882
Cooling water: Velocity= 9 ft/s DP = 9.02 psia Pumps = 88.8 kWe.

STEAM CYCLE HEAT BALANCE

Energy in = 78325 BTU/s

GT Exhaust Sensible	GT Exhaust Latent	Duct Burner Fuel HHV	Makeup+Proc Return	Pump Work	External Steam
60612	10478	0	436	96	6703

Energy out = 78326 BTU/s

Heat Radiated	Blow down	Mech/Elec Losses	Stack Sens.	Stack Latent	Condnsr C.W.	Process Steam	GT Injec.	Proc. Water	Electric Output
839	158	434	15625	10478	32800	2902	0	1046	14043

Zero enthalpy: dry gases & liquid water @ 32 F (273.15 K)
Heat Balance Error = In - Out =-.328 BTU/s = 0 %

HRSG GAS-SIDE PROFILE

Gas	Tg F	Tw F HP/IP	DT F HP/IP	Qg/UA F	DELTA P inch H2O	UA BTU/s-F	Qg BTU/s	Vg ft/s	Tube Rows	Lngth ft
1	855.0	806.0	49.0	124.3	1.1	41.8	5202.6	57.6	4.2	1.7
	787.2	534.1	253.2							
2	787.2	534.1	253.2	91.9	3.6	190.9	17535.8	50.8	15.1	6.3
	554.1	534.1	20.0							
3	554.1	514.1	40.0							
3	554.1	534.1	20.0	69.4	1.3	69.9	4848.8	44.1	6.2	2.6
	488.3	369.1	119.2							
	488.3	369.1	119.2							
4	488.3	369.1	119.2							
4	488.3	369.1	119.2	126.4	0.1	6.9	873.5	42.4	0.6	0.3
	476.4	342.5	133.8							
	476.4	342.5	133.8							
5	476.4	342.5	133.8	73.7	1.4	97.7	7200.1	39.9	8.0	3.4
	377.5	342.5	35.0							
6	377.5	342.5	35.0							
6	377.5	322.5	55.0	64.4	0.9	63.3	4078.3	36.4	5.6	2.4
	321.1	220.8	100.3							
	321.1	220.1	101.0							
7	321.1	220.0	101.0	80.2	0.4	34.5	2770.7	34.2	2.9	1.2
	282.5	220.0	62.5							
8	282.5	150.0	132.5	144.5	0.2	15.0	2169.0	32.7	1.4	0.6
	252.2	94.9	157.3							

Duct burner fuel= 0 kpph
Gas mole composition: 75.2 %N2+Ar 13.9 %O2 5.27 %CO2 5.6 %H2O .002 %SO2
Flue gas dew point = 95 F M.W.= 28.9

HRSG TOTALS	Economisers	Evaporators	Superheaters	TOTAL
Q BTU/s	11030	27234	5972	44237
UA BTU/s-F	141	323	56	520
A sq.ft	59897	125336	27125	212357

Prime surface= 12353 fin surface= 200004 sq.ft. Averaged fin eff.= .721
HRSG frontal area = 318 sq.ft. Gas mass flux= 6.4 kpph/sq.ft
HRSG length = 18.4 ft, 44.1 tube rows, 764 ft of tubes per row.
2 in dia. tubes with serrated fins, staggered arrangement.
Fin thickness/dia.= .03 , height/dia.= .4 , spacing/dia.= .07
Tube transverse pitch/dia.= 2.5 , row longitudinal pitch/dia.= 2.5

GE LM 6000

Water cooling

air to coal ratio	2.41	air pressure	424	Cp air	0.248
water coal ratio	0.255	air temperature	955	Cp water	1.000
air to water ratio	9.45	water temperature	80	Cp steam	0.455

	lb	wt %	mols	mol %	partial pressure		
air	9.45	90.43%	0.33	85.55%	362.72		
water	1.00	9.57%	0.06	14.45%	61.28	sat temp	294

Temperature of combined stream entering boost compressor

399.50 F sat pressure 247 psia Rel. Hum. 24.81%

Temperature of stream exiting compressor (85% comp eff)

Tf = Ti + (Ti/n*((Pf/Pi)^((k-1)/k)-1))

where
Ti - inlet temperature - 399.50 F - 859.50 R
n - efficiency - 85.00%
k - ratio of specific heat @ constant pressure to specific
  to specific heat @ constant volume 1.384
Pf - final pressure 500 psia
Pi - initial pressure 424 psia

Tf = 446.83 F

	A	B	C	D	E	F	G	H	I	J	K	L	M	N	O
1	Standardized IGCC Gasifier Cogen Application													Reference Coal -	
2	Mass & Energy Balance					GE LM 6000		Plant		Full Load				Predicted Gasifier Out	
3	Stream No.			1		2		3		4				5	
4	Identification			AR Coal		Coal Fines		Sized Coal		CompAir@	2.41 A/C			Water @	0.26
5	From			Illinois #6		Sizer @	30%	Combined Streams		Aux Compr &/or Booster Compr				Cooling Water	H2O/
6	To			Sizer		Briquetting		Gasifier		Gasifier				Gasifier	Coal
7	Gas	Mol Wt		lb/hr	wt %	lb/hr	wt %	lb/hr	wt %	lb/hr	lb/mol	wt %	mol%	lb/hr	
8															
9	CO	28.010								0	0.00	0.00	0.00		
10	H2	2.016								0	0.00	0.00	0.00		
11	CO2	44.010								44	0.01	0.05	0.03		
12	H2O	18.015								585	0.18	0.64	1.02	9,932	
13	CH4	16.042								0	0.00	0.00	0.00		
14	C2H6	30.068								0	0.00	0.00	0.00		
15	H2S	34.076								0	0.00	0.00	0.00		
16	COS	60.070								0	0.00	0.00	0.00		
17	N2	28.013								69,070	21.65	75.03	77.28		
18	Ar	39.948								1,209	0.38	1.31	0.95		
19	HCl	36.461								0	0.00	0.00	0.00		
20	HCN	27.026								0	0.00	0.00	0.00		
21	NH3	17.030								0	0.00	0.00	0.00		
22	CS2	76.131								0	0.00	0.00	0.00		
23	SO2	64.059								0	0.00	0.00	0.00		
24	NO	30.006								0	0.00	0.00	0.00		
25	O2	31.999								21,154	6.63	22.98	20.72		
26	NaCl	58.497								0	0.00	0.00	0.00		
27	KCl	74.596								0	0.00	0.00	0.00		
28	Total Gas (lb/hr)									92,062	28.86	100.00	100.00	9,932	
29															
30	Volumetric Flow Rates (STP 14.7 psia, 59F)														
31	(acfm)									1,035					
32	(scfm)									20,144					
33															
34	Heat (BTU/lb)													1257	
35	Cp (BTU/lb F)									0.246					
36	HHV (BTU/lb)			10,776		10,776		10,776		0					
37	LHV (BTU/lb)			10,239		10,239		10,260		0					
38	Sensible Heat above														
39	59 F Btu/lb steam			0		0		0		95					
40	Latent Heat of														
41	Water Btu/lb steam									7					
42															
43	Chemical Heat			391.13		117.34		407.64		0.00					
44	(LHV) MBtu/hr														
45	Sensible Heat			0.00		0.00		0.00		8.78					
46	above 59 F MBtu/hr														
47	Latent Heat			20.51		6.15		20.51		0.61					
48	of Water MBtu/hr														
49	TotalHeat(MBtu/hr)			411.64		123.49		428.15		9.39				12.48	
50				Number of Gasifiers for 85% Plant Availability @90% Gasifier Availability,										500	psia
51															
52	C	12.011		22,962	60.11%	6,889	60.11%	24,148	60.78%		12				
53	H	1.008		1,593	4.17%	478	4.17%	1,593	4.01%		65			1,104	
54	O	16.000		2,892	7.57%	868	7.57%	2,892	7.28%		21,706			8,828	
55	N	14.007		451	1.18%	135	1.18%	451	1.13%		69,070			9,932	Total
56	S	32.060		1,100	2.88%	330	2.88%	1,100	2.77%		90,853	Total			
57	CL2	35.500		0	0.00%	0	0.00%	0	0.00%						
58	H2O	18.016		5,386	14.10%	1,616	14.10%	5,386	13.56%						
59	ZnFe2O4														
60	ZnS														
61	FeS														
62	Fe2O3														
63	ZnO														
64	ASH			3,820	10.00%	1,146	10.00%	4,162	10.48%						
65	Total Solids			38,200	100.01%	11,460	100.01%	39,732	100.00%						
66	Total Flow (pph)			38,200 *		11,460		39,732		92,062				9,932	
67															
68	Total Flow (pps)			10.61		3.18		11.04		25.57				2.76	
69	Pressure (psia)			14.7		14.7		14.7		500 *				500 *	
70	Temperature (F)			59		59		59		447 *				447 *	

O	P	Q	R	S	T	U	V	W	X	Y	Z	AA	AB	AC	AD
•	Illinois #6								J-1538		DE-AC21-89MC26291				1
ler Output			10/16/90				Revision 7								2
	6	Uncomb	7		8		9				10	55 scf/lb of coal			3
0.26	Ash	Carbon	Fines (Char)		Tar		Dust(per RTI dia)		Miscellaneous		Hot Gas with Tars				4
H2O/	Gasifier	2.69%	Gasifier @	4.00%	Gasifier @	6.00%	Final Cyclone		Gasifier Heat		Gasifier	N2 in coal			5
Coal	Ash Silo		Briquetting		HGCU		Reclaim		Losses		HGCU	to NH3 Conv		90.1%	6
	lb/hr	wt %	lb/hr	wt %	lb/hr	wt %	lb/hr	wt %			lb/hr	lb/mol	wt %	mol %	7
															8
											35,650	6.39	26.26	22.82	9
											1,604	0.29	1.18	14.26	10
											15,954	2.86	11.75	6.50	11
992											6,931	1.24	5.11	6.90	12
											2,913	0.52	2.15	3.26	13
											578	0.10	0.43	0.34	14
											1,002	0.18	0.74	0.53	15
											295	0.05	0.22	0.09	16
											69,114	12.39	50.91	44.24	17
											1,209	0.22	0.89	0.54	18
											0	0.00	0.00	0.00	19
											47	0.01	0.03	0.03	20
											463	0.08	0.34	0.49	21
											0	0.00	0.00	0.00	22
											0	0.00	0.00	0.00	23
											0	0.00	0.00	0.00	24
											0	0.00	0.00	0.00	25
											0	0.00	0.00	0.00	26
											0	0.00	0.00	0.00	27
32											135,760	24.34	100.00	100.00	28
															29
											135,760				30
											3,159				31
											35,227				32
															33
257															34
	0.260		0.260		0.26		0.260				0.329				35
	0		10,936		17,329		0				2,588.8				36
	0		10,936		16,571		0				2,375.0				37
															38
	154		276		276		323				349				39
															40
	0		0		749		0				214				41
															42
	8.96		16.71		37.98		0.00				322.43				43
															44
	0.68		0.42		0.63		0.06		20.3 Water/steam		47.34				45
									jacket						46
	0.00		0.00		1.72		0.00		4.7 Traversing		29.04	Gas HHV=	189	Btu/scf	47
									Stirrer			Estimated=	600	Btu/lb	48
48	9.64		17.13		40.33		0.06		23.1 Total		398.80	Calculated=	623	Btu/lb	49
pais & 17 tph (typical) Coal each:			1.6			Unit Output (MWn)			54.6 MWn			BulkGas=	4.05%	H2O	50
												Calc Comb Temp (F)		2280	51
	618	13.92	1,186	77.60%	2,017	88.00%					22,356	22,356	0.00%		52
34			0	0.00%	183	8.00%					3,360	3,360	0.00%		53
18			0	0.00%	46	2.00%					38,214	38,214	0.00%		54
12 Total			0	0.00%	23	1.00%					69,521	69,520	0.00%		55
	0	0.00	0	0.00%	23	1.00%					1,100	1,100	-0.02%		56
			0	0.00%						Sub-Totals	134,551	134,551	0.00%		57
			0	0.00%							Sum of	Sum of Gas	Mass		58
							173	90			Streams	Constituents	Unbalance		59
							4	2			balance check				60
							12	6			FERC Cycle Efficiency(g)= 49.96%				61
							0	0			FERC Cycle Efficiency(n)= 47.79%				62
							4	2							63
	3,820	86.08	342	22.40%			0	0							64
	4,438	100	1,528	100.00%	2,292	100.00%	193	100							65
12	4,438		1,528		2,292		193				135,760				66
															67
76	1.23		0.42		0.64		0.05				37.71				68
00 •	14.7		500 •		500 •		499				499				69
47 •	650		1120		1120		1300				1120				70

	AE	AF	AG	AH	AI	AJ	AK	AL	AM	AN	AO	AP	AQ	AR
1	**Standardized IGCC Gasifier Cogen Application**											**Reference Coal - Il**		
2	**Mass & Energy Balance**			**GE LM 6000**				**Plant**				**Predicted Gasifier Ou**		
3	Stream No.		11				12				13	14		
4	Identification		Air				Bleed Air				Bleed Air	Compressor Discharge		
5	From		Atmosphere				Compressor				for	Compressor		
6	To		Gas Turbine Compressor				Booster Compressor Cooler				Coolant	Combustor		
7	Gas	Mol Wt	lb/hr	lb/mol	wt %	mol %	lb/hr	lb/mol	wt %	mol %	lb/hr	lb/hr	lb/mol	wt %
8														
9	CO	28.010	0	0.00	0.00	0.00	0	0.00	0.00	0.00	0	0	0.00	0.00
10	H2	2.016	0	0.00	0.00	0.00	0	0.00	0.00	0.00	0	0	0.00	0.00
11	CO2	44.010	465	0.01	0.05	0.03	44	0.01	0.05	0.03	78	344	0.01	0.05
12	H2O	18.015	6,249	0.18	0.64	1.02	585	0.18	0.64	1.02	1,049	4,614	0.18	0.64
13	CH4	16.042	0	0.00	0.00	0.00	0	0.00	0.00	0.00	0	0	0.00	0.00
14	C2H6	30.068	0	0.00	0.00	0.00	0	0.00	0.00	0.00	0	0	0.00	0.00
15	H2S	34.076	0	0.00	0.00	0.00	0	0.00	0.00	0.00	0	0	0.00	0.00
16	COS	60.070	0	0.00	0.00	0.00	0	0.00	0.00	0.00	0	0	0.00	0.00
17	N2	28.013	737,350	21.65	75.03	77.28	69,070	21.65	75.03	77.28	123,810	544,470	21.65	75.03
18	Ar	39.948	12,909	0.38	1.31	0.95	1,209	0.38	1.31	0.95	2,168	9,532	0.38	1.31
19	HCl	36.461	0	0.00	0.00	0.00	0	0.00	0.00	0.00	0	0	0.00	0.00
20	HCN	27.026	0	0.00	0.00	0.00	0	0.00	0.00	0.00	0	0	0.00	0.00
21	NH3	17.030	0	0.00	0.00	0.00	0	0.00	0.00	0.00	0	0	0.00	0.00
22	CS2	76.131	0	0.00	0.00	0.00	0	0.00	0.00	0.00	0	0	0.00	0.00
23	SO2	64.059	0	0.00	0.00	0.00	0	0.00	0.00	0.00	0	0	0.00	0.00
24	NO	30.006	0	0.00	0.00	0.00	0	0.00	0.00	0.00	0	0	0.00	0.00
25	O2	31.999	225,827	6.63	22.98	20.72	21,154	6.63	22.98	20.72	37,919	166,754	6.63	22.98
26	NaCl	58.497	0	0.00	0.00	0.00	0	0.00	0.00	0.00	0	0	0.00	0.00
27	KCl	74.596	0	0.00	0.00	0.00	0	0.00	0.00	0.00	0	0	0.00	0.00
28	Total Gas (lb/hr)		982,800	28.86	100.00	100.00	92,062	28.86	100.00	100.00	165,024	725,714	28.86	100.00
29														
30	Volumetric Flow Rates (STP 14.7 psia, 59F)													
31	(acfm)		215,042				1,904					15,009		
32	(scfm)		215,042				20,144				36,367	158,790		
33														
34	hgAdiabHeat(BTU/lb)													
35	Cp (BTU/lb F)		0.240				0.262					0.262		
36	HHV (BTU/lb)		0.0				0.0					0.0		
37	LHV (BTU/lb)		0.0				0.0					0.0		
38	Sensible Heat													
39	above 59 F Btu/lb		0				235					235		
40	Latent Heat													
41	of Water Btu/lb		7				7					7		
42														
43	Chemical Heat		0.00				0.00					0.00		
44	(LHV) MBtu/hr													
45	Sensible Heat		0.00				21.65					170.67		
46	above 59 F MBtu/hr													
47	Latent Heat		6.50				0.61					4.80		
48	of Water MBtu/hr													
49	TotalHeat(MBtu/hr)		6.50				22.26					175.47		
50												Parasitic Load		2.62 M
51														
52	C	12.011		127				12			21		94	94
53	H	1.008		694				65			117		513	513
54	O	16.000		231,719				21,706			38,909		171,105	171,105
55	N	14.007		737,350				69,070			123,810		544,470	544,470
56	S	32.060		0				0			0		0	0
57	CL2	35.500		969,891	sub-totals			90,853	sub-totals		162,856	sub-totals	716,182	716,182
58	H2O	18.016												balance check
59	ZnFe2O4													
60	ZnS													
61	FeS													
62	Fe2O3													
63	ZnO													
64	ASH													
65	Total Solids													
66	Total Flow (pph)		982,800				92,062				165,024	725,714		
67														
68	Total Flow (pps)		273.00 *				25.57			*	45.84	201.59		
69	Pressure (psia)		14.7 *				424 *					424		
70	Temperature (F)		59 *				955 *					955		

Illinois #6 — J-1538 — DE-AC21-89MC26291

er Output — Revision 7 — 10/16/90

AR	AS	AT	AU	AV	AW	AX	AY	AZ	BA	BB	BC	BD	BE	BF	BG
Discharge		15 Fuel HGCU GT Combustor		%H2S Removed 99.0%		16 Inlet Gas GT Combustor GT Expander		Thrml NO (ppmvd) *Rich/Lean Red. F		25 85%	17 Exhaust Gas Gas Turbine				1
															2
															3
															4
															5
															6
wt %	mol %	lb/hr	mol/hr	wt %	mol %	lb/hr	lb/mol	mols	wt %	mol %	lb/hr	mols/hr	wt %	mol %	7
															8
0.00	0.00	35,650	1,273	26.38	22.84	0	0.00	0.00	0.00	0.00	0	0.00	0.00	0.00	9
0.00	0.00	1,584	786	1.17	14.10	0	0.00	0.00	0.00	0.00	0	0.00	0.00	0.00	10
0.05	0.03	15,954	363	11.80	6.51	82,102	2.76	0.0022	9.54	6.28	82,180	1867.30	8.01	5.27	11
0.64	1.02	7,631	424	5.65	7.60	34,851	1.17	0.00	4.05	6.51	35,900	1992.80	3.50	5.62	12
0.00	0.00	2,913	182	2.16	3.26	0	0.00	0.00	0.00	0.00	0	0.00	0.00	0.00	13
0.00	0.00	578	19	0.43	0.34	0	0.00	0.00	0.00	0.00	0	0.00	0.00	0.00	14
0.00	0.00	10	0	0.01	0.01	0	0.00	0.00	0.00	0.00	0	0.00	0.00	0.00	15
0.00	0.00	3	0	0.00	0.00	0	0.00	0.00	0.00	0.00	0	0.00	0.00	0.00	16
75.03	77.28	69,114	2,467	51.14	44.28	613,907	20.66	0.0255	71.31	73.76	737,717	26334.81	71.91	74.33	17
1.31	0.95	1,209	30	0.89	0.54	10,741	0.36	0.00	1.25	0.90	12,909	323.14	1.26	0.91	18
0.00	0.00	0	0	0.00	0.00	0	0.00	0.00	0.00	0.00	0	0.00	0.00	0.00	19
0.00	0.00	47	2	0.03	0.03	0	0.00	0.00	0.00	0.00	0	0.00	0.00	0.00	20
0.00	0.00	463	27	0.34	0.49	0	0.00	0.00	0.00	0.00	0	0.00	0.00	0.00	21
0.00	0.00	0	0	0.00	0.00	0	0.00	0.00	0.00	0.00	0	0.00	0.00	0.00	22
0.00	0.00	0	0	0.00	0.00	22	0.0007	0.0000	0.0026	0.0012	22	0.34	0.00	0.00	23
0.00	0.00	0	0	0.00	0.00	180	0.0060	0.0000	0.0209	0.0202	180	5.99	0.02	0.02	24
22.98	20.72	0	0	0.00	0.00	119,068	4.01	0.0043	13.83	12.52	156,987	4906.00	15.30	13.85	25
0.00	0.00	0	0	0.00	0.00	0	0.00	0.00	0.00	0.00	0	0.00	0.00	0.00	26
0.00	0.00	0	0	0.00	0.00	0	0.00	0.00	0.00	0.00	0	0.00	0.00	0.00	27
100.00	100.00	135,156	5,572	100.00	100.00	860,870	28.97	0.0345	100.00	100.00	1,025,894	35430.38	100.00	100.00	28
						860,871 bal ck					1,025,895	bal ck			29
															30
		3,275				34,020					552,350				31
		35,181				187,588					223,696				32
															33
															34
		0.334				0.288					0.267				35
		2,548.9				0.0					0.0				36
		2,330.0				0.0					0				37
															38
		375				619					214				39
															40
		219				42					36				41
															42
		314.92				0.00					0.00				43
															44
		50.62				533.30					219.50				45
															46
		29.58				36.25					37.34				47
															48
		395.11				569.54	570.58 bal chk				256.84				49
2.62 MWg			Combustion Turbine Output			42.385 MWg					1.04 Turbine Compressor Surge Margin				50
															51
94	0.00%		22,298			22,391	22,391	0.00%			22,413	22,413	0.00%		52
513	0.00%		3,360			3,872	3,872	0.00%			3,989	3,989	0.00%		53
171,105	0.00%		38,758			209,863	209,864	0.00%			248,772	248,772	0.00%		54
544,470	0.00%		69,520			613,991	613,991	0.00%			737,801	737,801	0.00%		55
0	0.00%		11			11	11	0.10%			11	11	0.00%		56
716,182	0.00%		133,947	sub-total		850,129	850,130	0.00%	sub-total		1,012,986	1,012,986	0.00%	sub-total	57
ances check								balance check					balance check		58
															59
															60
															61
															62
															63
															64
															65
		135,156				860,870					1,025,894				66
															67
		37.54				239.13					284.97				68
		499				417 *					15.13				69
		1180				2,210 *					859 *				70

	BH	BI	BJ	BK	BL	BM	BN	BO	BP	BQ	BR	BS
1	**Standardized IGCC Gasifier Cogen Application**						**Reference Coal -**				**Illinois #6**	
2	**Mass & Energy Balance**			**GE LM 6000**			**Predicted Gasifier Output**					
3	Stream No.			18			19	Thrml NO (ppmvd)		25	20	21
4	Identification			Fuel for Supplementary Firing			Flue Gas		SCR Red F	80%	Superheated Steam	Low Pressure St
5	From			Gasifier			HRSG		R/L Red F	85%	HRSG	HRSG
6	To			HRSG			Stack		NOx Reburn F	0%	Steam Turbine	Steam Turbi
7	Gas	Mol Wt	lb/hr	lb/mol	wt %	mol%	lb/hr	mols/hr	wt %	mol%	lb/hr	lb/hr
8												
9	CO	28.010	0	6.39	26.26	22.82	0	0.00	0.00	0.00		
10	H2	2.016	0	0.29	1.18	14.26	0	0.00	0.00	0.00		
11	CO2	44.010	0	2.86	11.75	6.50	82,180	1867.30	8.01	5.27		
12	H2O	18.015	0	1.24	5.11	6.90	35,900	1992.80	3.50	5.63		
13	CH4	16.042	0	0.52	2.15	3.26	0	0.00	0.00	0.00		
14	C2H6	30.068	0	0.10	0.43	0.34	0	0.00	0.00	0.00		
15	H2S	34.076	0	0.18	0.74	0.53	0	0.00	0.00	0.00		
16	COS	60.070	0	0.05	0.22	0.09	0	0.00	0.00	0.00		
17	N2	28.013	0	12.39	50.91	44.24	737,717	26334.81	71.92	74.34		
18	Ar	39.948	0	0.22	0.89	0.54	12,909	323.14	1.26	0.91		
19	HCl	36.461	0	0.00	0.00	0.00	0	0.00	0.00	0.00		
20	HCN	27.026	0	0.01	0.03	0.03	0	0.00	0.00	0.00		
21	NH3	17.030	0	0.08	0.34	0.49	0	0.00	0.00	0.00		
22	CS2	76.131	0	0.00	0.00	0.00	0	0.00	0.00	0.00	Stack Emissions (lb/MBtu)	
23	SO2	64.059	0	0.00	0.00	0.00	22	0.34	0.00	0.00	0.053	
24	NO	30.006	0	0.00	0.00	0.00	36	1.20	0.00	0.00	0.09	
25	O2	31.999	0	0.00	0.00	0.00	156,987	4906.00	15.30	13.85		
26	NaCl	58.497	0	0.00	0.00	0.00	0	0.00	0.00	0.00		
27	KCl	74.596	0	0.00	0.00	0.00	0	0.00	0.00	0.00		
28	Total Gas (lb/hr)		0	24.34	100.00	100.00	1,025,750	35425.59	100.00	100.00		
29							1,025,751	bal chk				
30	Volumetric Flow Rates (STP 14.7 psia, 59F)											
31	(acfm)		0				306,840					
32	(scfm)		0				223,666					
33												
34	Heat (BTU/lb)										1398	
35	Cp (BTU/lb F)		0.334				0.247					
36	HHV (BTU/lb)		2548.9				0.0					
37	LHV (BTU/lb)		2330.0				0					
38	Sensible Heat above											
39	59 F Btu/lb steam		0				48					
40	Latent Heat of											
41	Water Btu/lb steam		0				36					
42												
43	Chemical Heat		0.00				0.00					
44	(LHV) MBtu/hr											
45	Sensible Heat		0.00				48.93					
46	above 59 F MBtu/hr											
47	Latent Heat		0.00				37.34					
48	of Water MBtu/hr											
49	TotalHeat(MBtu/hr)		0.00				86.26				126.93	
50												HRSG Turbine C
51												
52	C	12.011		0			22,413	22,413	0.00%			
53	H	1.008		0			3,989	3,989	0.00%			
54	O	16.000		0			248,696	248,696	0.00%			
55	N	14.007		0			737,734	737,734	0.00%			
56	S	32.060		0			11	11	0.00%			
57	CL2	35.500		0	sub-total		1,012,842	1,012,842	0.00%	sub-total		
58	H2O	18.016										
59	ZnFe2O4											
60	ZnS											
61	FeS											
62	Fe2O3											
63	ZnO											
64	ASH											
65	Total Solids											
66	Total Flow (pph)		0				1,025,894				90,792	
67												
68	Total Flow (pps)		0 *				284.97				25.22	
69	Pressure (psia)		499				14.7				865	
70	Temperature (F)		1180				252 *				800	

BS	BT	BU	BV	BW
	J-1538	DE-AC21-89MC26291		1
	Revision 7		10/16/90	2
21	22	23	24	3
Pressure Steam	Make Up Water	Sat. Steam	Process Stm	4
HRSG	WaterTreatment	Gasifier	Stm Turbine	5
Steam Turbine	HRSG	Steam Turbine	Process Facility	6
lb/hr	lb/hr	lb/hr	lb/hr	7
				8
				9
				10
				11
				12
				13
				14
				15
				16
				17
				18
				19
				20
				21
				22
				23
				24
				25
				26
				27
				28
				29
				30
				31
				32
				33
1237.6	48	1204	1214.5	34
				35
				36
				37
				38
				39
				40
				41
				42
				43
				44
				45
				46
				47
				48
35.72	0.64	20.34	10.44	49
Turbine Output	14.8	MWg		50
				51
				52
				53
				54
				55
				56
				57
				58
				59
				60
				61
				62
				63
				64
				65
28,860	13,276	20,020	8,600	66
				67
8.02	3.69	5.56	2.39	68
115	15	500	250	69
432	80	467	420	70

	BX	BY	BZ	CA	CB	CC	CD	CE	CF	CG	CH	CI
1	Standardized IGCC Gasifier Cogen Application								Reference Coal -			Illinois #6
2	Mass & Energy Balance				GE LM 6000				Predicted Gasifier Output			
3	Stream No.		25		26					27		27a
4	Identification		Regen Recycle Loop		Conc SO2 Bleed					Elemental Sulfur		Elemental Sulfur
5	From		Recycle Blower		Regen Loop					Reaox Process		DSRP
6	To		Regenerator		SRP					Marketable Byproduct		Marketable Byprod
7	Gas	Mol Wt	lb/hr	wt%	lb/hr	lbs/mol	mols/hr	wt%	mol%	lb/hr	wt%	lb/hr
8												
9	CO	28.010			0	0.00	0.00	0.00	0.00			
10	H2	2.016			0	0.00	0.00	0.00	0.00			
11	CO2	44.010	55	0.05	5	0.02	0.11	0.05	0.04			
12	H2O	18.015	692	0.62	58	0.20	3.20	0.62	1.11			
13	CH4	16.042			0	0.00	0.00	0.00	0.00			
14	C2H6	30.068			0	0.00	0.00	0.00	0.00			
15	H2S	34.076			0	0.00	0.00	0.00	0.00			
16	COS	60.070			0	0.00	0.00	0.00	0.00			
17	N2	28.013	83,693	74.87	6,974	24.10	248.97	74.87	86.02			
18	Ar	39.948	0	0.00	0	0.00	0.00	0.00	0.00			
19	HCl	36.461			0	0.00	0.00	0.00	0.00			
20	HCN	27.026			0	0.00	0.00	0.00	0.00			
21	NH3	17.030			0	0.00	0.00	0.00	0.00			
22	CS2	76.131			0	0.00	0.00	0.00	0.00			
23	SO2	64.059	26,129	23.37	2,177	7.52	33.99	23.37	11.74			
24	NO	30.006			0	0.00	0.00	0.00	0.00			
25	O2	31.999	1,214	1.09	101	0.35	3.16	1.09	1.09			
26	NaCl	58.497			0	0.00	0.00	0.00	0.00			
27	KCl	74.596			0	0.00	0.00	0.00	0.00			
28	Total Gas (lb/hr)		111,784	100.00	9,315	32.19	289	100.00	100.00			
29												
30	Volumetric Flow Rates		(STP 14.7 psia, 59 F)									
31	(acfm)		3,929		310							
32	(scfm)		21,928		1,827							
33												
34	Heat (BTU/lb)											
35	Cp (BTU/lb F)		0.240		0.240					0.000		
36	HHV (BTU/lb)											
37	LHV (BTU/lb)											
38	Sensible Heat above											
39	59 F Btu/lb steam											
40	Latent Heat of											
41	Water Btu/lb steam											
42												
43	Chemical Heat									4.33		
44	(LHV) MBtu/hr											
45	Sensible Heat		35.98		2.77					0.00		
46	above 59 F MBtu/hr											
47	Latent Heat		0.72		0.06					0.00		
48	of Water MBtu/hr											
49	TotalHeat(MBtu/hr)		36.70		2.83					4.33		
50												
51												
52	C	12.011										
53	H	1.008										
54	O	16.000										
55	N	14.007										
56	S	32.060								1,089		
57	CL2	35.500										
58	H2O	18.016										
59	ZnFe2O4											
60	ZnS											
61	FeS											
62	Fe2O3											
63	ZnO											
64	ASH				0.00				0			
65	Total Solids											
66	Total Flow (pph)		111,784		9,315					1,089		
67												
68	Total Flow (pps)		31.05		2.59					0.30		
69	Pressure (psia)		294		294					15		
70	Temperature (F)		1400		1300					284		

CI	CJ	CK	CL	CM
s #6	J-1538	DE-AC21-89MC26291		1
	Revision 7		10/16/90	2
27a	27b	28		3
ntal Sulfur	Sulfur Dioxide	Ash		4
DSRP	SO2 Recovery Unit	SO2 Reductor		5
ble Byproduct	Marketable Byproduct	Disposal		6
lb/hr	lb/hr	lb/hr	wt %	7
				8
				9
				10
				11
				12
				13
				14
				15
				16
				17
				18
				19
				20
				21
				22
				23
				24
				25
				26
				27
				28
				29
				30
				31
				32
				33
				34
0.000	0.000			35
				36
				37
				38
		154	0	39
				40
				41
				42
4.33	4.33	1.56	0	43
				44
0.00	0.00	0.00	0	45
				46
0.00	0.00	0.00	0	47
				48
4.33	4.33	1.56	0.4	49
				50
				51
		108	3	52
				53
				54
				55
1,089	1,089			56
				57
				58
				59
				60
				61
				62
				63
		3,820	97	64
		3,928	100	65
1,089	2,177	3,928	100	66
				67
0.30	0.60	1.09		68
15	100	15		69
190	59	284		70

50 MW Cogen Cycle
General Electric
LM 5000 ST120

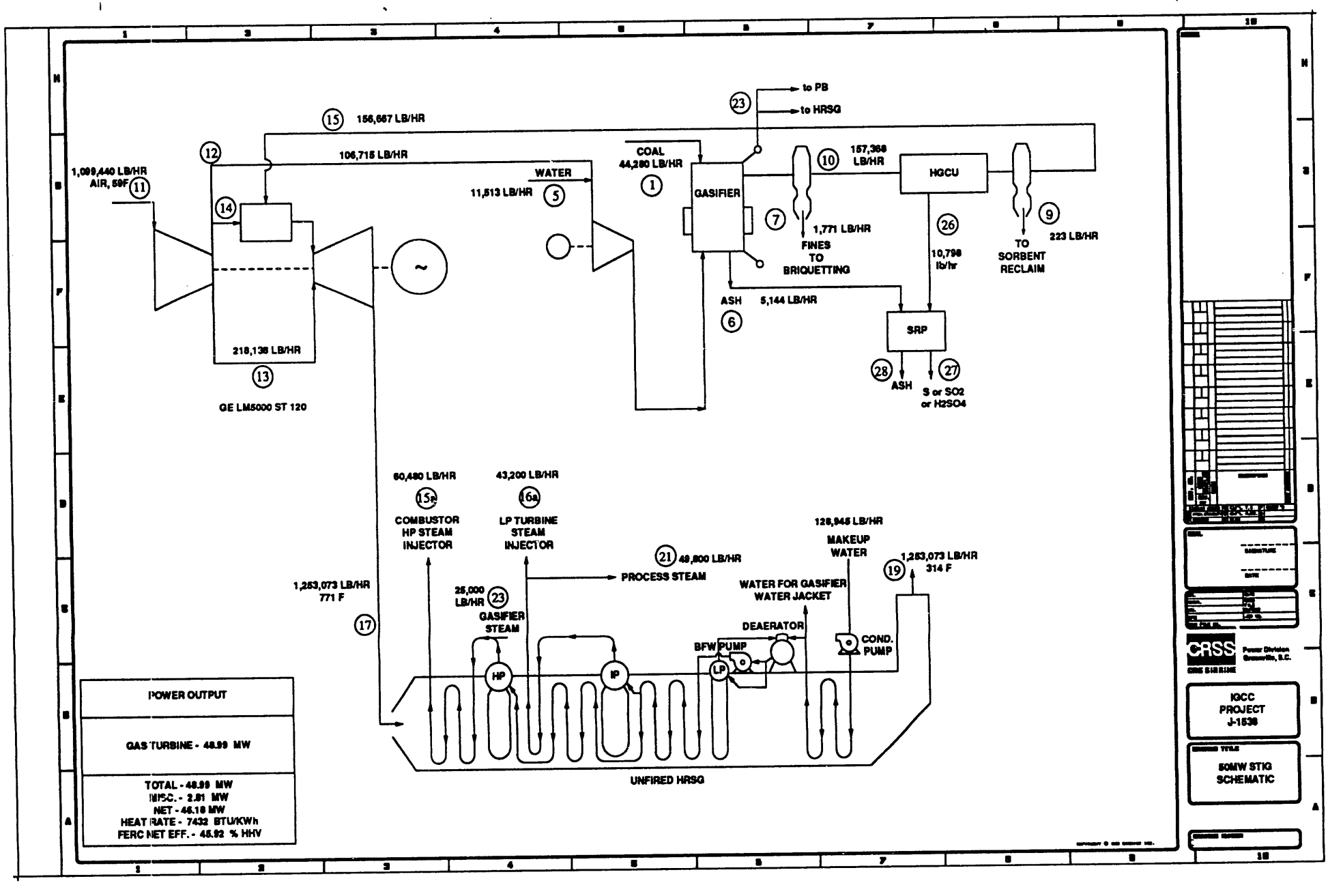
to PB
to HRSG
156,667 LB/HR
106,715 LB/HR
1,099,440 LB/HR
AIR, 59F
WATER
11,513 LB/HR
COAL
44,280 LB/HR
GASIFIER
157,368
LB/HR
HGCU
1,771 LB/HR
FINES
TO
BRIQUETTING
10,798
lb/hr
223 LB/HR
TO
SORBENT
RECLAIM
ASH
5,144 LB/HR
SRP
ASH
S or SO2
or H2SO4
218,138 LB/HR
GE LM5000 ST 120
60,480 LB/HR
43,200 LB/HR
COMBUSTOR
HP STEAM
INJECTOR
LP TURBINE
STEAM
INJECTOR
PROCESS STEAM
49,800 LB/HR
128,945 LB/HR
MAKEUP
WATER
1,253,073 LB/HR
314 F
1,253,073 LB/HR
771 F
25,000
LB/HR
GASIFIER
STEAM
WATER FOR GASIFIER
WATER JACKET
DEAERATOR
BFW PUMP
COND.
PUMP
HP
IP
LP
UNFIRED HRSG
POWER OUTPUT
GAS TURBINE - 48.99 MW
TOTAL - 48.99 MW
MISC. - 2.81 MW
NET - 46.18 MW
HEAT RATE - 7432 BTU/KWh
FERC NET EFF. - 45.92 % HHV
CRSS
Power Division
Greenville, S.C.
IGCC
PROJECT
J-1538
50MW STIG
SCHEMATIC

IGCC 49 - 50 MW COGEN CYCLE
GENERAL ELECTRIC LM 5000 ST120

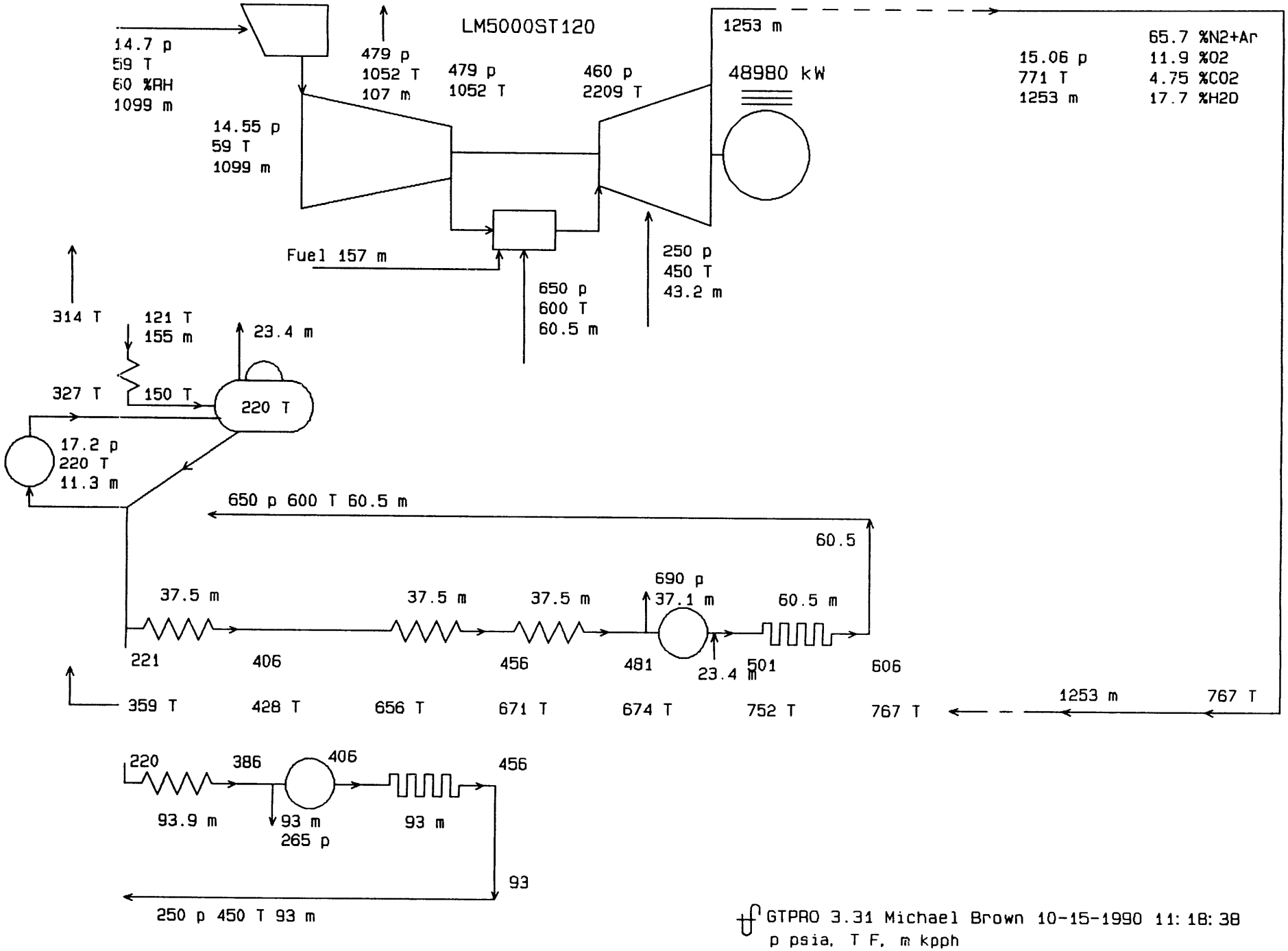

GTPRO 3.31 Michael Brown 10-15-1990 11:18:38
p psia, T F, m kpph

IGCC 49 - 50 MW COGEN CYCLE
GENERAL ELECTRIC LM 5000 ST120

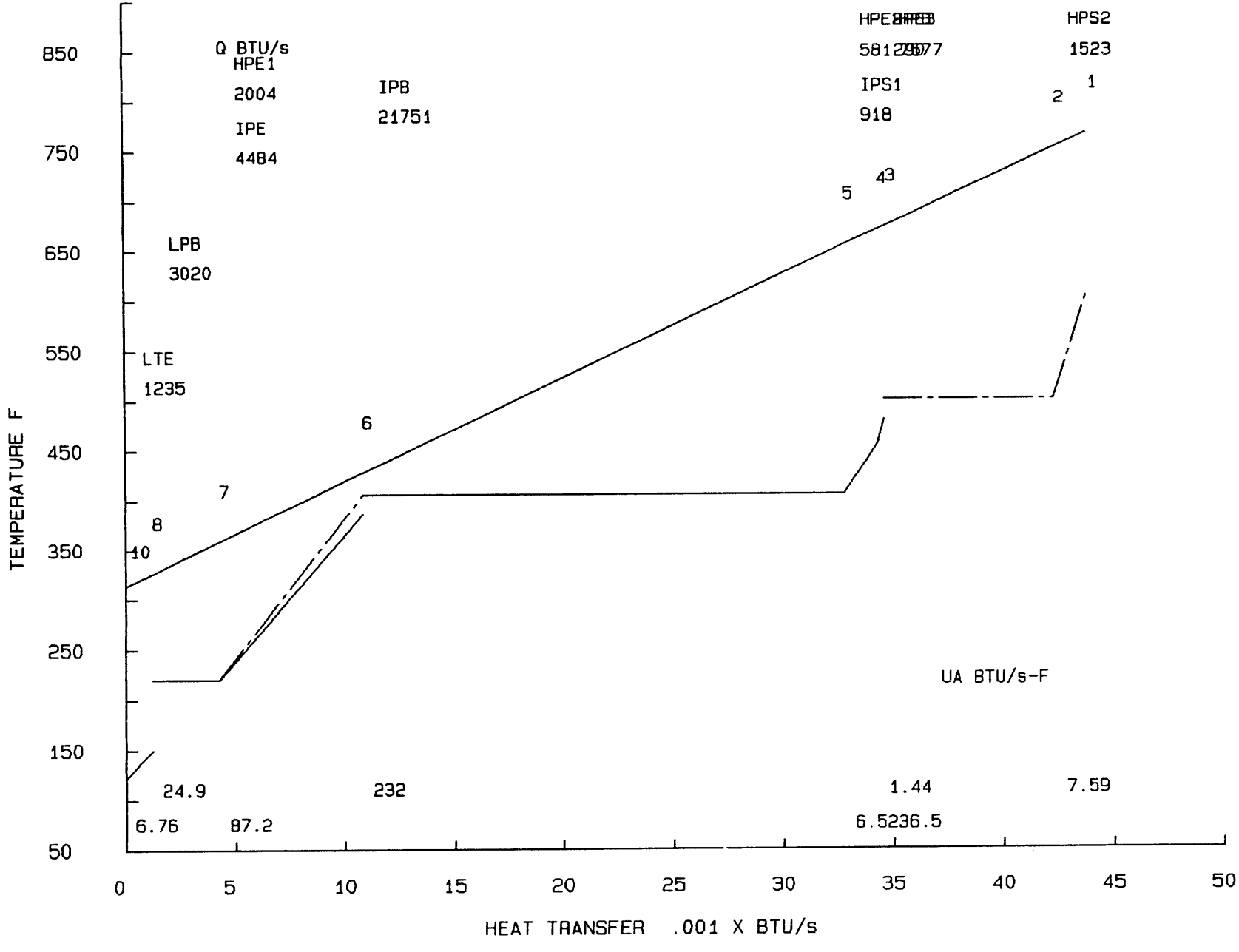

GTPRO 3.31 Michael Brown 10-15-1990 11:18:38

3TPRO 3.31 Michael Brown 10-15-1990 11:18:20
GCC 49 - 50 MW COGEN CYCLE
GENERAL ELECTRIC LM 5000 ST120

ESTIMATED G.T. SITE PERFORMANCE

Fuel=Fuel G.T. @ 100 % rating, XIGV= 0
Site ambient conditions: 14.7 psia, 59 F, 60 % RH
Inlet loss= 4 inch H2O, exhaust loss= 10 inch H2O
Evap. inlet cooler to 0 % RH.

G.T. DEVIATION FROM NOMINAL, CLEAN ENGINE

Compressor inlet airflow % reduction = 0
Compressor efficiency reduction % = 0
Turbine efficiency reduction % = 0
Maximum firing temperature excess over base load = 0 F
Combustor % pressure loss (0 means nominal value) = 0
Combustor inefficiency + heat loss % (0 means nominal value) = 0
Cooling air increase % (0 means nominal value) = 0
Process air bleed location (0 means none) = 1
Process air bleed % of inlet = 9.73

#	Model	PR	TIT F	TET F	Mair kpph	kWe	H.R.LHV BTU/kWh	Mex kpph	N2+Ar %	O2 %	CO2 %	H2O %
1	M5000ST120	32.9	2209	771	1099	48981	8649	1253	65.66	11.93	4.75	17.65

Fuel flow = 157 kpph
Fuel pressure reqd.= 646 psia, compressor power= 875 kWe
G.T. auxillary power = 261 kWe.
Comb. steam inj.= 60.5 kpph @ 650 psia & 600 F
LP steam inj.= 43.2 kpph @ 250 psia & 450 F

ESTIMATED G.T. CYCLE

STREAM	TEMP. F	PRESS. psia	MASSFLOW kpph	M.W.	MOLE COMPOSITION % N2+Ar	O2	CO2	H2O
Ambient air in	59	14.70	1099.45	28.75	78.22	20.74	0.03	1.01
Compr. inlet	59	14.55	1099.45	28.75	78.22	20.74	0.03	1.01
Turbine coolant	misc.		218.14					
Process air bld	1052	478.67	106.98	28.75	78.22	20.74	0.03	1.01
Compr. disch.	1052	478.67	774.34	28.75	78.22	20.74	0.03	1.01
Turbine inlet	2209	459.52	991.50	27.86	67.41	10.86	6.08	15.65
Turbine exhaust	771	15.06	1252.84	27.49	65.66	11.93	4.75	17.65

Compressor= 79107 Turbine= 129228 Mech. loss= 399 kW
Turbine coolant= 19.8 % compr in
Specific power @ gen term= 44.6 kW per kpph
Efficiency @ gen term= 36.3 % HHV = 39.46 % LHV

GAS TURBINE/GENERATOR HEAT BALANCE

Energy in = 168439 BTU/s

Inlet air Sensible	Inlet air Latent	Water Inj.	Steam Inj.	Fuel HHV
2011	2033	0	36509	127885

Energy out = 168364 BTU/s

Incompl comb & carcass rad	GT Mech. Losses	Gearbox Loss	Generator Loss	Exhaust Sensible	Exhaust Latent	Electric Output	Proc Air
467	253	0	708	70312	42320	46427	7877

Zero enthalpy: dry gases & liquid water @ 32 F (273.15 K)
Heat Balance Error = In - Out = 74.8 BTU/s = .044 %

TPRO 3.31 Michael Brown 10-15-1990 11:18:27 Steam cycle p.1
GCC 49 - 50 MW COGEN CYCLE
ENERAL ELECTRIC LM 5000 ST120
: 2 Subtype: 2

	P psia	T F	h BTU/lb	m kpph	UA BTU/s-F	Q BTU/s	A sq.ft
tm rtrn	17.72	250.00	218.49	37.350			
akeup	17.72	80.00	48.02	117.431			
W supl	17.72	121.24	89.16	154.781			
TE				154.781	7	1235	2600
rom LTE	17.20	150.00	117.88	154.781			
PB				11.263	25	3020	8900
ater bleed				23.390			
td. FW	17.20	220.00	188.13	131.391			
PFW	731.58	220.57	190.85	37.461			
PE1				37.461	32	2004	11856
6	710.27	405.95	383.39	0.000			
PE2				37.461	3	581	907
7	699.93	456.00	439.21	0.000			
PE3				37.461	1	290	515
8	689.58	481.03	467.12	0.000			
lwdn	689.58	501.03	489.43	0.371			
PB				37.090	36	7577	12210
tm addn	689.58	501.03	1202.37	23.390			
9	689.58	501.03	1202.37	0.000			
PS1				60.480	0	0	0
0	689.58	501.03	1202.37	0.000			
P				60.480	8	1523	3269
11	669.50	606.00	1293.02	60.480			
P procs	669.50	606.00	1293.02	60.480			
	650.00	600.00	1290.71	60.480			
PFW	273.18	220.21	189.11	93.930			
PE				93.930	56	4484	20817
1	265.23	385.95	360.96	0.000			
lwdn	265.23	405.95	381.70	0.930			
PB				93.000	232	21751	79642
2	265.23	405.95	1202.73	0.000			
PS1				93.000	4	918	1746
3	257.50	456.00	1238.28	93.000			
P procs	257.50	456.00	1238.28	93.000			
	250.00	450.00	1235.46	93.000			

Boiler feedpumps = 63.3 kWe

STEAM CYCLE HEAT BALANCE

Energy in = 124330 BTU/s

GT Exhaust Sensible	GT Exhaust Latent	Duct Burner Fuel HHV	Makeup+Proc Return	Pump Work	External Steam
70312	42320	0	3833	54	7812

Energy out = 124331 BTU/s

Heat Radiated	Blow down	Mech/Elec Losses	Stack Sens.	Stack Latent	Condnsr C.W.	Process Steam	GT Injec.	Proc. Water	Electric Output
944	149	0	26095	42320	0	17090	36509	1222	0

Zero enthalpy: dry gases & liquid water @ 32 F (273.15 K)
Heat Balance Error = In - Out =-.367 BTU/s = 0 %

HRSG GAS-SIDE PROFILE

	Tg F	Tw F HP/IP	DT F HP/IP	Qg/UA F	DELTA P inch H2O	UA BTU/s-F	Qg BTU/s	Vg ft/s	Tube Rows	Lngth ft
1	767.2	606.0	161.2							
				202.7	0.3	7.6	1538.1	71.6	0.7	0.3
	751.8	501.0	250.8							
2	751.8	501.0	250.8							
				209.7	0.9	36.5	7653.2	68.9	2.6	1.1
	674.4	501.0	173.4							
3	674.4	481.0	193.4							
				204.2	0.0	1.4	293.4	66.6	0.1	0.0
	671.4	456.0	215.4							
4	671.4	456.0	215.4							
4	671.4	456.0	215.4							
				232.3	0.2	6.5	1514.2	66.0	0.6	0.2
	656.0	406.0	250.1							
	656.0	406.0	250.1							
5	656.0	406.0	250.1							
				94.6	5.2	232.3	21968.5	58.9	16.9	7.0
	428.5	406.0	22.5							
	428.5	406.0	22.5							
	428.5	386.0	42.5							
				75.1	1.8	87.2	6552.5	50.2	6.9	2.9
	359.3	220.6	138.7							
	359.3	220.2	139.1							
7	359.3	220.0	139.3							
				122.4	0.4	24.9	3050.6	47.2	1.9	0.8
	326.9	220.0	106.9							
8	326.9	150.0	176.9							
				184.5	0.1	6.8	1247.3	45.8	0.6	0.2
	313.6	121.2	192.4							

Duct burner fuel= 0 kpph
Gas mole composition: 65.7 %N2+Ar 11.9 %O2 4.75 %CO2 17.7 %H2O .001 %SO2
Flue gas dew point = 136 F M.W.= 27.5

HRSG TOTALS	Economisers	Evaporators	Superheaters	TOTAL
Q BTU/s	8594	32349	2441	43384
UA BTU/s-F	98	294	12	403
A sq.ft	36695	100752	5015	142462

Bare surface= 8287 fin surface= 134174 sq.ft. Averaged fin eff.= .686
HRSG frontal area = 312 sq.ft. Gas mass flux= 7.96 kpph/sq.ft
HRSG length = 12.6 ft, 30.2 tube rows, 749 ft of tubes per row.
2 in dia. tubes with serrated fins, staggered arrangement.
Fin thickness/dia.= .03 , height/dia.= .4 , spacing/dia.= .07
Tube transverse pitch/dia.= 2.5 , row longitudinal pitch/dia.= 2.5

GE LM 5000 ST120

Water cooling

air to coal ratio	2.41	air pressure	478	Cp air	0.248
water coal ratio	0.260	air temperature	1052	Cp water	1.000
air to water ratio	9.27	water temperature	80	Cp steam	0.455

	lb	wt %	mols	mol %	partial pressure
air	9.27	90.26%	0.32	85.31%	407.76
water	1.00	9.74%	0.06	14.69%	70.24

sat temp 302

Temperature of combined stream entering boost compressor

469.80 F sat pressure 514 psia Rel. Hum. 13.67%

Temperature of stream exiting compressor (85% comp eff)

Tf = Ti + (Ti/n*((Pf/Pi)^((k-1)/k)-1))

where
Ti - inlet temperature - 469.80 F - 929.80 R
n - efficiency - 85.00%
k - ratio of specific heat @ constant pressure to specific
to specific heat @ constant volume 1.384
Pf - final pressure 550 psia
Pi - initial pressure 478 psia

Tf = 513.22 F

	A	B	C	D	E	F	G	H	I	J	K	L	M	N	O
1	**Standardized IGCC Gasifier Cogen Application**													**Reference Coal -**	
2	**Mass & Energy Balance**					**GE LM 5000 ST120**				**Full Load**				**Predicted Gasifier Out**	
3	Stream No.			1		2		3		4				5	
4	Identification			AR Coal		Coal Fines		Sized Coal		Comp Air @	2.41 A/C			Water @	0.26
5	From			Illinois #6		Sizer @	30%	Combined Streams		Aux Compr	&/or Booster Compr			Cooling Water	H2O/
6	To			Sizer		Briquetting		Gasifier			Gasifier			Gasifier	Coal
7	Gas	Mol Wt		lb/hr	wt %	lb/hr	wt %	lb/hr	wt %	lb/hr	lb/mol	wt %	mol %	lb/hr	
8															
9	CO	28.010								0	0.00	0.00	0.00		
10	H2	2.016								0	0.00	0.00	0.00		
11	CO2	44.010								51	0.01	0.05	0.03		
12	H2O	18.015								678	0.18	0.64	1.02	11,513	
13	CH4	16.042								0	0.00	0.00	0.00		
14	C2H6	30.068								0	0.00	0.00	0.00		
15	H2S	34.076								0	0.00	0.00	0.00		
16	COS	60.070								0	0.00	0.00	0.00		
17	N2	28.013								80,063	21.65	75.03	77.28		
18	Ar	39.948								1,402	0.38	1.31	0.95		
19	HCl	36.461								0	0.00	0.00	0.00		
20	HCN	27.026								0	0.00	0.00	0.00		
21	NH3	17.030								0	0.00	0.00	0.00		
22	CS2	76.131								0	0.00	0.00	0.00		
23	SO2	64.059								0	0.00	0.00	0.00		
24	NO	30.006								0	0.00	0.00	0.00		
25	O2	31.999								24,521	6.63	22.98	20.72		
26	NaCl	58.497								0	0.00	0.00	0.00		
27	KCl	74.596								0	0.00	0.00	0.00		
28	Total Gas (lb/hr)									106,715	28.86	100.00	100.00	11,513	
29															
30	Volumetric Flow Rates			(STP 14.7 psia, 59F)											
31	(acfm)									1,072					
32	(scfm)									23,350					
33															
34	Heat (BTU/lb)													1289	
35	Cp (BTU/lb F)									0.248					
36	HHV (BTU/lb)			10,776		10,776		10,776		0					
37	LHV (BTU/lb)			10,239		10,239		10,260		0					
38	Sensible Heat above														
39	59 F Btu/lb steam			0		0		0		113					
40	Latent Heat of														
41	Water Btu/lb steam									7					
42															
43	Chemical Heat			453.39		136.02		472.52		0.00					
44	(LHV) MBtu/hr														
45	Sensible Heat			0.00		0.00		0.00		12.01					
46	above 59 F MBtu/hr														
47	Latent Heat			23.78		7.13		23.78		0.71					
48	of Water MBtu/hr														
49	TotalHeat(MBtu/hr)			477.16		143.15		496.30		12.72				14.84	
50				Number of Gasifiers for 85% Plant Availability @90% Gasifier Availability,										600	psia
51															
52	C	12.011		26,617	60.11%	7,985	60.11%	27,991	60.78%		14				
53	H	1.008		1,846	4.17%	554	4.17%	1,846	4.01%		75			1,279	
54	O	16.000		3,352	7.57%	1,006	7.57%	3,352	7.28%		25,161			10,234	
55	N	14.007		523	1.18%	157	1.18%	523	1.13%		80,063			11,513	Total
56	S	32.060		1,275	2.88%	383	2.88%	1,275	2.77%		105,313	Total			
57	CL2	35.500		0	0.00%	0	0.00%	0	0.00%		-				
58	H2O	18.016		6,243	14.10%	1,873	14.10%	6,243	13.56%						
59	ZnFe2O4														
60	ZnS														
61	FeS														
62	Fe2O3														
63	ZnO														
64	ASH			4,428	10.00%	1,328	10.00%	4,825	10.48%						
65	Total Solids			44,280	100.01%	13,284	100.01%	46,056	100.00%						
66	Total Flow (pph)			44,280 *		13,284		46,056		106,715				11,513	
67															
68	Total Flow (pps)			12.30		3.69		12.79		29.64				3.20	
69	Pressure (psia)			14.7		14.7		14.7		600 *				600 *	
70	Temperature (F)			59		59		59		513 *				513 *	

O	P	Q	R	S	T	U	V	W	X	Y	Z	AA	AB	AC	AD
	Illinois #6								J-1538		DE-AC21-89MC26291				1
Output			10/16/90				Revision 7								2
	6	Uncomb	7		8		9				10	55 scf/lb of coal			3
0.26	Ash	Carbon	Fines (Char)		Tar		Dust(per RTI dia)		Miscellaneous		Hot Gas with tars				4
H2O/	Gasifier	2.69%	Gasifier @	4.00%	Gasifier @	6.00%	Final Cyclone		Gasifier Heat		Gasifier	N2 in coal			5
Coal	Ash Silo		Briquetting		HGCU		Reclaim		Losses		HGCU	to NH3 Conv		90.1%	6
	lb/hr	wt %	lb/hr	wt %	lb/hr	wt %	lb/hr	wt %			lb/hr	lb/mol	wt %	mol %	7
															8
											41,324	6.39	26.26	22.82	9
											1,859	0.29	1.18	14.26	10
											18,493	2.86	11.75	6.50	11
											8,035	1.24	5.11	6.90	12
											3,376	0.52	2.15	3.26	13
											669	0.10	0.43	0.34	14
											1,162	0.18	0.74	0.53	15
											342	0.05	0.22	0.09	16
											80,115	12.39	50.91	44.24	17
											1,402	0.22	0.89	0.54	18
											0	0.00	0.00	0.00	19
											55	0.01	0.03	0.03	20
											537	0.08	0.34	0.49	21
											0	0.00	0.00	0.00	22
											0	0.00	0.00	0.00	23
											0	0.00	0.00	0.00	24
											0	0.00	0.00	0.00	25
											0	0.00	0.00	0.00	26
											0	0.00	0.00	0.00	27
											157,368	24.34	100.00	100.00	28
															29
											157,368				30
											3,300				31
											40,834				32
															33
															34
	0.260		0.260		0.26		0.260				0.329				35
	0		10,936		17,329		0				2,588.8				36
	0		10,936		16,571		0				2,375.0				37
															38
	154		276		276		323				349				39
															40
	0		0		749		0				214				41
															42
	10.38		19.37		44.03		0.00				373.74				43
															44
	0.79		0.49		0.73		0.07		25.4 Water/steam		54.87				45
									jacket						46
	0.00		0.00		1.99		0.00		5.9 Traversing		33.66	Gas HHV=	189	Btu/scf	47
									Stirrer			Estimated=	633	Btu/lb	48
	11.17		19.86		46.75		0.07		31.3 Total		462.27	Calculated=	633	Btu/lb	49
ia & 17 tph (typical) Coal each:				1.8		Unit Output (MWn)			46.2 MWn			BulkGas=	10.13%	H2O	50
												Calc Comb Temp (F)		2210	51
	716	13.92	1,374	77.60%	2,338	88.00%					25,915	25,914	0.00%		52
			0	0.00%	213	8.00%					3,895	3,895	0.00%		53
			0	0.00%	53	2.00%					44,296	44,296	0.00%		54
tal			0	0.00%	27	1.00%					80,586	80,585	0.00%		55
	0	0.00	0	0.00%	27	1.00%					1,275	1,276	-0.02%		56
			0	0.00%						Sub-Totals	155,966	155,966	0.00%		57
			0	0.00%							Sum of	Sum of Gas	Mass		58
							201	90			Streams	Constituents	Unbalance		59
							4	2			balance check				60
							13	6			FERC Cycle Efficiency(g)= 47.93%				61
							0	0			FERC Cycle Efficiency(n)= 45.92%				62
							4	2							63
	4,428	86.08	397	22.40%			0	0							64
	5,144	100	1,771	100.00%	2,657	100.00%	223	100							65
	5,144		1,771		2,657		223				157,368				66
															67
	1.43		0.49		0.74		0.06				43.71				68
	14.7		600 *		600 *		554				554				69
	650		1120		1120		1200				1120				70

	AE	AF	AG	AH	AI	AJ	AK	AL	AM	AN	AO	AP	AQ	AR
1	**Standardized IGCC Gasifier Cogen Application**											**Reference Coal -**		**Il**
2	**Mass & Energy Balance**				**GE LM 5000 ST120**							**Predicted Gasifier Ou**		
3	**Stream No.**				**11**				**12**		**13**	**14**		
4	**Identification**				**Air**				**Bleed Air**		**Bleed Air**	**Compressor Discharge**		
5	**From**				**Atmosphere**				**Compressor**		**for**	**Compressor**		
6	**To**				**Gas Turbine Compressor**				**Booster Compressor Cooler**		**Coolant**	**Combustor**		
7	**Gas**	**Mol Wt**	**lb/hr**	**lb/mol**	**wt %**	**mol %**	**lb/hr**	**lb/mol**	**wt %**	**mol %**	**lb/hr**	**lb/hr**	**lb/mol**	**wt %**
8														
9	CO	28.010	0	0.00	0.00	0.00	0	0.00	0.00	0.00	0	0	0.00	0.00
10	H2	2.016	0	0.00	0.00	0.00	0	0.00	0.00	0.00	0	0	0.00	0.00
11	CO2	44.010	521	0.01	0.05	0.03	51	0.01	0.05	0.03	103	367	0.01	0.05
12	H2O	18.015	6,990	0.18	0.64	1.02	678	0.18	0.64	1.02	1,307	4,925	0.18	0.64
13	CH4	16.042	0	0.00	0.00	0.00	0	0.00	0.00	0.00	0	0	0.00	0.00
14	C2H6	30.068	0	0.00	0.00	0.00	0	0.00	0.00	0.00	0	0	0.00	0.00
15	H2S	34.076	0	0.00	0.00	0.00	0	0.00	0.00	0.00	0	0	0.00	0.00
16	COS	60.070	0	0.00	0.00	0.00	0	0.00	0.00	0.00	0	0	0.00	0.00
17	N2	28.013	824,860	21.65	75.03	77.28	80,063	21.65	75.03	77.28	163,659	581,137	21.65	75.03
18	Ar	39.948	14,441	0.38	1.31	0.95	1,402	0.38	1.31	0.95	2,865	10,174	0.38	1.31
19	HCl	36.461	0	0.00	0.00	0.00	0	0.00	0.00	0.00	0	0	0.00	0.00
20	HCN	27.026	0	0.00	0.00	0.00	0	0.00	0.00	0.00	0	0	0.00	0.00
21	NH3	17.030	0	0.00	0.00	0.00	0	0.00	0.00	0.00	0	0	0.00	0.00
22	CS2	76.131	0	0.00	0.00	0.00	0	0.00	0.00	0.00	0	0	0.00	0.00
23	SO2	64.059	0	0.00	0.00	0.00	0	0.00	0.00	0.00	0	0	0.00	0.00
24	NO	30.006	0	0.00	0.00	0.00	0	0.00	0.00	0.00	0	0	0.00	0.00
25	O2	31.999	252,628	6.63	22.98	20.72	24,521	6.63	22.98	20.72	50,124	177,984	6.63	22.98
26	NaCl	58.497	0	0.00	0.00	0.00	0	0.00	0.00	0.00	0	0	0.00	0.00
27	KCl	74.596	0	0.00	0.00	0.00	0	0.00	0.00	0.00	0	0	0.00	0.00
28	**Total Gas (lb/hr)**		1,099,440	28.86	100.00	100.00	106,715	28.86	100.00	100.00	218,138	774,587	28.86	100.00
29														
30	**Volumetric Flow Rates (STP 14.7 psia, 59F)**													
31	**(acfm)**		240,563				2,089					15,163		
32	**(scfm)**		240,563				23,350				48,072	169,483		
33														
34	**hgAdiabHeat(BTU/lb)**													
35	**Cp (BTU/lb F)**		0.240				0.265					0.265		
36	**HHV (BTU/lb)**		0.0				0.0					0.0		
37	**LHV (BTU/lb)**		0.0				0.0					0.0		
38	**Sensible Heat**													
39	**above 59 F Btu/lb**		0				264					264		
40	**Latent Heat**													
41	**of Water Btu/lb**		7				7					7		
42														
43	**Chemical Heat**		0.00				0.00					0.00		
44	**(LHV) MBtu/hr**													
45	**Sensible Heat**		0.00				28.12					204.11		
46	**above 59 F MBtu/hr**													
47	**Latent Heat**		7.27				0.71					5.12		
48	**of Water MBtu/hr**													
49	**TotalHeat(MBtu/hr)**		7.27				28.83					209.23		
50												**Parasitic Load**		**2.81 M**
51														
52	C	12.011		142				14			28		100	100
53	H	1.008		777				75			154		547	547
54	O	16.000		259,220				25,161			51,432		182,628	182,628
55	N	14.007		824,860				80,063			163,659		581,137	581,137
56	S	32.060		0				0			0		0	0
57	CL2	35.500		1,084,999	sub-totals			105,313	sub-totals		215,273	sub-totals	764,413	764,413
58	H2O	18.016												balance check
59	ZnFe2O4													
60	ZnS													
61	FeS													
62	Fe2O3													
63	ZnO													
64	ASH													
65	**Total Solids**													
66	**Total Flow (pph)**		1,099,440				106,715				218,138	774,587		
67														
68	**Total Flow (pps)**		305.40 *				29.64			*	60.59	215.16		
69	**Pressure (psia)**		14.7 *				479 *					479		
70	**Temperature (F)**		59 *				1052 *					1052		

AS	AT	AU	AV	AW	AX	AY	AZ	BA	BB	BC	BD	BE
Illinois #6						J-1538		DE-AC21-89MC26291				1
Output					Revision 7						10/16/90	2
		15			15 a	16					16a	3
harge		Fuel		%H2S	HP Steam	Inlet Gas		Thrml NO (ppmvd)		25	Lp Steam	4
		HGCU		Removed	HRSG	GT Combustor		*Rich/Lean Red. F		85%	HRSG	5
		GT Combustor		99.0%	GT Combustor	GT Expander					LP Turbine	6
% mol %	lb/hr	mol/hr	wt %	mol %	lb/hr	lb/hr	lb/mol	mols	wt %	mol%	lb/hr	7
												8
0.00 0.00	41,324	1,475	26.38	22.84		0	0.00	0.00	0.00	0.00		9
0.00 0.00	1,836	911	1.17	14.10		0	0.00	0.00	0.00	0.00		10
0.05 0.03	18,493	420	11.80	6.51		95,138	2.68	0.0022	9.59	6.09		11
0.64 1.02	8,845	491	5.65	7.60	60,480	100,454	2.83	0.01	10.13	15.71	43,200	12
0.00 0.00	3,376	210	2.16	3.26		0	0.00	0.00	0.00	0.00		13
0.00 0.00	669	22	0.43	0.34		0	0.00	0.00	0.00	0.00		14
0.00 0.00	12	0	0.01	0.01		0	0.00	0.00	0.00	0.00		15
0.00 0.00	3	0	0.00	0.00		0	0.00	0.00	0.00	0.00		16
75.03 77.28	80,115	2,860	51.14	44.28		661,625	18.64	0.0238	66.71	66.55		17
1.31 0.95	1,402	35	0.89	0.54		11,576	0.33	0.00	1.17	0.82		18
0.00 0.00	0	0	0.00	0.00		0	0.00	0.00	0.00	0.00		19
0.00 0.00	55	2	0.03	0.03		0	0.00	0.00	0.00	0.00		20
0.00 0.00	537	32	0.34	0.49		0	0.00	0.00	0.00	0.00		21
0.00 0.00	0	0	0.00	0.00		0	0.00	0.00	0.00	0.00		22
0.00 0.00	0	0	0.00	0.00		25	0.0007	0.0000	0.0026	0.0011		23
0.00 0.00	0	0	0.00	0.00		209	0.0059	0.0000	0.0211	0.0196		24
22.98 20.72	0	0	0.00	0.00		122,708	3.46	0.0039	12.37	10.81		25
0.00 0.00	0	0	0.00	0.00		0	0.00	0.00	0.00	0.00		26
0.00 0.00	0	0	0.00	0.00		0	0.00	0.00	0.00	0.00		27
100.00 100.00	156,667	6,459	100.00	100.00	60,480	991,734	27.95	0.0358	100.00	100.00	43,200	28
						991,735 bal ck						29
												30
	3,421					36,860						31
	40,780					224,061						32
												33
					1290.7						1235.5	34
	0.334					0.301						35
	2,548.9					0.0						36
	2,330.0					0.0						37
												38
	375					646						39
												40
	219					105						41
												42
	365.04					0.00						43
												44
	58.67					640.73						45
												46
	34.29					104.47						47
												48
	458.00				78.06	745.21	745.29	bal chk			53.37	49
2.81 MWg				Combustion Turbine Output		48.981 MWg						50
												51
100 0.00%		25,847				25,947	25,947	0.00%				52
547 0.00%		3,894			6,720	11,162	11,162	0.00%			4,800	53
92,608 0.00%		44,927			53,760	281,315	281,316	0.00%			38,400	54
31,137 0.00%		80,585			60,480	661,723	661,723	0.00%			43,200	55
0 0.00%		13				13	13	0.10%				56
54,413 0.00%		155,266	sub-total			980,159	980,160	0.00%	sub-total			57
us check								balance check				58
												59
												60
												61
												62
												63
												64
												65
	156,667				60,480	991,734					43,200	66
												67
	43.52				16.80	275.48					12.00	68
	553.67				600	460 *					250	69
	1180				650	2,209 *					450	70

	BF	BG	BH	BI	BJ	BK	BL	BM	BN	BO	BP	BQ	BR	BS
1	**Standardized IGCC Gasifier Cogen Application**								**Reference Coal -**		**Illinois #6**			
2	**Mass & Energy Balance**			**GE LM 5000 ST120**					**Predicted Gasifier Output**					
3	Stream No.			17				18				19	Thrml NO (ppmvd)	25
4	Identification		Exhaust Gas				Fuel for Supplementary Firing				Flue Gas		SCR Red F	80%
5	From		Gas Turbine					Gasifier			HRSG		R/L Red F	85%
6	To							HRSG			Stack		NOx Reburn F	0%
7	Gas	Mol Wt	lb/hr	mole/hr	wt %	mol %	lb/hr	lb/mol	wt %	mol %	lb/hr	mole/hr	wt %	mol %
8														
9	CO	28.010	0	0.00	0.00	0.00	0	6.39	26.26	22.82	0	0.00	0.00	0.00
10	H2	2.016	0	0.00	0.00	0.00	0	0.29	1.18	14.26	0	0.00	0.00	0.00
11	CO2	44.010	95,241	2164.08	7.60	4.76	0	2.86	11.75	6.50	95,241	2164.08	7.60	4.76
12	H2O	18.015	145,041	8051.14	11.57	17.72	0	1.24	5.11	6.90	145,041	8051.14	11.58	17.72
13	CH4	16.042	0	0.00	0.00	0.00	0	0.52	2.15	3.26	0	0.00	0.00	0.00
14	C2H6	30.068	0	0.00	0.00	0.00	0	0.10	0.43	0.34	0	0.00	0.00	0.00
15	H2S	34.076	0	0.00	0.00	0.00	0	0.18	0.74	0.53	0	0.00	0.00	0.00
16	COS	60.070	0	0.00	0.00	0.00	0	0.05	0.22	0.09	0	0.00	0.00	0.00
17	N2	28.013	825,285	29460.78	65.86	64.83	0	12.39	50.91	44.24	825,285	29460.78	65.87	64.83
18	Ar	39.948	14,441	361.49	1.15	0.80	0	0.22	0.89	0.54	14,441	361.49	1.15	0.80
19	HCl	36.461	0	0.00	0.00	0.00	0	0.00	0.00	0.00	0	0.00	0.00	0.00
20	HCN	27.026	0	0.00	0.00	0.00	0	0.01	0.03	0.03	0	0.00	0.00	0.00
21	NH3	17.030	0	0.00	0.00	0.00	0	0.08	0.34	0.49	0	0.00	0.00	0.00
22	CS2	76.131	0	0.00	0.00	0.00	0	0.00	0.00	0.00	0	0.00	0.00	0.00
23	SO2	64.059	25	0.40	0.00	0.00	0	0.00	0.00	0.00	25	0.40	0.00	0.00
24	NO	30.006	209	6.97	0.02	0.02	0	0.00	0.00	0.00	42	1.39	0.00	0.00
25	O2	31.999	172,831	5401.15	13.79	11.88	0	0.00	0.00	0.00	172,831	5401.15	13.79	11.89
26	NaCl	58.497	0	0.00	0.00	0.00	0	0.00	0.00	0.00	0	0.00	0.00	0.00
27	KCl	74.596	0	0.00	0.00	0.00	0	0.00	0.00	0.00	0	0.00	0.00	0.00
28	Total Gas (lb/hr)		1,253,073	45446.00	100.00	100.00	0	24.34	100.00	100.00	1,252,905	45440.43	100.00	100.00
29			1,253,074	bal ck							1,252,907	bal chk		
30	Volumetric Flow Rates (STP 14.7 psia, 59F)													
31	(acfm)		661,222				0				427,857			
32	(scfm)		286,932				0				286,897			
33														
34	Heat (BTU/lb)													
35	Cp (BTU/lb F)		0.284				0.334				0.266			
36	HHV (BTU/lb)		0.0				2548.9				0.0			
37	LHV (BTU/lb)		0				2330.0				0			
38	Sensible Heat above													
39	59 F Btu/lb steam		202				0				68			
40	Latent Heat of													
41	Water Btu/lb steam		120				0				120			
42														
43	Chemical Heat		0.00				0.00				0.00			
44	(LHV) MBtu/hr													
45	Sensible Heat		253.38				0.00				85.01			
46	above 59 F MBtu/hr													
47	Latent Heat		150.84				0.00				150.84			
48	of Water MBtu/hr													
49	TotalHeat(MBtu/hr)		404.22				0.00				235.85			
50			1.14 Turbine Compressor Surge Margin											
51														
52	C	12.011	25,975	25,975	0.00%			0			25,975	25,975	0.00%	
53	H	1.008	16,116	16,116	0.00%			0			16,116	16,116	0.00%	
54	O	16.000	371,147	371,147	0.00%			0			371,058	371,058	0.00%	
55	N	14.007	825,382	825,382	0.00%			0			825,304	825,304	0.00%	
56	S	32.060	13	13	0.00%			0			13	13	0.00%	
57	CL2	35.500	1,238,633	1,238,633	0.00%	sub-total		0	sub-total		1,238,466	1,238,466	0.00%	sub-total
58	H?O	18.016			balance check									
59	ZnFe2O4													
60	ZnS													
61	FeS													
62	Fe2O3													
63	ZnO													
64	ASH													
65	Total Solids													
66	Total Flow (pph)		1,253,073				0				1,253,073			
67														
68	Total Flow (pps)		348.08				0 *				348.08			
69	Pressure (psia)		15.13				553.67				14.7			
70	Temperature (F)		771 *				1180				314 *			

	BT	BU	BV	BW	BX
	J-1538	DE-AC21-89MC26291			1
	Revision 7		10/16/90		2
	20	21	22	23	3
%	Superheated Steam	Low Pressure Steam	Make Up Water	Sat. Steam	4
%	HRSG	HRSG	WaterTreatment	Gasifier	5
b	Gas Turbine	Gas Turbine & Process	HRSG	HRSG	6
%	lb/hr	lb/hr	lb/hr	lb/hr	7
					8
0.00					9
0.00					10
4.76					11
17.72					12
0.00					13
0.00					14
0.00					15
0.00					16
14.83					17
0.80					18
0.00					19
0.00					20
0.00					21
0.00	Stack Emissions (lb/MBtu)				22
0.00	0.053				23
0.00	0.09				24
11.89					25
0.00					26
0.00					27
0.00					28
					29
					30
					31
					32
					33
	1290.71	1235.46	48	1203.7	34
					35
					36
					37
					38
					39
					40
					41
					42
					43
					44
					45
					46
					47
					48
	78.06	114.88	6.19	25.36	49
	HRSG Turbine Output		0.0	MWg	50
					51
					52
					53
					54
					55
					56
					57
					58
					59
					60
					61
					62
					63
					64
					65
	60,480	92,988	128,945	24,966	66
					67
	16.80	25.83	35.82	6.93	68
	600	250	15	600	69
	650	450	80	486.2	70

	BY	BZ	CA	CB	CC	CD	CE	CF	CG	CH	CI	CJ
1	**Standardized IGCC Gasifier Cogen Application**								**Reference Coal -**			**Illinois #6**
2	**Mass & Energy Balance**				**GE LM 5000 ST120**				**Predicted Gasifier Output**			
3	Stream No.		25		26					27		27a
4	Identification		Regen Recycle Loop		Conc SO2 Bleed					Elemental Sulfur		Elemental Sulfur
5	From		Recycle Blower		Regen Loop					Reoxx Process		DSRP
6	To		Regenerator		SRP					Marketable Byproduct		Marketable Byproduct
7	Gas	Mol Wt	lb/hr	wt%	lb/hr	lbs/mol	mols/hr	wt%	mol%	lb/hr	wt%	lb/hr
8												
9	CO	28.010			0	0.00	0.00	0.00	0.00			
10	H2	2.016			0	0.00	0.00	0.00	0.00			
11	CO2	44.010	64	0.05	5	0.02	0.12	0.05	0.04			
12	H2O	18.015	802	0.62	67	0.20	3.71	0.62	1.11			
13	CH4	16.042			0	0.00	0.00	0.00	0.00			
14	C2H6	30.068			0	0.00	0.00	0.00	0.00			
15	H2S	34.076			0	0.00	0.00	0.00	0.00			
16	COS	60.070			0	0.00	0.00	0.00	0.00			
17	N2	28.013	97,014	74.87	8,085	24.10	288.60	74.87	86.02			
18	Ar	39.948	0	0.00	0	0.00	0.00	0.00	0.00			
19	HCl	36.461			0	0.00	0.00	0.00	0.00			
20	HCN	27.026			0	0.00	0.00	0.00	0.00			
21	NH3	17.030			0	0.00	0.00	0.00	0.00			
22	CS2	76.131			0	0.00	0.00	0.00	0.00			
23	SO2	64.059	30,288	23.37	2,524	7.52	39.40	23.37	11.74			
24	NO	30.006			0	0.00	0.00	0.00	0.00			
25	O2	31.999	1,407	1.09	117	0.35	3.66	1.09	1.09			
26	NaCl	58.497			0	0.00	0.00	0.00	0.00			
27	KCl	74.596			0	0.00	0.00	0.00	0.00			
28	Total Gas (lb/hr)		129,576	100.00	10,798	32.19	335	100.00	100.00			
29												
30	Volumetric Flow Rates		(STP 14.7 psia, 59 F)									
31	(acfm)		4,555		359							
32	(scfm)		25,419		2,118							
33												
34	Heat (BTU/lb)											
35	Cp (BTU/lb F)		0.240		0.240					0.000		0.000
36	HHV (BTU/lb)											
37	LHV (BTU/lb)											
38	Sensible Heat above											
39	59 F Btu/lb steam											
40	Latent Heat of											
41	Water Btu/lb steam											
42												
43	Chemical Heat									5.02		5.02
44	(LHV) MBtu/hr											
45	Sensible Heat		41.70		3.22					0.00		0.00
46	above 59 F MBtu/hr											
47	Latent Heat		0.83		0.07					0.00		0.00
48	of Water MBtu/hr											
49	TotalHeat(MBtu/hr)		42.54		3.29					5.02		5.02
50												
51												
52	C	12.011										
53	H	1.008										
54	O	16.000										
55	N	14.007										
56	S	32.060								1,262		1,262
57	CL2	35.500										
58	H2O	18.016										
59	ZnFe2O4											
60	ZnS											
61	FeS											
62	Fe2O3											
63	ZnO											
64	ASH				0.00				0			
65	Total Solids											
66	Total Flow (pph)		129,576		10,798					1,262		1,262
67												
68	Total Flow (pps)		35.99		3.00					0.35		0.35
69	Pressure (psia)		294		294					15		15
70	Temperature (F)		1400		1300					284		190

CK	CL	CM	CN
J-1538	DE-AC21-89MC262		1
Revision 7		10/16/90	2
27b	28		3
Sulfur Dioxide	Ash		4
SO2 Recovery Unit	SO2 Reductor		5
Marketable Byproduct	Disposal		6
lb/hr	lb/hr	wt%	7
			8
			9
			10
			11
			12
			13
			14
			15
			16
			17
			18
			19
			20
			21
			22
			23
			24
			25
			26
			27
			28
			29
			30
			31
			32
			33
			34
0.000			35
			36
			37
			38
	154	0	39
			40
			41
			42
5.02	1.81	0	43
			44
0.00	0.00	0	45
			46
0.00	0.00	0	47
			48
5.02	1.81	0.4	49
			50
			51
	125	3	52
			53
			54
			55
1,262			56
			57
			58
			59
			60
			61
			62
			63
	4,428	97	64
	4,553	100	65
2,524	4,553	100	66
			67
0.70	1.26		68
100	15		69
59	284		70

100 MW Cogen Cycle
Westinghouse 501 D5

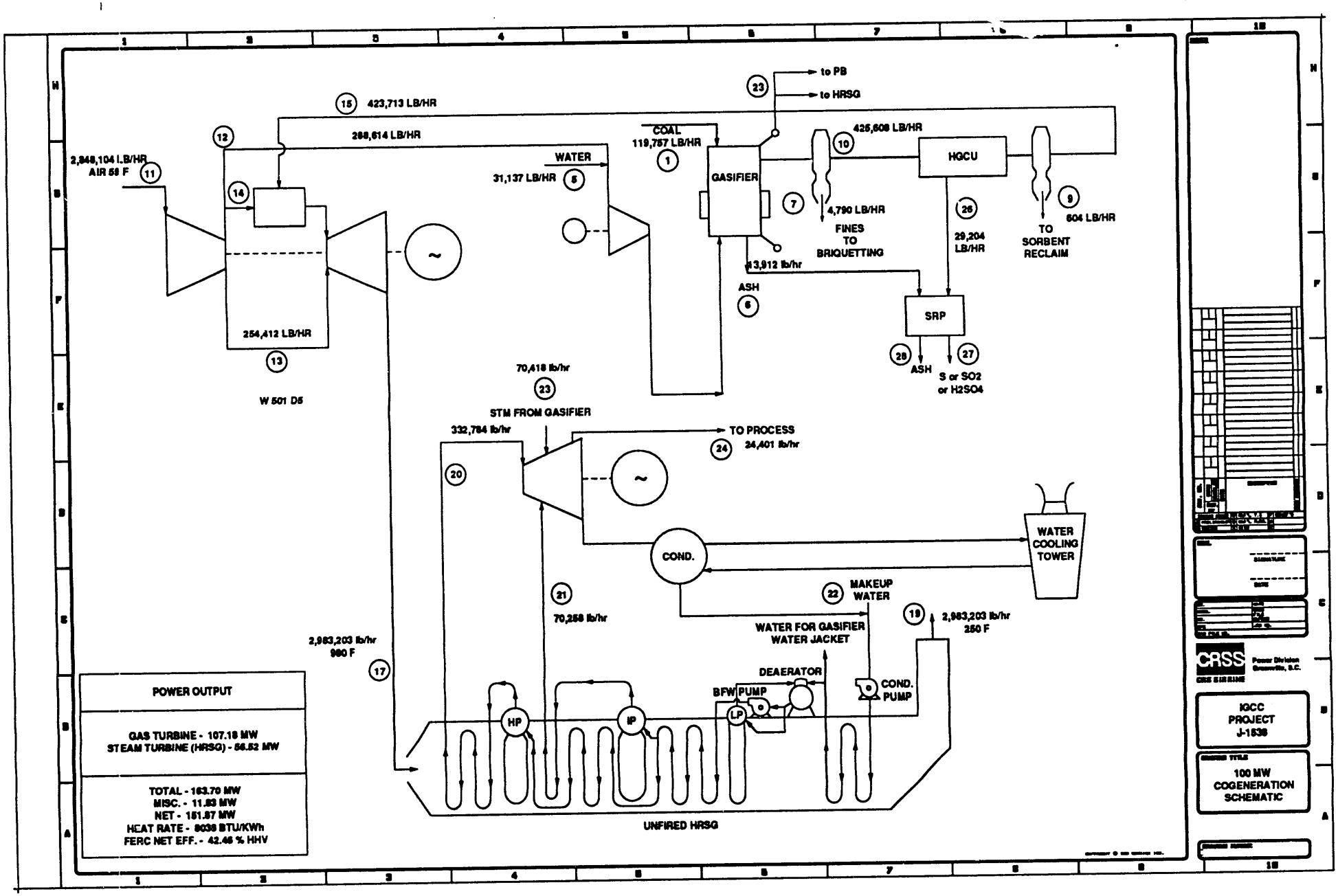
to PB
to HRSG
23
15 423,713 LB/HR
288,614 LB/HR
12
2,848,104 LB/HR
AIR 59 F
11
14
254,412 LB/HR
13
W 501 D5
WATER
31,137 LB/HR
5
COAL
119,757 LB/HR
1
GASIFIER
7
4,790 LB/HR
FINES
TO
BRIQUETTING
10
425,608 LB/HR
HGCU
26
29,204
LB/HR
9
604 LB/HR
TO
SORBENT
RECLAIM
13,912 lb/hr
ASH
6
SRP
28
ASH
27
S or SO2
or H2SO4
70,418 lb/hr
23
STM FROM GASIFIER
332,784 lb/hr
TO PROCESS
24
24,401 lb/hr
20
COND.
WATER
COOLING
TOWER
21
70,258 lb/hr
22
MAKEUP
WATER
WATER FOR GASIFIER
WATER JACKET
19
2,983,203 lb/hr
250 F
2,983,203 lb/hr
980 F
17
DEAERATOR
BFW PUMP
COND.
PUMP
HP
IP
LP
UNFIRED HRSG
POWER OUTPUT
GAS TURBINE - 107.18 MW
STEAM TURBINE (HRSG) - 56.52 MW
TOTAL - 163.70 MW
MISC. - 11.83 MW
NET - 151.87 MW
HEAT RATE - 8038 BTU/KWh
FERC NET EFF. - 42.46 % HHV
CRSS
Power Division
Greenville, S.C.
IGCC
PROJECT
J-1538
100 MW
COGENERATION
SCHEMATIC

IGCC 51 - 100 MW COGEN CYCLE
WESTINGHOUSE 501 D5

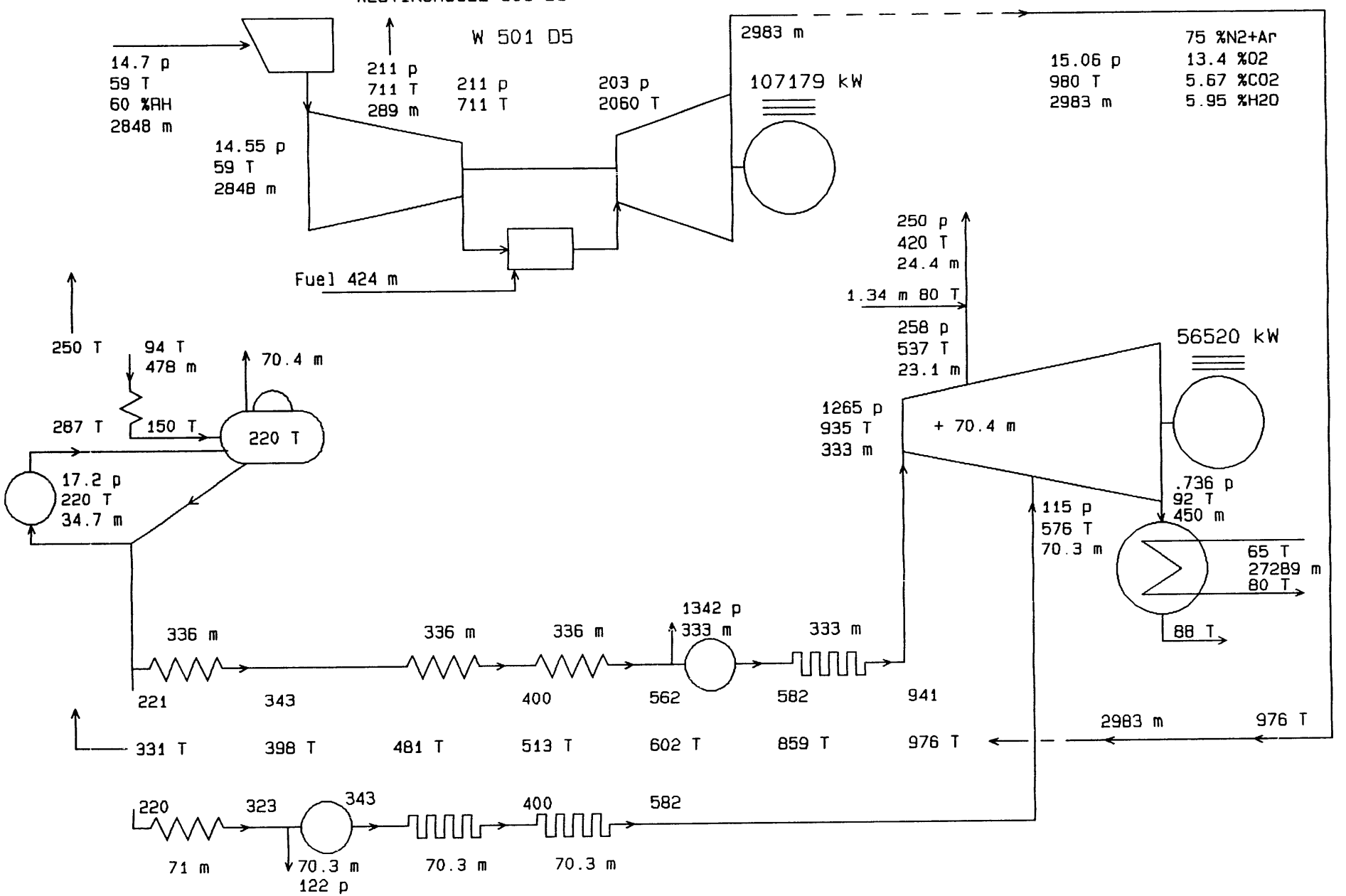

GTPRO 3.31 Michael Brown 10-15-1990 13: 12: 44
p psia, T F, m kpph

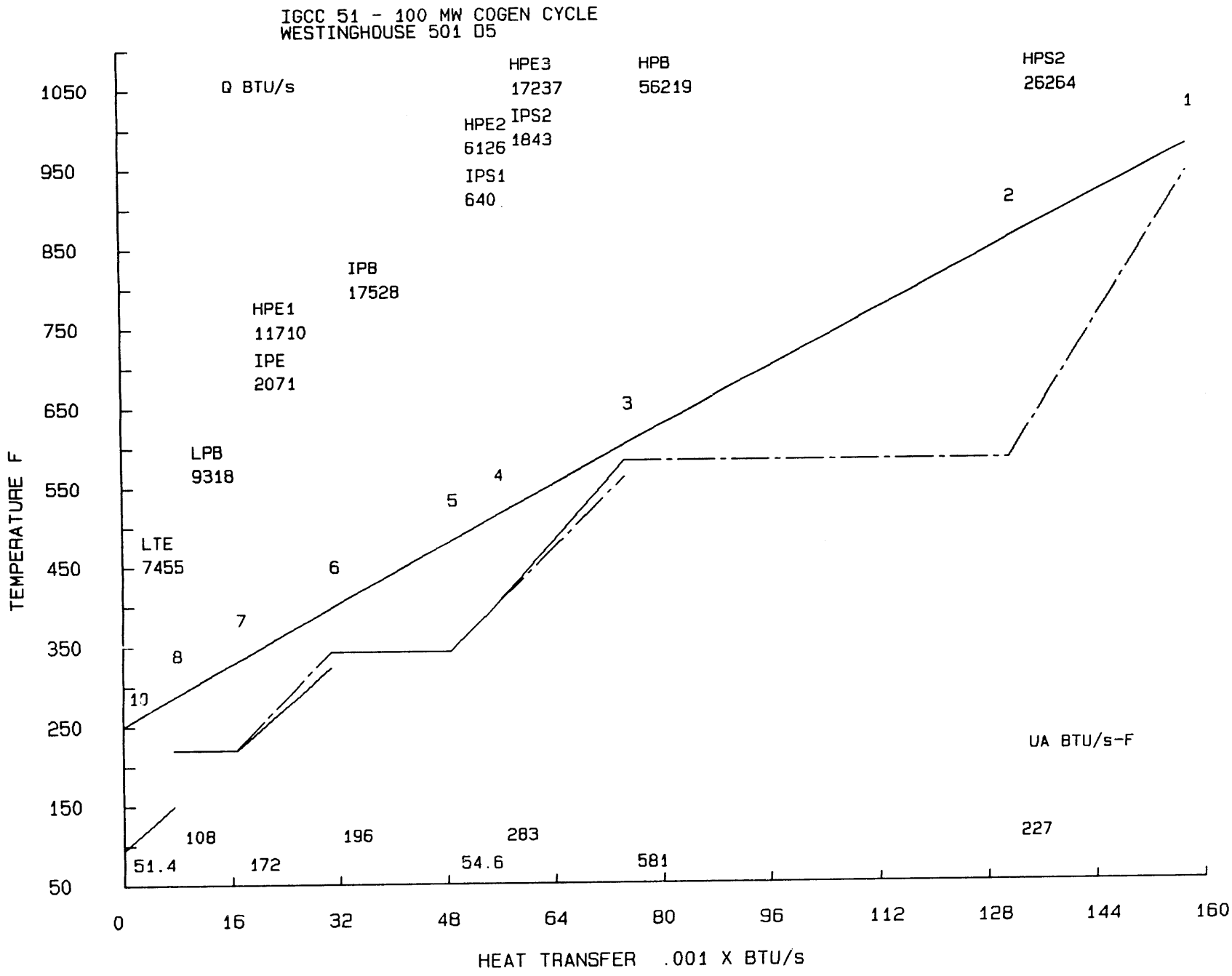

GTPRO 3.31 Michael Brown 10-15-1990 13: 12: 44

TPRO 3.31 Michael Brown 10-15-1990 13:12:15
3CC 51 - 100 MW COGEN CYCLE
ESTINGHOUSE 501 D5

ESTIMATED G.T. SITE PERFORMANCE

uel=Fuel G.T. @ 100 % rating, XIGV= 0
ite ambient conditions: 14.7 psia, 59 F, 60 % RH
nlet loss= 4 inch H2O, exhaust loss= 10 inch H2O
vap. inlet cooler to 0 % RH.

G.T. DEVIATION FROM NOMINAL, CLEAN ENGINE

ompressor inlet airflow % reduction = 0
ompressor efficiency reduction % = 0
urbine efficiency reduction % = 0
aximum firing temperature excess over base load = 0 F
ombustor % pressure loss (0 means nominal value) = 0
ombustor inefficiency + heat loss % (0 means nominal value) = 0
ooling air increase % (0 means nominal value) = 0
rocess air bleed location (0 means none) = 1
rocess air bleed % of inlet = 10.14

#	Model	PR	TIT F	TET F	Mair kpph	kWe	H.R.LHV BTU/kWh	Mex kpph	N2+Ar %	O2 %	CO2 %	H2O %
[illegible]	501 D5	14.5	2060	980	2848	107180	10688	2983	75.02	13.36	5.67	5.95

uel flow = 424 kpph
uel pressure reqd.= 285 psia, compressor power= 737 kWe
.T. auxillary power = 534 kWe.

ESTIMATED G.T. CYCLE

STREAM	TEMP. F	PRESS. psia	MASSFLOW kpph	M.W.	MOLE COMPOSITION % N2+Ar	O2	CO2	H2O
mbient air in	59	14.70	2848.11	28.75	78.22	20.74	0.03	1.01
ompr. inlet	59	14.55	2848.11	28.75	78.22	20.74	0.03	1.01
urbine coolant	misc.		254.40					
rocess air bld	711	211.27	288.80	28.75	78.22	20.74	0.03	1.01
ompr. disch.	711	211.27	2304.92	28.75	78.22	20.74	0.03	1.01
urbine inlet	2060	202.82	2728.63	28.87	74.72	12.67	6.20	6.41
urbine exhaust	980	15.06	2983.03	28.86	75.02	13.36	5.67	5.95

ompressor= 134299 Turbine= 243657 Mech. loss= 656 kW
urbine coolant= 8.93 % compr in
T specific power @ gen term= 37.6 kW per kpph
T efficiency @ gen term= 29.38 % HHV = 31.93 % LHV

GAS TURBINE/GENERATOR HEAT BALANCE

gy in = 356318 BTU/s

nlet air ensible	Inlet air Latent	Water Inj.	Steam Inj.	Fuel HHV
5209	5268	0	0	345842

nergy out = 358064 BTU/s

Incompl comb & carcass rad	GT Mech. Losses	Gearbox Loss	Generator Loss	Exhaust Sensible	Exhaust Latent	Electric Output	Proc Air
4168	417	0	1451	204011	32359	101593	14066

ero enthalpy: dry gases & liquid water @ 32 F (273.15 K)
leat Balance Error = In - Out =-1746 BTU/s =-.49 %

TPRO 3.31 Michael Brown 10-15-1990 13:12:22 Steam cycle p.1
GCC 51 - 100 MW COGEN CYCLE
ESTINGHOUSE 501 D5
y[illegible]: 6 Subtype: 2 Induction

	P psia	T F	h BTU/lb	m kpph	UA BTU/s-F	Q BTU/s	A sq.ft
nd rtrn	0.74	87.57	55.58	450.420			
tm rtrn	17.72	250.00	218.49	18.300			
akeup	17.72	80.00	48.02	10.131	(Includes 1.34	kpph for desup)	
W supl	17.72	93.69	61.68	477.506			
TE				477.506	51	7455	23714
rom LTE	17.20	150.00	117.88	477.506			
PB				34.747	108	9318	45953
ater bleed				70.420			
td. FW	17.20	220.00	188.13	407.086			
PFW	1423.77	221.13	193.48	336.128			
PE1				336.128	149	11710	66383
6	1382.30	342.54	318.89	0.000			
PE2				336.128	49	6126	21486
7	1362.17	400.10	384.50	0.000			
PE3				336.128	248	17237	106113
8	1342.04	562.08	569.12	0.000			
lwdn	1342.04	582.08	591.91	3.328			
PB				332.800	581	56219	227514
9	1342.04	582.08	1177.03	0.000			
PS1				332.800	0	0	0
[illegible]0	1342.04	582.08	1177.03	0.000			
P[illegible]				332.800	227	26264	112429
11	1302.95	941.00	1461.14	0.000			
nto HPT	1265.00	935.00	1458.99	332.800			
ef addn	350.00	630.40	1330.20	332.800			
PT addn	350.00	432.00	1204.98	70.420			
ft addn	350.00	590.01	1308.33	403.220			
PT bld.	257.50	536.63	1285.90	23.056			
asuperhtr				1.344			
PT proc	250.00	420.00	1214.85	24.400			
PT exit	115.00	389.92	1219.60	380.164			
PFW	125.66	220.09	188.55	70.959			
PE				70.959	23	2071	10142
1	122.00	322.54	293.59	0.000			
lwdn	122.00	342.54	314.10	0.703			
PB				70.256	196	17528	80738
2	122.00	342.54	1191.52	0.000			
PS1				70.256	5	640	2733
3	122.00	400.10	1224.32	0.000			
PS2				70.256	35	1843	18083
4	118.45	582.08	1318.77	0.000			
nto LPT	115.00	416.65	1234.60	450.420			
PT exit	0.74	91.57	964.36	450.420			

STEAM TURBINE

	No. of steps	Exit Quality	Efficiency(%)	Work (kW)
To HPT additn	4	1.157		
o HPT bleed	1	1.101		
To HPT exit	3	1.033	81.66	22597
o LPT exit	13	0.868	81.49	35672

ross power = 58268 kW. Mech/Elect losses = 1748 kW.
enerator output = 56520 kWe. ST auxiliaries = 396 kWe
oiler feedpumps = 598 kWe

CONDENSER

	p psia	T F	h BTU/lb	m kpph
PT exit	0.7365	91.57	964.36	450.42
aturation	0.7365	91.57		
ondensate well	0.7365	87.57	55.58	450.42
ooling water in		65.00		27288.88
ooling water out		80.00		27288.88

umber of passes= 1 UA= 6311 BTU/s-F Surface area = 30870 sq.ft
ubes: OD = 1 in Length= 38.6 ft number= 3057
ooling water: Velocity= 9 ft/s DP = 9.02 psia Pumps = 308 kWe.

STEAM CYCLE HEAT BALANCE

nergy in = 261693 BTU/s

GT Exhaust Sensible	GT Exhaust Latent	Duct Burner Fuel HHV	Makeup+Proc Return	Pump Work	External Steam
204011	32359	0	1246	507	23571

nergy out = 261694 BTU/s

Heat adiated	Blow down	Mech/Elec Losses	Stack Sens.	Stack Latent	Condnsr C.W.	Process Steam	GT Injec.	Proc. Water	Electric Output
2755	608	1657	45124	32359	113703	8234	0	3680	53574

e enthalpy: dry gases & liquid water @ 32 F (273.15 K)
e Balance Error = In - Out =-1.06 BTU/s = 0 %

HRSG GAS-SIDE PROFILE

	Tg F	Tw F HP/IP	DT F HP/IP	Qg/UA F	DELTA P inch H2O	UA BTU/s-F	Qg BTU/s	Vg ft/s	Tube Rows	Lngth ft
1	976.1	941.0	35.1							
				117.0	1.9	226.7	26526.7	57.0	7.4	3.1
	859.0	582.1	277.0							
2	859.0	582.1	277.0							
				97.8	3.2	580.7	56781.2	49.2	15.0	6.2
	602.1	582.1	20.0							
3	602.1	562.1	40.0							
3	602.1	582.1	20.0							
				68.1	1.5	282.8	19271.6	42.1	8.2	3.4
	512.8	400.1	112.7							
	512.8	400.1	112.7							
4	512.8	400.1	112.7							
4	512.8	400.1	112.7							
				125.0	0.3	54.6	6833.5	39.6	1.6	0.7
	480.8	342.5	138.3							
	480.8	342.5	138.3							
5	480.8	342.5	138.3							
				90.3	0.8	196.0	17702.8	37.2	5.3	2.2
	397.5	342.5	55.0							
6	397.5	342.5	55.0							
6	397.5	322.5	75.0							
				81.1	0.7	171.5	13918.0	34.1	5.0	2.1
	331.5	221.1	110.3							
	331.5	220.1	111.4							
7	331.5	220.0	111.5							
				87.1	0.4	108.1	9411.2	31.8	3.0	1.3
	286.5	220.0	66.5							
8	286.5	150.0	136.5							
				146.4	0.2	51.4	7529.3	30.1	1.6	0.6
	250.4	93.7	156.7							

uct burner fuel= 0 kpph
as mole composition: 75 %N2+Ar 13.4 %O2 5.67 %CO2 5.95 %H2O .002 %SO2
lue gas dew point = 97 F M.W.= 28.9

RSG TOTALS	Economisers	Evaporators	Superheaters	TOTAL
Q BTU/s	44598	83065	28747	156410
A BTU/s-F	521	885	267	1672
A sq.ft	227838	354204	133245	715287

rime surface= 41608 fin surface= 673678 sq.ft. Averaged fin eff.= .728
RSG frontal area = 1005 sq.ft. Gas mass flux= 5.89 kpph/sq.ft
RSG length = 19.6 ft, 47 tube rows, 2413 ft of tubes per row.
2 in dia. tubes with serrated fins, staggered arrangement.
in thickness/dia.= .03 , height/dia.= .4 , spacing/dia.= .07
ube transverse pitch/dia.= 2.5 , row longitudinal pitch/dia.= 2.5

W 501 D5

Water cooling

air to coal ratio	2.41	air pressure	211	Cp air	0.248
water coal ratio	0.147	air temperature	711	Cp water	1.000
air to water ratio	16.39	water temperature	80	Cp steam	0.455

	lb	wt %	mols	mol %	partial pressure
air	16.39	94.25%	0.57	91.13%	192.27
water	1.00	5.75%	0.06	8.87%	18.73

sat temp 224

Temperature of combined stream entering boost compressor

400.09 F sat pressure 247 psia Rel. Hum. 7.58%

Temperature of stream exiting compressor (85% comp eff)

Tf = Ti + (Ti/n*{(Pf/Pi)^((k-1)/k)-1})

where
Ti - inlet temperature - 400.09 F - 860.09 R
n - efficiency - 85.00%
k - ratio of specific heat @ constant pressure to specific
to specific heat @ constant volume 1.384
Pf - final pressure 350 psia
Pi - initial pressure 211 psia

Tf = 552.63 F

	A	B	C	D	E	F	G	H	I	J	K	L	M	N	O
1	Standardized IGCC Gasifier Cogen Application													Reference Coal -	
2	Mass & Energy Balance					W 501 D5			Plant		Full Load			Predicted Gasifier Out	
3	Stream No.			1		2		3			4			5	
4	Identification			AR Coal		Coal Fines		Sized Coal		Comp Air @	2.41 A/C			Water @	0.26
5	From			Illinois #6		Sizer @	30%	Combined Streams		Aux Compr	&/or Booster Compr			Cooling Water	H2O/
6	To			Sizer		Briquetting		Gasifier			Gasifier			Gasifier	Coal
7	Gas	Mol Wt		lb/hr	wt %	lb/hr	wt %	lb/hr	wt %	lb/hr	lb/mol	wt %	mol %	lb/hr	
8															
9	CO	28.010								0	0.00	0.00	0.00		
10	H2	2.016								0	0.00	0.00	0.00		
11	CO2	44.010								137	0.01	0.05	0.03		
12	H2O	18.015								1,835	0.18	0.64	1.02	31,137	
13	CH4	16.042								0	0.00	0.00	0.00		
14	C2H6	30.068								0	0.00	0.00	0.00		
15	H2S	34.076								0	0.00	0.00	0.00		
16	COS	60.070								0	0.00	0.00	0.00		
17	N2	28.013								216,534	21.65	75.03	77.28		
18	Ar	39.948								3,791	0.38	1.31	0.95		
19	HCl	36.461								0	0.00	0.00	0.00		
20	HCN	27.026								0	0.00	0.00	0.00		
21	NH3	17.030								0	0.00	0.00	0.00		
22	CS2	76.131								0	0.00	0.00	0.00		
23	SO2	64.059								0	0.00	0.00	0.00		
24	NO	30.006								0	0.00	0.00	0.00		
25	O2	31.999								66,317	6.63	22.98	20.72		
26	NaCl	58.497								0	0.00	0.00	0.00		
27	KCl	74.556								0	0.00	0.00	0.00		
28	Total Gas (lb/hr)									288,614	28.86	100.00	100.00	31,137	
29															
30	Volumetric Flow Rates (STP 14.7 psia, 59F)														
31	(acfm)									5,177					
32	(scfm)									63,150					
33															
34	Heat (BTU/lb)													1308	
35	Cp (BTU/lb F)									0.249					
36	HHV (BTU/lb)			10,776		10,776		10,776		0					
37	LHV (BTU/lb)			10,239		10,239		10,260		0					
38	Sensible Heat above														
39	59 F Btu/lb steam			0		0		0		123					
40	Latent Heat of														
41	Water Btu/lb steam									7					
42															
43	Chemical Heat			1226.20		367.86		1277.95		0.00					
44	(LHV) MBtu/hr														
45	Sensible Heat			0.00		0.00		0.00		35.53					
46	above 59 F MBtu/hr														
47	Latent Heat			64.30		19.29		64.30		1.91					
48	of Water MBtu/hr														
49	TotalHeat(MBtu/hr)			1290.50		387.15		1342.25		37.44				40.73	
50				Number of Gasifiers for 85% Plant Availability @90% Gasifier Availability,										350	psia
51															
52	C	12.011		71,986	60.11%	21,596	60.11%	75,703	60.78%		37				
53	H	1.008		4,994	4.17%	1,498	4.17%	4,994	4.01%		204			3,460	
54	O	16.000		9,066	7.57%	2,720	7.57%	9,066	7.28%		68,048			27,677	
55	N	14.007		1,413	1.18%	424	1.18%	1,413	1.13%		216,534			31,137	Total
56	S	32.060		3,449	2.88%	1,035	2.88%	3,449	2.77%		284,823	Total			
57	CL2	35.500		0	0.00%	0	0.00%	0	0.00%						
58	H2O	18.016		16,886	14.10%	5,066	14.10%	16,886	13.56%						
59	ZnFe2O4														
60	ZnS														
61	FeS														
62	Fe2O3														
63	ZnO														
64	ASH			11,976	10.00%	3,593	10.00%	13,049	10.48%						
65	Total Solids			119,757	100.01%	35,927	100.01%	124,559	100.00%						
66	Total Flow (pph)			119,757 *		35,927		124,559		288,614				31,137	
67															
68	Total Flow (pps)			33.27		9.98		34.60		80.17				8.65	
69	Pressure (psia)			14.7		14.7		14.7		350 *				350 *	
70	Temperature (F)			59		59		59		553 *				553 *	

Illinois #6 — J-1538 — DE-AC21-89MC26291

ler Output — 10/16/90 — Revision 7

	O	P	Q	R	S	T	U	V	W	X	Y	Z	AA	AB	AC	AD
		6	Uncomb	7		8		9				10	55 scf/lb of coal			
	0.26	Ash	Carbon	Fines (Char)		Tar		Dust(per RTI dia)		Miscellaneous		Hot Gas with Tars				
r	H2O/	Gasifier	2.69%	Gasifier @	4.00%	Gasifier @	6.00%	Final Cyclone		Gasifier Heat		Gasifier	N2 in coal			
	Coal	Ash Silo		Briquetting		HGCU		Reclaim		Losses		HGCU	to NH3 Conv		90.1%	
		lb/hr	wt %	lb/hr	wt %	lb/hr	wt %	lb/hr	wt %			lb/hr	lb/mol	wt %	mol %	
												111,763	6.39	26.26	22.82	
												5,028	0.29	1.18	14.26	
												50,015	2.86	11.75	6.50	
137												21,730	1.24	5.11	6.90	
												9,131	0.52	2.15	3.26	
												1,811	0.10	0.43	0.34	
												3,142	0.18	0.74	0.53	
												924	0.05	0.22	0.09	
												216,674	12.39	50.91	44.24	
												3,791	0.22	0.89	0.54	
												0	0.00	0.00	0.00	
												147	0.01	0.03	0.03	
												1,453	0.08	0.34	0.49	
												0	0.00	0.00	0.00	
												0	0.00	0.00	0.00	
												0	0.00	0.00	0.00	
												0	0.00	0.00	0.00	
												0	0.00	0.00	0.00	
												0	0.00	0.00	0.00	
137												425,608	24.34	100.00	100.00	
												425,608				
												17,262				
												110,437				
1308																
		0.260		0.260		0.26		0.260				0.329				
		0		10,936		17,329		0				2,588.8				
		0		10,936		16,571		0				2,375.0				
		154		276		276		323				349				
		0		0		749		0				214				
		28.08		52.39		119.07		0.00				1010.81				
		2.14		1.32		1.98		0.19		71.5 Water/steam jacket		148.40				
		0.00		0.00		5.38		0.00		16.7 Traversing Stirrer		91.03	Gas HHV=	189	Btu/scf	
													Estimated=	555	Btu/lb	
0.73		30.22		53.71		126.44		0.19		88.2 Total		1250.24	Calculated=	560	Btu/lb	
													BulkGas=	4.01%	H2O	
		pois & 17 tph (typical) Coal each:			4.9			Unit Output (MWn)		151.9 MWn			Calc Comb Temp (F)		2080	
		1,936	13.92	3,717	77.60%	6,323	88.00%					70,087	70,086	0.00%		
460				0	0.00%	575	8.00%					10,534	10,534	0.00%		
677				0	0.00%	144	2.00%					119,800	119,801	0.00%		
137	Total			0	0.00%	72	1.00%					217,947	217,947	0.00%		
		0	0.00	0	0.00%	72	1.00%					3,449	3,450	-0.02%		
				0	0.00%						Sub-Totals	421,817	421,817	0.00%		
				0	0.00%							Sum of Streams	Sum of Gas Constituents	Mass Unbalance		
								543	90							
								12	2							
								36	6							
								0	0							
								12	2							
								0	0							
		11,976	86.08	1,073	22.40%			604	100							
		13,912	100	4,790	100.00%	7,185	100.00%					425,608				
137		13,912		4,790		7,185		604								
8.65		3.86		1.33		2.00		0.17				118.22				
350 •		14.7		350 •		350 •		286				286				
553 •		650		1120		1120		1300				1120				

balance check

FERC Cycle Efficiency(g)= 45.59%

FERC Cycle Efficiency(n)= 42.46%

	AE	AF	AG	AH	AI	AJ	AK	AL	AM	AN	AO	AP	AQ	AR
1	Standardized IGCC Gasifier Cogen Application													Reference Coal -
2	Mass & Energy Balance			W 501 D5			Plant							Predicted Gasifier O
3	Stream No.		11				12				13	14		
4	Identification		Air				Bleed Air				Bleed Air	Compressor Dischar		
5	From		Atmosphere				Compressor				for	Compressor		
6	To		Gas Turbine Compressor				Booster Compressor Cooler				Coolant	Combustor		
7	Gas	Mol Wt	lb/hr	lb/mol	wt %	mol %	lb/hr	lb/mol	wt %	mol %	lb/hr	lb/hr	lb/mol	wt %
8														
9	CO	28.010	0	0.00	0.00	0.00	0	0.00	0.00	0.00	0	0	0.00	0.00
10	H2	2.016	0	0.00	0.00	0.00	0	0.00	0.00	0.00	0	0	0.00	0.00
11	CO2	44.010	1,349	0.01	0.05	0.03	137	0.01	0.05	0.03	120	1,092	0.01	0.05
12	H2O	18.015	18,108	0.18	0.64	1.02	1,835	0.18	0.64	1.02	1,618	14,655	0.18	0.64
13	CH4	16.042	0	0.00	0.00	0.00	0	0.00	0.00	0.00	0	0	0.00	0.00
14	C2H6	30.068	0	0.00	0.00	0.00	0	0.00	0.00	0.00	0	0	0.00	0.00
15	H2S	34.076	0	0.00	0.00	0.00	0	0.00	0.00	0.00	0	0	0.00	0.00
16	COS	60.070	0	0.00	0.00	0.00	0	0.00	0.00	0.00	0	0	0.00	0.00
17	N2	28.013	2,136,804	21.65	75.03	77.28	216,534	21.65	75.03	77.28	190,874	1,729,396	21.65	75.03
18	Ar	39.948	37,409	0.38	1.31	0.95	3,791	0.38	1.31	0.95	3,342	30,277	0.38	1.31
19	HCl	36.461	0	0.00	0.00	0.00	0	0.00	0.00	0.00	0	0	0.00	0.00
20	HCN	27.026	0	0.00	0.00	0.00	0	0.00	0.00	0.00	0	0	0.00	0.00
21	NH3	17.030	0	0.00	0.00	0.00	0	0.00	0.00	0.00	0	0	0.00	0.00
22	CS2	76.131	0	0.00	0.00	0.00	0	0.00	0.00	0.00	0	0	0.00	0.00
23	SO2	64.059	0	0.00	0.00	0.00	0	0.00	0.00	0.00	0	0	0.00	0.00
24	NO	30.006	0	0.00	0.00	0.00	0	0.00	0.00	0.00	0	0	0.00	0.00
25	O2	31.999	654,434	6.63	22.98	20.72	66,317	6.63	22.98	20.72	58,459	529,658	6.63	22.98
26	NaCl	58.497	0	0.00	0.00	0.00	0	0.00	0.00	0.00	0	0	0.00	0.00
27	KCl	74.596	0	0.00	0.00	0.00	0	0.00	0.00	0.00	0	0	0.00	0.00
28	Total Gas (lb/hr)		2,848,104	28.86	100.00	100.00	288,614	28.86	100.00	100.00	254,412	2,305,078	28.86	100.00
29														
30	Volumetric Flow Rates (STP 14.7 psia, 59F)													
31	(acfm)		623,179				9,912					79,168		
32	(scfm)		623,179				63,150				56,066	504,363		
33														
34	hgAdiabHeat(BTU/lb)													
35	Cp (BTU/lb F)		0.240				0.255					0.255		
36	HHV (BTU/lb)		0.0				0.0					0.0		
37	LHV (BTU/lb)		0.0				0.0					0.0		
38	Sensible Heat													
39	above 59 F Btu/lb		0				166					166		
40	Latent Heat													
41	of Water Btu/lb		7				7					7		
42														
43	Chemical Heat		0.00				0.00					0.00		
44	(LHV) MBtu/hr													
45	Sensible Heat		0.00				47.90					382.59		
46	above 59 F MBtu/hr													
47	Latent Heat		18.83				1.91					15.24		
48	of Water MBtu/hr													
49	TotalHeat(MBtu/hr)		18.83				49.81					397.83		
50												Parasitic Load		11.83
51														
52	C	12.011		368				57			33		298	298
53	H	1.008		2,012				204			180		1,628	1,628
54	O	16.000		671,511				68,048			59,984		543,479	543,479
55	N	14.007		2,136,804				216,534			190,874		1,729,396	1,729,396
56	S	32.060		0				0			0		0	0
57	CL2	35.500		2,810,695	sub-totals			284,823	sub-totals		251,070	sub-totals	2,274,801	2,274,801
58	H2O	18.016												balance che
59	ZnFe2O4													
60	ZnS													
61	FeS													
62	Fe2O3													
63	ZnO													
64	ASH													
65	Total Solids													
66	Total Flow (ppb)		2,848,104				288,614				254,412	2,305,078		
67														
68	Total Flow (pps)		791.14 *				80.17			*	70.67	640.30		
69	Pressure (psia)		14.7 *				211 *					211		
70	Temperature (F)		59 *				711 *					711		

AR	AS	AT	AU	AV	AW	AX	AY	AZ	BA	BB	BC	BD	BE	BF	BG
								J-1538					DE-AC21-89MC26291		1
oal -	Illinois #6													10/16/90	2
sifier Output				Revision 7											3
		15				16					17				4
		Fuel			%H2S	Inlet Gas			Thrml NO (ppmvd)	25	Exhaust Gas				5
		HGCU			Removed	GT Combustor			*Rich/Lean Red. F	85%	Gas Turbine				6
		GT Combustor			99.0%	GT Expander									7
	wt %	mol %	lb/hr	mol/hr	wt %	mol %	lb/hr	lb/mol	mols	wt %	mol %	lb/hr	mols/hr	wt %	mol %	8
0	0.00	0.00	111,763	3,990	26.38	22.84	0	0.00	0.00	0.00	0.00	0	0.00	0.00	0.00	9
0	0.00	0.00	4,966	2,463	1.17	14.10	0	0.00	0.00	0.00	0.00	0	0.00	0.00	0.00	10
1	0.05	0.03	50,015	1,136	11.80	6.51	257,404	2.73	0.0021	9.43	6.21	257,524	5851.49	8.63	5.68	11
8	0.64	1.02	23,922	1,328	5.65	7.60	109,448	1.16	0.00	4.01	6.45	111,066	6165.19	3.72	5.99	12
0	0.00	0.00	9,131	569	2.16	3.26	0	0.00	0.00	0.00	0.00	0	0.00	0.00	0.00	13
0	0.00	0.00	1,811	60	0.43	0.34	0	0.00	0.00	0.00	0.00	0	0.00	0.00	0.00	14
0	0.00	0.00	31	1	0.01	0.01	0	0.00	0.00	0.00	0.00	0	0.00	0.00	0.00	15
0	0.00	0.00	9	0	0.00	0.00	0	0.00	0.00	0.00	0.00	0	0.00	0.00	0.00	16
5	75.03	77.28	216,674	7,735	51.14	44.28	1,947,079	20.67	0.0255	71.35	73.80	2,137,953	76320.04	71.67	74.10	17
8	1.31	0.95	3,791	95	0.89	0.54	34,067	0.36	0.00	1.25	0.91	37,409	936.44	1.25	0.91	18
0	0.00	0.00	0	0	0.00	0.00	0	0.00	0.00	0.00	0.0	0	0.00	0.00	0.00	19
0	0.00	0.00	147	5	0.03	0.03	0	0.00	0.00	0.00	0.00	0	0.00	0.00	0.00	20
0	0.00	0.00	1,453	85	0.34	0.49	0	0.00	0.00	0.00	0.00	0	0.00	0.00	0.00	21
0	0.00	0.00	0	0	0.00	0.00	0	0.00	0.00	0.00	0.00	0	0.00	0.00	0.00	22
0	0.00	0.00	0	0	0.00	0.00	69	0.0007	0.0000	0.0025	0.0011	69	1.08	0.00	0.00	23
0	0.00	0.00	0	0	0.00	0.00	563	0.0060	0.0000	0.0206	0.0199	563	18.77	0.02	0.02	24
3	22.98	20.72	0	0	0.00	0.00	380,163	4.04	0.0044	13.93	12.61	438,622	13707.36	14.70	13.31	25
0	0.00	0.00	0	0	0.00	0.00	0	0.00	0.00	0.00	0.00	0	0.00	0.00	0.00	26
0	0.00	0.00	0	0	0.00	0.00	0	0.00	0.00	0.00	0.00	0	0.00	0.00	0.00	27
6	100.00	100.00	423,713	17,469	100.00	100.00	2,728,791	28.97	0.0345	100.00	100.00	2,983,203	103000.37	100.00	100.00	28
							2,728,794 bal ck					2,983,206 bal ck				29
																30
			17,894				209,286					1,753,054				31
			110,291				594,644					650,312				32
																33
																34
			0.334				0.278					0.267				35
			2,548.9				0.0					0.0				36
			2,330.0				0.0					0				37
																38
			375				557					246				39
																40
			219				42					39				41
																42
			987.26				0.00					0.00				43
																44
			158.68				1520.15					734.83				45
																46
			92.73				113.83					115.51				47
																48
			1238.67				1633.98	1636.50 bal chk				850.34				49
												1.05 Turbine Compressor Surge Margin				50
ad	11.83 MWg			Combustion Turbine Output			107.179 MWg									51
298	298	0.00%		69,903			70,201	70,201	0.00%			70,234	70,234	0.00%		52
628	1,628	0.00%		10,533			12,161	12,161	0.00%			12,341	12,341	0.00%		53
479	543,479	0.00%		121,506			664,985	664,988	0.00%			724,972	724,972	0.00%		54
396	1,729,396	0.00%		217,947			1,947,342	1,947,342	0.00%			2,138,216	2,138,216	0.00%		55
0	0	0.00%		34			34	34	0.10%			34	34	0.00%		56
801	2,274,801	0.00%		419,923	sub-total		2,694,724	2,694,727	0.00%	sub-total		2,945,797	2,945,797	0.00%	sub-total	57
balance check							balance check					balance check				58
																59
																60
																61
																62
																63
																64
																65
																66
			423,713				2,728,791					2,983,203				67
																68
			117.70				758.00					828.67				69
			286.3				203 *					15.13				70
			1180				2,060 *					980 *				

	BH	BI	BJ	BK	BL	BM	BN	BO	BP	BQ	BR	BS
1	**Standardized IGCC Gasifier Cogen Application**							**Reference Coal -**		**Illinois #6**		
2	**Mass & Energy Balance**			**W 501 D5**				**Predicted Gasifier Output**				
3	Stream No.			18			19	Thrml NO (ppmvd)		25	20	21
4	Identification			Fuel for Supplementary Firing			Flue Gas		SCR Red F	80 %	Superheated Steam	Low Pressure Ste
5	From			Gasifier			HRSG		R/L Red F	85 %	HRSG	HRSG
6	To			HRSG			Stack		NOx Reburn F	0 %	Steam Turbine	Steam Turbine
7	Gas	Mol Wt	lb/hr	lb/mol	wt %	mol %	lb/hr	mols/hr	wt %	mol %	lb/hr	lb/hr
8												
9	CO	28.010	0	6.39	26.26	22.82	0	0.00	0.00	0.00		
10	H2	2.016	0	0.29	1.18	14.26	0	0.00	0.00	0.00		
11	CO2	44.010	0	2.86	11.75	6.50	257,524	5851.49	8.63	5.68		
12	H2O	18.015	0	1.24	5.11	6.90	111,066	6165.19	3.72	5.99		
13	CH4	16.042	0	0.52	2.15	3.26	0	0.00	0.00	0.00		
14	C2H6	30.068	0	0.10	0.43	0.34	0	0.00	0.00	0.00		
15	H2S	34.076	0	0.18	0.74	0.53	0	0.00	0.00	0.00		
16	COS	60.070	0	0.05	0.22	0.09	0	0.00	0.00	0.00		
17	N2	28.013	0	12.39	50.91	44.24	2,137,953	76320.04	71.68	74.11		
18	Ar	39.948	0	0.22	0.89	0.54	37,409	936.44	1.25	0.91		
19	HCl	36.461	0	0.00	0.00	0.00	0	0.00	0.00	0.00		
20	HCN	27.026	0	0.01	0.03	0.03	0	0.00	0.00	0.00		
21	NH3	17.030	0	0.08	0.34	0.49	0	0.00	0.00	0.00		
22	CS2	76.131	0	0.00	0.00	0.00	0	0.00	0.00	0.00	Stack Emissions (lb/MBtu)	
23	SO2	64.059	0	0.00	0.00	0.00	69	1.08	0.00	0.00	0.053	
24	NO	30.006	0	0.00	0.00	0.00	113	3.75	0.00	0.00	0.09	
25	O2	31.999	0	0.00	0.00	0.00	438,622	13707.36	14.71	13.31		
26	NaCl	58.497	0	0.00	0.00	0.00	0	0.00	0.00	0.00		
27	KCl	74.596	0	0.00	0.00	0.00	0	0.00	0.00	0.00		
28	Total Gas (lb/hr)		0	24.34	100.00	100.00	2,982,752	102985.35	100.00	100.00		
29							2,982,756	bal chk				
30	Volumetric Flow Rates (STP 14.7 psia, 59F)											
31	(acfm)		0				889,507					
32	(scfm)		0				650,217					
33												
34	Heat (BTU/lb)										1459.5	
35	Cp (BTU/lb F)		0.334				0.248					
36	HHV (BTU/lb)		2548.9				0.0					
37	LHV (BTU/lb)		2330.0				0					
38	Sensible Heat above											
39	59 F Btu/lb steam		0				47					
40	Latent Heat of											
41	Water Btu/lb steam		0				39					
42												
43	Chemical Heat		0.00				0.00					
44	(LHV) MBtu/hr											
45	Sensible Heat		0.00				141.03					
46	above 59 F MBtu/hr											
47	Latent Heat		0.00				115.51					
48	of Water MBtu/hr											
49	TotalHeat(MBtu/hr)		0.00				256.54				485.70	
50												HRSG Turbine Ou
51												
52	C	12.011		0			70,234	70,234	0.00%			
53	H	1.008		0			12,341	12,341	0.00%			
54	O	16.000		0			724,732	724,732	0.00%			
55	N	14.007		0			2,138,006	2,138,006	0.00%			
56	S	32.060		0			34	34	0.00%			
57	CL2	35.500		0	sub-total		2,945,347	2,945,347	0.00%	sub-total		
58	H2O	18.016										
59	ZnFe2O4											
60	ZnS											
61	FeS											
62	Fe2O3											
63	ZnO											
64	ASH											
65	Total Solids											
66	Total Flow (pph)		0				2,983,203				332,784	1
67												
68	Total Flow (pps)		0 *				828.67				92.44	
69	Pressure (psia)		286.3				14.7				1265	
70	Temperature (F)		1180				250 *				935	

BS	BT	BU	BV	BW
	J-1538	DE-AC21-89MC26291		1
	Revision 7		10/16/90	2
21	22	23	24	3
Low Pressure Steam	Make Up Water	Sat. Steam	Process Stm	4
HRSG	WaterTreatment	Gasifier	Stm Turbine	5
Steam Turbine	HRSG	Steam Turbine	Process Facility	6
lb/hr	lb/hr	lb/hr	lb/hr	7
				8
				9
				10
				11
				12
				13
				14
				15
				16
				17
				18
				19
				20
				21
				22
				23
				24
				25
				26
				27
				28
				29
				30
				31
				32
				33
1242	48	1204	1214.5	34
				35
				36
				37
				38
				39
				40
				41
				42
				43
				44
				45
				46
				47
				48
87.26	1.98	71.54	29.63	49
HRSG Turbine Output	56.5	MWg		50
				51
				52
				53
				54
				55
				56
				57
				58
				59
				60
				61
				62
				63
				64
				65
70,258	41,267	70,418	24,401	66
				67
19.52	11.46	19.56	6.78	68
115	15	350	250	69
432	80	432	420	70

	BX	BY	BZ	CA	CB	CC	CD	CE	CF	CG	CH	CI
1	Standardized IGCC Gasifier Cogen Application								Reference Coal -			Illinois #6
2	Mass & Energy Balance				W 501 D5				Predicted Gasifier Output			
3	Stream No.		25		26					27		27a
4	Identification		Regen Recycle Loop		Conc SO2 Bleed					Elemental Sulfur		Elemental Sulfur
5	From		Recycle Blower		Regen Loop					Resox Process		DSRP
6	To		Regenerator		SRP					Marketable Byproduct		Marketable Byprod
7	Gas	Mol Wt	lb/hr	wt%	lb/hr	lbs/mol	mols/hr	wt%	mol%	lb/hr	wt%	lb/hr
8												
9	CO	28.010			0	0.00	0.00	0.00	0.00			
10	H2	2.016			0	0.00	0.00	0.00	0.00			
11	CO2	44.010	174	0.05	14	0.02	0.33	0.05	0.04			
12	H2O	18.015	2,169	0.62	181	0.20	10.03	0.62	1.11			
13	CH4	16.042			0	0.00	0.00	0.00	0.00			
14	C2H6	30.068			0	0.00	0.00	0.00	0.00			
15	H2S	34.076			0	0.00	0.00	0.00	0.00			
16	COS	60.070			0	0.00	0.00	0.00	0.00			
17	N2	28.013	262,379	74.87	21,865	24.10	780.53	74.87	86.02			
18	Ar	39.948	0	0.00	0	0.00	0.00	0.00	0.00			
19	HCl	36.461			0	0.00	0.00	0.00	0.00			
20	HCN	27.026			0	0.00	0.00	0.00	0.00			
21	NH3	17.030			0	0.00	0.00	0.00	0.00			
22	CS2	76.131			0	0.00	0.00	0.00	0.00			
23	SO2	64.059	81,916	23.37	6,826	7.52	106.56	23.37	11.74			
24	NO	30.006			0	0.00	0.00	0.00	0.00			
25	O2	31.999	3,806	1.09	317	0.35	9.91	1.09	1.09			
26	NaCl	58.497			0	0.00	0.00	0.00	0.00			
27	KCl	74.596			0	0.00	0.00	0.00	0.00			
28	Total Gas (lb/hr)		350,443	100.00	29,204	32.19	907	100.00	100.00			
29												
30	Volumetric Flow Rates		(STP 14,7 psia, 59 F)									
31	(acfm)		12,319		971							
32	(scfm)		68,746		5,729							
33												
34	Heat (BTU/lb)											
35	Cp (BTU/lb F)		0.240		0.240					0.000		
36	HHV (BTU/lb)											
37	LHV (BTU/lb)											
38	Sensible Heat above											
39	59 F Btu/lb steam											
40	Latent Heat of											
41	Water Btu/lb steam											
42												
43	Chemical Heat									13.58		
44	(LHV) MBtu/hr											
45	Sensible Heat		112.79		8.70					0.00		
46	above 59 F MBtu/hr											
47	Latent Heat		2.26		0.19					0.00		
48	of Water MBtu/hr											
49	TotalHeat(MBtu/hr)		115.04		8.89					13.58		
50												
51												
52	C	12.011										
53	H	1.008										
54	O	16.000										
55	N	14.007										
56	S	32.060								3,413		
57	CL2	35.500										
58	H2O	18.016										
59	ZnFe2O4											
60	ZnS											
61	FeS											
62	Fe2O3											
63	ZnO											
64	ASH				0.00			0				
65	Total Solids											
66	Total Flow (pph)		350,443		29,204					3,413		
67												
68	Total Flow (pps)		97.35		8.11					0.95		
69	Pressure (psia)		294		294					15		
70	Temperature (F)		1400		1300					284		

CI	CJ	CK	CL	CM
B #6	J-1538	DE-AC21-89MC26291		1
	Revision 7		10/16/90	2
27a	27b	28		3
ental Sulfur	Sulfur Dioxide	Ash		4
DSRP	SO2 Recovery Unit	SO2 Reductor		5
able Byproduct	Marketable Byproduct	Disposal		6
lb/hr	lb/hr	lb/hr	wt%	7
				8
				9
				10
				11
				12
				13
				14
				15
				16
				17
				18
				19
				20
				21
				22
				23
				24
				25
				26
				27
				28
				29
				30
				31
				32
				33
				34
0.000	0.000			35
				36
				37
				38
		154	0	39
				40
				41
				42
13.58	13.58	4.91	0	43
				44
0.00	0.00	0.00	0	45
				46
0.00	0.00	0.00	0	47
				48
13.58	13.58	4.91	0.4	49
				50
				51
		338	3	52
				53
				54
				55
3,413	3,413			56
				57
				58
				59
				60
				61
				62
				63
		11,976	97	64
		12,314	100	65
3,413	6,826	12,314	100	66
				67
0.95	1.90	3.42		68
15	100	15		69
190	59	284		70

100 MW Cogen Cycle
General Electric 7111 EA

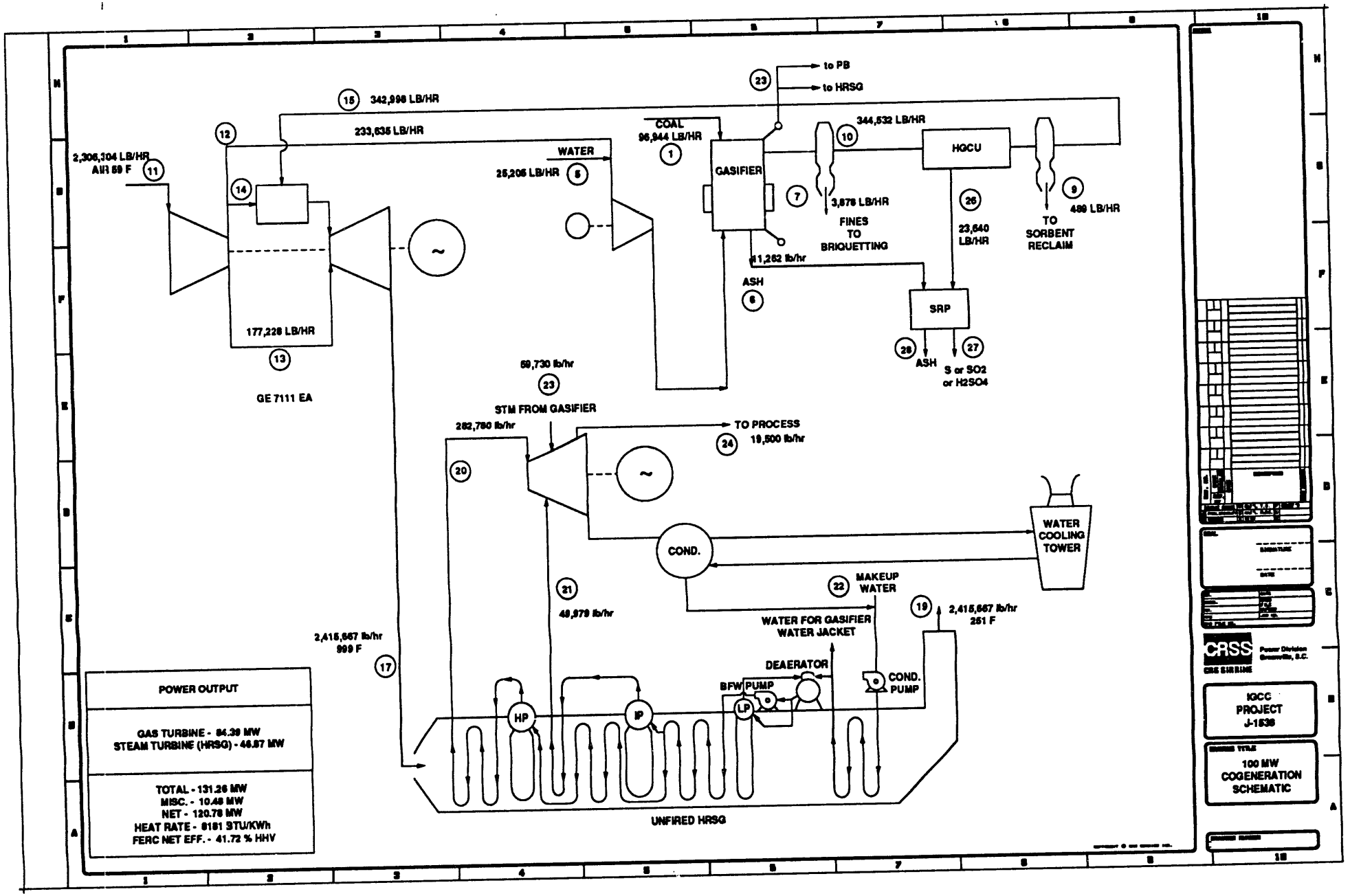
15 342,998 LB/HR
233,635 LB/HR
12
2,306,104 LB/HR
AIR 59 F
11
14
177,228 LB/HR
13
GE 7111 EA
WATER
25,206 LB/HR
5
COAL
96,944 LB/HR
1
GASIFIER
23
to PB
to HRSG
7
3,878 LB/HR
FINES
TO
BRIQUETTING
10
344,532 LB/HR
HGCU
26
23,640
LB/HR
9
489 LB/HR
TO
SORBENT
RECLAIM
11,262 lb/hr
ASH
6
SRP
28
ASH
27
S or SO2
or H2SO4
59,730 lb/hr
23
STM FROM GASIFIER
282,780 lb/hr
TO PROCESS
24
19,500 lb/hr
20
COND.
WATER
COOLING
TOWER
21
49,979 lb/hr
22
MAKEUP
WATER
WATER FOR GASIFIER
WATER JACKET
19
2,415,667 lb/hr
251 F
2,415,667 lb/hr
999 F
17
DEAERATOR
BFW PUMP
COND.
PUMP
HP
IP
LP
UNFIRED HRSG
POWER OUTPUT
GAS TURBINE - 84.39 MW
STEAM TURBINE (HRSG) - 46.87 MW
TOTAL - 131.26 MW
MISC. - 10.48 MW
NET - 120.78 MW
HEAT RATE - 8181 BTU/KWh
FERC NET EFF. - 41.72 % HHV
CRSS
Power Division
Greenville, S.C.
CRS SIRRINE
IGCC
PROJECT
J-1538
100 MW
COGENERATION
SCHEMATIC

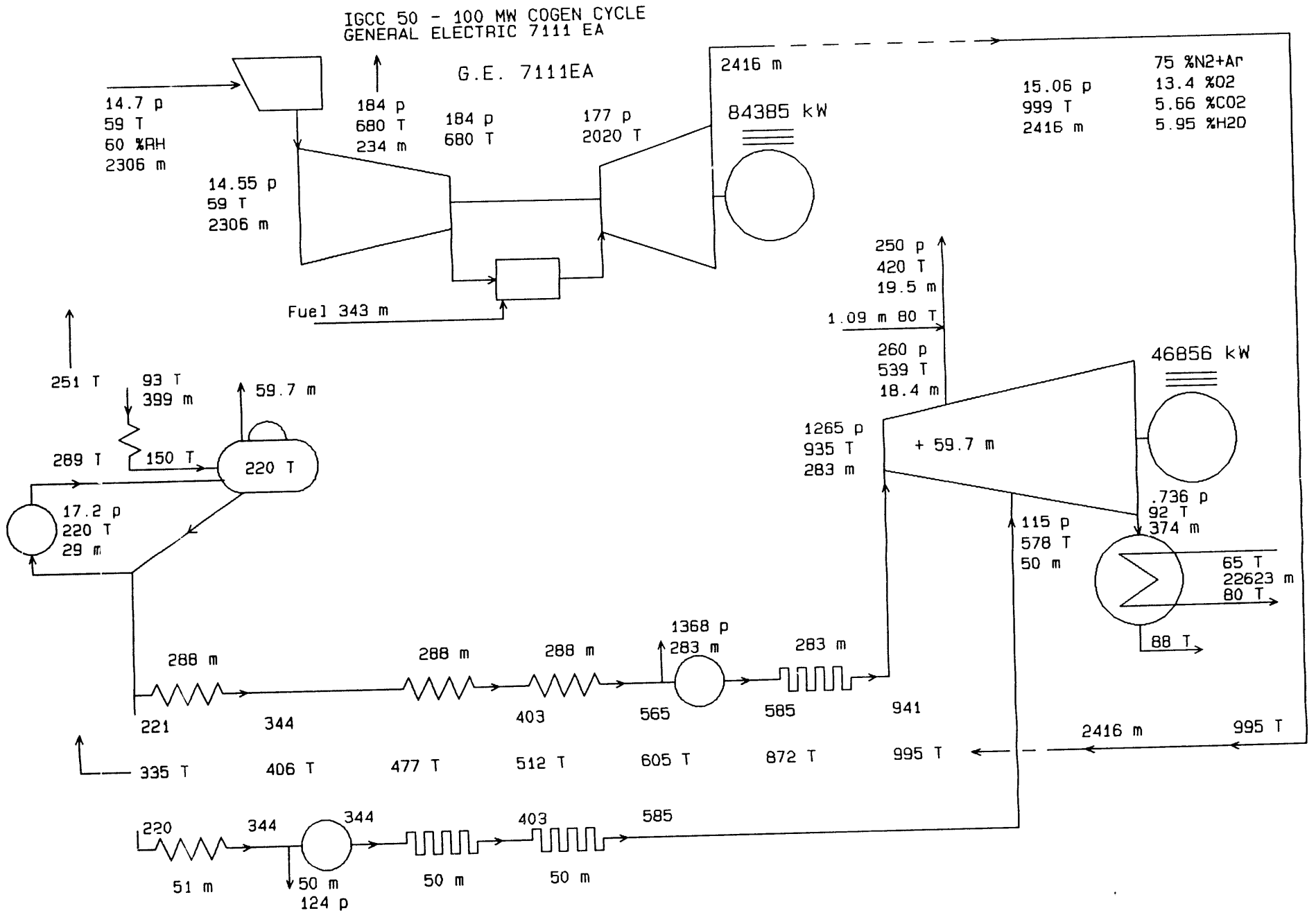

GTPRO 3.31 Michael Brown 10-15-1990 13:24:57
p psia, T F, m kpph

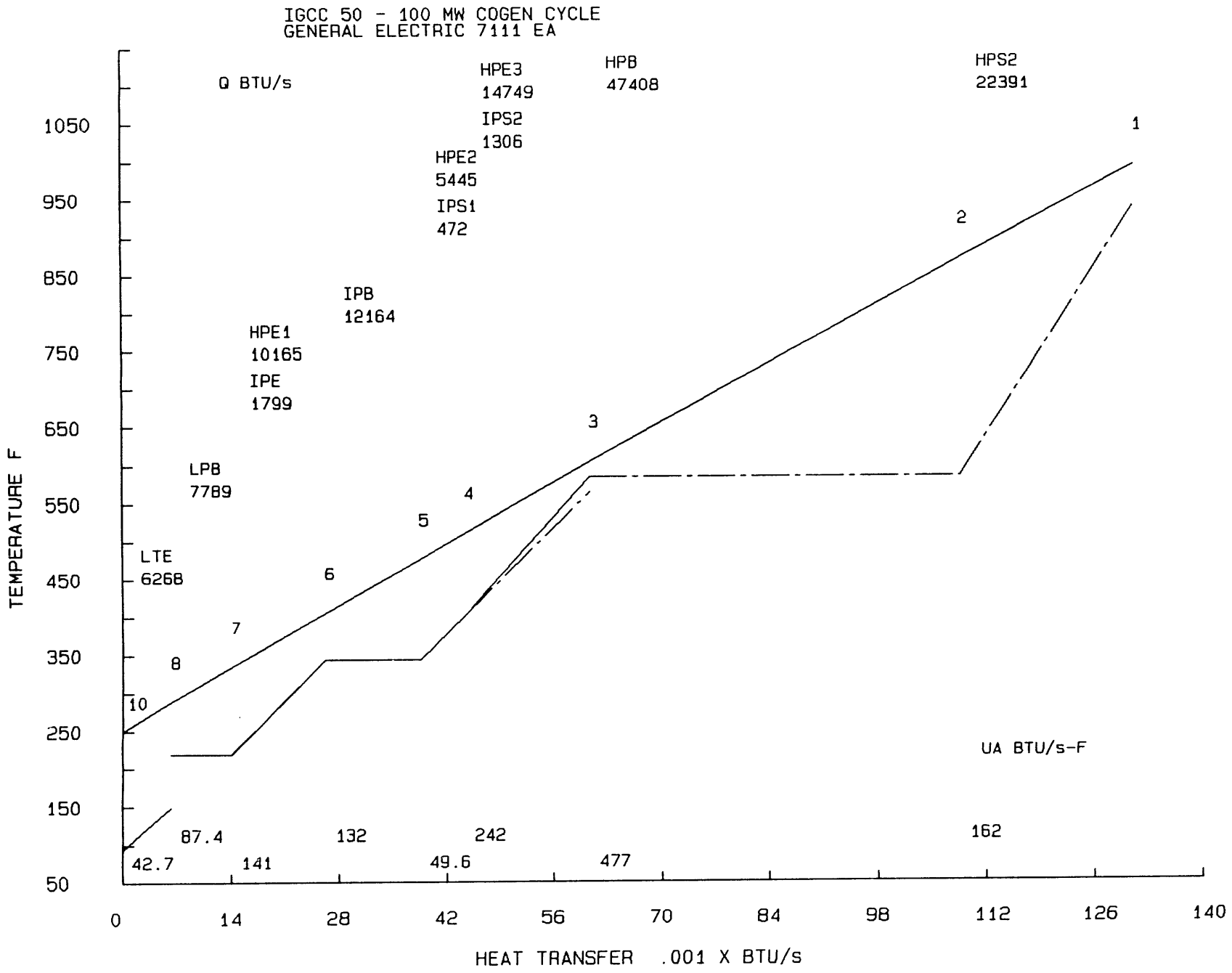

GTPRO 3.31 Michael Brown 10-15-1990 13:24:57

GTPRO 3.31 Michael Brown 10-15-1990 13:24:31
IGCC 50 - 100 MW COGEN CYCLE
GENERAL ELECTRIC 7111 EA

ESTIMATED G.T. SITE PERFORMANCE

Fuel=Fuel G.T. @ 100 % rating, XIGV= 0
Site ambient conditions: 14.7 psia, 59 F, 60 % RH
Inlet loss= 4 inch H2O, exhaust loss= 10 inch H2O
Evap. inlet cooler to 0 % RH.

G.T. DEVIATION FROM NOMINAL, CLEAN ENGINE

Compressor inlet airflow % reduction = 0
Compressor efficiency reduction % = 0
Turbine efficiency reduction % = 0
Maximum firing temperature excess over base load = 0 F
Combustor % pressure loss (0 means nominal value) = 0
Combustor inefficiency + heat loss % (0 means nominal value) = 0
Cooling air increase % (0 means nominal value) = 0
Process air bleed location (0 means none) = 1
Process air bleed % of inlet = 10.13

#	Model	PR	TIT F	TET F	Mair kpph	kWe	H.R.LHV BTU/kWh	Mex kpph	N2+Ar %	O2 %	CO2 %	H2O %
1	G.E. 7111EA	12.7	2020	999	2306	84385	10986	2416	75.02	13.37	5.66	5.95

Fuel flow = 343 kpph
G.T. auxillary power = 423 kWe.

ESTIMATED G.T. CYCLE

STREAM	TEMP. F	PRESS. psia	MASSFLOW kpph	M.W.	MOLE COMPOSITION % N2+Ar	O2	CO2	H2O
Ambient air in	59	14.70	2306.29	28.75	78.22	20.74	0.03	1.01
Compr. inlet	59	14.55	2306.29	28.75	78.22	20.74	0.03	1.01
Turbine coolant	misc.		177.22					
Process air bld	680	184.42	233.63	28.75	78.22	20.74	0.03	1.01
Compr. disch.	680	184.42	1895.45	28.75	78.22	20.74	0.03	1.01
Turbine inlet	2020	177.04	2238.33	28.87	74.77	12.78	6.11	6.34
Turbine exhaust	999	15.06	2415.55	28.86	75.02	13.37	5.66	5.95

Compressor= 103510 Turbine= 189871 Mech. loss= 691 kW
Turbine coolant= 7.68 % compr in
GT specific power @ gen term= 36.6 kW per kpph
GT efficiency @ gen term= 28.58 % HHV = 31.06 % LHV

GAS TURBINE/GENERATOR HEAT BALANCE

Energy in = 288349 BTU/s

Inlet air Sensible	Inlet air Latent	Water Inj.	Steam Inj.	Fuel HHV
4218	4265	0	0	279866

Energy out = 288423 BTU/s

Incompl comb & carcass rad	GT Mech. Losses	Gearbox Loss	Generator Loss	Exhaust Sensible	Exhaust Latent	Electric Output	Proc Air
1030	439	0	1228	168691	26189	79986	10862

Zero enthalpy: dry gases & liquid water @ 32 F (273.15 K)

Heat Balance Error = In - Out =-74.1 BTU/s =-.026 %

IGCC 50 - 100 MW COGEN CYCLE
GENERAL ELECTRIC 7111 EA
Type: 6 Subtype: 2 Induction

	p psia	T F	h BTU/lb	m kpph	UA BTU/s-F	Q BTU/s	A sq.ft
Cnd rtrn	0.74	87.57	55.58	374.082			
Stm rtrn	17.89	250.00	218.49	14.625			
Makeup	17.89	80.00	48.02	11.530	(Includes 1.09	kpph	for desup)
FW supl	17.89	93.36	61.35	399.150			
LTE				399.150	43	6268	19621
from LTE	17.20	150.00	117.88	399.150			
LPB				29.046	87	7789	36998
water bleed				59.730			
Intd. FW	17.20	220.00	188.13	339.420			
HPFW	1479.87	221.17	193.69	288.443			
HPE1				288.443	120	10165	53372
6	1422.95	343.99	320.56	0.000			
HPE2				288.443	46	5445	19759
7	1395.59	403.49	388.51	0.000			
HPE3				288.443	217	14749	92523
8	1368.22	564.65	572.59	0.000			
Blwdn	1368.22	584.65	595.43	5.656			
HPB				282.787	477	47408	186175
9	1368.22	584.65	1175.66	0.000			
HPS1				282.787	0	0	0
10	1368.22	584.65	1175.66	0.000			
H[illegible]				282.787	162	22391	80024
11	1315.60	941.00	1460.70	0.000			
Into HPT	1265.00	935.00	1458.99	282.787			
bef addn	350.00	630.40	1330.20	282.787			
HPT addn	350.00	432.00	1204.98	59.730			
aft addn	350.00	590.06	1308.36	342.517			
HPT bld.	260.00	538.57	1286.76	18.413			
Desuperhtr				1.087			
HPT proc	250.00	420.00	1214.85	19.500			
HPT exit	115.00	389.97	1219.63	324.104			
IPFW	129.36	220.09	188.56	50.977			
IPE				50.977	21	1799	9398
1	124.38	343.99	315.62	0.000			
Blwdn	124.38	343.99	315.62	1.000			
IPB				49.978	132	12164	54109
2	124.38	343.99	1191.86	0.000			
IPS1				49.978	4	472	2087
3	124.38	403.49	1225.89	0.000			
IPS2				49.978	25	1306	13085
4	119.60	584.65	1319.98	0.000			
Into LPT	115.00	413.07	1232.64	374.082			
LPT exit	0.74	91.57	962.70	374.082			

STEAM TURBINE

	No. of steps	Exit Quality	Efficiency(%)	Work (kW)
To HPT additn	4	1.157		
To HPT bleed	1	1.102		
To HPT exit	3	1.033	81.66	19217
To LPT exit	13	0.867	81.58	29592

Gross power = 48808 kW. Mech/Elect losses = 1952 kW.
Generator output = 46856 kWe. ST auxiliaries = 328 kWe
Boiler feedpumps = 533 kWe

CONDENSER

	p psia	T F	h BTU/lb	m kpph
LPT exit	0.7365	91.57	962.70	374.08
Saturation	0.7365	91.57		
Condensate well	0.7365	87.57	55.58	374.08
Cooling water in		65.00		22622.64
Cooling water out		80.00		22622.64

Number of passes= 1 UA= 5232 BTU/s-F Surface area = 25592 sq.ft
Tubes: OD = 1 in Length= 38.6 ft number= 2534
Cooling water: Velocity= 9 ft/s DP = 9.02 psia Pumps = 255 kWe.

STEAM CYCLE HEAT BALANCE

Energy in = 216364 BTU/s

GT Exhaust Sensible	GT Exhaust Latent	Duct Burner Fuel HHV	Makeup+Proc Return	Pump Work	External Steam
168691	26189	0	1041	451	19993

Energy out = 216365 BTU/s

Heat Radiated	Blow down	Mech/Elec Losses	Stack Sens.	Stack Latent	Condnsr C.W.	Process Steam	GT Injec.	Proc. Water	Electric Output
2233	1023	1651	36693	26189	94261	6580	0	3121	44414

Zero enthalpy: dry gases & liquid water @ 32 F (273.15 K)
Balance Error = In - Out =-.906 BTU/s = 0 %

HRSG GAS-SIDE PROFILE

	Tg F	Tw F HP/IP	DT F HP/IP	Qg/UA F	DELTA P inch H2O	UA BTU/s-F	Qg BTU/s	Vg ft/s	Tube Rows	Lngth ft
1	994.9	941.0	53.9							
				139.5	1.7	162.1	22614.4	58.0	6.5	2.7
	872.0	584.6	287.3							
2	872.0	584.6	287.3							
				100.3	3.4	477.3	47882.1	49.9	15.2	6.3
	604.7	584.6	20.0							
3	604.7	564.6	40.0							
3	604.7	584.6	20.0							
				66.9	1.6	242.4	16215.5	42.4	8.6	3.6
	511.9	403.5	108.4							
	511.9	403.5	108.4							
4	511.9	403.5	108.4							
4	511.9	403.5	108.4							
				120.4	0.3	49.6	5976.3	39.8	1.8	0.7
	477.4	344.0	133.4							
	477.4	344.0	133.4							
5	477.4	344.0	133.4							
				93.2	0.7	131.9	12286.1	37.6	4.4	1.8
	406.0	344.0	62.0							
6	406.0	344.0	62.0							
6	406.0	344.0	62.0							
				85.5	0.7	141.4	12083.9	34.6	5.1	2.1
	335.2	221.2	114.0							
	335.2	220.1	115.1							
7	335.2	220.0	115.2							
				90.0	0.4	87.4	7866.8	32.2	3.0	1.3
	288.8	220.0	68.8							
8	288.8	150.0	138.8							
				148.2	0.2	42.7	6331.1	30.4	1.6	0.7
	251.3	93.4	158.0							

Duct burner fuel= 0 kpph
Gas mole composition: 75 %N2+Ar 13.4 %O2 5.66 %CO2 5.95 %H2O .002 %SO2
Flue gas dew point = 97 F M.W.= 28.9

HRSG TOTALS	Economisers	Evaporators	Superheaters	TOTAL
Q BTU/s	30420	67361	24160	129957
UA BTU/s-F	447	697	191	1335
A sq.ft	194673	277282	95196	567150

Prime surface= 32991 fin surface= 534158 sq.ft. Averaged fin eff.= .727
HRSG frontal area = 808 sq.ft. Gas mass flux= 5.93 kpph/sq.ft
HRSG length = 19.3 ft, 46.4 tube rows, 1940 ft of tubes per row.
2 in dia. tubes with serrated fins, staggered arrangement.
Fin thickness/dia.= .03 , height/dia.= .4 , spacing/dia.= .07
Tube transverse pitch/dia.= 2.5 , row longitudinal pitch/dia.= 2.5

GE 7111 EA

Water cooling

air to coal ratio	2.41	air pressure	184	Cp air	0.248
water coal ratio	0.133	air temperature	600	Cp water	1.000
air to water ratio	18.12	water temperature	80	Cp steam	0.455

	lb	wt %	mols	mol %	partial pressure
air	18.12	94.77%	0.63	91.90%	169.10
water	1.00	5.23%	0.06	8.10%	14.90

sat temp 213

Temperature of combined stream entering boost compressor

400.04 F sat pressure 247 psia Rel. Hum. 6.03%

Temperature of stream exiting compressor (85% comp eff)

Tf = Ti + (Ti/n*((Pf/Pi)^((k-1)/k)-1))

where
Ti - inlet temperature - 400.04 F - 860.04 R
n - efficiency - 85.00%
k - ratio of specific heat @ constant pressure to specific
to specific heat @ constant volume 1.384
Pf - final pressure 350 psia
Pi - initial pressure 184 psia

Tf = 597.65 F

	A	B	C	D	E	F	G	H	I	J	K	L	M	N	O
1	Standardized IGCC Gasifier Cogen Application													Reference Coal -	
2	Mass & Energy Balance					GE 7111 EA		Plant		Full Load				Predicted Gasifier Out	
3	Stream No.			1		2		3		4				5	
4	Identification			AR Coal		Coal Fines		Sized Coal		CompAir@	2.41 A/C			Water @	0.26
5	From			Illinois #6		Sizer @	30%	Combined Streams		Aux Compr &/or Booster Compr				Cooling Water	H2O/
6	To			Sizer		Briquetting		Gasifier		Gasifier				Gasifier	Coal
7	Gas	Mol Wt		lb/hr	wt %	lb/hr	wt %	lb/hr	wt %	lb/hr	lb/mol	wt %	mol %	lb/hr	
8															
9	CO	28.010								0	0.00	0.00	0.00		
10	H2	2.016								0	0.00	0.00	0.00		
11	CO2	44.010								111	0.01	0.05	0.03		
12	H2O	18.015								1,485	0.18	0.64	1.02	25,205	
13	CH4	16.042								0	0.00	0.00	0.00		
14	C2H6	30.068								0	0.00	0.00	0.00		
15	H2S	34.076								0	0.00	0.00	0.00		
16	COS	60.070								0	0.00	0.00	0.00		
17	N2	28.013								175,286	21.65	75.03	77.28		
18	Ar	39.948								3,069	0.38	1.31	0.95		
19	HCl	36.461								0	0.00	0.00	0.00		
20	HCN	27.026								0	0.00	0.00	0.00		
21	NH3	17.030								0	0.00	0.00	0.00		
22	CS2	76.131								0	0.00	0.00	0.00		
23	SO2	64.059								0	0.00	0.00	0.00		
24	NO	30.006								0	0.00	0.00	0.00		
25	O2	31.999								53,684	6.63	22.98	20.72		
26	NaCl	58.497								0	0.00	0.00	0.00		
27	KCl	74.596								0	0.00	0.00	0.00		
28	Total Gas (lb/hr)									233,635	28.86	100.00	100.00	25,205	
29															
30	Volumetric Flow Rates (STP 14.7 psia, 59F)														
31	(acfm)									4,377					
32	(scfm)									51,121					
33															
34	Heat (BTU/lb)													1332	
35	Cp (BTU/lb F)									0.251					
36	HHV (BTU/lb)			10,776		10,776		10,776		0					
37	LHV (BTU/lb)			10,239		10,239		10,260		0					
38	Sensible Heat above														
39	59 F Btu/lb steam			0		0		0		135					
40	Latent Heat of														
41	Water Btu/lb steam									7					
42															
43	Chemical Heat			992.61		297.78		1034.51		0.00					
44	(LHV) MBtu/hr														
45	Sensible Heat			0.00		0.00		0.00		31.58					
46	above 59 F MBtu/hr														
47	Latent Heat			52.05		15.62		52.05		1.54					
48	of Water MBtu/hr														
49	TotalHeat(MBtu/hr)			1044.67		313.40		1086.56		33.12				33.57	
50				Number of Gasifiers for 85% Plant Availability @90% Gasifier Availability,										350	psia &
51															
52	C	12.011		58,273	60.11%	17,482	60.11%	61,282	60.78%		30			2,801	
53	H	1.008		4,043	4.17%	1,213	4.17%	4,043	4.01%		165			22,405	
54	O	16.000		7,339	7.57%	2,202	7.57%	7,339	7.28%		55,085			25,205	Total
55	N	14.007		1,144	1.18%	343	1.18%	1,144	1.13%		175,286				
56	S	32.060		2,792	2.88%	838	2.88%	2,792	2.77%		230,566	Total			
57	CL2	35.500		0	0.00%	0	0.00%	0	0.00%						
58	H2O	18.016		13,669	14.10%	4,101	14.10%	13,669	13.56%						
59	ZnFe2O4														
60	ZnS														
61	FeS														
62	Fe2O3														
63	ZnO														
64	ASH			9,694	10.00%	2,908	10.00%	10,563	10.48%						
65	Total Solids			96,944	100.01%	29,083	100.01%	100,831	100.00%						
66	Total Flow (pph)			96,944 •		29,083		100,831		233,635				25,205	
67															
68	Total Flow (pps)			26.93		8.08		28.01		64.90				7.00	
69	Pressure (psia)			14.7		14.7		14.7		350 •				350 •	
70	Temperature (F)			59		59		59		598 •				598 •	

O	P	Q	R	S	T	U	V	W	X	Y	Z	AA	AB	AC	AD
	Illinois #6								J-1538		DE-AC21-89MC26291				1
Output			10/16/90						Revision 7						2
	6	Uncomb	7		8		9				10	55 scf/lb of coal			3
9.26	Ash	Carbon	Fines (Char)		Tar		Dust(per RTI dia)		Miscellaneous		Hot Gas with Tars				4
120/	Gasifier	2.69%	Gasifier @	4.00%	Gasifier @	6.00%	Final Cyclone		Gasifier Heat		Gasifier	N2 in coal			5
Coal	Ash Silo		Briquetting		HGCU		Reclaim		Losses		HGCU	to NH3 Conv		90.1%	6
	lb/hr	wt %	lb/hr	wt %	lb/hr	wt %	lb/hr	wt %			lb/hr	lb/mol	wt %	mol %	7
															8
											90,473	6.39	26.26	22.82	9
											4,070	0.29	1.18	14.26	10
											40,487	2.86	11.75	6.50	11
											17,590	1.24	5.11	6.90	12
											7,392	0.52	2.15	3.26	13
											1,466	0.10	0.43	0.34	14
											2,543	0.18	0.74	0.53	15
											748	0.05	0.22	0.09	16
											175,399	12.39	50.91	44.24	17
											3,068	0.22	0.89	0.54	18
											0	0.00	0.00	0.00	19
											119	0.01	0.03	0.03	20
											1,176	0.08	0.34	0.49	21
											0	0.00	0.00	0.00	22
											0	0.00	0.00	0.00	23
											0	0.00	0.00	0.00	24
											0	0.00	0.00	0.00	25
											0	0.00	0.00	0.00	26
											0	0.00	0.00	0.00	27
											344,532	24.34	100.00	100.00	28
															29
											344,532				30
											15,447				31
											89,400				32
															33
															34
	0.260		0.260		0.26		0.260				0.329				35
	0		10,936		17,329		0				2,588.8				36
	0		10,936		16,571		0				2,375.0				37
															38
	154		276		276		323				349				39
															40
	0		0		749		0				214				41
															42
	22.73		42.41		96.39		0.00				818.25				43
															44
	1.73		1.07		1.60		0.16		60.7 Water/steam jacket		120.13				45
															46
	0.00		0.00		4.36		0.00		14.1 Traversing Stirrer		73.69	Gas HHV=	189	Btu/scf	47
												Estimated=	544	Btu/lb	48
	24.46		43.48		102.35		0.16		74.8 Total		1012.07	Calculated=	548	Btu/lb	49
ia & 17 tph (typical) Coal each:				4.0		Unit Output (MWn)			120.8 MWn			BulkGas=	3.97%	H2O	50
												Calc Comb Temp (F)		2045	51
	1,568	13.92	3,009	77.60%	5,119	88.00%					56,736	56,735	0.00%		52
			0	0.00%	465	8.00%					8,527	8,527	0.00%		53
			0	0.00%	116	2.00%					96,979	96,979	0.00%		54
al			0	0.00%	58	1.00%					176,430	176,429	0.00%		55
	0	0.00	0	0.00%	58	1.00%					2,792	2,793	-0.02%		56
			0	0.00%						Sub-Totals	341,463	341,464	0.00%		57
			0	0.00%							Sum of	Sum of Gas	Mass		58
							440	90			Streams	Constituents	Unbalance		59
							10	2			balance check				60
							29	6			FERC Cycle Efficiency(g)= 45.14%				61
							0	0			FERC Cycle Efficiency(n)= 41.72%				62
							10	2							63
	9,694	86.08	869	22.40%			0	0							64
	11,262	100	3,878	100.00%	5,817	100.00%	489	100							65
	11,262		3,878		5,817		489				344,532				66
															67
	3.13		1.08		1.62		0.14				95.70				68
	14.7		350 °		350 °		259				259				69
	650		1120		1120		1300				1120				70

	AE	AF	AG	AH	AI	AJ	AK	AL	AM	AN	AO	AP	AQ	AR
1	**Standardized IGCC Gasifier Cogen Application**													**Reference Coal - I**
2	**Mass & Energy Balance**				**GE 7111 EA**		**Plant**							**Predicted Gasifier Ou**
3	Stream No.		11				12				13	14		
4	Identification		Air				Bleed Air				Bleed Air	Compressor Discharg		
5	From		Atmosphere				Compressor				for	Compressor		
6	To		Gas Turbine Compressor				Booster Compressor Cooler				Coolant	Combustor		
7	Gas	Mol Wt	lb/hr	lb/mol	wt %	mol %	lb/hr	lb/mol	wt %	mol %	lb/hr	lb/hr	lb/mol	wt %
8														
9	CO	28.010	0	0.00	0.00	0.00	0	0.00	0.00	0.00	0	0	0.00	0.00
10	H2	2.016	0	0.00	0.00	0.00	0	0.00	0.00	0.00	0	0	0.00	0.00
11	CO2	44.010	1,092	0.01	0.05	0.03	111	0.01	0.05	0.03	84	898	0.01	0.05
12	H2O	18.015	14,663	0.18	0.64	1.02	1,485	0.18	0.64	1.02	1,127	12,051	0.18	0.64
13	CH4	16.042	0	0.00	0.00	0.00	0	0.00	0.00	0.00	0	0	0.00	0.00
14	C2H6	30.068	0	0.00	0.00	0.00	0	0.00	0.00	0.00	0	0	0.00	0.00
15	H2S	34.076	0	0.00	0.00	0.00	0	0.00	0.00	0.00	0	0	0.00	0.00
16	COS	60.070	0	0.00	0.00	0.00	0	0.00	0.00	0.00	0	0	0.00	0.00
17	N2	28.013	1,730,316	21.65	75.03	77.28	175,286	21.65	75.03	77.28	132,966	1,422,064	21.65	75.03
18	Ar	39.948	30,293	0.38	1.31	0.95	3,069	0.38	1.31	0.95	2,328	24,896	0.38	1.31
19	HCl	36.461	0	0.00	0.00	0.00	0	0.00	0.00	0.00	0	0	0.00	0.00
20	HCN	27.026	0	0.00	0.00	0.00	0	0.00	0.00	0.00	0	0	0.00	0.00
21	NH3	17.030	0	0.00	0.00	0.00	0	0.00	0.00	0.00	0	0	0.00	0.00
22	CS2	76.131	0	0.00	0.00	0.00	0	0.00	0.00	0.00	0	0	0.00	0.00
23	SO2	64.059	0	0.00	0.00	0.00	0	0.00	0.00	0.00	0	0	0.00	0.00
24	NO	30.006	0	0.00	0.00	0.00	0	0.00	0.00	0.00	0	0	0.00	0.00
25	O2	31.999	529,940	6.63	22.98	20.72	53,684	6.63	22.98	20.72	40,723	435,532	6.63	22.98
26	NaCl	58.497	0	0.00	0.00	0.00	0	0.00	0.00	0.00	0	0	0.00	0.00
27	KCl	74.596	0	0.00	0.00	0.00	0	0.00	0.00	0.00	0	0	0.00	0.00
28	Total Gas (lb/hr)		2,306,304	28.86	100.00	100.00	233,635	28.86	100.00	100.00	177,228	1,895,441	28.86	100.00
29														
30	Volumetric Flow Rates (STP 14.7 psia, 59F)													
31	(acfm)		504,631				8,979					72,843		
32	(scfm)		504,631				51,121				39,056	414,732		
33														
34	hgAdiabHeat(BTU/lb)													
35	Cp (BTU/lb F)		0.240				0.254					0.254		
36	HHV (BTU/lb)		0.0				0.0					0.0		
37	LHV (BTU/lb)		0.0				0.0					0.0		
38	Sensible Heat													
39	above 59 F Btu/lb		0				158					158		
40	Latent Heat													
41	of Water Btu/lb		7				7					7		
42														
43	Chemical Heat		0.00				0.00					0.00		
44	(LHV) MBtu/hr													
45	Sensible Heat		0.00				36.85					298.93		
46	above 59 F MBtu/hr													
47	Latent Heat		15.25				1.54					12.53		
48	of Water MBtu/hr													
49	TotalHeat(MBtu/hr)		15.25				38.39					311.46		
50												Parasitic Load		10.48 M
51														
52	C	12.011		298				30			23		245	245
53	H	1.008		1,629				165			125		1,339	1,339
54	O	16.000		543,768				55,085			41,786		446,897	446,897
55	N	14.007		1,730,316				175,286			132,966		1,422,064	1,422,064
56	S	32.060		0				0			0		0	0
57	CL2	35.500		2,276,011	sub-totals			230,566	sub-totals		174,900	sub-totals	1,870,545	1,870,545
58	H2O	18.016												balance check
59	ZnFe2O4													
60	ZnS													
61	FeS													
62	Fe2O3													
63	ZnO													
64	ASH													
65	Total Solids													
66	Total Flow (ppm)		2,306,304				233,635				177,228	1,895,441		
67														
68	Total Flow (pps)		640.64 •				64.90			•	49.23	526.51		
69	Pressure (psia)		14.7 •				184 •					184		
70	Temperature (F)		59 •				681 •					681		

AR	AS	AT	AU	AV	AW	AX	AY	AZ	BA	BB	BC	BD	BE	BF	BG
oal - Illinois #6								J-1538			DE-AC21-89MC26291				1
															2
nsifier Output				Revision 7										10/16/90	3
		15				16					17				4
nor Discharge		Fuel			%H2S	Inlet Gas		Thrml NO (ppm vd)		25	Exhaust Gas				5
nor		HGCU			Removed	GT Combustor		*Rich/Lean Rel. F		85%	Gas Turbine				6
lor		GT Combustor			99.0%	GT Expander									7
wt %	mol %	lb/hr	mol/hr	wt %	mol %	lb/hr	lb/mol	mols	wt %	mol %	lb/hr	mols/hr	wt %	mol %	8
0	0.00	90,473	3,230	26.38	22.84	0	0.00	0.00	0.00	0.00	0	0.00	0.00	0.00	9
0	0.00	4,020	1,994	1.17	14.10	0	0.00	0.00	0.00	0.00	0	0.00	0.00	0.00	10
1	0.05	40,487	920	11.80	6.51	208,384	2.70	0.0021	9.31	6.13	208,468	4736.82	8.63	5.68	11
8	0.64	19,365	1,075	5.65	7.60	88,787	1.15	0.00	3.97	6.38	89,913	4991.03	3.72	5.98	12
0	0.00	7,392	461	2.16	3.26	0	0.00	0.00	0.00	0.00	0	0.00	0.00	0.00	13
0	0.00	1,466	49	0.43	0.34	0	0.00	0.00	0.00	0.00	0	0.00	0.00	0.00	14
0	0.00	25	1	0.01	0.01	0	0.00	0.00	0.00	0.00	0	0.00	0.00	0.00	15
0	0.00	7	0	0.00	0.00	0	0.00	0.00	0.00	0.00	0	0.00	0.00	0.00	16
5	75.03	175,399	6,261	51.14	44.28	1,598,280	20.69	0.0255	71.40	73.84	1,731,246	61801.53	71.67	74.10	17
8	1.31	3,068	77	0.89	0.54	27,965	0.36	0.00	1.25	0.91	30,293	758.30	1.25	0.91	18
0	0.00	0	0	0.00	0.00	0	0.00	0.00	0.00	0.00	0	0.00	0.00	0.00	19
0	0.00	119	4	0.03	0.03	0	0.00	0.00	0.00	0.00	0	0.00	0.00	0.00	20
0	0.00	1,176	69	0.34	0.49	0	0.00	0.00	0.00	0.00	0	0.00	0.00	0.00	21
0	0.00	0	0	0.00	0.00	0	0.00	0.00	0.00	0.00	0	0.00	0.00	0.00	22
0	0.00	0	0	0.00	0.00	56	0.0007	0.0000	0.0025	0.0011	56	0.87	0.00	0.00	23
0	0.00	0	0	0.00	0.00	456	0.0059	0.0000	0.0204	0.0197	456	15.19	0.02	0.02	24
0	0.00	0	0	0.00	0.00	314,516	4.07	0.0044	14.05	12.72	355,239	11101.56	14.71	13.31	25
3	22.98	0	0	0.00	0.00	0	0.00	0.00	0.00	0.00	0	0.00	0.00	0.00	26
0	0.00	0	0	0.00	0.00	0	0.00	0.00	0.00	0.00	0	0.00	0.00	0.00	27
0	0.00	0	0	0.00	0.00	0	0.00	0.00	0.00	0.00	0	0.00	0.00	0.00	28
6	100.00	342,998	14,141	100.00	100.00	2,238,439	28.97	0.0345	100.00	100.00	2,415,667	83405.30	100.00	100.00	29
						2,238,442 bal ck					2,415,670 bal ck				30
															31
		16,012				193,591					1,438,278				32
		89,281				487,816					526,595				33
															34
															35
		0.334				0.278					0.267				36
		2,548.9				0.0					0.0				37
		2,330.0				0.0					0				38
															39
		375				546					251				40
															41
		219				41					39				42
															43
		799.20				0.00					0.00				44
															45
		128.46				1222.06					607.31				46
															47
		75.06				92.34					93.51				48
															49
		1002.71				1314.40	1314.17 bal chk				700.82				50
ad	10.48 MWg		Combustion Turbine Output			84.385 MWg					1.05 Turbine Compressor Surge Margin				51
45	245	0.00%	56,587			56,832	56,832	0.00%			56,855	56,855	0.00%		52
39	1,339	0.00%	8,526			9,865	9,865	0.00%			9,990	9,990	0.00%		53
97	446,897	0.00%	98,360			545,257	545,260	0.00%			587,045	587,045	0.00%		54
64	1,422,064	0.00%	176,429			1,598,493	1,598,493	0.00%			1,731,459	1,731,459	0.00%		55
0	0	0.00%	28			28	28	0.10%			28	28	0.00%		56
45	1,870,545	0.00%	339,930	sub-total		2,210,475	2,210,477	0.00%	sub-total		2,385,377	2,385,377	0.00%	sub-total	57
balance check						balance check					balance check				58
															59
															60
															61
															62
															63
															64
															65
															66
		342,998				2,238,439					2,415,667				67
															68
		95.28				621.79					671.02				69
		259				177 •					15.13				70
		1180				2,020 •					999 •				

	BH	BI	BJ	BK	BL	BM	BN	BO	BP	BQ	BR	BS
1	**Standardized IGCC Gasifier Cogen Application**						**Reference Coal -**			**Illinois #6**		
2	**Mass & Energy Balance**			**GE 7111 EA**			**Predicted Gasifier Output**					
3	Stream No.		18				19	Thrml NO (ppmvd)		25	20	21
4	Identification		Fuel for Supplementary Firing				Flue Gas		SCR Red F	80%	Superheated Steam	Low Pressure Ste
5	From		Gasifier				HRSG		R/L Red F	85%	HRSG	HRSG
6	To		HRSG				Stack		NOx Reburn F	0%	Steam Turbine	Steam Turbine
7	Gas	Mol Wt	lb/hr	lb/mol	wt %	mol%	lb/hr	mols/hr	wt %	mol%	lb/hr	lb/hr
8												
9	CO	28.010	0	6.39	26.26	22.82	0	0.00	0.00	0.00		
10	H2	2.016	0	0.29	1.18	14.26	0	0.00	0.00	0.00		
11	CO2	44.010	0	2.86	11.75	6.50	208,468	4736.82	8.63	5.68		
12	H2O	18.015	0	1.24	5.11	6.90	89,913	4991.03	3.72	5.98		
13	CH4	16.042	0	0.52	2.15	3.26	0	0.00	0.00	0.00		
14	C2H6	30.068	0	0.10	0.43	0.34	0	0.00	0.00	0.00		
15	H2S	34.076	0	0.18	0.74	0.53	0	0.00	0.00	0.00		
16	COS	60.070	0	0.05	0.22	0.09	0	0.00	0.00	0.00		
17	N2	28.013	0	12.39	50.91	44.24	1,731,246	61801.53	71.68	74.11		
18	Ar	39.948	0	0.22	0.89	0.54	30,293	758.30	1.25	0.91		
19	HCl	36.461	0	0.00	0.00	0.00	0	0.00	0.00	0.00		
20	HCN	27.026	0	0.01	0.03	0.03	0	0.00	0.00	0.00		
21	NH3	17.030	0	0.08	0.34	0.49	0	0.00	0.00	0.00		
22	CS2	76.131	0	0.00	0.00	0.00	0	0.00	0.00	0.00	Stack Emissions (lb/MBtu)	
23	SO2	64.059	0	0.00	0.00	0.00	56	0.87	0.00	0.00	0.053	
24	NO	30.006	0	0.00	0.00	0.00	91	3.04	0.00	0.00	0.09	
25	O2	31.999	0	0.00	0.00	0.00	355,239	11101.56	14.71	13.31		
26	NaCl	58.497	0	0.00	0.00	0.00	0	0.00	0.00	0.00		
27	KCl	74.596	0	0.00	0.00	0.00	0	0.00	0.00	0.00		
28	Total Gas (lb/hr)		0	24.34	100.00	100.00	2,415,303	83393.15	100.00	100.00		
29							2,415,305	bal chk				
30	Volumetric Flow Rates (STP 14.7 psia, 59F)											
31	(acfm)		0				721,299					
32	(scfm)		0				526,518					
33												
34	Heat (BTU/lb)										1459.5	
35	Cp (BTU/lb F)		0.334				0.248					
36	HHV (BTU/lb)		2548.9				0.0					
37	LHV (BTU/lb)		2330.0				0					
38	Sensible Heat above											
39	59 F Btu/lb steam		0				48					
40	Latent Heat of											
41	Water Btu/lb steam		0				39					
42												
43	Chemical Heat		0.00				0.00					
44	(LHV) MBtu/hr											
45	Sensible Heat		0.00				114.81					
46	above 59 F MBtu/hr											
47	Latent Heat		0.00				93.51					
48	of Water MBtu/hr											
49	TotalHeat(MBtu/hr)		0.00				208.32				412.72	
50											HRSG Turbine Ou	
51												
52	C	12.011		0			56,855	56,855	0.00%			
53	H	1.008		0			9,990	9,990	0.00%			
54	O	16.000		0			586,851	586,851	0.00%			
55	N	14.007		0			1,731,289	1,731,289	0.00%			
56	S	32.060		0			28	28	0.00%			
57	CL2	35.500		0	sub-total		2,385,013	2,385,013	0.00%	sub-total		
58	H2O	18.016										
59	ZnFe2O4											
60	ZnS											
61	FeS											
62	Fe2O3											
63	ZnO											
64	ASH											
65	Total Solids											
66	Total Flow (pph)		0				2,415,667				282,780	4
67												
68	Total Flow (pps)		0 *				671.02				78.55	
69	Pressure (psia)		259				14.7				1265	
70	Temperature (F)		1180				231 *				935	

BR	BT	BU	BV	BW
	J-1538	DE-AC21-89MC26291		1
	Revision 7		10/16/90	2
21	22	23	24	3
Pressure Steam	Make Up Water	Sat. Steam	Process Stm	4
HRSG	WaterTreatment	Gasifier	Stm Turbine	5
eam Turbine	HRSG	Steam Turbine	Process Facility	6
lb/hr	lb/hr	lb/hr	lb/hr	7
				8
				9
				10
				11
				12
				13
				14
				15
				16
				17
				18
				19
				20
				21
				22
				23
				24
				25
				26
				27
				28
				29
				30
				31
				32
				33
1237.9	48	1204	1214.5	34
				35
				36
				37
				38
				39
				40
				41
				42
				43
				44
				45
				46
				47
				48
61.87	1.76	60.69	23.68	49
Turbine Output	46.9	MWg		50
				51
				52
				53
				54
				55
				56
				57
				58
				59
				60
				61
				62
				63
				64
				65
49,979	36,736	59,730	19,500	66
				67
13.88	10.20	16.59	5.42	68
115	15	350	250	69
423	80	432	420	70

	BX	BY	BZ	CA	CB	CC	CD	CE	CF	CG	CH	CI
1	Standardized IGCC Gasifier Cogen Application								Reference Coal -			Illinois #6
2	Mass & Energy Balance				GE 7111 EA				Predicted Gasifier Output			
3	Stream No.		25		26					27		27a
4	Identification		Regen Recycle Loop		Conc SO2 Bleed					Elemental Sulfur		Elemental Sulfur
5	From		Recycle Blower		Regen Loop					Resox Process		DSRP
6	To		Regenerator		SRP					Marketable Byproduct		Marketable Byprod
7	Gas	Mol Wt	lb/hr	wt%	lb/hr	lbs/mol	mols/hr	wt%	mol%	lb/hr	wt%	lb/hr
8												
9	CO	28.010			0	0.00	0.00	0.00	0.00			
10	H2	2.016			0	0.00	0.00	0.00	0.00			
11	CO2	44.010	141	0.05	12	0.02	0.27	0.05	0.04			
12	H2O	18.015	1,756	0.62	146	0.20	8.12	0.62	1.11			
13	CH4	16.042			0	0.00	0.00	0.00	0.00			
14	C2H6	30.068			0	0.00	0.00	0.00	0.00			
15	H2S	34.076			0	0.00	0.00	0.00	0.00			
16	COS	60.070			0	0.00	0.00	0.00	0.00			
17	N2	28.013	212,397	74.87	17,700	24.10	631.84	74.87	86.02			
18	Ar	39.948	0	0.00	0	0.00	0.00	0.00	0.00			
19	HCl	36.461			0	0.00	0.00	0.00	0.00			
20	HCN	27.026			0	0.00	0.00	0.00	0.00			
21	NH3	17.030			0	0.00	0.00	0.00	0.00			
22	CS2	76.131			0	0.00	0.00	0.00	0.00			
23	SO2	64.059	66,311	23.37	5,526	7.52	86.26	23.37	11.74			
24	NO	30.006			0	0.00	0.00	0.00	0.00			
25	O2	31.999	3,081	1.09	257	0.35	8.02	1.09	1.09			
26	NaCl	58.497			0	0.00	0.00	0.00	0.00			
27	KCl	74.596			0	0.00	0.00	0.00	0.00			
28	Total Gas (lb/hr)		283,686	100.00	23,640	32.19	735	100.00	100.00			
29												
30	Volumetric Flow Rates		(STP 14.7 psia, 59 F)									
31	(acfm)		9,972		786							
32	(scfm)		55,650		4,637							
33												
34	Heat (BTU/lb)											
35	Cp (BTU/lb F)		0.240		0.240					0.000		
36	HHV (BTU/lb)											
37	LHV (BTU/lb)											
38	Sensible Heat above											
39	59 F Btu/lb steam											
40	Latent Heat of											
41	Water Btu/lb steam											
42												
43	Chemical Heat									11.00		
44	(LHV) MBtu/hr											
45	Sensible Heat		91.30		7.04					0.00		
46	above 59 F MBtu/hr											
47	Latent Heat		1.83		0.15					0.00		
48	of Water MBtu/hr											
49	TotalHeat(MBtu/hr)		93.13		7.19					11.00		
50												
51												
52	C	12.011										
53	H	1.008										
54	O	16.000										
55	N	14.007										
56	S	32.060								2,763		
57	CL2	35.500										
58	H2O	18.016										
59	ZnFe2O4											
60	ZnS											
61	FeS											
62	Fe2O3											
63	ZnO											
64	ASH				0.00			0				
65	Total Solids											
66	Total Flow (pph)		283,686		23,640					2,763		
67												
68	Total Flow (pps)		78.80		6.57					0.77		
69	Pressure (psia)		294		294					15		
70	Temperature (F)		1400		1300					284		

CI	CJ	CK	CL	CM
#6	J-1538	DE-AC21-89MC26291		1
	Revision 7		10/16/90	2
27a	27b	28		3
nial Sulfur	Sulfur Dioxide	Ash		4
NRP	SO2 Recovery Unit	SO2 Reductor		5
ble Byproduct	Marketable Byproduct	Disposal		6
lb/hr	lb/hr	lb/hr	wt %	7
				8
				9
				10
				11
				12
				13
				14
				15
				16
				17
				18
				19
				20
				21
				22
				23
				24
				25
				26
				27
				28
				29
				30
				31
				32
				33
				34
0.000	0.000			35
				36
				37
				38
		154	0	39
				40
				41
				42
11.00	11.00	3.97	0	43
				44
0.00	0.00	0.00	0	45
				46
0.00	0.00	0.00	0	47
				48
11.00	11.00	3.97	0.4	49
				50
				51
		274	3	52
				53
				54
				55
2,763	2,763			56
				57
				58
				59
				60
				61
				62
				63
		9,694	97	64
		9,968	100	65
2,763	5,526	9,968	100	66
				67
0.77	1.53	2.77		68
15	100	15		69
180	59	284		70

100 MW Cogen Cycle
Asea Brown Boveri GT 11N

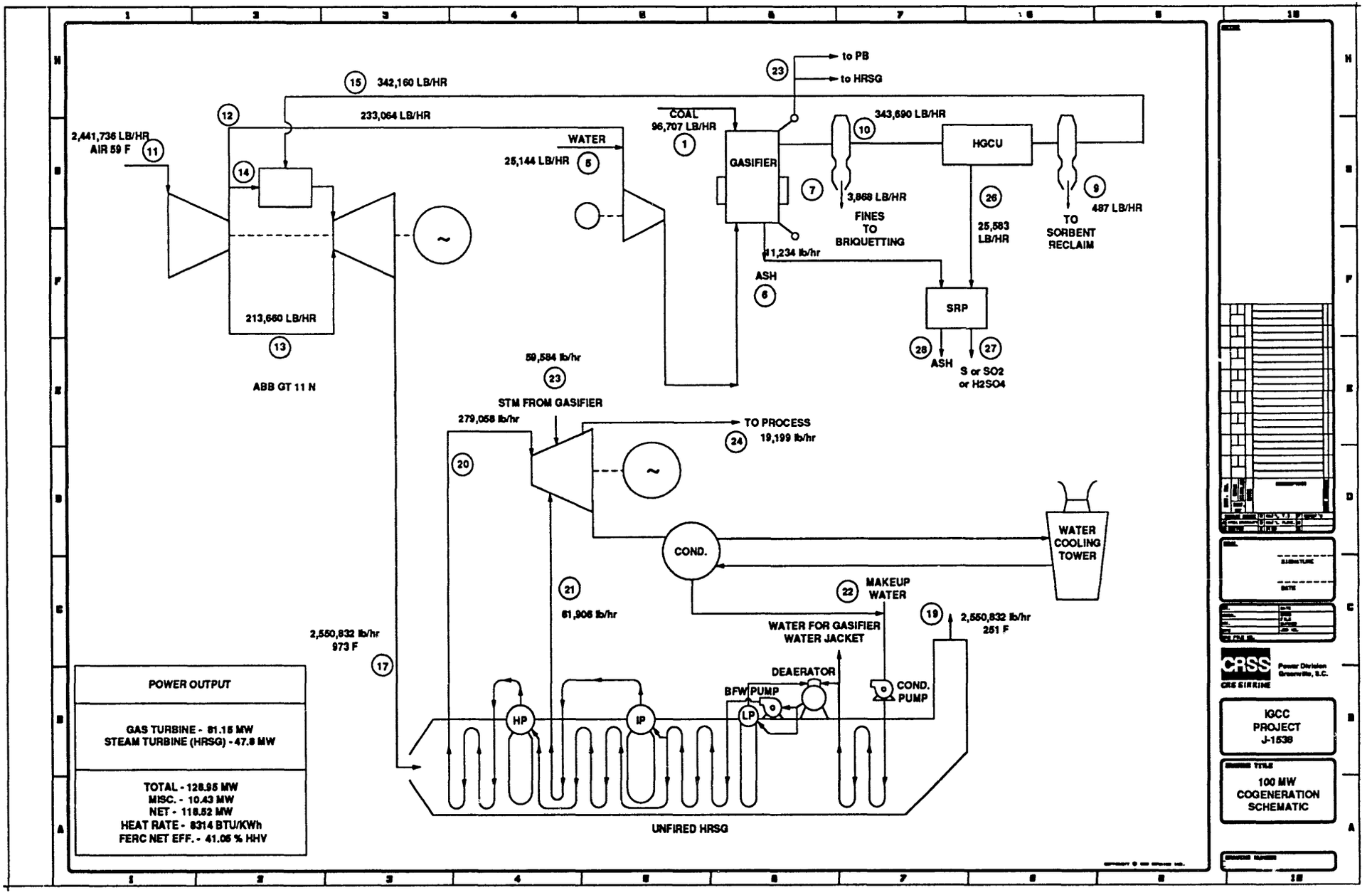
to PB
to HRSG
342,160 LB/HR
233,064 LB/HR
2,441,736 LB/HR
AIR 59 F
COAL
96,707 LB/HR
WATER
25,144 LB/HR
GASIFIER
343,690 LB/HR
HGCU
3,868 LB/HR
FINES
TO
BRIQUETTING
25,583
LB/HR
487 LB/HR
TO
SORBENT
RECLAIM
11,234 lb/hr
ASH
SRP
ASH
S or SO2
or H2SO4
213,660 LB/HR
ABB GT 11 N
59,584 lb/hr
STM FROM GASIFIER
279,058 lb/hr
TO PROCESS
19,199 lb/hr
COND.
WATER
COOLING
TOWER
MAKEUP
WATER
61,906 lb/hr
2,550,832 lb/hr
251 F
WATER FOR GASIFIER
WATER JACKET
2,550,832 lb/hr
973 F
DEAERATOR
BFW PUMP
COND.
PUMP
HP
IP
LP
UNFIRED HRSG
POWER OUTPUT
GAS TURBINE - 81.15 MW
STEAM TURBINE (HRSG) - 47.8 MW
TOTAL - 128.95 MW
MISC. - 10.43 MW
NET - 118.52 MW
HEAT RATE - 8314 BTU/KWh
FERC NET EFF. - 41.06 % HHV
CRSS
CRS SIRRINE
Power Division
Greenville, S.C.
IGCC
PROJECT
J-1538
100 MW
COGENERATION
SCHEMATIC

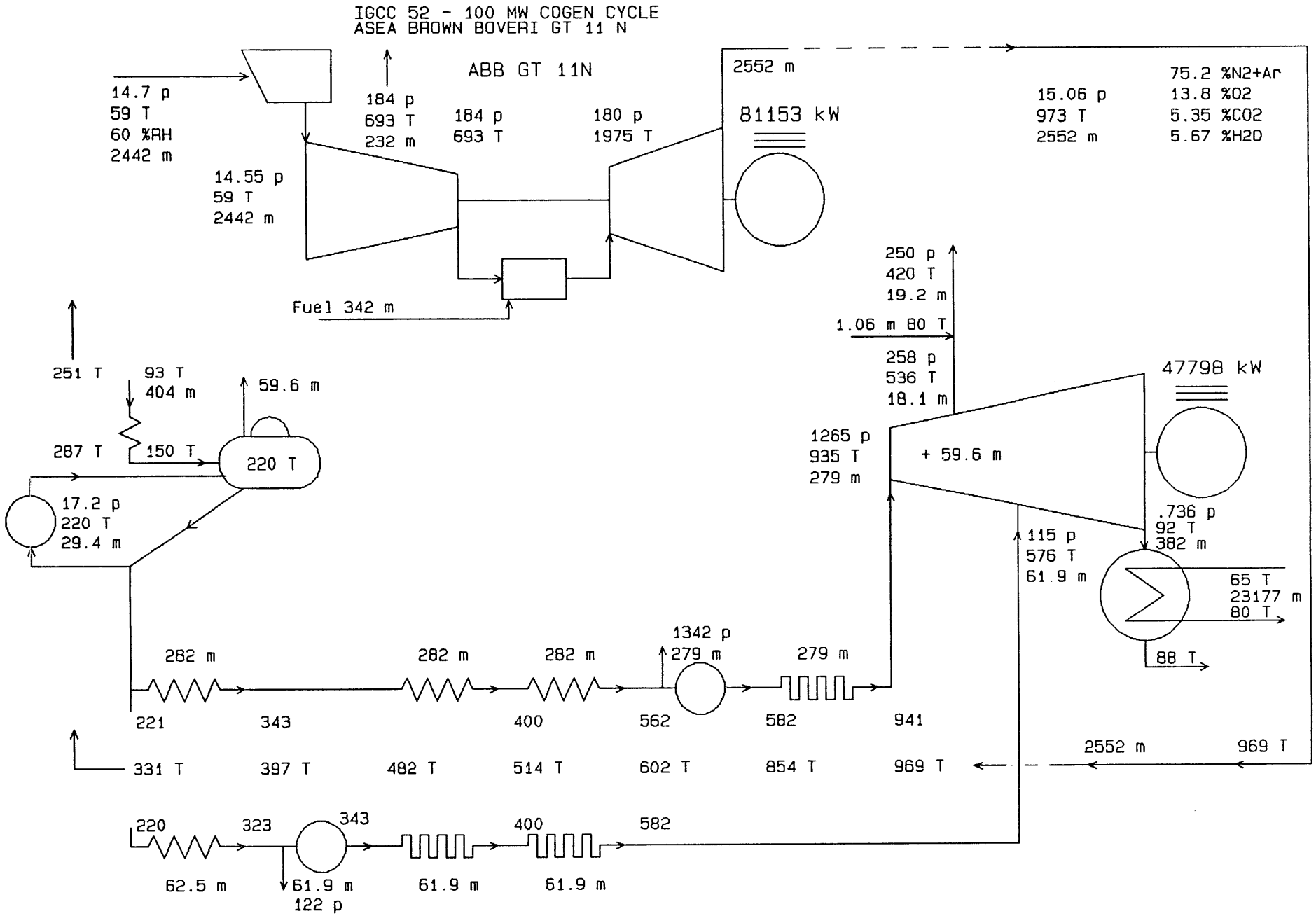
IGCC 52 - 100 MW COGEN CYCLE
ASEA BROWN BOVERI GT 11 N
ABB GT 11N
14.7 p
59 T
60 %RH
2442 m
184 p
693 T
232 m
184 p
693 T
180 p
1975 T
2552 m
81153 kW
15.06 p
973 T
2552 m
75.2 %N2+Ar
13.8 %O2
5.35 %CO2
5.67 %H2O
14.55 p
59 T
2442 m
Fuel 342 m
250 p
420 T
19.2 m
1.06 m 80 T
258 p
536 T
18.1 m
47798 kW
251 T
93 T
404 m
59.6 m
287 T
150 T
220 T
17.2 p
220 T
29.4 m
1265 p
935 T
279 m
+ 59.6 m
.736 p
92 T
382 m
115 p
576 T
61.9 m
65 T
23177 m
80 T
88 T
282 m
282 m
282 m
1342 p
279 m
279 m
221
343
400
562
582
941
2552 m
969 T
331 T
397 T
482 T
514 T
602 T
854 T
969 T
220
323
343
400
582
62.5 m
61.9 m
122 p
61.9 m
61.9 m
GTPRO 3.31 Michael Brown 10-15-1990 13:34:03
p psia, T F, m kpph

IGCC 52 - 100 MW COGEN CYCLE
ASEA BROWN BOVERI GT 11 N

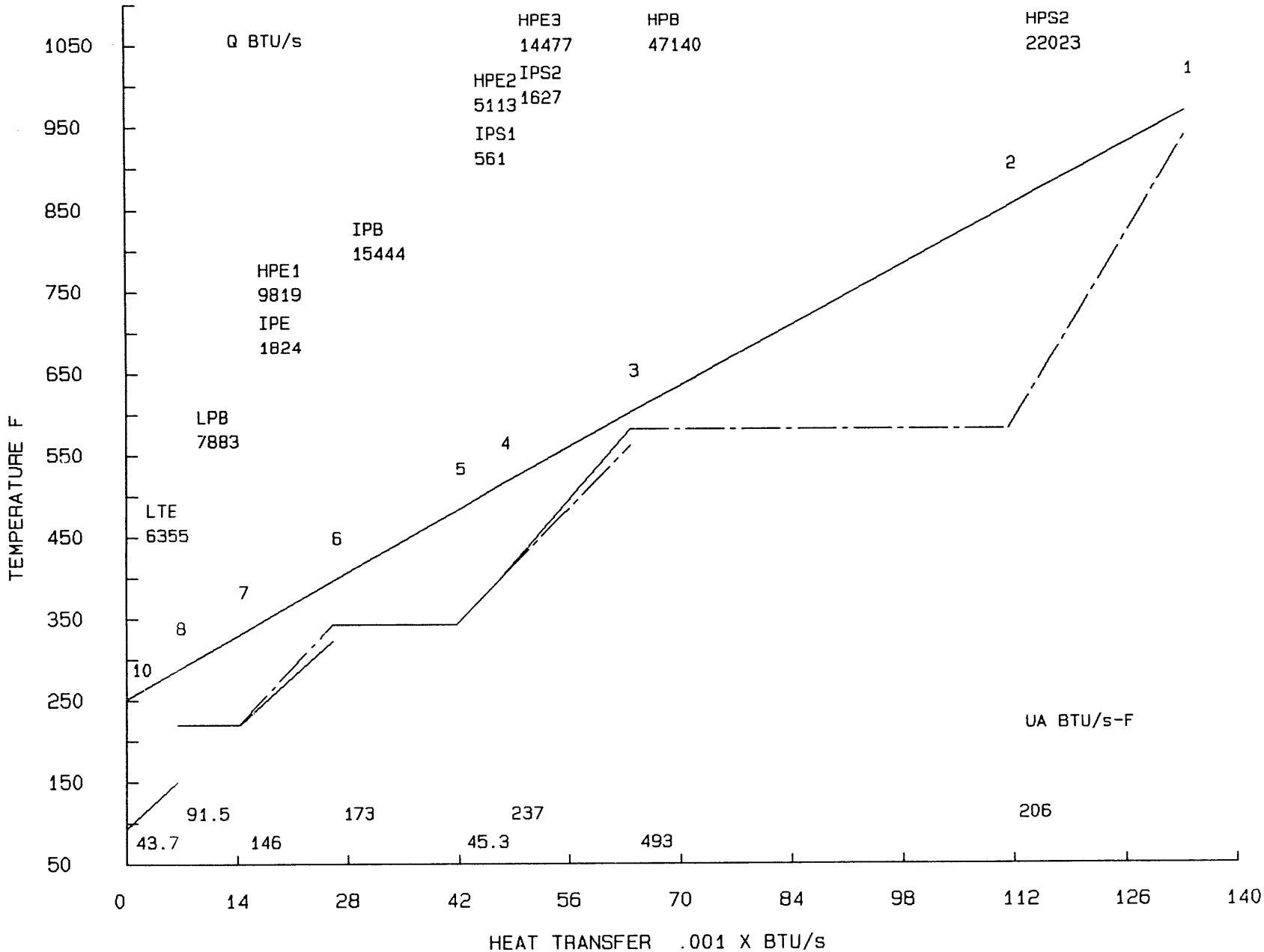

GTPRO 3.31 Michael Brown 10-15-1990 13:34:03

:TPRO 3.31 Michael Brown 10-15-1990 13:33:37
GCC 52 - 100 MW COGEN CYCLE
GEA BROWN BOVERI GT 11 N

ESTIMATED G.T. SITE PERFORMANCE

Fuel=Fuel G.T. @ 100 % rating, XIGV= 0
Site ambient conditions: 14.7 psia, 59 F, 60 % RH
Inlet loss= 4 inch H2O, exhaust loss= 10 inch H2O
Evap. inlet cooler to 0 % RH.

G.T. DEVIATION FROM NOMINAL, CLEAN ENGINE

Compressor inlet airflow % reduction = 0
Compressor efficiency reduction % = 0
Turbine efficiency reduction % = 0
Maximum firing temperature excess over base load = 0 F
Combustor % pressure loss (0 means nominal value) = 0
Combustor inefficiency + heat loss % (0 means nominal value) = 0
Cooling air increase % (0 means nominal value) = 0
Process air bleed location (0 means none) = 1
Process air bleed % of inlet = 9.5

#	Model	PR	TIT F	TET F	Mair kpph	kWe	H.R.LHV BTU/kWh	Mex kpph	N2+Ar %	O2 %	CO2 %	H2O %
35	BB GT 11N	12.7	1975	973	2442	81153	11399	2552	75.20	13.78	5.35	5.67

Fuel flow = 342 kpph
G.T. auxillary power = 408 kWe.

ESTIMATED G.T. CYCLE

STREAM	TEMP. F	PRESS. psia	MASSFLOW kpph	M.W.	MOLE COMPOSITION % N2+Ar	O2	CO2	H2O
Ambient air in	59	14.70	2441.75	28.75	78.22	20.74	0.03	1.01
Compr. inlet	59	14.55	2441.75	28.75	78.22	20.74	0.03	1.01
Turbine coolant	misc.		213.65					
Process air bld	693	184.33	231.97	28.75	78.22	20.74	0.03	1.01
Compr. disch.	693	184.33	1996.14	28.75	78.22	20.74	0.03	1.01
Turbine inlet	1975	179.73	2338.30	28.86	74.92	13.14	5.84	6.10
Turbine exhaust	973	15.06	2551.94	28.85	75.20	13.78	5.35	5.67

Compressor= 111077 Turbine= 194931 Mech. loss= 664 kW
Turbine coolant= 8.75 % compr in
GT specific power @ gen term= 33.2 kW per kpph
GT efficiency @ gen term= 27.54 % HHV = 29.93 % LHV

GAS TURBINE/GENERATOR HEAT BALANCE

Energy in = 288255 BTU/s

Inlet air Sensible	Inlet air Latent	Water Inj.	Steam Inj.	Fuel HHV
4466	4516	0	0	279274

Energy out = 289915 BTU/s

Incompl comb & carcass rad	GT Mech. Losses	Gearbox Loss	Generator Loss	Exhaust Sensible	Exhaust Latent	Electric Output	Proc Air
1028	422	0	1181	172966	26395	76923	11001

Zero enthalpy: dry gases & liquid water @ 32 F (273.15 K)
Heat Balance Error = In - Out =-1660 BTU/s =-.576 %

GTPRO 3.31 Michael Brown 10-15-1990 13:33:44 Steam cycle p.1
IGCC 52 - 100 MW COGEN CYCLE
ASEA BROWN BOVERI GT 11 N
Type: 6 Subtype: 2 Induction

	p psia	T F	h BTU/lb	m kpph	UA BTU/s-F	Q BTU/s	A sq.ft
Cnd rtrn	0.74	87.57	55.58	382.397			
Stm rtrn	17.72	250.00	218.49	14.400			
Makeup	17.72	80.00	48.02	8.210	(Includes 1.06	kpph	for desup)
FW supl	17.72	93.26	61.25	403.951			
LTE				403.951	44	6355	20205
from LTE	17.20	150.00	117.88	403.951			
LPB				29.395	91	7883	38977
water bleed				59.580			
ntd. FW	17.20	220.00	188.13	344.371			
HPFW	1423.77	221.13	193.48	281.848			
HPE1				281.848	126	9819	56330
6	1382.30	342.54	318.89	0.000			
HPE2				281.848	41	5113	17763
7	1362.17	399.84	384.20	0.000			
HPE3				281.848	207	14477	88712
8	1342.04	562.08	569.12	0.000			
Blwdn	1342.04	582.08	591.91	2.791			
HPB				279.057	493	47140	193470
9	1342.04	582.08	1177.03	0.000			
HPS1				279.057	0	0	0
10	1342.04	582.08	1177.03	0.000			
H[illegible]				279.057	206	22023	102400
11	1302.95	941.00	1461.14	0.000			
Into HPT	1265.00	935.00	1458.99	279.057			
bef addn	350.00	630.40	1330.20	279.057			
HPT addn	350.00	432.00	1204.98	59.580			
aft addn	350.00	589.71	1308.16	338.637			
HPT bld.	257.50	536.34	1285.74	18.144			
Desuperhtr				1.056			
HPT proc	250.00	420.00	1214.85	19.200			
HPT exit	115.00	389.65	1219.45	320.493			
IPFW	125.66	220.09	188.55	62.524			
IPE				62.524	20	1824	9026
1	122.00	322.54	293.59	0.000			
Blwdn	122.00	342.54	314.10	0.619			
IPB				61.905	173	15444	71368
2	122.00	342.54	1191.52	0.000			
IPS1				61.905	4	561	2374
3	122.00	399.84	1224.17	0.000			
IPS2				61.905	30	1627	15876
4	118.45	582.08	1318.77	0.000			
Into LPT	115.00	417.45	1235.04	382.397			
LPT exit	0.74	91.57	964.72	382.397			

STEAM TURBINE

	No. of steps	Exit Quality	Efficiency(%)	Work (kW)
To HPT additn	4	1.157		
To HPT bleed	1	1.101		
To HPT exit	3	1.033	81.66	18984
To LPT exit	13	0.869	81.47	30292

Gross power = 49276 kW. Mech/Elect losses = 1478 kW.
Generator output = 47798 kWe. ST auxiliaries = 335 kWe
Boiler feedpumps = 502 kWe

CONDENSER

	p psia	T F	h BTU/lb	m kpph
LPT exit	0.7365	91.57	964.72	382.40
Saturation	0.7365	91.57		
Condensate well	0.7365	87.57	55.58	382.40
Cooling water in		65.00		23177.06
Cooling water out		80.00		23177.06

Number of passes= 1 UA= 5360 BTU/s-F Surface area = 26219 sq.ft
Tubes: OD = 1 in Length= 38.6 ft number= 2596
Cooling water: Velocity= 9 ft/s DP = 9.02 psia Pumps = 261 kWe.

STEAM CYCLE HEAT BALANCE

Energy in = 220712 BTU/s

GT Exhaust Sensible	GT Exhaust Latent	Duct Burner Fuel HHV	Makeup+Proc Return	Pump Work	External Steam
172966	26395	0	983	426	19942

Energy out = 220713 BTU/s

Heat Radiated	Blow down	Mech/Elec Losses	Stack Sens.	Stack Latent	Condnsr C.W.	Process Steam	GT Injec.	Proc. Water	Electric Output
2336	513	1401	38598	26395	96571	6479	0	3114	45307

Zero enthalpy: dry gases & liquid water @ 32 F (273.15 K)
Heat Balance Error = In - Out =-.875 BTU/s = 0 %

HRSG GAS-SIDE PROFILE

U	Tg F	Tw F HP/IP	DT F HP/IP	Qg/UA F	DELTA P inch H2O	UA BTU/s-F	Qg BTU/s	Vg ft/s	Tube Rows	Lngth ft
1	969.5	941.0	28.5							
				108.0	2.0	205.9	22243.0	56.6	7.8	3.3
	854.5	582.1	272.4							
2	854.5	582.1	272.4							
				96.7	3.2	492.6	47611.8	49.0	14.8	6.2
	602.1	582.1	20.0							
3	602.1	562.1	40.0							
3	602.1	582.1	20.0							
				68.5	1.5	237.4	16265.2	42.0	8.0	3.3
	513.8	399.8	114.0							
	513.8	399.8	114.0							
4	513.8	399.8	114.0							
4	513.8	399.8	114.0							
				126.5	0.3	45.3	5731.2	39.5	1.5	0.6
	482.5	342.5	139.9							
	482.5	342.5	139.9							
5	482.5	342.5	139.9							
				90.3	0.8	172.8	15598.5	37.1	5.5	2.3
	396.5	342.5	54.0							
6	396.5	342.5	54.0							
6	396.5	322.5	74.0							
				80.5	0.7	146.1	11759.5	34.0	5.0	2.1
	331.2	221.1	110.1							
	331.2	220.1	111.1							
7	331.2	220.0	111.2							
				87.0	0.4	91.5	7961.5	31.7	3.0	1.2
	286.7	220.0	66.7							
8	286.7	150.0	136.7							
				146.8	0.2	43.7	6418.3	30.0	1.5	0.6
	250.6	93.3	157.4							

Duct burner fuel= 0 kpph
Gas mole composition: 75.2 %N2+Ar 13.8 %O2 5.35 %CO2 5.67 %H2O .002 %SO2
Flue gas dew point = 96 F M.W.= 28.9

HRSG TOTALS	Economisers	Evaporators	Superheaters	TOTAL
Q BTU/s	37588	70467	24211	132266
UA BTU/s-F	438	757	241	1435
A sq.ft	192037	303815	120651	616502

Prime surface= 35862 fin surface= 580640 sq.ft. Averaged fin eff.= .729
HRSG frontal area = 863 sq.ft. Gas mass flux= 5.87 kpph/sq.ft
HRSG length = 19.7 ft, 47.2 tube rows, 2072 ft of tubes per row.
2 in dia. tubes with serrated fins, staggered arrangement.
Fin thickness/dia.= .03 , height/dia.= .4 , spacing/dia.= .07
Tube transverse pitch/dia.= 2.5 , row longitudinal pitch/dia.= 2.5

ABB GT 11N

Water cooling

air to coal ratio	2.41	air pressure	184	Cp air	0.248
water coal ratio	0.139	air temperature	693	Cp water	1.000
air to water ratio	17.34	water temperature	80	Cp steam	0.455

	lb	wt %	mols	mol %	partial pressure
air	17.34	94.55%	0.60	91.57%	168.48
water	1.00	5.45%	0.06	8.43%	15.52

sat temp 214.6

Temperature of combined stream entering boost compressor

400.19 F sat pressure 247 psia Rel. Hum. 6.28%

Temperature of stream exiting compressor (85% comp eff)

Tf = Ti + (Ti/n*{(Pf/Pi)^((k-1)/k)-1})

where
Ti - inlet temperature - 400.19 F - 860.19 R
n - efficiency - 85.00%
k - ratio of specific heat @ constant pressure to specific
to specific heat @ constant volume 1.384
Pf - final pressure 350 psia
Pi - initial pressure 184 psia

Tf = 597.84 F

	A	B	C	D	E	F	G	H	I	J	K	L	M	N	O
1	Standardized IGCC Gasifier Cogen Application													Reference Coal -	
2	Mass & Energy Balance					ABB GT 11N		Plant		Full Load				Predicted Gasifier Ou	
3	Stream No.			1		2		3			4			5	
4	Identification			AR Coal		Coal Fines		Sized Coal		CompAir@	2.41 A/C			Water @	0.26
5	From			Illinois #6		Sizer @	30%	Combined Streams		Aux Compr &/or Booster Compr				Cooling Water	H2O
6	To			Sizer		Briquetting		Gasifier		Gasifier				Gasifier	Coal
7	Gas	Mol Wt		lb/hr	wt %	lb/hr	wt %	lb/hr	wt %	lb/hr	lb/mol	wt %	mol%	lb/hr	
8															
9	CO	28.010								0	0.00	0.00	0.00		
10	H2	2.016								0	0.00	0.00	0.00		
11	CO2	44.010								110	0.01	0.05	0.03		
12	H2O	18.015								1,482	0.18	0.64	1.02	25,144	
13	CH4	16.042								0	0.00	0.00	0.00		
14	C2H6	30.068								0	0.00	0.00	0.00		
15	H2S	34.076								0	0.00	0.00	0.00		
16	COS	60.070								0	0.00	0.00	0.00		
17	N2	28.013								174,857	21.65	75.03	77.28		
18	Ar	39.948								3,061	0.38	1.31	0.95		
19	HCl	36.461								0	0.00	0.00	0.00		
20	HCN	27.026								0	0.00	0.00	0.00		
21	NH3	17.030								0	0.00	0.00	0.00		
22	CS2	76.131								0	0.00	0.00	0.00		
23	SO2	64.059								0	0.00	0.00	0.00		
24	NO	30.006								0	0.00	0.00	0.00		
25	O2	31.999								53,553	6.63	22.98	20.72		
26	NaCl	58.497								0	0.00	0.00	0.00		
27	KCl	74.596								0	0.00	0.00	0.00		
28	Total Gas (lb/hr)									233,064	28.86	100.00	100.00	25,144	
29															
30	Volumetric Flow Rates (STP 14.7 psia, 59F)														
31	(acfm)									4,366					
32	(scfm)									50,996					
33															
34	Heat (BTU/lb)													1332	
35	Cp (BTU/lb F)									0.251					
36	HHV (BTU/lb)			10,776		10,776		10,776		0					
37	LHV (BTU/lb)			10,239		10,239		10,260		0					
38	Sensible Heat above														
39	59 F Btu/lb steam			0		0		0		135					
40	Latent Heat of														
41	Water Btu/lb steam									7					
42															
43	Chemical Heat			990.19		297.06		1031.98		0.00					
44	(LHV) MBtu/hr														
45	Sensible Heat			0.00		0.00		0.00		31.50					
46	above 59 F MBtu/hr														
47	Latent Heat			51.93		15.58		51.93		1.54					
48	of Water MBtu/hr														
49	TotalHeat(MBtu/hr)			1042.11		312.63		1083.90		33.04				33.49	
50				Number of Gasifiers for 85% Plant Availability @90% Gasifier Availability,										350	psia
51															
52	C	12.011		58,131	60.11%	17,439	60.11%	61,132	60.78%		30				
53	H	1.008		4,033	4.17%	1,210	4.17%	4,033	4.01%		165			2,794	
54	O	16.000		7,321	7.57%	2,196	7.57%	7,321	7.28%		54,951			22,350	
55	N	14.007		1,141	1.18%	342	1.18%	1,141	1.13%		174,857			25,144	Total
56	S	32.060		2,785	2.88%	836	2.88%	2,785	2.77%		230,003	Total			
57	CL2	35.500		0	0.00%	0	0.00%	0	0.00%						
58	H2O	18.016		13,636	14.10%	4,091	14.10%	13,636	13.56%						
59	ZnFe2O4														
60	ZnS														
61	FeS														
62	Fe2O3														
63	ZnO														
64	ASH			9,671	10.00%	2,90[illegible]	10.00%	10,537	10.48%						
65	Total Solids			96,707	100.01%	29,012	100.01%	100,585	100.00%						
66	Total Flow (pph)			96,707 *		29,012		100,585		233,064				25,144	
67															
68	Total Flow (pps)			26.86		8.06		27.94		64.74				6.98	
69	Pressure (psia)			14.7		14.7		14.7		350 *				350 *	
70	Temperature (F)			59		59		59		598 *				598 *	

O	P	Q	R	S	T	U	V	W	X	Y	Z	AA	AB	AC	AD
l -	Illinois #6								J-1538		DE-AC21-89MC26291				1
fier Output			10/16/90				Revision 7								2
	6	Uncomb	7		8		9				10	55 scf/lb of coal			3
0.26	Ash	Carbon	Fines (Char)		Tar		Dust(per RTI dia)		Miscellaneous		Hot Gas with Tars				4
er H2O/	Gasifier	2.69%	Gasifier @	4.00%	Gasifier @	6.00%	Final Cyclone		Gasifier Heat		Gasifier	N2 in coal			5
Coal	Ash Silo		Briquetting		HGCU		Reclaim		Losses		HGCU	to NH3 Conv		90.1%	6
	lb/hr	wt %	lb/hr	wt %	lb/hr	wt %	lb/hr	wt %			lb/hr	lb/mol	wt %	mol %	7
															8
											90,252	6.39	26.26	22.82	9
											4,060	0.29	1.18	14.26	10
											40,388	2.86	11.75	6.50	11
,144											17,547	1.24	5.11	6.90	12
											7,374	0.52	2.15	3.26	13
											1,462	0.10	0.43	0.34	14
											2,537	0.18	0.74	0.53	15
											746	0.05	0.22	0.09	16
											174,970	12.39	50.91	44.24	17
											3,061	0.22	0.89	0.54	18
											0	0.00	0.00	0.00	19
											119	0.01	0.03	0.03	20
											1,173	0.08	0.34	0.49	21
											0	0.00	0.00	0.00	22
											0	0.00	0.00	0.00	23
											0	0.00	0.00	0.00	24
											0	0.00	0.00	0.00	25
											0	0.00	0.00	0.00	26
											0	0.00	0.00	0.00	27
,144											343,690	24.34	100.00	100.00	28
															29
											343,690				30
											15,409				31
											89,181				32
															33
1332															34
	0.260		0.260		0.26		0.260				0.329				35
	0		10,936		17,329		0				2,588.8				36
	0		10,936		16,571		0				2,375.0				37
															38
	154		276		276		323				349				39
															40
	0		0		749		0				214				41
															42
	22.67		42.30		96.15		0.00				816.25				43
															44
	1.73		1.07		1.60		0.16		60.5 Water/steam		119.84				45
									jacket						46
	0.00		0.00		4.34		0.00		14.1 Traversing		73.51	Gas HHV=	189	Btu/scf	47
									Stirrer			Estimated=	528	Btu/lb	48
33.49	24.40		43.37		102.10		0.16		74.6 Total		1009.60	Calculated=	533	Btu/lb	49
psia & 17 tph (typical) Coal each:				4.0		Unit Output (MWn)			118.5 MWn			BulkGas=	3.82%	H2O	50
												Calc Comb Temp (F)		1990	51
	1,564	13.92	3,002	77.60%	5,106	88.00%					56,597	56,597	0.00%		52
4,794			0	0.00%	464	8.00%					8,506	8,507	0.00%		53
2,350			0	0.00%	116	2.00%					96,742	96,742	0.00%		54
3,144 Total			0	0.00%	58	1.00%					175,998	175,998	0.00%		55
	0	0.00	0	0.00%	58	1.00%					2,785	2,786	-0.02%		56
			0	0.00%						Sub-Totals	340,629	340,629	0.00%		57
			0	0.00%							Sum of	Sum of Gas	Mass		58
							439	90			Streams	Constituents	Unbalance		59
							10	2			balance check				60
							29	6			FERC Cycle Efficiency(g)= 44.47%				61
							0	0			FERC Cycle Efficiency(n)= 41.05%				62
							10	2							63
	9,671	86.08	866	22.40%			0	0							64
	11,234	100	3,868	100.00%	5,802	100.00%	487	100							65
,144	11,234		3,868		5,802		487				343,690				66
															67
6.98	3.12		1.07		1.61		0.14				95.47				68
350 *	14.7		350 *		350 *		259				259				69
598 *	650		1120		1120		1300				1120				70

	AE	AF	AG	AH	AI	AJ	AK	AL	AM	AN	AO	AP	AQ	AR
1	**Standardized IGCC Gasifier Cogen Application**											**Reference Coal -**		**Il**
2	**Mass & Energy Balance**			**ABB GT 11N**		**Plant**						**Predicted Gasifier Ou**		
3	Stream No.			11				12			13	14		
4	Identification			Air				Bleed Air			Bleed Air	Compressor Discharge		
5	From			Atmosphere				Compressor			for	Compressor		
6	To			Gas Turbine Compressor				Booster Compressor Cooler			Coolant	Combustor		
7	Gas	Mol Wt	lb/hr	lb/mol	wt %	mol %	lb/hr	lb/mol	wt %	mol %	lb/hr	lb/hr	lb/mol	wt %
8														
9	CO	28.010	0	0.00	0.00	0.00	0	0.00	0.00	0.00	0	0	0.00	0.00
10	H2	2.016	0	0.00	0.00	0.00	0	0.00	0.00	0.00	0	0	0.00	0.00
11	CO2	44.010	1,156	0.01	0.05	0.03	110	0.01	0.05	0.03	101	945	0.01	0.05
12	H2O	18.015	15,524	0.18	0.64	1.02	1,482	0.18	0.64	1.02	1,358	12,684	0.18	0.64
13	CH4	16.042	0	0.00	0.00	0.00	0	0.00	0.00	0.00	0	0	0.00	0.00
14	C2H6	30.068	0	0.00	0.00	0.00	0	0.00	0.00	0.00	0	0	0.00	0.00
15	H2S	34.076	0	0.00	0.00	0.00	0	0.00	0.00	0.00	0	0	0.00	0.00
16	COS	60.070	0	0.00	0.00	0.00	0	0.00	0.00	0.00	0	0	0.00	0.00
17	N2	28.013	1,831,924	21.65	75.03	77.28	174,857	21.65	75.03	77.28	160,299	1,496,767	21.65	75.03
18	Ar	39.948	32,072	0.38	1.31	0.95	3,061	0.38	1.31	0.95	2,806	26,204	0.38	1.31
19	HCl	36.461	0	0.00	0.00	0.00	0	0.00	0.00	0.00	0	0	0.00	0.00
20	HCN	27.026	0	0.00	0.00	0.00	0	0.00	0.00	0.00	0	0	0.00	0.00
21	NH3	17.030	0	0.00	0.00	0.00	0	0.00	0.00	0.00	0	0	0.00	0.00
22	CS2	76.131	0	0.00	0.00	0.00	0	0.00	0.00	0.00	0	0	0.00	0.00
23	SO2	64.059	0	0.00	0.00	0.00	0	0.00	0.00	0.00	0	0	0.00	0.00
24	NO	30.006	0	0.00	0.00	0.00	0	0.00	0.00	0.00	0	0	0.00	0.00
25	O2	31.999	561,059	6.63	22.98	20.72	53,553	6.63	22.98	20.72	49,095	458,412	6.63	22.98
26	NaCl	58.497	0	0.00	0.00	0.00	0	0.00	0.00	0.00	0	0	0.00	0.00
27	KCl	74.596	0	0.00	0.00	0.00	0	0.00	0.00	0.00	0	0	0.00	0.00
28	Total Gas (lb/hr)		2,441,736	28.86	100.00	100.00	233,064	28.86	100.00	100.00	213,660	1,995,012	28.86	100.00
29														
30	Volumetric Flow Rates (STP 14.7 psia, 59F)													
31	(acfm)		534,264				9,051					77,475		
32	(scfm)		534,264				50,996				47,085	436,519		
33														
34	hgAdiabHeat(BTU/lb)													
35	Cp (BTU/lb F)		0.240				0.254					0.254		
36	HHV (BTU/lb)		0.0				0.0					0.0		
37	LHV (BTU/lb)		0.0				0.0					0.0		
38	Sensible Heat													
39	above 59 F Btu/lb		0				161					161		
40	Latent Heat													
41	of Water Btu/lb		7				7					7		
42														
43	Chemical Heat		0.00				0.00					0.00		
44	(LHV) MBtu/hr													
45	Sensible Heat		0.00				37.53					321.21		
46	above 59 F MBtu/hr													
47	Latent Heat		16.15				1.54					13.19		
48	of Water MBtu/hr													
49	TotalHeat(MBt u/hr)		16.15				39.07					334.41		
50												Parasitic Load		10.43 M
51														
52	C	12.011		315				30			28		258	258
53	H	1.008		1,725				165			151		1,409	1,409
54	O	16.000		575,700				54,951			50,376		470,374	470,374
55	N	14.007		1,831,924				174,857			160,299		1,496,767	1,496,767
56	S	32.060		0				0			0		0	0
57	CL2	35.500		2,409,664	sub-totals			230,003	sub-totals		210,854	sub-totals	1,968,808	1,968,808
58	H2O	18.016												balance check
59	ZnFe2O4													
60	ZnS													
61	FeS													
62	Fe2O3													
63	ZnO													
64	ASH													
65	Total Solids													
66	Total Flow (pph)		2,441,736				233,064				213,660	1,995,012		
67														
68	Total Flow (pps)		678.26 *				64.74			*	59.35	554.17		
69	Pressure (psia)		14.7 *				184 *					184		
70	Temperature (F)		59 *				693 *					693		

AS	AT	AU	AV	AW	AX	AY	AZ	BA	BB	BC	BD	BE	BF	BG
llinois #6							J-1538			DE-AC21-89MC26291				1
tput			Revision 7										10/16/90	2
		15			16						17			3
		Fuel		%H2S	Inlet Gas		Thrml NO (ppmvd)		25	Exhaust Gas				4
		HGCU		Removed	GT Combustor		*Rich/Lean Red. F		85%	Gas Turbine				5
		GT Combustor		99.0%	GT Expander									6
mol %	lb/hr	mol/hr	wt %	mol %	lb/hr	lb/mol	mols	wt %	mol%	lb/hr	mols/hr	wt %	mol%	7
														8
0.00	90,252	3,222	26.38	22.84	0	0.00	0.00	0.00	0.00	0	0.00	0.00	0.00	9
0.00	4,010	1,989	1.17	14.10	0	0.00	0.00	0.00	0.00	0	0.00	0.00	0.00	10
0.03	40,388	918	11.80	6.51	207,924	2.58	0.0020	8.90	5.86	208,025	4726.76	8.16	5.37	11
1.02	19,318	1,072	5.65	7.60	89,232	1.11	0.00	3.82	6.14	90,590	5028.61	3.55	5.71	12
0.00	7,374	460	2.16	3.26	0	0.00	0.00	0.00	0.00	0	0.00	0.00	0.00	13
0.00	1,462	49	0.43	0.34	0	0.00	0.00	0.00	0.00	0	0.00	0.00	0.00	14
0.00	25	1	0.01	0.01	0	0.00	0.00	0.00	0.00	0	0.00	0.00	0.00	15
0.00	7	0	0.00	0.00	0	0.00	0.00	0.00	0.00	0	0.00	0.00	0.00	16
77.28	174,970	6,246	51.14	44.28	1,672,553	20.73	0.0255	71.56	74.00	1,832,853	65428.65	71.85	74.27	17
0.95	3,061	77	0.89	0.54	29,265	0.36	0.00	1.25	0.91	32,071	802.83	1.26	0.91	18
0.00	0	0	0.00	0.00	0	0.00	0.00	0.00	0.00	0	0.00	0.00	0.00	19
0.00	119	4	0.03	0.03	0	0.00	0.00	0.00	0.00	0	0.00	0.00	0.00	20
0.00	1,173	69	0.34	0.49	0	0.00	0.00	0.00	0.00	0	0.00	0.00	0.00	21
0.00	0	0	0.00	0.00	0	0.00	0.00	0.00	0.00	0	0.00	0.00	0.00	22
0.00	0	0	0.00	0.00	56	0.0007	0.0000	0.0024	0.0011	56	0.87	0.00	0.00	23
0.00	0	0	0.00	0.00	454	0.0056	0.0000	0.0194	0.0188	454	15.13	0.02	0.02	24
20.72	0	0	0.00	0.00	337,691	4.19	0.0045	14.45	13.08	386,786	12087.43	15.16	13.72	25
0.00	0	0	0.00	0.00	0	0.00	0.00	0.00	0.00	0	0.00	0.00	0.00	26
0.00	0	0	0.00	0.00	0	0.00	0.00	0.00	0.00	0	0.00	0.00	0.00	27
100.00	342,160	14,106	100.00	100.00	2,337,172	28.97	0.0345	100.00	100.00	2,550,832	88090.28	100.00	100.00	28
					2,337,175 bal ck					2,550,835	bal ck			29
														30
	15,973				195,189					1,491,997				31
	89,063				509,424					556,174				32
														33
														34
	0.334				0.278					0.267				35
	2,548.9				0.0					0.0				36
	2,330.0				0.0					0				37
														38
	375				533					244				39
														40
	219				40					37				41
														42
	797.24				0.00					0.00				43
														44
	128.14				1246.68					623.55				45
														46
	74.88				92.80					94.21				47
														48
	1000.26				1339.48	1334.67 bal chk				717.76				49
MWg		Combustion Turbine Output			81.153 MWg					1.04 Turbine Compressor Surge Margin				50
														51
0.00%		56,449			56,706	56,706	0.00%			56,734	56,734	0.00%		52
0.00%		8,505			9,915	9,915	0.00%			10,066	10,066	0.00%		53
0.00%		98,119			568,493	568,495	0.00%			618,871	618,871	0.00%		54
0.00%		175,998			1,672,765	1,672,765	0.00%			1,833,065	1,833,065	0.00%		55
0.00%		28			28	28	0.10%			28	28	0.00%		56
0.00%		339,099	sub-total		2,307,907	2,307,910	0.00%	sub-total		2,518,763	2,518,763	0.00%	sub-total	57
ck							balance check					balance check		58
														59
														60
														61
														62
														63
														64
														65
	342,160				2,337,172					2,550,832				66
														67
	95.04				649.21					708.56				68
	259				180 *					15.13				69
	1180				1,975 *					973 *				70

	BH	BI	BJ	BK	BL	BM	BN	BO	BP	BQ	BR	BS
1	**Standardized IGCC Gasifier Cogen Application**						**Reference Coal -**				**Illinois #6**	
2	**Mass & Energy Balance**			**ABB GT 11N**			**Predicted Gasifier Output**					
3	Stream No.		18				19	Thrml NO (ppmvd)		25	20	21
4	Identification		Fuel for Supplementary Firing				Flue Gas		SCR Red F	80 %	Superheated Steam	Low Pressure St
5	From		Gasifier				HRSG		R/L Red F	85 %	HRSG	HRSG
6	To		HRSG				Stack		NOx Reburn F	0 %	Steam Turbine	Steam Turbin
7	Gas	Mol Wt	lb/hr	lb/mol	wt %	mol %	lb/hr	mols/hr	wt %	mol %	lb/hr	lb/hr
8												
9	CO	28.010	0	6.39	26.26	22.82	0	0.00	0.00	0.00		
10	H2	2.016	0	0.29	1.18	14.26	0	0.00	0.00	0.00		
11	CO2	44.010	0	2.86	11.75	6.50	208,025	4726.76	8.16	5.37		
12	H2O	18.015	0	1.24	5.11	6.90	90,590	5028.61	3.55	5.71		
13	CH4	16.042	0	0.52	2.15	3.26	0	0.00	0.00	0.00		
14	C2H6	30.068	0	0.10	0.43	0.34	0	0.00	0.00	0.00		
15	H2S	34.076	0	0.18	0.74	0.53	0	0.00	0.00	0.00		
16	COS	60.070	0	0.05	0.22	0.09	0	0.00	0.00	0.00		
17	N2	28.013	0	12.39	50.91	44.24	1,832,853	65428.65	71.86	74.28		
18	Ar	39.948	0	0.22	0.89	0.54	32,071	802.83	1.26	0.91		
19	HCl	36.461	0	0.00	0.00	0.00	0	0.00	0.00	0.00		
20	HCN	27.026	0	0.01	0.03	0.03	0	0.00	0.00	0.00		
21	NH3	17.030	0	0.08	0.34	0.49	0	0.00	0.00	0.00		
22	CS2	76.131	0	0.00	0.00	0.00	0	0.00	0.00	0.00	Stack Emissions (lb/MBtu)	
23	SO2	64.059	0	0.00	0.00	0.00	56	0.87	0.00	0.00	0.053	
24	NO	30.006	0	0.00	0.00	0.00	91	3.03	0.00	0.00	0.09	
25	O2	31.999	0	0.00	0.00	0.00	386,786	12087.43	15.17	13.72		
26	NaCl	58.497	0	0.00	0.00	0.00	0	0.00	0.00	0.00		
27	KCl	74.596	0	0.00	0.00	0.00	0	0.00	0.00	0.00		
28	Total Gas (lb/hr)		0	24.34	100.00	100.00	2,550,469	88078.18	100.00	100.00		
29							2,550,471	bal chk				
30	Volumetric Flow Rates (STP 14.7 psia, 59F)											
31	(acfm)		0				761,822					
32	(scfm)		0				556,098					
33												
34	Heat (BTU/lb)										1459.5	
35	Cp (BTU/lb F)		0.334				0.247					
36	HHV (BTU/lb)		2548.9				0.0					
37	LHV (BTU/lb)		2330.0				0					
38	Sensible Heat above											
39	59 F Btu/lb steam		0				47					
40	Latent Heat of											
41	Water Btu/lb steam		0				37					
42												
43	Chemical Heat		0.00				0.00					
44	(LHV) MBtu/hr											
45	Sensible Heat		0.00				121.06					
46	above 59 F MBtu/hr											
47	Latent Heat		0.00				94.21					
48	of Water MBtu/hr											
49	TotalHeat(MBtu/hr)		0.00				215.28				407.28	
50												HRSG Turbine C
51												
52	C	12.011		0			56,734	56,734	0.00%			
53	H	1.008		0			10,066	10,066	0.00%			
54	O	16.000		0			618,677	618,677	0.00%			
55	N	14.007		0			1,832,895	1,832,895	0.00%			
56	S	32.060		0			28	28	0.00%			
57	CL2	35.500		0	sub-total		2,518,400	2,518,400	0.00%	sub-total		
58	H2O	18.016										
59	ZnFe2O4											
60	ZnS											
61	FeS											
62	Fe2O3											
63	ZnO											
64	ASH											
65	Total Solids											
66	Total Flow (pph)		0				2,550,832				279,058	
67												
68	Total Flow (pps)		0 *				708.56				77.52	
69	Pressure (psia)		259				14.7				1265	
70	Temperature (F)		1180				251 *				935	

BS	BT	BU	BV	BW
	J-1538	DE-AC21-89MC26291		1
	Revision 7		10/16/90	2
21	22	23	24	3
Low Pressure Steam	Make Up Water	Sat. Steam	Process Stm	4
HRSG	WaterTreatment	Gasifier	Stm Turbine	5
Steam Turbine	HRSG	Steam Turbine	Process Facility	6
lb/hr	lb/hr	lb/hr	lb/hr	7
				8
				9
				10
				11
				12
				13
				14
				15
				16
				17
				18
				19
				20
				21
				22
				23
				24
				25
				26
				27
				28
				29
				30
				31
				32
				33
1242	48	1204	1214.5	34
				35
				36
				37
				38
				39
				40
				41
				42
				43
				44
				45
				46
				47
				48
76.89	1.60	60.54	23.32	49
HRSG Turbine Output	47.8	MWg		50
				51
				52
				53
				54
				55
				56
				57
				58
				59
				60
				61
				62
				63
				64
				65
61,906	33,355	59,584	19,199	66
				67
17.20	9.27	16.55	5.33	68
115	15	350	250	69
432	80	432	420	70

	BX	BY	BZ	CA	CB	CC	CD	CE	CF	CG	CH	CI
1	**Standardized IGCC Gasifier Cogen Application**								**Reference Coal -**			**Illinois #6**
2	**Mass & Energy Balance**				**ABB GT 11N**				**Predicted Gasifier Output**			
3	Stream No.		25		26					27		27a
4	Identification		Regen Recycle Loop		Conc SO2 Bleed					Elemental Sulfur		Elemental Sulfur
5	From		Recycle Blower		Regen Loop					Resox Process		DSRP
6	To		Regenerator		SRP					Marketable Byproduct		Marketable Byprodu
7	Gas	Mol Wt	lb/hr	wt%	lb/hr	lbs/mol	mols/hr	wt%	mol%	lb/hr	wt%	lb/hr
8												
9	CO	28.010			0	0.00	0.00	0.00	0.00			
10	H2	2.016			0	0.00	0.00	0.00	0.00			
11	CO2	44.010	140	0.05	12	0.02	0.27	0.05	0.04			
12	H2O	18.015	1,751	0.62	146	0.20	8.10	0.62	1.11			
13	CH4	16.042			0	0.00	0.00	0.00	0.00			
14	C2H6	30.068			0	0.00	0.00	0.00	0.00			
15	H2S	34.076			0	0.00	0.00	0.00	0.00			
16	COS	60.070			0	0.00	0.00	0.00	0.00			
17	N2	28.013	211,878	74.87	17,657	24.10	630.30	74.87	86.02			
18	Ar	39.948	0	0.00	0	0.00	0.00	0.00	0.00			
19	HCl	36.461			0	0.00	0.00	0.00	0.00			
20	HCN	27.026			0	0.00	0.00	0.00	0.00			
21	NH3	17.030			0	0.00	0.00	0.00	0.00			
22	CS2	76.131			0	0.00	0.00	0.00	0.00			
23	SO2	64.059	66,149	23.37	5,512	7.52	86.05	23.37	11.74			
24	NO	30.006			0	0.00	0.00	0.00	0.00			
25	O2	31.999	3,073	1.09	256	0.35	8.00	1.09	1.09			
26	NaCl	58.497			0	0.00	0.00	0.00	0.00			
27	KCl	74.596			0	0.00	0.00	0.00	0.00			
28	Total Gas (lb/hr)		282,992	100.00	23,583	32.19	733	100.00	100.00			
29												
30	Volumetric Flow Rates		(STP 14.7 psia, 59 F)									
31	(acfm)		9,948		784							
32	(scfm)		55,514		4,626							
33												
34	Heat (BTU/lb)											
35	Cp (BTU/lb F)		0.240		0.240					0.000		0
36	HHV (BTU/lb)											
37	LHV (BTU/lb)											
38	Sensible Heat above											
39	59 F Btu/lb steam											
40	Latent Heat of											
41	Water Btu/lb steam											
42												
43	Chemical Heat									10.97		1
44	(LHV) MBtu/hr											
45	Sensible Heat		91.08		7.02					0.00		
46	above 59 F MBtu/hr											
47	Latent Heat		1.82		0.15					0.00		
48	of Water MBtu/hr											
49	TotalHeat(MBtu/hr)		92.90		7.18					10.97		1
50												
51												
52	C	12.011										
53	H	1.008										
54	O	16.000										
55	N	14.007										
56	S	32.060								2,756		2
57	CL2	35.500										
58	H2O	18.016										
59	ZnFe2O4											
60	ZnS											
61	FeS											
62	Fe2O3											
63	ZnO											
64	ASH				0.00			0				
65	Total Solids											
66	Total Flow (pph)		282,992		23,583					2,756		
67												
68	Total Flow (pps)		78.61		6.55					0.77		
69	Pressure (psia)		294		294					15		
70	Temperature (F)		1400		1300					284		

CI	CJ	CK	CL	CM
ois #6	J-1538	DE-AC21-89MC26291		1
	Revision 7		10/16/90	2
27a	27b	28		3
emental Sulfur	Sulfur Dioxide	Ash		4
DSRP	SO2 Recovery Unit	SO2 Reductor		5
etable Byproduct	Marketable Byproduct	Disposal		6
lb/hr	lb/hr	lb/hr	wt%	7
				8
				9
				10
				11
				12
				13
				14
				15
				16
				17
				18
				19
				20
				21
				22
				23
				24
				25
				26
				27
				28
				29
				30
				31
				32
				33
				34
0.000	0.000			35
				36
				37
				38
		154	0	39
				40
				41
				42
10.97	10.97	3.96	0	43
				44
0.00	0.00	0.00	0	45
				46
0.00	0.00	0.00	0	47
				48
10.97	10.97	3.96	0.4	49
				50
				51
		273	3	52
				53
				54
				55
2,756	2,756			56
				57
				58
				59
				60
				61
				62
				63
		9,671	97	64
		9,944	100	65
2,756	5,512	9,944	100	66
				67
0.77	1.53	2.76		68
15	100	15		69
190	59	284		70

200 MW Cogen Cycle
Mitsubishi-Westinghouse 501 F

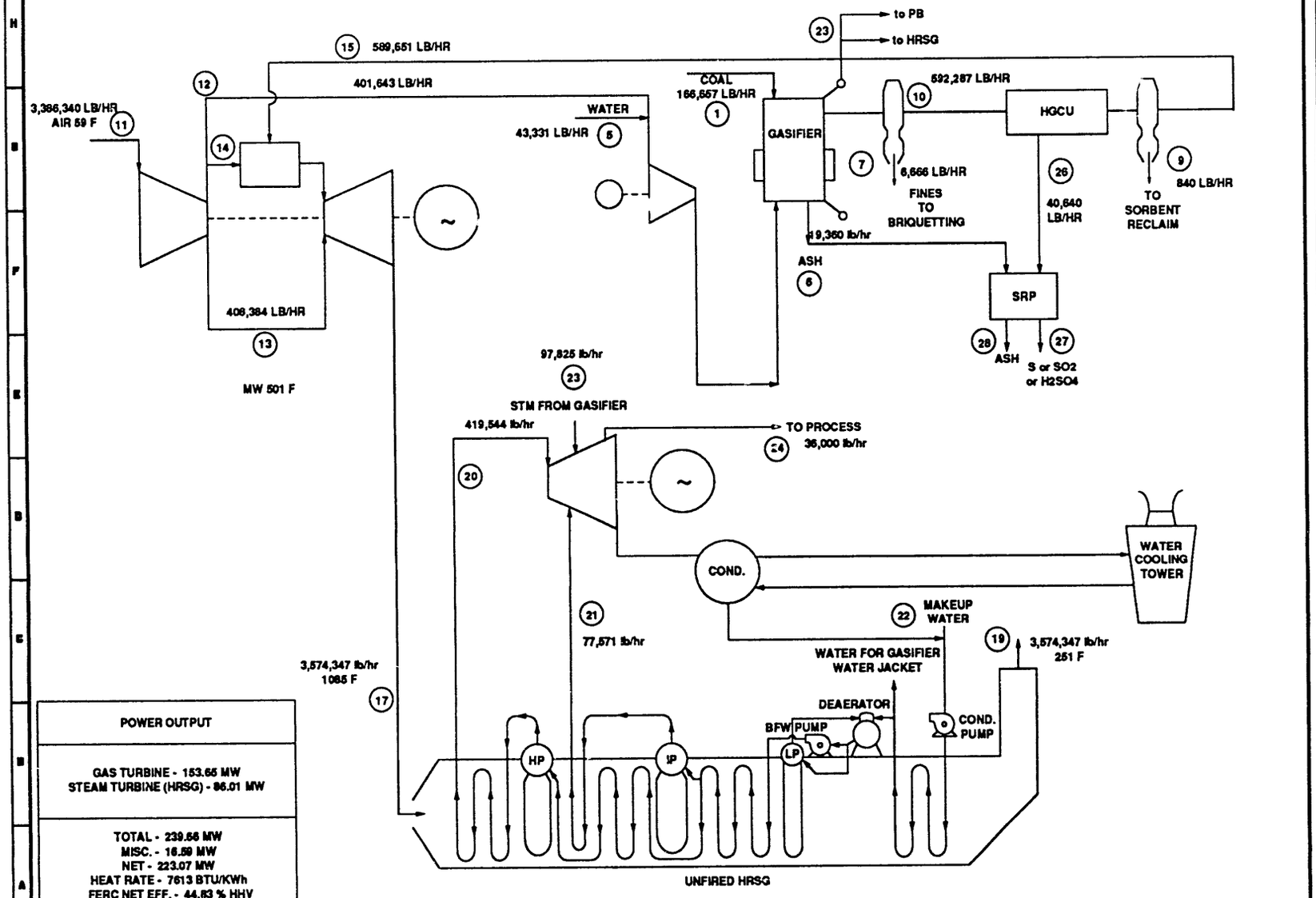
to PB
to HRSG
23
15 589,651 LB/HR
401,643 LB/HR
12
3,386,340 LB/HR
AIR 59 F
11
14
408,384 LB/HR
13
MW 501 F
WATER
43,331 LB/HR
5
COAL
166,657 LB/HR
1
GASIFIER
7
6,666 LB/HR
FINES
TO
BRIQUETTING
592,287 LB/HR
10
HGCU
26
40,640
LB/HR
9
840 LB/HR
TO
SORBENT
RECLAIM
19,360 lb/hr
ASH
6
SRP
28
ASH
27
S or SO2
or H2SO4
97,825 lb/hr
23
STM FROM GASIFIER
419,544 lb/hr
TO PROCESS
24
36,000 lb/hr
20
COND.
WATER
COOLING
TOWER
21
77,571 lb/hr
22
MAKEUP
WATER
WATER FOR GASIFIER
WATER JACKET
19
3,574,347 lb/hr
251 F
3,574,347 lb/hr
1085 F
17
DEAERATOR
BFW PUMP
COND.
PUMP
HP
IP
LP
UNFIRED HRSG
POWER OUTPUT
GAS TURBINE - 153.66 MW
STEAM TURBINE (HRSG) - 86.01 MW
TOTAL - 239.66 MW
MISC. - 16.59 MW
NET - 223.07 MW
HEAT RATE - 7613 BTU/KWh
FERC NET EFF. - 44.83 % HHV
CRSS
CRS SIRRINE
Power Division
Greenville, S.C.
IGCC
PROJECT
J-1536
200MW
COGENERATION
SCHEMATIC

IGCC 63 - 200 MW COGEN CYCLE
MITSUBISHI-WESTINGHOUSE 501 F

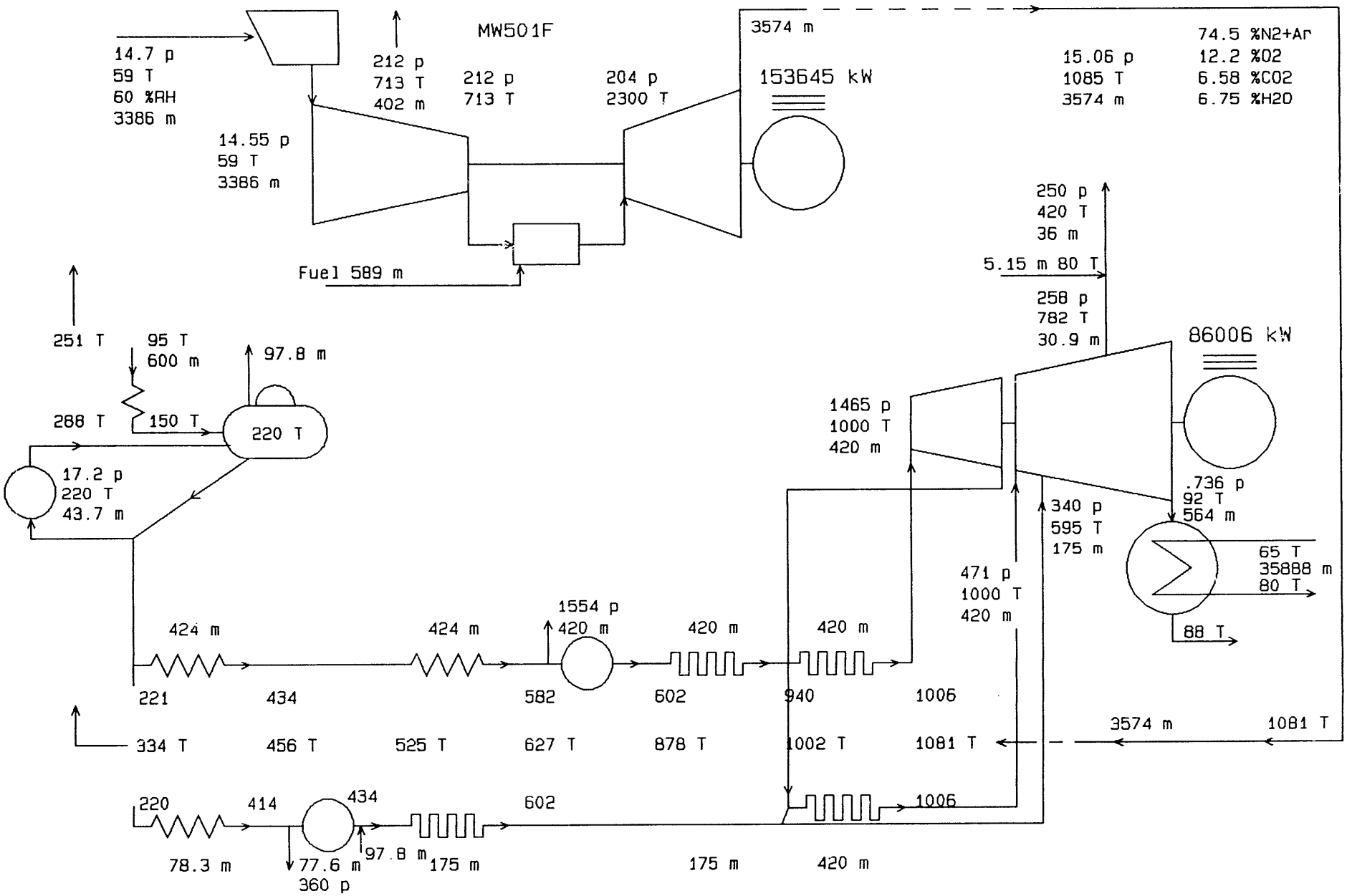

GTPRO 3.31 Michael Brown 10-15-1990 13:44:18
p psia, T F, m kpph

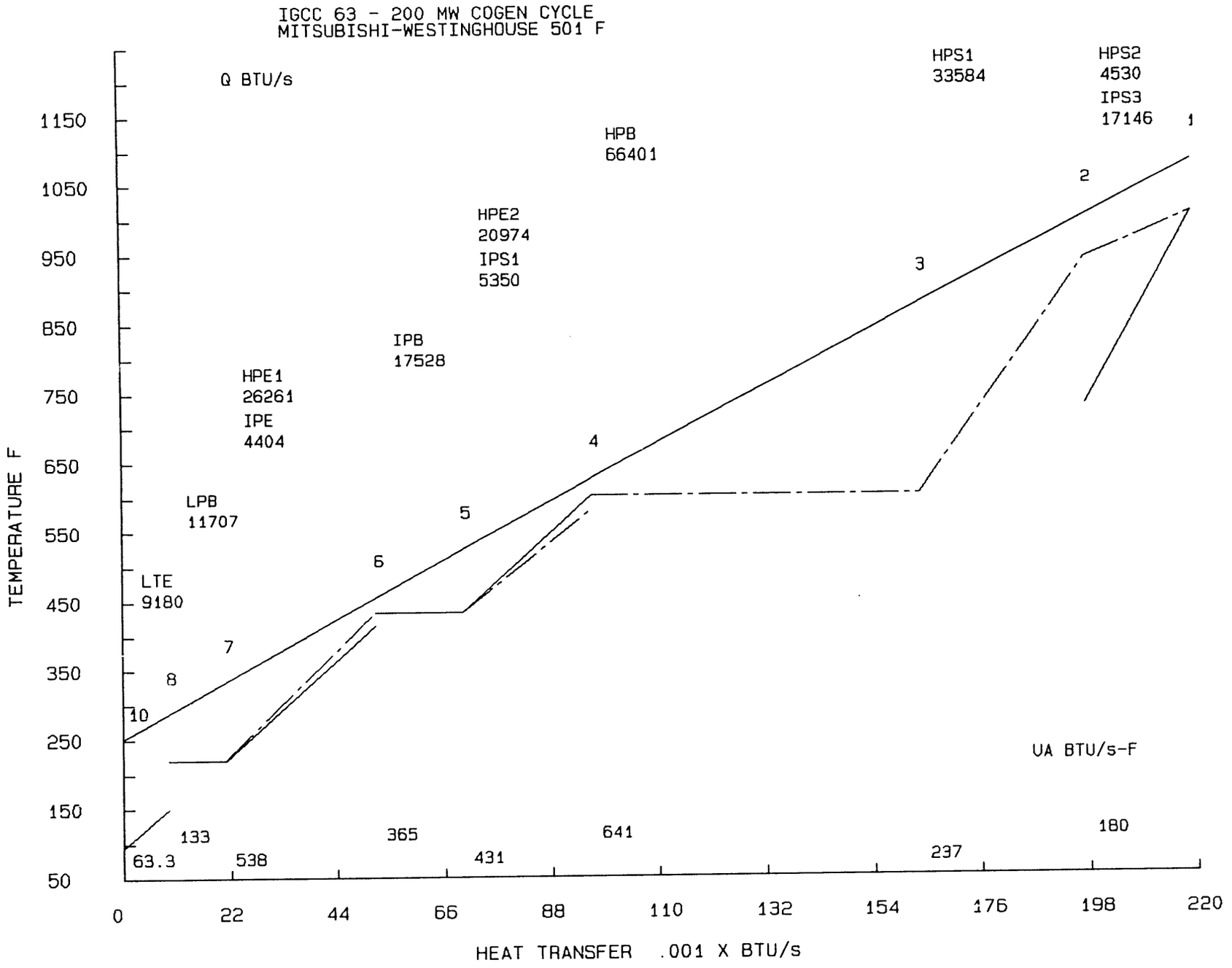

GTPRO 3.31 Michael Brown 10-15-1990 13: 44: 18

GTPRO 3.31 Michael Brown 10-15-1990 13:43:52
IGCC 63 - 200 MW COGEN CYCLE
MITSUBISHI-WESTINGHOUSE 501 F

ESTIMATED G.T. SITE PERFORMANCE

Fuel=Fuel G.T. @ 100 % rating, XIGV= 0
Site ambient conditions: 14.7 psia, 59 F, 60 % RH
Inlet loss= 4 inch H2O, exhaust loss= 10 inch H2O
Evap. inlet cooler to 0 % RH.

G.T. DEVIATION FROM NOMINAL, CLEAN ENGINE

Compressor inlet airflow % reduction = 0
Compressor efficiency reduction % = 0
Turbine efficiency reduction % = 0
Maximum firing temperature excess over base load = 0 F
Combustor % pressure loss (0 means nominal value) = 0
Combustor inefficiency + heat loss % (0 means nominal value) = 0
Cooling air increase % (0 means nominal value) = 0
Process air bleed location (0 means none) = 1
Process air bleed % of inlet = 11.86

#	Model	PR	TIT F	TET F	Mair kpph	kWe	H.R.LHV BTU/kWh	Mex kpph	N2+Ar %	O2 %	CO2 %	H2O %
4	MW501F	14.6	2300	1085	3386	153645	10376	3574	74.50	12.17	6.58	6.75

Fuel flow = 589 kpph
G.T. auxillary power = 762 kWe.

ESTIMATED G.T. CYCLE

STREAM	TEMP. F	PRESS. psia	MASSFLOW kpph	M.W.	MOLE COMPOSITION % N2+Ar	O2	CO2	H2O
Ambient air in	59	14.70	3386.37	28.75	78.22	20.74	0.03	1.01
Compr. inlet	59	14.55	3386.37	28.75	78.22	20.74	0.03	1.01
Turbine coolant	misc.		408.37					
Process air bld	713	212.28	401.62	28.75	78.22	20.74	0.03	1.01
Compr. disch.	713	212.28	2576.38	28.75	78.22	20.74	0.03	1.01
Turbine inlet	2300	203.79	3166.03	28.90	74.02	11.05	7.43	7.50
Turbine exhaust	1085	15.06	3574.40	28.88	74.50	12.17	6.58	6.75

Compressor= 159812 Turbine= 316579 Mech. loss= 940 kW
Turbine coolant= 12.1 % compr in
GT specific power @ gen term= 45.4 kW per kpph
GT efficiency @ gen term= 30.26 % HHV = 32.89 % LHV

GAS TURBINE/GENERATOR HEAT BALANCE

Energy in = 493736 BTU/s

Inlet air Sensible	Inlet air Latent	Water Inj.	Steam Inj.	Fuel HHV
6194	6263	0	0	481280

Energy out = 496446 BTU/s

Incompl comb & carcass rad	GT Mech. Losses	Gearbox Loss	Generator Loss	Exhaust Sensible	Exhaust Latent	Electric Output	Proc Air
9899	597	0	2080	274646	43964	145636	19624

Zero enthalpy: dry gases & liquid water @ 32 F (273.15 K)
Heat Balance Error = In - Out =-2710 BTU/s =-.549 %

GTPRO 3.31 Michael Brown 10-15-1990 13:43:58 Steam cycle p.1
IGCC 63 - 200 MW COGEN CYCLE
MITSUBISHI-WESTINGHOUSE 501 F
Type: 10 Subtype: 3 Induction

	P psia	T F	h BTU/lb	m kpph	UA BTU/s-F	Q BTU/s	A sq.ft
Cnd rtrn	0.74	87.57	55.58	564.092			
Stm rtrn	17.72	250.00	218.49	27.000			
Makeup	17.72	80.00	48.02	13.971	(Includes 5.15 kpph for desup)		
FW supl	17.72	94.81	62.80	599.916			
LTE				599.916	63	9180	31169
from LTE	17.20	150.00	117.88	599.916			
LPB				43.655	133	11707	60301
water bleed				97.830			
Htd. FW	17.20	220.00	188.13	502.086			
HPFW	1648.87	221.31	194.33	423.739			
HPE1				423.739	477	26261	224762
6	1600.84	434.18	417.45	0.000			
HPE2				423.739	325	20974	147371
7	1577.53	581.98	595.64	0.000			
HPE3				423.739	0	0	0
8	1554.22	581.98	595.64	0.000			
Blwdn	1554.22	601.98	619.75	4.195			
HPB				419.544	641	66402	266495
9	1554.22	601.98	1165.18	0.000			
HPS1				419.544	237	33584	124491
10	1508.95	940.05	1453.36	0.000			
HPS2				419.544	67	4530	34948
11	1508.95	1006.00	1492.23	0.000			
Into HPT	1465.00	1000.00	1490.10	419.544			
R/H extr	500.00	729.39	1375.23	419.544			
stm addn	500.00	650.00	1331.99	0.000			
cold R/H	500.00	729.39	1375.23	419.544			
into HPT	471.30	1000.00	1519.55	419.544			
HPT exit	339.81	924.63	1483.59	419.544			
IPFW	371.32	220.29	189.48	78.347			
IPE				78.347	62	4404	29072
1	360.50	414.18	391.86	0.000			
Blwdn	360.50	434.18	412.73	0.776			
IPB				77.571	365	17528	158018
Stm addn	360.50	434.18	1205.09	97.830			
2	360.50	434.18	1205.09	0.000			
IPS1				175.401	106	5350	58523
3	350.00	601.98	1314.90	0.000			
IPS2				175.401	0	0	0
4	350.00	601.98	1314.90	0.000			
cold R/H	500.00	729.39	1375.23	419.544			
IPS3				419.544	113	17146	58935
5	485.44	1006.00	1522.36	0.000			
IPT LPT	339.81	827.30	1432.97	594.945			
LPT bld.	257.50	781.55	1412.52	30.853			
Desuperhtr				5.147			
LPT proc	250.00	420.00	1214.85	36.000			
LPT exit	0.74	91.57	1009.90	564.092			

STEAM TURBINE

	No. of steps	Exit Quality	Efficiency(%)	Work (kW)
To HPT exit	1	1.349	72.75	18543
To LPT bleed	1	1.255		
To LPT exit	15	0.912	86.63	70123

Gross power = 88666 kW. Mech/Elect losses = 2660 kW.
Generator output = 86006 kWe. ST auxiliaries = 602 kWe
Boiler feedpumps = 896 kWe

CONDENSER

	P psia	T F	h BTU/lb	m kpph
LPT exit	0.7365	91.57	1009.90	564.09
Saturation	0.7365	91.57		
Condensate well	0.7365	87.57	55.58	564.09
Cooling water in		65.00		35888.31
Cooling water out		80.00		35888.31

Number of passes= 1 UA= 8300 BTU/s-F Surface area = 40595 sq.ft
Tubes: OD = 1 in Length= 38.6 ft number= 4020
Cooling water: Velocity= 9 ft/s DP = 9.02 psia Pumps = 405 kWe.

STEAM CYCLE HEAT BALANCE

Energy in = 353942 BTU/s

GT Exhaust Sensible	GT Exhaust Latent	Duct Burner Fuel HHV	Makeup+Proc Return	Pump Work	External Steam
274646	43964	0	1825	759	32748

Energy out = 353797 BTU/s

Heat Radiated	Blow down	Mech/Elec Losses	Stack Sens.	Stack Latent	Condnsr C.W.	Process Steam	GT Injec.	Proc. Water	Electric Output
3890	811	2521	54293	43964	149534	12148	0	5113	81523

Zero enthalpy: dry gases & liquid water @ 32 F (273.15 K)
Heat Balance Error = In - Out = 145 BTU/s = .041 %

HRSG GAS-SIDE PROFILE

	Tg F	Tw F HP/IP	DT F HP/IP	Qg/UA F	DELTA P inch H2O	UA BTU/s-F	Qg BTU/s	Vg ft/s	Tube Rows	Lngth ft
1	1080.8	1006.0	74.8							
1	1080.8	1006.0	74.8							
				121.4	1.0	180.4	21893.5	54.5	4.5	1.9
	1001.9	940.1	61.9							
	1001.9	729.4	272.6							
2	1001.9	940.1	61.9							
				143.3	1.3	236.8	33920.2	50.8	6.0	2.5
	878.1	602.0	276.2							
3	878.1	602.0	276.2							
				104.6	2.3	641.4	67066.0	44.0	12.8	5.4
	627.0	602.0	25.0							
4	627.0	582.0	45.0							
4	627.0	602.0	25.0							
				61.7	1.5	430.8	26587.6	37.6	9.9	4.1
	524.9	434.2	90.7							
	524.9	434.2	90.7							
5	524.9	434.2	90.7							
				48.5	1.0	364.9	17702.9	34.5	7.6	3.2
	456.2	434.2	22.0							
6	456.2	434.2	22.0							
6	456.2	414.2	42.0							
				57.6	1.4	538.2	30972.4	31.0	12.2	5.1
	334.5	221.3	113.2							
	334.5	220.3	114.2							
7	334.5	220.0	114.5							
				88.9	0.3	132.9	11823.7	28.0	2.9	1.2
	287.5	220.0	67.5							
8	287.5	150.0	137.5							
				146.5	0.1	63.3	9271.5	26.5	1.5	0.6
	250.6	94.8	155.8							

Duct burner fuel= 0 kpph
Gas mole composition: 74.5 %N2+Ar 12.2 %O2 6.58 %CO2 6.75 %H2O .002 %SO2
Flue gas dew point = 101 F M.W.= 28.9

HRSG TOTALS	Economisers	Evaporators	Superheaters	TOTAL
Q BTU/s	60020	95636	60611	217067
UA BTU/s-F	926	1139	523	2589
A sq.ft	432373	484814	276897	1194085

Prime surface= 69460 fin surface= 1124624 sq.ft. Averaged fin eff.= .732
HRSG frontal area = 1372 sq.ft. Gas mass flux= 5.17 kpph/sq.ft
HRSG length = 24 ft, 57.6 tube rows, 3292 ft of tubes per row.
2 in dia. tubes with serrated fins, staggered arrangement.
Fin thickness/dia.= .03 , height/dia.= .4 , spacing/dia.= .07
Tube transverse pitch/dia.= 2.5 , row longitudinal pitch/dia.= 2.5

MW 501 F

Water cooling

air to coal ratio	2.41	air pressure	212	Cp air	0.248
water coal ratio	0.143	air temperature	713	Cp water	1.000
air to water ratio	16.28	water temperature	80	Cp steam	0.455

	lb	wt %	mols	mol %	partial pressure
air	16.28	94.21%	0.57	91.07%	193.07
water	1.00	5.79%	0.06	8.93%	18.93

sat temp 224.7

Temperature of combined stream entering boost compressor

399.90 F sat pressure 247 psia Rel. Hum. 7.66%

Temperature of stream exiting compressor (85% comp eff)

Tf = Ti + (Ti/n*((Pf/Pi)^((k-1)/k)-1))

where
Ti - inlet temperature - 399.90 F - 859.90 R
n - efficiency - 85.00%
k - ratio of specific heat @ constant pressure to specific
to specific heat @ constant volume 1.384
Pf - final pressure 350 psia
Pi - initial pressure 212 psia

Tf = 550.88 F

	A	B	C	D	E	F	G	H	I	J	K	L	M	N	O
1	Standardized IGCC Gasifier Cogen Application													Reference Coal -	
2	Mass & Energy Balance					MW 501 F			Plant		Full Load			Predicted Gasifier Out	
3	Stream No.			1		2		3			4			5	
4	Identification			AR Coal		Coal Fines		Sized Coal		CompAir@	2.41 A/C			Water @	0.26
5	From			Illinois #6		Sizer @	30%	Combined Streams		Aux Compr &/or Booster Compr				Cooling Water	H2O/
6	To			Sizer		Briquetting		Gasifier		Gasifier				Gasifier	Coal
7	Gas	Mol Wt		lb/hr	wt %	lb/hr	wt %	lb/hr	wt %	lb/hr	lb/mol	wt %	mol %	lb/hr	
8															
9	CO	28.010								0	0.00	0.00	0.00		
10	H2	2.016								0	0.00	0.00	0.00		
11	CO2	44.010								190	0.01	0.05	0.03		
12	H2O	18.015								2,554	0.18	0.64	1.02	43,331	
13	CH4	16.042								0	0.00	0.00	0.00		
14	C2H6	30.068								0	0.00	0.00	0.00		
15	H2S	34.076								0	0.00	0.00	0.00		
16	COS	60.070								0	0.00	0.00	0.00		
17	N2	28.013								301,335	21.65	75.03	77.28		
18	Ar	39.948								5,276	0.38	1.31	0.95		
19	HCl	36.461								0	0.00	0.00	0.00		
20	HCN	27.026								0	0.00	0.00	0.00		
21	NH3	17.030								0	0.00	0.00	0.00		
22	CS2	76.131								0	0.00	0.00	0.00		
23	SO2	64.059								0	0.00	0.00	0.00		
24	NO	30.006								0	0.00	0.00	0.00		
25	O2	31.999								92,289	6.63	22.98	20.72		
26	NaCl	58.497								0	0.00	0.00	0.00		
27	KCl	74.596								0	0.00	0.00	0.00		
28	Total Gas (lb/hr)									401,643	28.86	100.00	100.00	43,331	
29															
30	Volumetric Flow Rates (STP 14.7 psia, 59F)														
31	(acfm)									7,190					
32	(scfm)									87,882					
33															
34	Heat (BTU/lb)													1308	
35	Cp (BTU/lb F)									0.249					
36	HHV (BTU/lb)			10,776		10,776		10,776		0					
37	LHV (BTU/lb)			10,239		10,239		10,260		0					
38	Sensible Heat above														
39	59 F Btu/lb steam			0		0		0		123					
40	Latent Heat of														
41	Water Btu/lb steam									7					
42															
43	Chemical Heat			1706.41		511.92		1778.42		0.00					
44	(LHV) MBtu/hr														
45	Sensible Heat			0.00		0.00		0.00		49.24					
46	above 59 F MBtu/hr														
47	Latent Heat			89.49		26.85		89.49		2.66					
48	of Water MBtu/hr														
49	TotalHeat(MBtu/hr)			1795.90		538.77		1867.91		51.89				56.68	
50				Number of Gasifiers for 85% Plant Availability @90% Gasifier Availability,										350	psia &
51															
52	C	12.011		100,178	60.11%	30,053	60.11%	105,351	60.78%		52				
53	H	1.008		6,950	4.17%	2,085	4.17%	6,950	4.01%		284			4,815	
54	O	16.000		12,616	7.57%	3,785	7.57%	12,616	7.28%		94,697			38,516	
55	N	14.007		1,967	1.18%	590	1.18%	1,967	1.13%		301,335			43,331	Total
56	S	32.060		4,800	2.88%	1,440	2.88%	4,800	2.77%		396,368	Total			
57	CL2	35.500		0	0.00%	0	0.00%	0	0.00%		-				
58	H2O	18.016		23,499	14.10%	7,050	14.10%	23,499	13.56%						
59	ZnFe2O4														
60	ZnS														
61	FeS														
62	Fe2O3														
63	ZnO														
64	ASH			16,666	10.00%	5,000	10.00%	18,159	10.48%						
65	Total Solids			166,657	100.01%	49,997	100.01%	173,340	100.00%						
66	Total Flow (pph)			166,657 *		49,997		173,340		401,643				43,331	
67															
68	Total Flow (pps)			46.29		13.89		48.15		111.57				12.04	
69	Pressure (psia)			14.7		14.7		14.7		350 *				350 *	
70	Temperature (F)			59		59		59		551 *				551 *	

Illinois #6 — J-1538 — DE-AC21-89MC26291

Output — 10/16/90 — Revision 7

O	P	Q	R	S	T	U	V	W	X	Y	Z	AA	AB	AC	AD
0.26 H2O/ Coal	6 Ash Gasifier Ash Silo	Uncomb Carbon 2.69%	7 Fines (Char) Gasifier @ Briquetting	4.00%	8 Tar Gasifier @ HGCU	6.00%	9 Dust(per RTI dis) Final Cyclone Reclaim		Miscellaneous Gasifier Heat Losses		10 Hot Gas with Tars Gasifier HGCU	55 scf/lb of coal N2 in coal to NH3 Conv		90.1%	
	lb/hr	wt %	lb/hr	wt %	lb/hr	wt %	lb/hr	wt %			lb/hr	lb/mol	wt %	mol %	
											155,532	6.39	26.26	22.82	9
											6,997	0.29	1.18	14.26	10
											69,602	2.86	11.75	6.50	11
											30,240	1.24	5.11	6.90	12
											12,707	0.52	2.15	3.26	13
											2,520	0.10	0.43	0.34	14
											4,372	0.18	0.74	0.53	15
											1,286	0.05	0.22	0.09	16
											301,529	12.39	50.91	44.24	17
											5,275	0.22	0.89	0.54	18
											0	0.00	0.00	0.00	19
											205	0.01	0.03	0.03	20
											2,022	0.08	0.34	0.49	21
											0	0.00	0.00	0.00	22
											0	0.00	0.00	0.00	23
											0	0.00	0.00	0.00	24
											0	0.00	0.00	0.00	25
											0	0.00	0.00	0.00	26
											0	0.00	0.00	0.00	27
											592,287	24.34	100.00	100.00	28
															29
											592,287				30
											23,939				31
											153,688				32
															33
8															34
	0.260		0.260		0.26		0.260				0.329				35
	0		10,936		17,329		0				2,588.8				36
	0		10,936		16,571		0				2,375.0				37
															38
	154		276		276		323				349				39
															40
	0		0		749		0				214				41
															42
	39.07		72.90		165.71		0.00				1406.66				43
															44
	2.97		1.84		2.76		0.27		99.4 Water/steam jacket		206.52				45
															46
	0.00		0.00		7.49		0.00		23.2 Traversing Stirrer		126.68	Gas HHV=	189	Btu/scf	47
												Estimated=	628	Btu/lb	48
68	42.05		74.74		175.95		0.27		122.6 Total		1739.86	Calculated=	639	Btu/lb	49
psia & 17 tph (typical) Coal each:				6.9		Unit Output (MWn)			223.1 MWn			BulkGas=	4.68%	H2O	50
												Calc Comb Temp (F)	2340		51
	2,695	13.92	5,173	77.60%	8,799	88.00%					97,535	97,534	0.00%		52
15			0	0.00%	800	8.00%					14,659	14,660	0.00%		53
16			0	0.00%	200	2.00%					166,717	166,718	0.00%		54
31 Total			0	0.00%	100	1.00%					303,301	303,300	0.00%		55
	0	0.00	0	0.00%	100	1.00%					4,800	4,801	-0.02%		56
			0	0.00%						Sub-Totals	587,012	587,012	0.00%		57
			0	0.00%							Sum of Streams	Sum of Gas Constituents	Mass Unbalance		58
							756	90							59
							17	2			balance check				60
							50	6			FERC Cycle Efficiency(g)= 47.98%				61
							0	0			FERC Cycle Efficiency(n)= 44.83%				62
							17	2							63
							0	0							64
	16,666	86.08	1,493	22.40%			840	100							65
	19,360	100	6,666	100.00%	9,999	100.00%					592,287				66
31	19,360		6,666		9,999		840								67
104	5.38		1.85		2.78		0.23				164.52				68
350 *	14.7		350 *		350 *		287				287				69
551 *	650		1120		1120		1300				1120				70

	AE	AF	AG	AH	AI	AJ	AK	AL	AM	AN	AO	AP	AQ	AR
1	**Standardized IGCC Gasifier Cogen Application**											**Reference Coal -**		**Il**
2	**Mass & Energy Balance**			**MW 501 F**			**Plant**					**Predicted Gasifier Out**		
3	**Stream No.**				**11**				**12**		**13**		**14**	
4	**Identification**				**Air**				**Bleed Air**		**Bleed Air**		**Compressor Discharge**	
5	**From**				**Atmosphere**				**Compressor**		**for**		**Compressor**	
6	**To**				**Gas Turbine Compressor**				**Booster Compressor Cooler**		**Coolant**		**Combustor**	
7	**Gas**	**Mol Wt**	**lb/hr**	**lb/mol**	**wt %**	**mol %**	**lb/hr**	**lb/mol**	**wt %**	**mol %**	**lb/hr**	**lb/hr**	**lb/mol**	**wt %**
8														
9	CO	28.010	0	0.00	0.00	0.00	0	0.00	0.00	0.00	0	0	0.00	0.00
10	H2	2.016	0	0.00	0.00	0.00	0	0.00	0.00	0.00	0	0	0.00	0.00
11	CO2	44.010	1,604	0.01	0.05	0.03	190	0.01	0.05	0.03	193	1,220	0.01	0.05
12	H2O	18.015	21,530	0.18	0.64	1.02	2,554	0.18	0.64	1.02	2,596	16,380	0.18	0.64
13	CH4	16.042	0	0.00	0.00	0.00	0	0.00	0.00	0.00	0	0	0.00	0.00
14	C2H6	30.068	0	0.00	0.00	0.00	0	0.00	0.00	0.00	0	0	0.00	0.00
15	H2S	34.076	0	0.00	0.00	0.00	0	0.00	0.00	0.00	0	0	0.00	0.00
16	COS	60.070	0	0.00	0.00	0.00	0	0.00	0.00	0.00	0	0	0.00	0.00
17	N2	28.013	2,540,618	21.65	75.03	77.28	301,335	21.65	75.03	77.28	306,392	1,932,891	21.65	75.03
18	Ar	39.948	44,479	0.38	1.31	0.95	5,276	0.38	1.31	0.95	5,364	33,839	0.38	1.31
19	HCl	36.461	0	0.00	0.00	0.00	0	0.00	0.00	0.00	0	0	0.00	0.00
20	HCN	27.026	0	0.00	0.00	0.00	0	0.00	0.00	0.00	0	0	0.00	0.00
21	NH3	17.030	0	0.00	0.00	0.00	0	0.00	0.00	0.00	0	0	0.00	0.00
22	CS2	76.131	0	0.00	0.00	0.00	0	0.00	0.00	0.00	0	0	0.00	0.00
23	SO2	64.059	0	0.00	0.00	0.00	0	0.00	0.00	0.00	0	0	0.00	0.00
24	NO	30.006	0	0.00	0.00	0.00	0	0.00	0.00	0.00	0	0	0.00	0.00
25	O2	31.999	778,109	6.63	22.98	20.72	92,289	6.63	22.98	20.72	93,838	591,982	6.63	22.98
26	NaCl	58.497	0	0.00	0.00	0.00	0	0.00	0.00	0.00	0	0	0.00	0.00
27	KCl	74.596	0	0.00	0.00	0.00	0	0.00	0.00	0.00	0	0	0.00	0.00
28	**Total Gas (lb/hr)**		3,386,340	28.86	100.00	100.00	401,643	28.86	100.00	100.00	408,384	2,576,313	28.86	100.00
29														
30	**Volumetric Flow Rates (STP 14.7 psia, 59F)**													
31	**(acfm)**		740,948				13,753					88,217		
32	**(scfm)**		740,948				87,882				89,997	563,710		
33														
34	**hgAdiabHeat(BTU/lb)**													
35	**Cp (BTU/lb F)**		0.240				0.255					0.255		
36	**HHV (BTU/lb)**		0.0				0.0					0.0		
37	**LHV (BTU/lb)**		0.0				0.0					0.0		
38	**Sensible Heat**													
39	**above 59 F Btu/lb**		0				167					167		
40	**Latent Heat**													
41	**of Water Btu/lb**		7				7					7		
42														
43	**Chemical Heat**		0.00				0.00					0.00		
44	**(LHV) MBtu/hr**													
45	**Sensible Heat**		0.00				66.89					429.03		
46	**above 59 F MBtu/hr**													
47	**Latent Heat**		22.39				2.66					17.04		
48	**of Water MBtu/hr**													
49	**TotalHeat(MBtu/hr)**		22.39				69.54					446.07		
50												**Parasitic Load**		**16.59 M**
51														
52	C	12.011		437				52			53		333	333
53	H	1.008		2,392				284			288		1,820	1,820
54	O	16.000		798,414				94,697			96,287		607,430	607,430
55	N	14.007		2,540,618				301,335			306,392		1,932,891	1,932,891
56	S	32.060		0				0			0		0	0
57	CL2	35.500		3,341,861	sub-totals			396,368	sub-totals		403,020	sub-totals	2,542,473	2,542,473
58	H2O	18.016												balance check
59	ZnFe2O4													
60	ZnS													
61	FeS													
62	Fe2O3													
63	ZnO													
64	ASH													
65	Total Solids													
66	Total Flow (pph)		3,386,340				401,643				408,384	2,576,313		
67														
68	Total Flow (pps)		940.65 *				111.57			*	113.44	715.64		
69	Pressure (psia)		14.7 *				212 *					212		
70	Temperature (F)		59 *				713 *					713		

al - Illinois #6 J-1538 DE-AC21-89MC26291

ifier Output Revision 7 10/16/90

AR	AS	AT	AU	AV	AW	AX	AY	AZ	BA	BB	BC	BD	BE	BF	BG
															1
															2
		15				16					17				3
or Discharge		Fuel			%H2S	Inlet Gas		Thrml NO (ppmvd)		25	Exhaust Gas				4
or		HGCU			Removed	GT Combustor		*Rich/Lean Red. F		85%	Gas Turbine				5
r		GT Combustor			99.0%	GT Expander									6
wt %	mol %	lb/hr	mol/hr	wt %	mol %	lb/hr	lb/mol	mols	wt %	mol%	lb/hr	mols/hr	wt %	mol%	7
															8
0.00	0.00	155,532	5,553	26.38	22.84	0	0.00	0.00	0.00	0.00	0	0.00	0.00	0.00	9
0.00	0.00	6,911	3,428	1.17	14.10	0	0.00	0.00	0.00	0.00	0	0.00	0.00	0.00	10
0.05	0.03	69,602	1,582	11.80	6.51	357,911	3.28	0.0026	11.30	7.45	358,104	8136.88	10.02	6.60	11
0.64	1.02	33,291	1,848	5.65	7.60	148,296	1.36	0.00	4.68	7.54	150,893	8375.96	4.22	6.79	12
0.00	0.00	12,707	792	2.16	3.26	0	0.00	0.00	0.00	0.00	0	0.00	0.00	0.00	13
0.00	0.00	2,520	84	0.43	0.34	0	0.00	0.00	0.00	0.00	0	0.00	0.00	0.00	14
0.00	0.00	44	1	0.01	0.01	0	0.00	0.00	0.00	0.00	0	0.00	0.00	0.00	15
0.00	0.00	13	0	0.00	0.00	0	0.00	0.00	0.00	0.00	0	0.00	0.00	0.00	16
75.03	77.28	301,529	10,764	51.14	44.28	2,235,823	20.48	0.0252	70.62	73.10	2,542,215	90751.26	71.12	73.58	17
1.31	0.95	5,275	132	0.89	0.54	39,114	0.36	0.00	1.24	0.90	44,478	1113.41	1.24	0.90	18
0.00	0.00	0	0	0.00	0.00	0	0.00	0.00	0.00	0.00	0	0.00	0.00	0.00	19
0.00	0.00	205	8	0.03	0.03	0	0.00	0.00	0.00	0.00	0	0.00	0.00	0.00	20
0.00	0.00	2,022	119	0.34	0.49	0	0.00	0.00	0.00	0.00	0	0.00	0.00	0.00	21
0.00	0.00	0	0	0.00	0.00	0	0.00	0.00	0.00	0.00	0	0.00	0.00	0.00	22
0.00	0.00	0	0	0.00	0.00	96	0.0009	0.0000	0.0030	0.0014	96	1.50	0.00	0.00	23
0.00	0.00	0	0	0.00	0.00	789	0.0072	0.0000	0.0249	0.0241	789	26.29	0.02	0.02	24
22.98	20.72	0	0	0.00	0.00	383,939	3.52	0.0038	12.13	10.99	477,777	14930.99	13.37	12.11	25
0.00	0.00	0	0	0.00	0.00	0	0.00	0.00	0.00	0.00	0	0.00	0.00	0.00	26
0.00	0.00	0	0	0.00	0.00	0	0.00	0.00	0.00	0.00	0	0.00	0.00	0.00	27
100.00	100.00	589,651	24,310	100.00	100.00	3,165,963	29.00	0.0345	100.00	100.00	3,574,347	123336.28	100.00	100.00	28
						3,165,968 bal ck					3,574,352	bal ck			29
															30
		24,815				264,161					2,252,233				31
		153,484				689,349					778,706				32
															33
															34
		0.334				0.284					0.267				35
		2,548.9				0.0					0.0				36
		2,330.0				0.0					0				37
															38
		375				636					274				39
															40
		219				49					44				41
															42
		1373.90				0.00					0.00				43
															44
		220.83				2014.96					980.81				45
															46
		129.04				154.23					156.93				47
															48
		1723.77				2169.19	2169.84 bal chk				1137.74				49
16.59 MWg			Combustion Turbine Output			153.645 MWg					1.06 Turbine Compressor Surge Margin				50
															51
333	0.00%		97,279			97,612	97,612	0.00%			97,665	97,665	0.00%		52
1,820	0.00%		14,657			16,477	16,477	0.00%			16,766	16,766	0.00%		53
607,430	0.00%		169,091			776,520	776,525	0.00%			872,812	872,812	0.00%		54
1,932,891	0.00%		303,300			2,236,191	2,236,191	0.00%			2,542,583	2,542,583	0.00%		55
0	0.00%		48			48	48	0.10%			48	48	0.00%		56
2,542,473	0.00%		584,376	sub-total		3,126,849	3,126,853	0.00%	sub-total		3,529,873	3,529,873	0.00%	sub-total	57
balance check								balance check					balance check		58
															59
															60
															61
															62
															63
															64
															65
		589,651				3,165,963					3,574,347				66
															67
		163.79				879.43					992.87				68
		287.3				204 *					15.13				69
		1180				2,300 *					1085 *				70

	BH	BI	BJ	BK	BL	BM	BN	BO	BP	BQ	BR	BS
1	**Standardized IGCC Gasifier Cogen Application**						**Reference Coal -**			**Illinois #6**		
2	**Mass & Energy Balance**			**MW 501 F**			**Predicted Gasifier Output**					
3	Stream No.		18				19	Thrml NO (ppmvd)		25	20	21
4	Identification		Fuel for Supplementary Firing				Flue Gas		SCR Red F	80 %	Superheated Steam	Low Pressure Ste
5	From		Gasifier				HRSG		R/L Red F	85 %	HRSG	HRSG
6	To		HRSG				Stack		NOx Reburn F	0 %	Steam Turbine	Steam Turbine
7	Gas	Mol Wt	lb/hr	lb/mol	wt %	mol %	lb/hr	mols/hr	wt %	mol %	lb/hr	lb/hr
8												
9	CO	28.010	0	6.39	26.26	22.82	0	0.00	0.00	0.00		
10	H2	2.016	0	0.29	1.18	14.26	0	0.00	0.00	0.00		
11	CO2	44.010	0	2.86	11.75	6.50	358,104	8136.88	10.02	6.60		
12	H2O	18.015	0	1.24	5.11	6.90	150,893	8375.96	4.22	6.79		
13	CH4	16.042	0	0.52	2.15	3.26	0	0.00	0.00	0.00		
14	C2H6	30.068	0	0.10	0.43	0.34	0	0.00	0.00	0.00		
15	H2S	34.076	0	0.18	0.74	0.53	0	0.00	0.00	0.00		
16	COS	60.070	0	0.05	0.22	0.09	0	0.00	0.00	0.00		
17	N2	28.013	0	12.39	50.91	44.24	2,542,215	90751.26	71.14	73.59		
18	Ar	39.948	0	0.22	0.89	0.54	44,478	1113.41	1.24	0.90		
19	HCl	36.461	0	0.00	0.00	0.00	0	0.00	0.00	0.00		
20	HCN	27.026	0	0.01	0.03	0.03	0	0.00	0.00	0.00		
21	NH3	17.030	0	0.08	0.34	0.49	0	0.00	0.00	0.00		
22	CS2	76.131	0	0.00	0.00	0.00	0	0.00	0.00	0.00	Stack Emissions (lb/MBtu)	
23	SO2	64.059	0	0.00	0.00	0.00	96	1.50	0.00	0.00	0.053	
24	NO	30.006	0	0.00	0.00	0.00	158	5.26	0.00	0.00	0.09	
25	O2	31.999	0	0.00	0.00	0.00	477,777	14930.99	13.37	12.11		
26	NaCl	58.497	0	0.00	0.00	0.00	0	0.00	0.00	0.00		
27	KCl	74.596	0	0.00	0.00	0.00	0	0.00	0.00	0.00		
28	Total Gas (lb/hr)		0	24.34	100.00	100.00	3,573,716	123315.25	100.00	100.00		
29							3,573,721	bal chk				
30	Volumetric Flow Rates (STP 14.7 psia, 59F)											
31	(acfm)		0				1,066,601					
32	(scfm)		0				778,574					
33												
34	Heat (BTU/lb)										1490.1	
35	Cp (BTU/lb F)		0.334				0.249					
36	HHV (BTU/lb)		2548.9				0.0					
37	LHV (BTU/lb)		2330.0				0					
38	Sensible Heat above											
39	59 F Btu/lb steam		0				48					
40	Latent Heat of											
41	Water Btu/lb steam		0				44					
42												
43	Chemical Heat		0.00				0.00					
44	(LHV) MBtu/hr											
45	Sensible Heat		0.00				170.57					
46	above 59 F MBtu/hr											
47	Latent Heat		0.00				156.93					
48	of Water MBtu/hr											
49	TotalHeat(MBtu/hr)		0.00				327.50				625.16	
50												HRSG Turbine Ou
51												
52	C	12.011		0			97,665	97,665	0.00%			
53	H	1.008		0			16,766	16,766	0.00%			
54	O	16.000		0			872,475	872,475	0.00%			
55	N	14.007		0			2,542,289	2,542,289	0.00%			
56	S	32.060		0			48	48	0.00%			
57	CL2	35.500		0	sub-total		3,529,242	3,529,242	0.00%	sub-total		
58	H2O	18.016										
59	ZnFe2O4											
60	ZnS											
61	FeS											
62	Fe2O3											
63	ZnO											
64	ASH											
65	Total Solids											
66	Total Flow (pph)		0				3,574,347				419,544	
67												
68	Total Flow (pps)		0 *				992.87				116.54	
69	Pressure (psia)		287.3				14.7				1465	
70	Temperature (F)		1180				251 *				1000	

BS	BT	BU	BV	BW
	J-1538	DE-AC21-89MC26291		1
	Revision 7		10/16/90	2
21	22	23	24	3
ow Pressure Steam	Make Up Water	Sat. Steam	Process Stm	4
HRSG	WaterTreatment	Gasifier	Stm Turbine	5
Steam Turbine	HRSG	HRSG	Process Facility	6
lb/hr	lb/hr	lb/hr	lb/hr	7
				8
				9
				10
				11
				12
				13
				14
				15
				16
				17
				18
				19
				20
				21
				22
				23
				24
				25
				26
				27
				28
				29
				30
				31
				32
				33
1204	48	1204	1214.5	34
				35
				36
				37
				38
				39
				40
				41
				42
				43
				44
				45
				46
				47
				48
93.40	2.75	99.39	43.72	49
SG Turbine Output	86.0	MWg		50
				51
				52
				53
				54
				55
				56
				57
				58
				59
				60
				61
				62
				63
				64
				65
77,571	57,302	97,825	36,000	66
				67
21.55	15.92	27.17	10.00	68
350	15	350	250	69
432	80	432	420	70

	BX	BY	BZ	CA	CB	CC	CD	CE	CF	CG	CH	CI
1	**Standardized IGCC Gasifier Cogen Application**								**Reference Coal -**			**Illinois #6**
2	**Mass & Energy Balance**				**MW 501 F**				**Predicted Gasifier Output**			
3	Stream No.		25		26					27		27a
4	Identification		Regen Recycle Loop		Conc SO2 Bleed					Elemental Sulfur		Elemental Sulfur
5	From		Recycle Blower		Regen Loop					Resox Process		DSRP
6	To		Regenerator		SRP					Marketable Byproduct		Marketable Byproduc
7	Gas	Mol Wt	lb/hr	wt%	lb/hr	lbs/mol	mols/hr	wt%	mol%	lb/hr	wt%	lb/hr
8												
9	CO	28.010			0	0.00	0.00	0.00	0.00			
10	H2	2.016			0	0.00	0.00	0.00	0.00			
11	CO2	44.010	242	0.05	20	0.02	0.46	0.05	0.04			
12	H2O	18.015	3,018	0.62	252	0.20	13.96	0.62	1.11			
13	CH4	16.042			0	0.00	0.00	0.00	0.00			
14	C2H6	30.068			0	0.00	0.00	0.00	0.00			
15	H2S	34.076			0	0.00	0.00	0.00	0.00			
16	COS	60.070			0	0.00	0.00	0.00	0.00			
17	N2	28.013	365,133	74.87	30,428	24.10	1086.20	74.87	86.02			
18	Ar	39.948	0	0.00	0	0.00	0.00	0.00	0.00			
19	HCl	36.461			0	0.00	0.00	0.00	0.00			
20	HCN	27.026			0	0.00	0.00	0.00	0.00			
21	NH3	17.030			0	0.00	0.00	0.00	0.00			
22	CS2	76.131			0	0.00	0.00	0.00	0.00			
23	SO2	64.059	113,996	23.37	9,500	7.52	148.30	23.37	11.74			
24	NO	30.006			0	0.00	0.00	0.00	0.00			
25	O2	31.999	5,296	1.09	441	0.35	13.79	1.09	1.09			
26	NaCl	58.497			0	0.00	0.00	0.00	0.00			
27	KCl	74.596			0	0.00	0.00	0.00	0.00			
28	Total Gas (lb/hr)		487,686	100.00	40,640	32.19	1263	100.00	100.00			
29												
30	Volumetric Flow Rates		(STP 14.7 psia, 59 F)									
31	(acfm)		17,143		1,352							
32	(scfm)		95,668		7,972							
33												
34	Heat (BTU/lb)											
35	Cp (BTU/lb F)		0.240		0.240					0.000		0.0
36	HHV (BTU/lb)											
37	LHV (BTU/lb)											
38	Sensible Heat above											
39	59 F Btu/lb steam											
40	Latent Heat of											
41	Water Btu/lb steam											
42												
43	Chemical Heat									18.90		18
44	(LHV) MBtu/hr											
45	Sensible Heat		156.96		12.10					0.00		0
46	above 59 F MBtu/hr											
47	Latent Heat		3.14		0.26					0.00		0
48	of Water MBtu/hr											
49	TotalHeat(MBtu/hr)		160.10		12.37					18.90		18
50												
51												
52	C	12.011										
53	H	1.008										
54	O	16.000										
55	N	14.007										
56	S	32.060								4,750		4,
57	CL2	35.500										
58	H2O	18.016										
59	ZnFe2O4											
60	ZnS											
61	FeS											
62	Fe2O3											
63	ZnO											
64	ASH				0.00			0				
65	Total Solids											
66	Total Flow (pph)		487,686		40,640					4,750		4,
67												
68	Total Flow (pps)		135.47		11.29					1.32		
69	Pressure (psia)		294		294					15		
70	Temperature (F)		1400		1300					284		

CI	CJ	CK	CL	CM
is #6	J-1538	DE-AC21-89MC26291		1
	Revision 7		10/16/90	2
27a	27b	28		3
nental Sulfur	Sulfur Dioxide	Ash		4
DSRP	SO2 Recovery Unit	SO2 Reductor		5
table Byproduct	Marketable Byproduct	Disposal		6
lb/hr	lb/hr	lb/hr	wt%	7
				8
				9
				10
				11
				12
				13
				14
				15
				16
				17
				18
				19
				20
				21
				22
				23
				24
				25
				26
				27
				28
				29
				30
				31
				32
				33
				34
0.000	0.000			35
				36
				37
				38
		154	0	39
				40
				41
				42
18.90	18.90	6.83	0	43
				44
0.00	0.00	0.00	0	45
				46
0.00	0.00	0.00	0	47
				48
18.90	18.90	6.83	0.4	49
				50
				51
		471	3	52
				53
				54
				55
4,750	4,750			56
				57
				58
				59
				60
				61
				62
				63
		16,666	97	64
		17,136	100	65
4,750	9,500	17,136	100	66
				67
1.32	2.64	4.76		68
15	100	15		69
190	59	284		70

200 MW Cogen Cycle
General Electric 7191 F

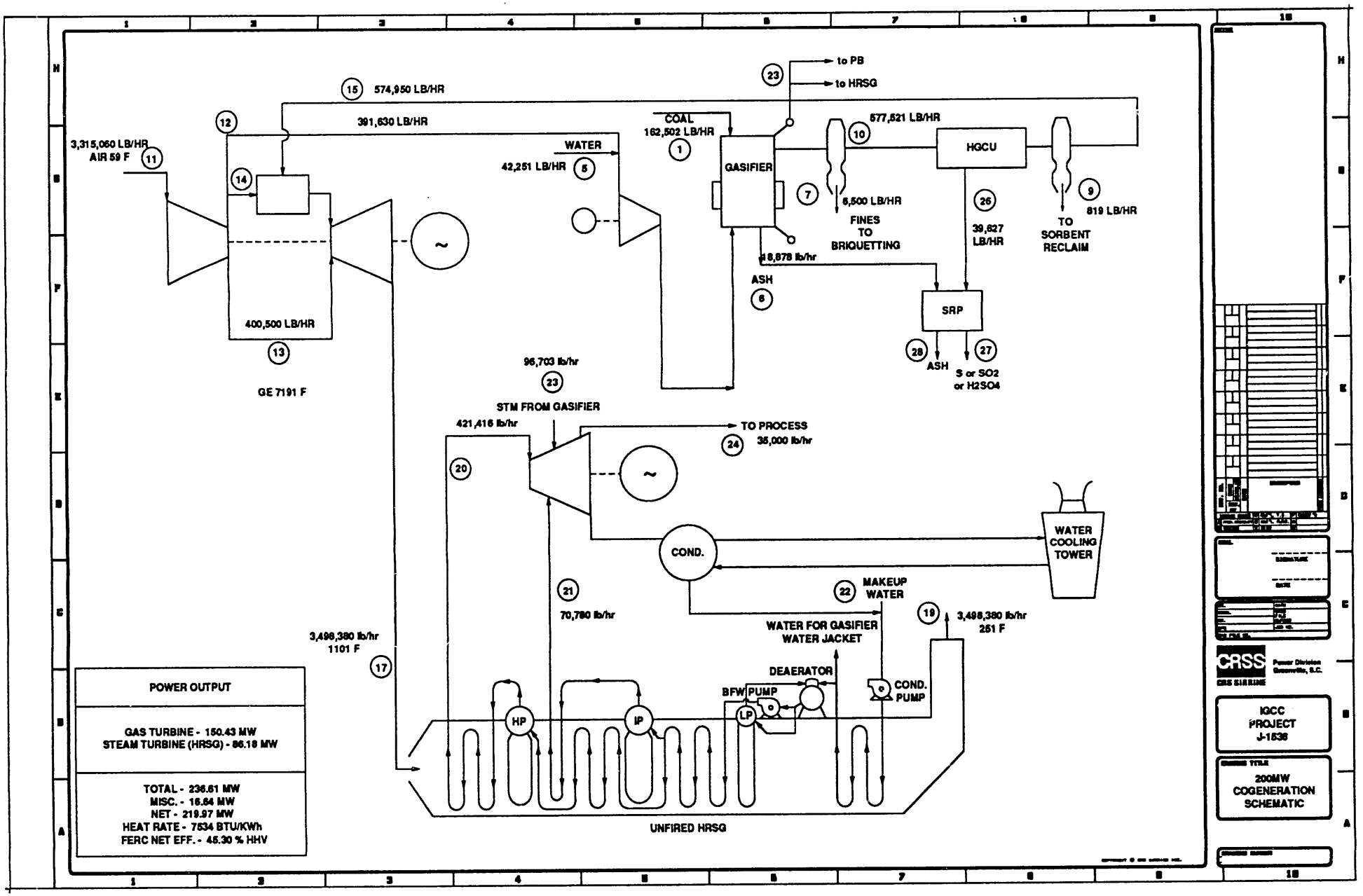
to PB
to HRSG
23
15 574,950 LB/HR
391,630 LB/HR
12
3,315,060 LB/HR
AIR 59 F
11
14
WATER
42,251 LB/HR
5
COAL
162,502 LB/HR
1
GASIFIER
577,521 LB/HR
10
HGCU
7
6,500 LB/HR
FINES
TO
BRIQUETTING
26
39,627
LB/HR
9
819 LB/HR
TO
SORBENT
RECLAIM
48,878 lb/hr
ASH
6
SRP
28
ASH
27
S or SO2
or H2SO4
400,500 LB/HR
13
GE 7191 F
96,703 lb/hr
23
STM FROM GASIFIER
421,416 lb/hr
TO PROCESS
24
35,000 lb/hr
20
COND.
WATER
COOLING
TOWER
21
70,780 lb/hr
22
MAKEUP
WATER
19
3,498,380 lb/hr
251 F
WATER FOR GASIFIER
WATER JACKET
3,498,380 lb/hr
1101 F
17
DEAERATOR
BFW PUMP
COND.
PUMP
HP
IP
LP
UNFIRED HRSG
POWER OUTPUT
GAS TURBINE - 150.43 MW
STEAM TURBINE (HRSG) - 86.18 MW
TOTAL - 236.61 MW
MISC. - 16.64 MW
NET - 219.97 MW
HEAT RATE - 7534 BTU/KWh
FERC NET EFF. - 45.30 % HHV
CRSS
Power Division
Greenville, S.C.
CRS SIRINE
IGCC
PROJECT
J-1536
200MW
COGENERATION
SCHEMATIC

IGCC 64 - 200 MW COGEN CYCLE
GENERAL ELECTRIC 7191 F

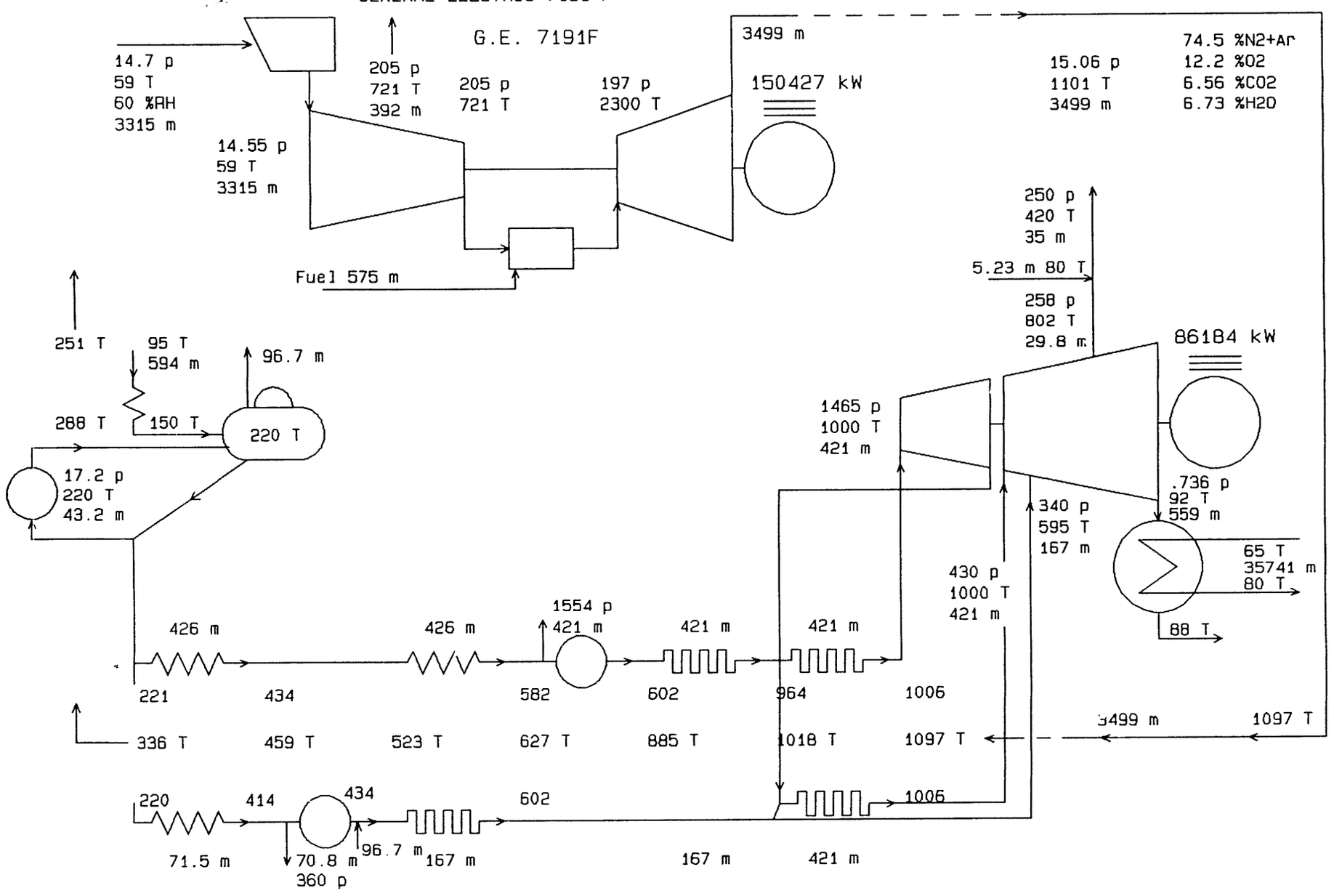

GTPRO 3.31 Michael Brown 10-15-1990 13:52:31
p psia, T F, m kpph

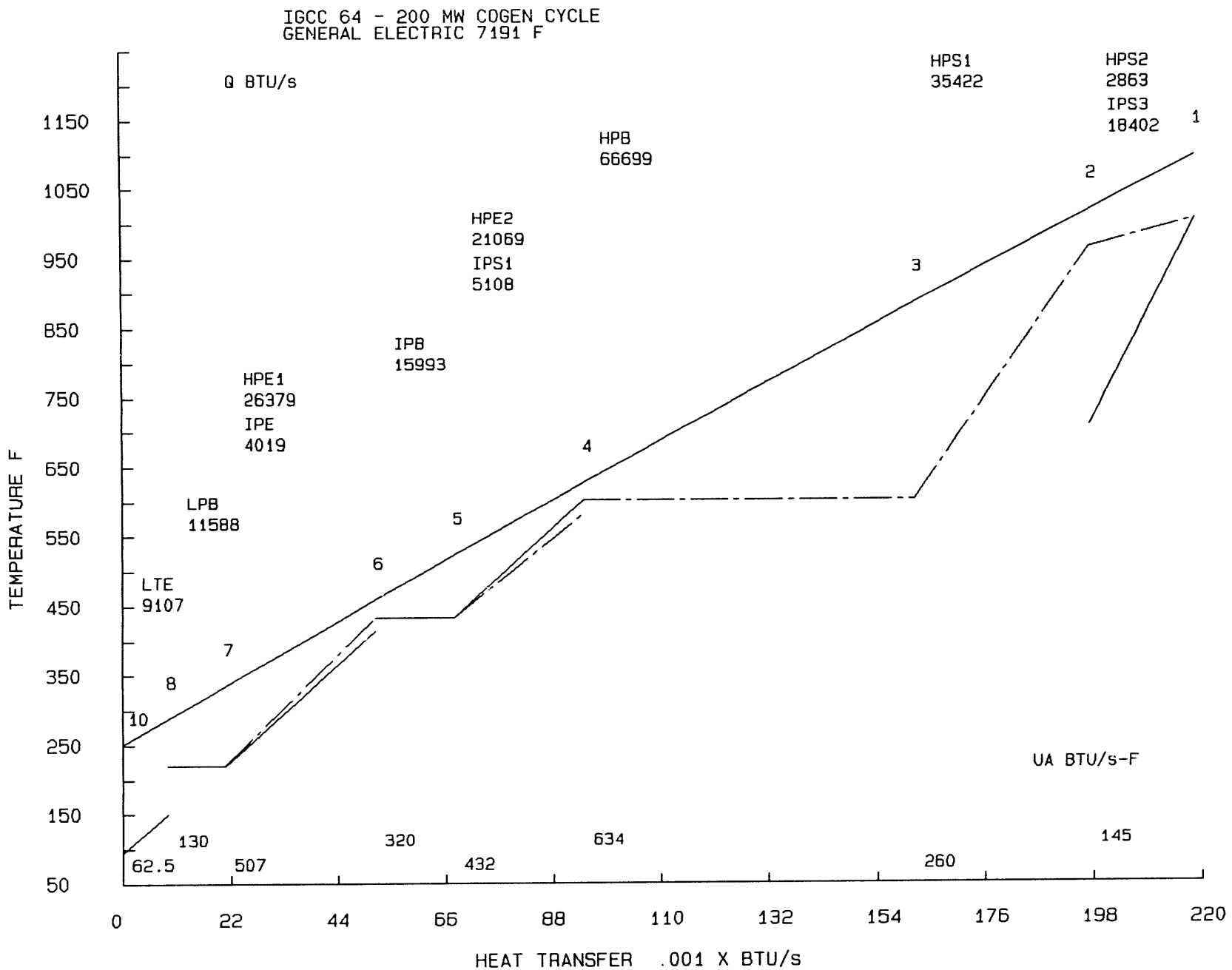

GTPRO 3.31 Michael Brown 10-15-1990 13:52:31

GTPRO 3.31 Michael Brown 10-15-1990 13:52:01
IGCC 64 - 200 MW COGEN CYCLE
GENERAL ELECTRIC 7191 F

ESTIMATED G.T. SITE PERFORMANCE

Fuel=Fuel G.T. @ 100 % rating, XIGV= 0
Site ambient conditions: 14.7 psia, 59 F, 60 % RH
Inlet loss= 4 inch H2O, exhaust loss= 10 inch H2O
Evap. inlet cooler to 0 % RH.

G.T. DEVIATION FROM NOMINAL, CLEAN ENGINE

Compressor inlet airflow % reduction = 0
Compressor efficiency reduction % = 0
Turbine efficiency reduction % = 0
Maximum firing temperature excess over base load = 0 F
Combustor % pressure loss (0 means nominal value) = 0
Combustor inefficiency + heat loss % (0 means nominal value) = 0
Cooling air increase % (0 means nominal value) = 0
Process air bleed location (0 means none) = 1
Process air bleed % of inlet = 11.81

#	Model	PR	TIT F	TET F	Mair kpph	kWe	H.R.LHV BTU/kWh	Mex kpph	N2+Ar %	O2 %	CO2 %	H2O %
	G.E. 7191F	14.1	2300	1101	3315	150427	10334	3499	74.51	12.20	6.56	6.73

Fuel flow = 575 kpph
G.T. auxillary power = 757 kWe.

ESTIMATED G.T. CYCLE

STREAM	TEMP. F	PRESS. psia	MASSFLOW kpph	M.W.	MOLE COMPOSITION % N2+Ar	O2	CO2	H2O
Ambient air in	59	14.70	3315.07	28.75	78.22	20.74	0.03	1.01
Compr. inlet	59	14.55	3315.07	28.75	78.22	20.74	0.03	1.01
Turbine coolant	misc.		400.51					
Process air bld	721	204.77	391.51	28.75	78.22	20.74	0.03	1.01
Compr. disch.	721	204.77	2523.05	28.75	78.22	20.74	0.03	1.01
Turbine inlet	2300	196.58	3098.00	28.89	74.03	11.09	7.40	7.47
Turbine exhaust	1101	15.06	3498.51	28.88	74.51	12.20	6.56	6.73

Compressor= 158298 Turbine= 311782 Mech. loss= 921 kW
Turbine coolant= 12.1 % compr in
GT specific power @ gen term= 45.4 kW per kpph
GT efficiency @ gen term= 30.38 % HHV = 33.02 % LHV

GAS TURBINE/GENERATOR HEAT BALANCE

Energy in = 481473 BTU/s

Inlet air Sensible	Inlet air Latent	Water Inj.	Steam Inj.	Fuel HHV
6063	6131	0	0	469279

Energy out = 481885 BTU/s

Incompl comb & carcass rad	GT Mech. Losses	Gearbox Loss	Generator Loss	Exhaust Sensible	Exhaust Latent	Electric Output	Proc Air
1295	585	0	2037	273152	42892	142585	19339

Zero enthalpy: dry gases & liquid water @ 32 F (273.15 K)
Heat Balance Error = In - Out =-412 BTU/s =-.086 %

GTPRO 3.31 Michael Brown 10-15-1990 13:52:11 Steam cycle p.1
IGCC 64 - 200 MW COGEN CYCLE
GENERAL ELECTRIC 7191 F
Type: 10 Subtype: 3 Induction

	p psia	T F	h BTU/lb	m kpph	UA BTU/s-F	Q BTU/s	A sq.ft
Cnd rtrn	0.74	87.57	55.58	559.136			
Stm rtrn	17.72	250.00	218.49	26.250			
Makeup	17.72	80.00	48.02	13.672	(Includes 5.23 kpph for desup)		
FW supl	17.72	94.68	62.67	593.828			
LTE				593.828	62	9107	30677
from LTE	17.20	150.00	117.88	593.828			
LPB				43.212	130	11588	58735
water bleed				96.700			
htd. FW	17.20	220.00	188.13	497.128			
HPFW	1648.87	221.31	194.33	425.641			
HPE1				425.641	453	26379	212870
6	1600.84	434.18	417.45	0.000			
HPE2				425.641	330	21069	149181
7	1577.53	581.98	595.64	0.000			
HPE3				425.641	0	0	0
8	1554.22	581.98	595.64	0.000			
Blwdn	1554.22	601.98	619.75	4.214			
HPB				421.426	634	66700	262673
9	1554.22	601.98	1165.18	0.000			
HPS1				421.426	260	35423	136130
10	1508.95	964.41	1467.77	0.000			
HPS2				421.426	41	2863	21265
11	1508.95	1006.00	1492.23	0.000			
Into HPT	1465.00	1000.00	1490.10	421.426			
R/H extr	456.25	708.84	1366.34	421.426			
stm addn	456.25	457.25	1205.59	0.000			
cold R/H	456.25	708.84	1366.34	421.426			
into HPT	430.06	1000.00	1520.70	421.426			
HPT exit	339.81	948.70	1496.20	421.426			
IPFW	371.32	220.29	189.48	71.487			
IPE				71.487	54	4019	25501
1	360.50	414.18	391.86	0.000			
Blwdn	360.50	434.18	412.73	0.708			
IPB				70.779	320	15993	138313
Stm addn	360.50	434.18	1205.09	96.700			
2	360.50	434.18	1205.09	0.000			
IPS1				167.479	102	5108	56362
3	350.00	601.98	1314.90	0.000			
IPS2				167.479	0	0	0
4	350.00	601.98	1314.90	0.000			
cold R/H	456.25	708.84	1366.34	421.426			
IPS3				421.426	104	18402	54082
5	442.96	1006.00	1523.54	0.000			
Into LPT	339.81	848.18	1443.79	588.906			
LPT bld.	257.50	801.83	1422.88	29.769			
Desuperhtr				5.231			
LPT proc	250.00	420.00	1214.85	35.000			
LPT exit	0.74	91.57	1014.40	559.136			

STEAM TURBINE

	No. of steps	Exit Quality	Efficiency(%)	Work (kW)
To HPT exit	1	1.365	67.78	18310
To LPT bleed	1	1.268		
To LPT exit	15	0.916	86.81	70539

Gross power = 88849 kW. Mech/Elect losses = 2665 kW.
Generator output = 86184 kWe. ST auxiliaries = 603 kWe
Boiler feedpumps = 897 kWe

CONDENSER

	P psia	T F	h BTU/lb	m kpph
LPT exit	0.7365	91.57	1014.40	559.14
Saturation	0.7365	91.57		
Condensate well	0.7365	87.57	55.58	559.14
Cooling water in		65.00		35741.08
Cooling water out		80.00		35741.08

Number of passes= 1 UA= 8265 BTU/s-F Surface area = 40429 sq.ft
Tubes: OD = 1 in Length= 38.6 ft number= 4004
Cooling water: Velocity= 9 ft/s DP = 9.02 psia Pumps = 403 kWe.

STEAM CYCLE HEAT BALANCE

Energy in = 350949 BTU/s

GT Exhaust Sensible	GT Exhaust Latent	Duct Burner Fuel HHV	Makeup+Proc Return	Pump Work	External Steam
273152	42892	0	1776	760	32370

Energy out = 350810 BTU/s

Heat Radiated	Blow down	Mech/Elec Losses	Stack Sens.	Stack Latent	Condnsr C.W.	Process Steam	GT Injec.	Proc. Water	Electric Output
3868	807	2527	53240	42892	148921	11811	0	5053	81691

Zero enthalpy: dry gases & liquid water @ 32 F (273.15 K)
Heat Balance Error = In - Out = 138 BTU/s = .039 %

HRSG GAS-SIDE PROFILE

Gas	Tg F	Tw F HP/IP	DT F HP/IP	Qg/UA F	DELTA P inch H2O	UA BTU/s-F	Qg BTU/s	Vg ft/s	Tube Rows	Lngth ft
1	1096.8	1006.0	90.8							
1	1096.8	1006.0	90.8							
				147.8	0.9	145.3	21478.0	55.4	3.7	1.6
	1017.9	964.4	53.5							
	1017.9	708.8	309.1							
2	1017.9	964.4	53.5							
				137.7	1.4	259.9	35776.9	51.5	6.7	2.8
	884.7	602.0	282.7							
3	884.7	602.0	282.7							
				106.2	2.3	634.1	67366.9	44.4	13.0	5.4
	627.0	602.0	25.0							
4	627.0	582.0	45.0							
4	627.0	602.0	25.0							
				61.2	1.5	431.9	26438.6	37.8	10.2	4.2
	523.3	434.2	89.1							
	523.3	434.2	89.1							
5	523.3	434.2	89.1							
				50.4	0.9	320.3	16152.9	34.7	6.8	2.9
	459.2	434.2	25.0							
6	459.2	434.2	25.0							
6	459.2	414.2	45.0							
				60.6	1.4	506.9	30701.9	31.3	11.8	4.9
	335.9	221.3	114.6							
	335.9	220.3	115.6							
7	335.9	220.0	115.9							
				90.1	0.3	129.9	11703.7	28.2	2.9	1.2
	288.5	220.0	68.5							
8	288.5	150.0	138.5							
				147.2	0.1	62.5	9198.6	26.6	1.5	0.6
	251.0	94.7	156.3							

Duct burner fuel= 0 kpph
Gas mole composition: 74.5 %N2+Ar 12.2 %O2 6.56 %CO2 6.73 %H2O .002 %SO2
Flue gas dew point = 101 F M.W.= 28.9

HRSG TOTALS	Economisers	Evaporators	Superheaters	TOTAL
Q BTU/s	60574	94281	61796	216651
UA BTU/s-F	899	1084	507	2491
A sq.ft	418229	459721	267839	1145790

Prime surface= 66651 fin surface= 1079138 sq.ft. Averaged fin eff.= .732
HRSG frontal area = 1335 sq.ft. Gas mass flux= 5.2 kpph/sq.ft
HRSG length = 23.6 ft, 56.7 tube rows, 3205 ft of tubes per row.
2 in dia. tubes with serrated fins, staggered arrangement.
Fin thickness/dia.= .03 , height/dia.= .4 , spacing/dia.= .07
Tube transverse pitch/dia.= 2.5 , row longitudinal pitch/dia.= 2.5

GE 7191 F

Water cooling

air to coal ratio	2.41	air pressure	204	Cp air	0.248
water coal ratio	0.152	air temperature	721	Cp water	1.000
air to water ratio	15.91	water temperature	80	Cp steam	0.455

	lb	wt %	mols	mol %	partial pressure
air	15.91	94.09%	0.55	90.88%	185.39
water	1.00	5.91%	0.06	9.12%	18.61

sat temp 224

Temperature of combined stream entering boost compressor

400.52 F sat pressure 247 psia Rel. Hum. 7.53%

Temperature of stream exiting compressor (85% comp eff)

Tf = Ti + (Ti/n*{(Pf/Pi)^((k-1)/k)-1})

where
Ti - inlet temperature - 400.52 F - 860.52 R
n - efficiency - 85.00%
k - ratio of specific heat @ constant pressure to specific
to specific heat @ constant volume 1.384
Pf - final pressure 350 psia
Pi - initial pressure 204 psia

Tf = 564.09 F

	A	B	C	D	E	F	G	H	I	J	K	L	M	N	O
1	Standardized IGCC Gasifier Cogen Application													Reference Coal -	
2	Mass & Energy Balance					GE 7191 F		Plant		Full Load				Predicted Gasifier Out	
3	Stream No.			1		2		3		4				5	
4	Identification			AR Coal		Coal Fines		Sized Coal		CompAir@	2.41 A/C			Water @	0.26
5	From			Illinois #6		Sizer @	30%	Combined Streams		Aux Compr &/or Booster Compr				Cooling Water	H2O/
6	To			Sizer		Briquetting		Gasifier		Gasifier				Gasifier	Coal
7	Gas	Mol Wt		lb/hr	wt %	lb/hr	wt %	lb/hr	wt %	lb/hr	lb/mol	wt %	mol%	lb/hr	
8															
9	CO	28.010								0	0.00	0.00	0.00		
10	H2	2.016								0	0.00	0.00	0.00		
11	CO2	44.010								185	0.01	0.05	0.03		
12	H2O	18.015								2,490	0.18	0.64	1.02	42,251	
13	CH4	16.042								0	0.00	0.00	0.00		
14	C2H6	30.068								0	0.00	0.00	0.00		
15	H2S	34.076								0	0.00	0.00	0.00		
16	COS	60.070								0	0.00	0.00	0.00		
17	N2	28.013								293,822	21.65	75.03	77.28		
18	Ar	39.948								5,144	0.38	1.31	0.95		
19	HCl	36.461								0	0.00	0.00	0.00		
20	HCN	27.026								0	0.00	0.00	0.00		
21	NH3	17.030								0	0.00	0.00	0.00		
22	CS2	76.131								0	0.00	0.00	0.00		
23	SO2	64.059								0	0.00	0.00	0.00		
24	NO	30.006								0	0.00	0.00	0.00		
25	O2	31.999								89,988	6.63	22.98	20.72		
26	NaCl	58.497								0	0.00	0.00	0.00		
27	KCl	74.596								0	0.00	0.00	0.00		
28	Total Gas (lb/hr)									391,630	28.86	100.00	100.00	42,251	
29															
30	Volumetric Flow Rates			(STP 14.7 psia, 59F)											
31	(acfm)									7,101					
32	(scfm)									85,691					
33															
34	Heat (BTU/lb)													1315	
35	Cp (BTU/lb F)									0.250					
36	HHV (BTU/lb)			10,776		10,776		10,776		0					
37	LHV (BTU/lb)			10,239		10,239		10,260		0					
38	Sensible Heat above														
39	59 F Btu/lb steam			0		0		0		126					
40	Latent Heat of														
41	Water Btu/lb steam									7					
42															
43	Chemical Heat			1663.87		499.16		1734.09		0.00					
44	(LHV) MBtu/hr														
45	Sensible Heat			0.00		0.00		0.00		49.36					
46	above 59 F MBtu/hr														
47	Latent Heat			87.26		26.18		87.26		2.59					
48	of Water MBtu/hr														
49	TotalHeat(MBtu/hr)			1751.12		525.34		1821.34		51.95				55.56	
50				Number of Gasifiers for 85% Plant Availability @90% Gasifier Availability,										350	psia
51															
52	C	12.011		97,680	60.11%	29,304	60.11%	102,724	60.78%		51				
53	H	1.008		6,776	4.17%	2,033	4.17%	6,776	4.01%		277			4,695	
54	O	16.000		12,301	7.57%	3,690	7.57%	12,301	7.28%		92,336			37,556	
55	N	14.007		1,918	1.18%	575	1.18%	1,918	1.13%		293,822			42,251	Total
56	S	32.060		4,680	2.88%	1,404	2.88%	4,680	2.77%		386,486	Total			
57	CL2	35.500		0	0.00%	0	0.00%	0	0.00%		-				
58	H2O	18.016		22,913	14.10%	6,874	14.10%	22,913	13.56%						
59	ZnFe2O4														
60	ZnS														
61	FeS														
62	Fe2O3														
63	ZnO														
64	ASH			16,250	10.00%	4,875	10.00%	17,706	10.48%						
65	Total Solids			162,502	100.01%	48,751	100.01%	169,018	100.00%						
66	Total Flow (pph)			162,502 *		48,751		169,018		391,630				42,251	
67															
68	Total Flow (pps)			45.14		13.54		46.95		108.79				11.74	
69	Pressure (psia)			14.7		14.7		14.7		350 *				350 *	
70	Temperature (F)			59		59		59		564 *				564 *	

	O	P	Q	R	S	T	U	V	W	X	Y	Z	AA	AB	AC	AD
al -		Illinois #6								J-1538		DE-AC21-89MC26291				1
ifier Output				10/16/90				Revision 7								2
		6	Uncomb	7		8		9				10	55 scf/lb of coal			3
	0.26	Ash	Carbon	Fines (Char)		Tar		Dust(per RTI dia)		Miscellaneous		Hot Gas with Tars				4
ter	H2O/	Gasifier	2.69%	Gasifier @	4.00%	Gasifier @	6.00%	Final Cyclone		Gasifier Heat		Gasifier	N2 in coal			5
	Coal	Ash Silo		Briquetting		HGCU		Reclaim		Losses		HGCU	to NH3 Conv		90.1%	6
		lb/hr	wt %	lb/hr	wt %	lb/hr	wt %	lb/hr	wt %			lb/hr	lb/mol	wt %	mol %	7
																8
												151,655	6.39	26.26	22.82	9
												6,823	0.29	1.18	14.26	10
												67,867	2.86	11.75	6.50	11
2,251												29,486	1.24	5.11	6.90	12
												12,391	0.52	2.15	3.26	13
												2,457	0.10	0.43	0.34	14
												4,263	0.18	0.74	0.53	15
												1,254	0.05	0.22	0.09	16
												294,011	12.39	50.91	44.24	17
												5,144	0.22	0.89	0.54	18
												0	0.00	0.00	0.00	19
												200	0.01	0.03	0.03	20
												1,972	0.08	0.34	0.49	21
												0	0.00	0.00	0.00	22
												0	0.00	0.00	0.00	23
												0	0.00	0.00	0.00	24
												0	0.00	0.00	0.00	25
												0	0.00	0.00	0.00	26
												0	0.00	0.00	0.00	27
4,251												577,521	24.34	100.00	100.00	28
																29
												577,521				30
												23,977				31
												149,856				32
																33
1315																34
		0.260		0.260		0.26		0.260				0.329				35
		0		10,936		17,329		0				2,588.8				36
		0		10,936		16,571		0				2,375.0				37
																38
		154		276		276		323				349				39
																40
		0		0		749		0				214				41
																42
		38.10		71.09		161.57		0.00				1371.59				43
																44
		2.90		1.79		2.69		0.26		98.3 Water/steam jacket		201.37				45
																46
		0.00		0.00		7.30		0.00		22.9 Traversing Stirrer		123.52	Gas HHV=	189	Btu/scf	47
													Estimated=	628	Btu/lb	48
15.56		41.00		72.88		171.56		0.26		121.1 Total		1696.49	Calculated=	639	Btu/lb	49
psia & 17 tph (typical) Coal each:					6.7		Unit Output (MWn)			220.0 MWn			BulkGas=	4.67%	H2O	50
													Calc Comb Temp (F)		2335	51
		2,628	13.92	5,044	77.60%	8,580	88.00%					95,103	95,102	0.00%		52
695				0	0.00%	780	8.00%					14,293	14,294	0.00%		53
556				0	0.00%	195	2.00%					162,561	162,561	0.00%		54
251	Total			0	0.00%	98	1.00%					295,740	295,739	0.00%		55
		0	0.00	0	0.00%	98	1.00%					4,680	4,681	-0.02%		56
				0	0.00%						Sub-Totals	572,377	572,377	0.00%		57
				0	0.00%							Sum of	Sum of Gas	Mass		58
								737	90			Streams	Constituents	Unbalance		59
								16	2			balance check				60
								49	6			FERC Cycle Efficiency(g)= 48.54%				61
								0	0			FERC Cycle Efficiency(n)= 45.30%				62
								16	2							63
		16,250	86.08	1,456	22.40%			0	0							64
		18,878	100	6,500	100.00%	9,750	100.00%	819	100							65
251		18,878		6,500		9,750		819				577,521				66
																67
1.74		5.24		1.81		2.71		0.23				160.42				68
350 *		14.7		350 *		350 *		280				280				69
566 *		650		1120		1120		1300				1120				70

	AE	AF	AG	AH	AI	AJ	AK	AL	AM	AN	AO	AP	AQ	AR
1	Standardized IGCC Gasifier Cogen Application											Reference Coal -		Ill
2	Mass & Energy Balance			GE 7191 F			Plant					Predicted Gasifier Out		
3	Stream No.		11				12				13	14		
4	Identification		Air				Bleed Air				Bleed Air	Compressor Discharge		
5	From		Atmosphere				Compressor				for	Comp sssor		
6	To		Gas Turbine Compressor				Booster Compressor Cooler				Coolant	Combustor		
7	Gas	Mol Wt	lb/hr	lb/mol	wt %	mol %	lb/hr	lb/mol	wt %	mol %	lb/hr	lb/hr	lb/mol	wt %
8														
9	CO	28.010	0	0.00	0.00	0.00	0	0.00	0.00	0.00	0	0	0.00	0.00
10	H2	2.016	0	0.00	0.00	0.00	0	0.00	0.00	0.00	0	0	0.00	0.00
11	CO2	44.010	1,570	0.01	0.05	0.03	185	0.01	0.05	0.03	190	1,195	0.01	0.05
12	H2O	18.015	21,077	0.18	0.64	1.02	2,490	0.18	0.64	1.02	2,546	16,041	0.18	0.64
13	CH4	16.042	0	0.00	0.00	0.00	0	0.00	0.00	0.00	0	0	0.00	0.00
14	C2H6	30.068	0	0.00	0.00	0.00	0	0.00	0.00	0.00	0	0	0.00	0.00
15	H2S	34.076	0	0.00	0.00	0.00	0	0.00	0.00	0.00	0	0	0.00	0.00
16	COS	60.070	0	0.00	0.00	0.00	0	0.00	0.00	0.00	0	0	0.00	0.00
17	N2	28.013	2,487,140	21.65	75.03	77.28	293,822	21.65	75.03	77.28	300,477	1,892,840	21.65	75.03
18	Ar	39.948	43,543	0.38	1.31	0.95	5,144	0.38	1.31	0.95	5,260	33,138	0.38	1.31
19	HCl	36.461	0	0.00	0.00	0.00	0	0.00	0.00	0.00	0	0	0.00	0.00
20	HCN	27.026	0	0.00	0.00	0.00	0	0.00	0.00	0.00	0	0	0.00	0.00
21	NH3	17.030	0	0.00	0.00	0.00	0	0.00	0.00	0.00	0	0	0.00	0.00
22	CS2	76.131	0	0.00	0.00	0.00	0	0.00	0.00	0.00	0	0	0.00	0.00
23	SO2	64.059	0	0.00	0.00	0.00	0	0.00	0.00	0.00	0	0	0.00	0.00
24	NO	30.006	0	0.00	0.00	0.00	0	0.00	0.00	0.00	0	0	0.00	0.00
25	O2	31.999	761,731	6.63	22.98	20.72	89,988	6.63	22.98	20.72	92,026	579,716	6.63	22.98
26	NaCl	58.497	0	0.00	0.00	0.00	0	0.00	0.00	0.00	0	0	0.00	0.00
27	KCl	74.596	0	0.00	0.00	0.00	0	0.00	0.00	0.00	0	0	0.00	0.00
28	Total Gas (lb/hr)		3,315,060	28.86	100.00	100.00	391,630	28.86	100.00	100.00	400,500	2,522,930	28.86	100.00
29														
30	Volumetric Flow Rates (STP 14.7 psia, 59F)													
31	(acfm)		725,352				14,003					90,208		
32	(scfm)		725,352				85,691				88,259	552,030		
33														
34	hgAdiabHeat(BTU/lb)													
35	Cp (BTU/lb F)		0.240				0.255					0.255		
36	HHV (BTU/lb)		0.0				0.0					0.0		
37	LHV (BTU/lb)		0.0				0.0					0.0		
38	Sensible Heat													
39	above 59 F Btu/lb		0				169					169		
40	Latent Heat													
41	of Water Btu/lb		7				7					7		
42														
43	Chemical Heat		0.00				0.00					0.00		
44	(LHV) MBtu/hr													
45	Sensible Heat		0.00				66.09					425.73		
46	above 59 F MBtu/hr													
47	Latent Heat		21.92				2.59					16.68		
48	of Water MBtu/hr													
49	TotalHeat(MBtu/hr)		21.92				68.68					442.42		
50												Parasitic Load		16.64 MV
51														
52	C	12.011		428				51			52		326	326
53	H	1.008		2,342				277			283		1,782	1,782
54	O	16.000		781,608				92,336			94,428		594,843	594,843
55	N	14.007		2,487,140				293,822			300,477		1,892,840	1,892,840
56	S	32.060		0				0			0		0	0
57	CL2	35.500		3,271,517	sub-totals			386,486	sub-totals		395,240	sub-totals	2,489,792	2,489,792
58	H2O	18.016											balance check	
59	ZnFe2O4													
60	ZnS													
61	FeS													
62	Fe2O3													
63	ZnO													
64	ASH													
65	Total Solids													
66	Total Flow (pph)		3,315,060				391,630				400,500	2,522,930		
67														
68	Total Flow (pps)		920.85 *				108.79			*	111.25	700.81		
69	Pressure (psia)		14.7 *				205 *					205		
70	Temperature (F)		59 *				721 *					721		

Illinois #6

r Output

J-1538

Revision 7

DE-AC21-89MC26291

10/16/90

R	AS	AT	AU	AV	AW	AX	AY	AZ	BA	BB	BC	BD	BE	BF	BG
															1
															2
		15				16						17			3
		Fuel			%H2S	Inlet Gas		Thrml NO (ppmvd)		25	Exhaust Gas				4
		HGCU			Removed	GT Combustor		*Rich/Lean Red. F		85%	Gas Turbine				5
		GT Combustor			99.0%	GT Expander									6
%	mol %	lb/hr	mol/hr	wt %	mol %	lb/hr	lb/mol	mols	wt %	mol%	lb/hr	mols/hr	wt %	mol%	7
0.00	0.00	151,655	5,414	26.38	22.84	0	0.00	0.00	0.00	0.00	0	0.00	0.00	0.00	8
0.00	0.00	6,738	3,342	1.17	14.10	0	0.00	0.00	0.00	0.00	0	0.00	0.00	0.00	9
0.05	0.03	67,867	1,542	11.80	6.51	348,992	3.27	0.0026	11.27	7.42	349,182	7934.15	9.98	6.57	10
0.64	1.02	32,461	1,802	5.65	7.60	144,668	1.35	0.00	4.67	7.52	147,214	8171.77	4.21	6.77	11
0.00	0.00	12,391	772	2.16	3.26	0	0.00	0.00	0.00	0.00	0	0.00	0.00	0.00	12
0.00	0.00	2,457	82	0.43	0.34	0	0.00	0.00	0.00	0.00	0	0.00	0.00	0.00	13
0.00	0.00	43	1	0.01	0.01	0	0.00	0.00	0.00	0.00	0	0.00	0.00	0.00	14
0.00	0.00	13	0	0.00	0.00	0	0.00	0.00	0.00	0.00	0	0.00	0.00	0.00	15
5.03	77.28	294,011	10,496	51.14	44.28	2,188,220	20.48	0.0252	70.64	73.12	2,488,697	88840.79	71.14	73.39	16
1.31	0.95	5,144	129	0.89	0.54	38,282	0.36	0.00	1.24	0.90	43,542	1089.97	1.24	0.90	17
0.00	0.00	0	0	0.00	0.00	0	0.00	0.00	0.00	0.00	0	0.00	0.00	0.00	18
0.00	0.00	200	7	0.03	0.03	0	0.00	0.00	0.00	0.00	0	0.00	0.00	0.00	19
0.00	0.00	1,972	116	0.34	0.49	0	0.00	0.00	0.00	0.00	0	0.00	0.00	0.00	20
0.00	0.00	0	0	0.00	0.00	0	0.00	0.00	0.00	0.00	0	0.00	0.00	0.00	21
0.00	0.00	0	0	0.00	0.00	94	0.0009	0.0000	0.0030	0.0014	94	1.46	0.00	0.00	22
0.00	0.00	0	0	0.00	0.00	769	0.0072	0.0000	0.0248	0.0240	769	25.63	0.02	0.02	23
4.98	20.72	0	0	0.00	0.00	376,859	3.53	0.0038	12.17	11.02	468,886	14653.14	13.40	12.14	24
0.00	0.00	0	0	0.00	0.00	0	0.00	0.00	0.00	0.00	0	0.00	0.00	0.00	25
0.00	0.00	0	0	0.00	0.00	0	0.00	0.00	0.00	0.00	0	0.00	0.00	0.00	26
0.00	100.00	574,950	23,704	100.00	100.00	3,097,880	29.00	0.0345	100.00	100.00	3,498,380	120716.92	100.00	100.00	27
						3,097,884 bal ck					3,498,384 bal ck				28
		24,854													29
		149,658				268,214					2,227,229				30
						674,536					762,169				31
															32
		0.334													33
		2,548.9				0.284					0.267				34
		2,330.0				0.0					0.0				35
						0.0					0				36
		375													37
						636					279				38
		219													39
						49					44				40
		1339.65													41
						0.00					0.00				42
		215.32													43
						1971.63					974.94				44
		125.82													45
						150.45					153.10				46
		1680.79													47
						2122.08	2123.21 bal chk				1128.04				48
															49
											1.06 Turbine Compressor Surge Margin				50
															51
	0.00%		94,854			95,180	95,180	0.00%			95,231	95,231	0.00%		52
	0.00%		14,292			16,074	16,074	0.00%			16,357	16,357	0.00%		53
	0.00%		164,875			759,718	759,723	0.00%			854,151	854,151	0.00%		54
	0.00%		295,739			2,188,579	2,188,579	0.00%			2,489,056	2,489,056	0.00%		55
	0.00%		47			47	47	0.10%			47	47	0.00%		56
	0.00%		569,806	sub-total		3,059,598	3,059,603	0.00%	sub-total		3,454,842	3,454,842	0.00%	sub-total	57
								balance check					balance check		58
															59
															60
															61
															62
															63
															64
		574,950				3,097,880					3,498,380				65
															66
		159.71				860.52					971.77				67
		279.7				197 *					15.13				68
		1180				2,300 *					1101 *				69
															70

MWg

Combustion Turbine Output 150.427 MWg

	BH	BI	BJ	BK	BL	BM	BN	BO	BP	BQ	BR	BS
1	Standardized IGCC Gasifier Cogen Application						Reference Coal -			Illinois #6		
2	Mass & Energy Balance			GE 7191 F			Predicted Gasifier Output					
3	Stream No.		18				19	Thrml NO (ppmvd)		25	20	21
4	Identification		Fuel for Supplementary Firing				Flue Gas		SCR Red F	80 %	Superheated Steam	Low Pressure Ste
5	From		Gasifier				HRSG		R/L Red F	85 %	HRSG	HRSG
6	To		HRSG				Stack		NOx Reburn F	0 %	Steam Turbine	Steam Turbine
7	Gas	Mol Wt	lb/hr	lb/mol	wt %	mol %	lb/hr	mols/hr	wt %	mol %	lb/hr	lb/hr
8												
9	CO	28.010	0	6.39	26.26	22.82	0	0.00	0.00	0.00		
10	H2	2.016	0	0.29	1.18	14.26	0	0.00	0.00	0.00		
11	CO2	44.010	0	2.86	11.75	6.50	349,182	7934.15	9.98	6.57		
12	H2O	18.015	0	1.24	5.11	6.90	147,214	8171.77	4.21	6.77		
13	CH4	16.042	0	0.52	2.15	3.26	0	0.00	0.00	0.00		
14	C2H6	30.068	0	0.10	0.43	0.34	0	0.00	0.00	0.00		
15	H2S	34.076	0	0.18	0.74	0.53	0	0.00	0.00	0.00		
16	COS	60.070	0	0.05	0.22	0.09	0	0.00	0.00	0.00		
17	N2	28.013	0	12.39	50.91	44.24	2,488,697	88840.79	71.15	73.61		
18	Ar	39.948	0	0.22	0.89	0.54	43,542	1089.97	1.24	0.90		
19	HCl	36.461	0	0.00	0.00	0.00	0	0.00	0.00	0.00		
20	HCN	27.026	0	0.01	0.03	0.03	0	0.00	0.00	0.00		
21	NH3	17.030	0	0.08	0.34	0.49	0	0.00	0.00	0.00		
22	CS2	76.131	0	0.00	0.00	0.00	0	0.00	0.00	0.00	Stack Emissions (lb/MBtu)	
23	SO2	64.059	0	0.00	0.00	0.00	94	1.46	0.00	0.00	0.053	
24	NO	30.006	0	0.00	0.00	0.00	154	5.13	0.00	0.00	0.09	
25	O2	31.999	0	0.00	0.00	0.00	468,886	14653.14	13.41	12.14		
26	NaCl	58.497	0	0.00	0.00	0.00	0	0.00	0.00	0.00		
27	KCl	74.596	0	0.00	0.00	0.00	0	0.00	0.00	0.00		
28	Total Gas (lb/hr)		0	24.34	100.00	100.00	3,497,765	120696.42	100.00	100.00		
29							3,497,769	bal chk				
30	Volumetric Flow Rates (STP 14.7 psia, 59F)											
31	(acfm)		0				1,043,949					
32	(scfm)		0				762,039					
33												
34	Heat (BTU/lb)										1490.1	
35	Cp (BTU/lb F)		0.334				0.249					
36	HHV (BTU/lb)		2548.9				0.0					
37	LHV (BTU/lb)		2330.0				0					
38	Sensible Heat above											
39	59 F Btu/lb steam		0				48					
40	Latent Heat of											
41	Water Btu/lb steam		0				44					
42												
43	Chemical Heat		0.00				0.00					
44	(LHV) MBtu/hr											
45	Sensible Heat		0.00				166.92					
46	above 59 F MBtu/hr											
47	Latent Heat		0.00				153.10					
48	of Water MBtu/hr											
49	TotalHeat(MBtu/hr)		0.00				320.03				627.95	
50											HRSG Turbine Ou	
51												
52	C	12.011		0			95,231	95,231	0.00%			
53	H	1.008		0			16,357	16,357	0.00%			
54	O	16.000		0			853,823	853,823	0.00%			
55	N	14.007		0			2,488,769	2,488,769	0.00%			
56	S	32.060		0			47	47	0.00%			
57	CL2	35.500		0	sub-total		3,454,227	3,454,227	0.00%	sub-total		
58	H2O	18.016										
59	ZnFe2O4											
60	ZnS											
61	FeS											
62	Fe2C3											
63	ZnO											
64	ASH											
65	Total Solids											
66	Total Flow (pph)		0				3,498,380				421,416	7
67												
68	Total Flow (pps)		0 *				971.77				117.06	
69	Pressure (psia)		279.7				14.7				1465	
70	Temperature (F)		1180				251 *				1000	

BS	BT	BU	BV	BW
	J-1538	DE-AC21-89MC26291		1
	Revision 7		10/16/90	2
21	22	23	24	3
Pressure Steam	Make Up Water	Sat. Steam	Process Stm	4
HRSG	WaterTreatment	Gasifier	Stm Turbine	5
Steam Turbine	HRSG	HRSG	Process Facility	6
lb/hr	lb/hr	lb/hr	lb/hr	7
				8
				9
				10
				11
				12
				13
				14
				15
				16
				17
				18
				19
				20
				21
				22
				23
				24
				25
				26
				27
				28
				29
				30
				31
				32
				33
1204	48	1204	1214.5	34
				35
				36
				37
				38
				39
				40
				41
				42
				43
				44
				45
				46
				47
				48
85.22	2.68	98.25	42.51	49
Turbine Output	86.2	MWg		50
				51
				52
				53
				54
				55
				56
				57
				58
				59
				60
				61
				62
				63
				64
				65
70,780	55,923	96,703	34,999	66
				67
19.66	15.53	26.86	9.72	68
350	15	350	250	69
432	80	432	420	70

	BX	BY	BZ	CA	CB	CC	CD	CE	CF	CG	CH	CI
1	**Standardized IGCC Gasifier Cogen Application**								**Reference Coal -**			**Illinois #6**
2	**Mass & Energy Balance**				**GE 7191 F**				**Predicted Gasifier Output**			
3	Stream No.		25		26					27		27a
4	Identification		Regen Recycle Loop		Conc SO2 Bleed					Elemental Sulfur		Elemental Sulfur
5	From		Recycle Blower		Regen Loop					Resox Process		DSRP
6	To		Regenerator		SRP					Marketable Byproduct		Marketable Byproduct
7	Gas	Mol Wt	lb/hr	wt %	lb/hr	lbs/mol	mols/hr	wt %	mol %	lb/hr	wt %	lb/hr
8												
9	CO	28.010			0	0.00	0.00	0.00	0.00			
10	H2	2.016			0	0.00	0.00	0.00	0.00			
11	CO2	44.010	236	0.05	20	0.02	0.45	0.05	0.04			
12	H2O	18.015	2,943	0.62	245	0.20	13.61	0.62	1.11			
13	CH4	16.042			0	0.00	0.00	0.00	0.00			
14	C2H6	30.068			0	0.00	0.00	0.00	0.00			
15	H2S	34.076			0	0.00	0.00	0.00	0.00			
16	COS	60.070			0	0.00	0.00	0.00	0.00			
17	N2	28.013	356,030	74.87	29,669	24.10	1059.12	74.87	86.02			
18	Ar	39.948	0	0.00	0	0.00	0.00	0.00	0.00			
19	HCl	36.461			0	0.00	0.00	0.00	0.00			
20	HCN	27.026			0	0.00	0.00	0.00	0.00			
21	NH3	17.030			0	0.00	0.00	0.00	0.00			
22	CS2	76.131			0	0.00	0.00	0.00	0.00			
23	SO2	64.059	111,154	23.37	9,263	7.52	144.60	23.37	11.74			
24	NO	30.006			0	0.00	0.00	0.00	0.00			
25	O2	31.999	5,164	1.09	430	0.35	13.45	1.09	1.09			
26	NaCl	58.497			0	0.00	0.00	0.00	0.00			
27	KCl	74.596			0	0.00	0.00	0.00	0.00			
28	Total Gas (lb/hr)		475,527	100.00	39,627	32.19	1231	100.00	100.00			
29												
30	Volumetric Flow Rates		(STP 14.7 psia, 59F)									
31	(acfm)		16,715		1,318							
32	(scfm)		93,283		7,774							
33												
34	Heat (BTU/lb)											
35	Cp (BTU/lb F)		0.240		0.240					0.000		0.00
36	HHV (BTU/lb)											
37	LHV (BTU/lb)											
38	Sensible Heat above											
39	59 F Btu/lb steam											
40	Latent Heat of											
41	Water Btu/lb steam											
42												
43	Chemical Heat									18.43		18.
44	(LHV) MBtu/hr											
45	Sensible Heat		153.04		11.80					0.00		0.
46	above 59 F MBtu/hr											
47	Latent Heat		3.06		0.26					0.00		0.
48	of Water MBtu/hr											
49	TotalHeat(MBtu/hr)		156.10		12.06					18.43		18.
50												
51												
52	C	12.011										
53	H	1.008										
54	O	16.000										
55	N	14.007										
56	S	32.060								4,631		4,6
57	CL2	35.500										
58	H2O	18.016										
59	ZnFe2O4											
60	ZnS											
61	FeS											
62	Fe2O3											
63	ZnO											
64	ASH				0.00				0			
65	Total Solids											
66	Total Flow (pph)		475,527		39,627					4,631		4,6
67												
68	Total Flow (pps)		132.09		11.01					1.29		1.
69	Pressure (psia)		294		294					15		
70	Temperature (F)		1400		1300					284		1

CI	CJ	CK	CL	CM
6	J-1538	DE-AC21-89MC26291		1
	Revision 7		10/16/90	2
7a	27b	28		3
al Sulfur	Sulfur Dioxide	Ash		4
RP	SO2 Recovery Unit	SO2 Reductor		5
Byproduct	Marketable Byproduct	Disposal		6
/hr	lb/hr	lb/hr	wt%	7
				8
				9
				10
				11
				12
				13
				14
				15
				16
				17
				18
				19
				20
				21
				22
				23
				24
				25
				26
				27
				28
				29
				30
				31
				32
				33
				34
0.000	0.000			35
				36
				37
				38
		154	0	39
				40
				41
				42
18.43	18.43	6.66	0	43
				44
0.00	0.00	0.00	0	45
				46
0.00	0.00	0.00	0	47
				48
18.43	18.43	6.66	0.4	49
				50
				51
		459	3	52
				53
				54
				55
4,631	4,631			56
				57
				58
				59
				60
				61
				62
				63
		16,250	97	64
		16,709	100	65
4,631	9,263	16,709	100	66
				67
1.29	2.57	4.64		68
15	100	15		69
190	39	284		70

50 MW Utility Cycle
General Electric
LM 5000 PC

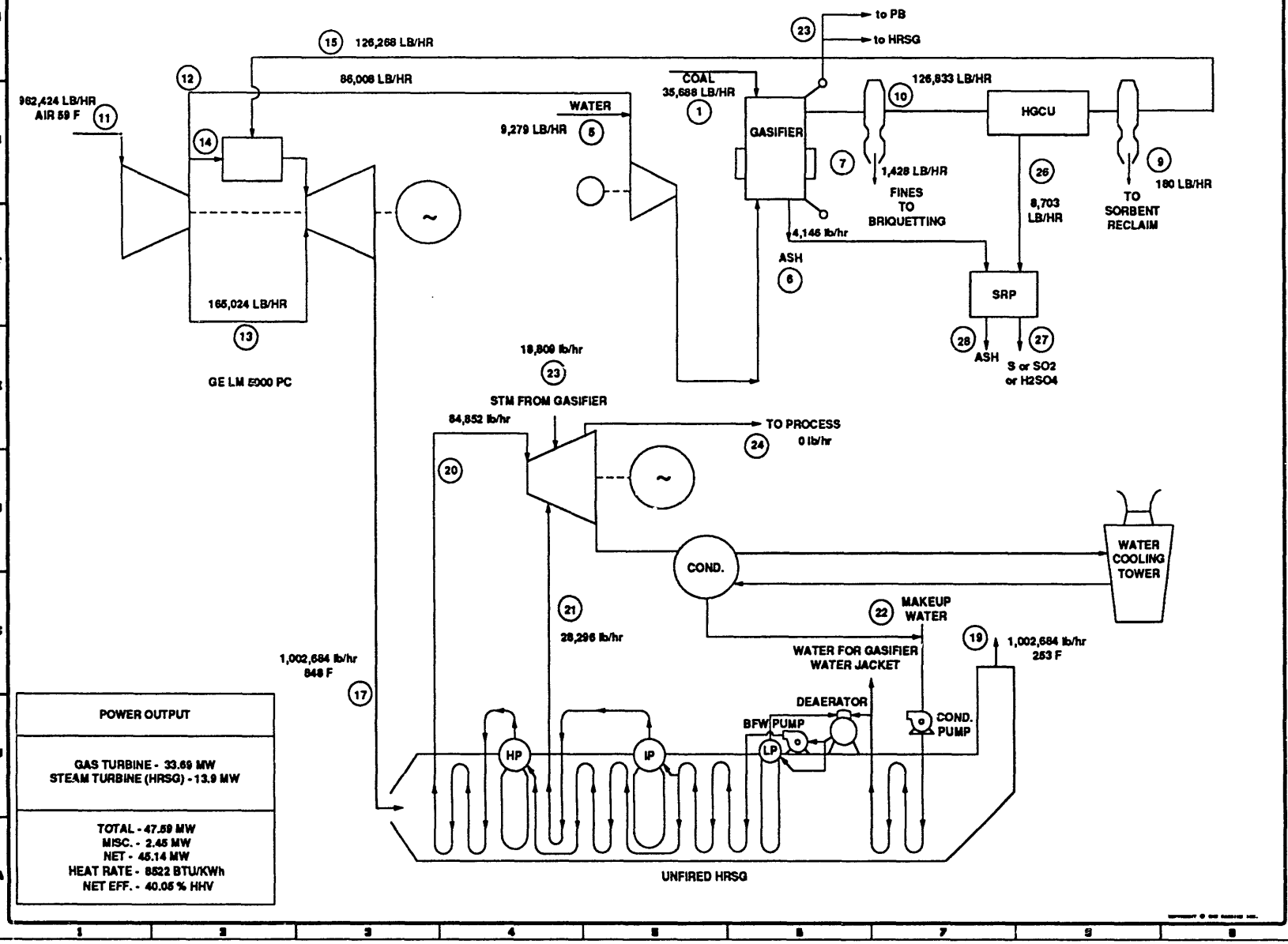
to PB
to HRSG
126,268 LB/HR
86,008 LB/HR
COAL
35,688 LB/HR
126,833 LB/HR
962,424 LB/HR
AIR 59 F
WATER
9,279 LB/HR
GASIFIER
HGCU
1,428 LB/HR
FINES
TO
BRIQUETTING
8,703
LB/HR
180 LB/HR
TO
SORBENT
RECLAIM
4,146 lb/hr
ASH
SRP
ASH
S or SO2
or H2SO4
165,024 LB/HR
GE LM 5000 PC
18,809 lb/hr
STM FROM GASIFIER
84,852 lb/hr
TO PROCESS
0 lb/hr
COND.
WATER
COOLING
TOWER
MAKEUP
WATER
28,296 lb/hr
1,002,684 lb/hr
253 F
WATER FOR GASIFIER
WATER JACKET
1,002,684 lb/hr
848 F
DEAERATOR
BFW PUMP
COND.
PUMP
HP
IP
LP
UNFIRED HRSG
POWER OUTPUT
GAS TURBINE - 33.69 MW
STEAM TURBINE (HRSG) - 13.9 MW
TOTAL - 47.59 MW
MISC. - 2.45 MW
NET - 45.14 MW
HEAT RATE - 8522 BTU/KWh
NET EFF. - 40.05 % HHV
CRSS
Power Division
Greenville, S.C.
CRS SIRINE
IGCC
PROJECT
J-1538
50 MW
UTILITY
SCHEMATIC

IGCC 62 - 50 MW UTILITY CYCLE
GENERAL ELECTRIC LM 5000 PC

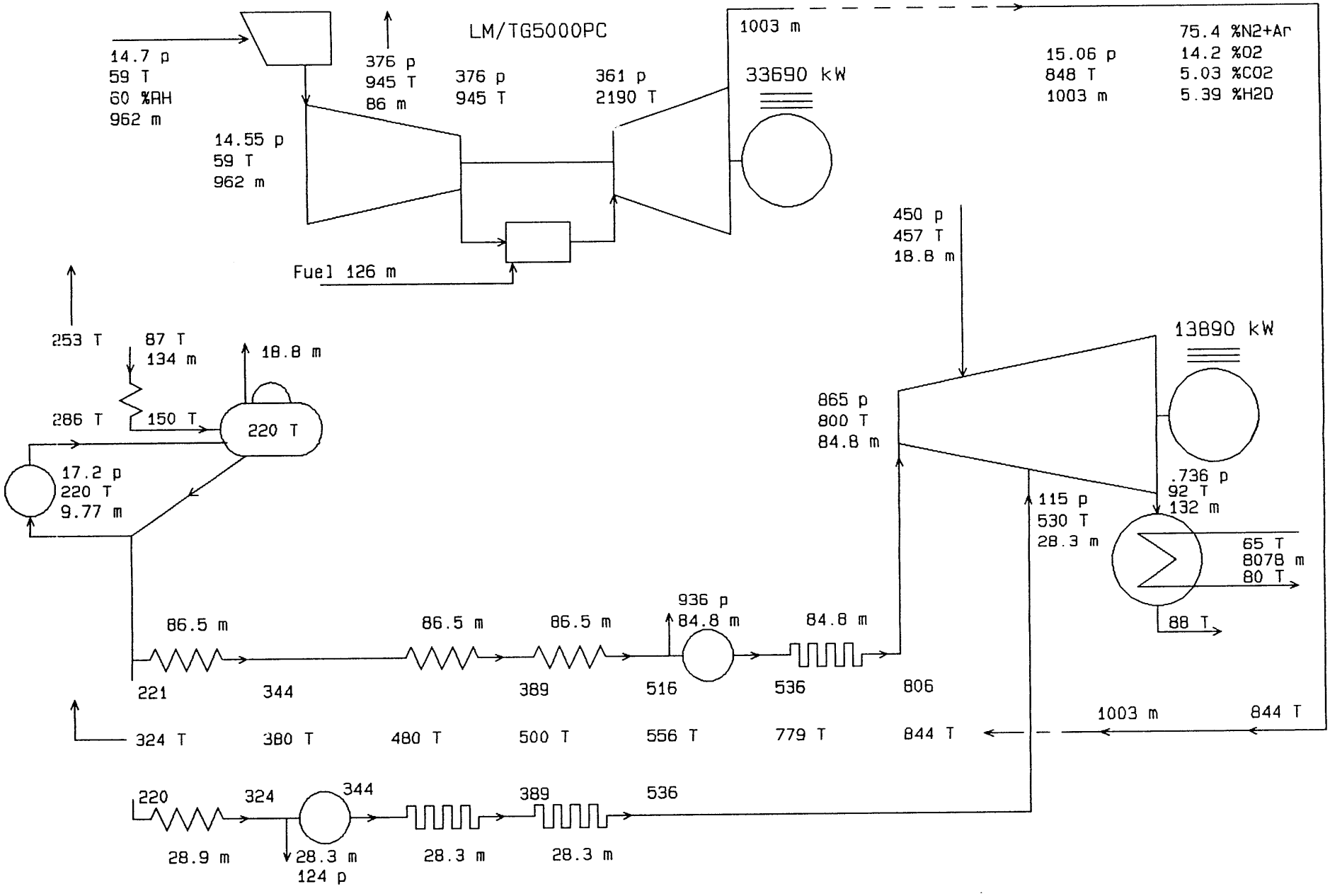

GTPRO 3.31 Michael Brown 10-15-1990 11:15:58
p psia, T F, m kpph

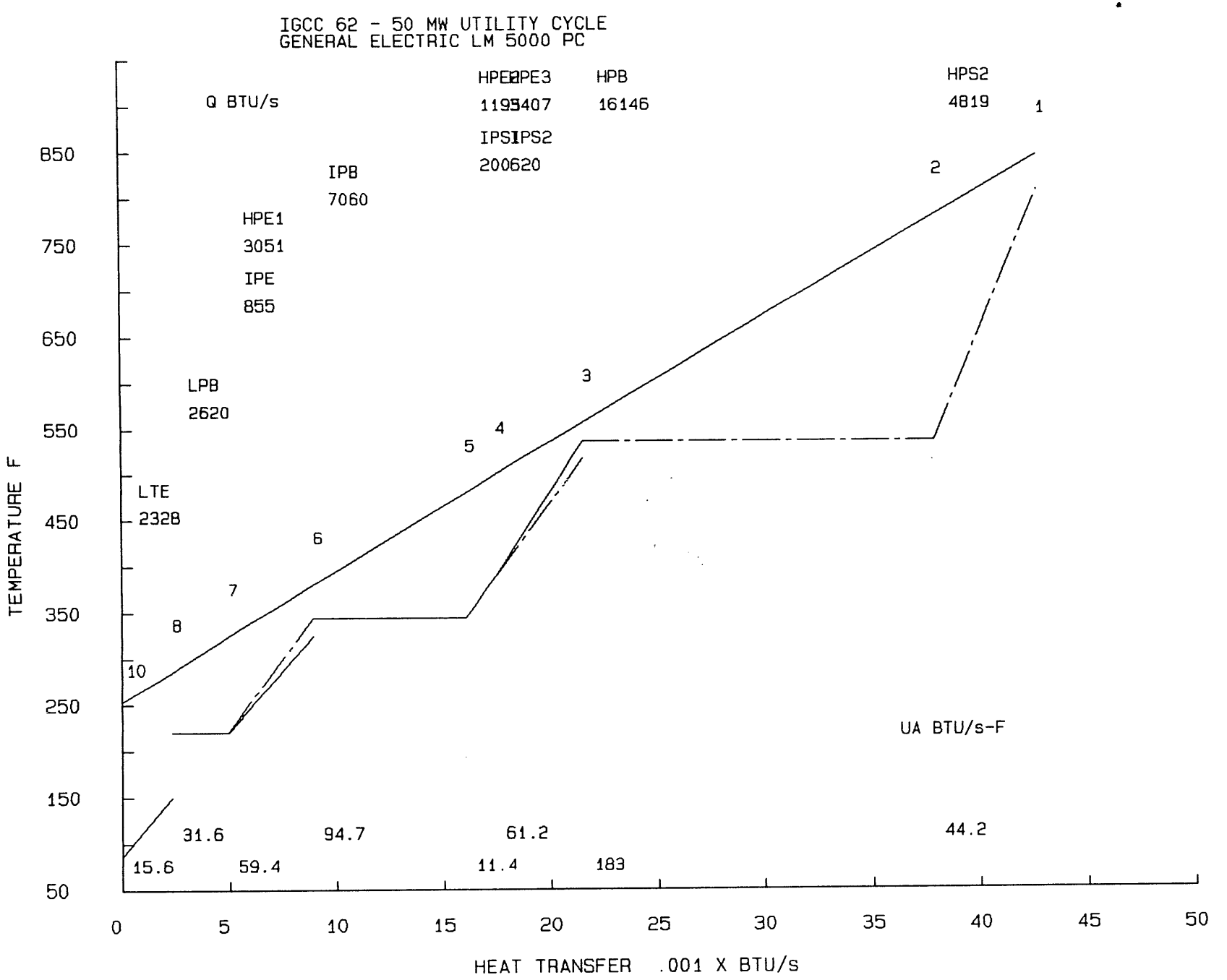

GTPRO 3.31 Michael Brown 10-15-1990 11:15:58

GTPRO 3.31 Michael Brown 10-15-1990 11:15:27
IGCC 62 - 50 MW UTILITY CYCLE
GENERAL ELECTRIC LM 5000 PC

ESTIMATED G.T. SITE PERFORMANCE

Fuel=Fuel G.T. @ 100 % rating, XIGV= 0
Site ambient conditions: 14.7 psia, 59 F, 60 % RH
Inlet loss= 4 inch H2O, exhaust loss= 10 inch H2O
Evap. inlet cooler to 0 % RH.

G.T. DEVIATION FROM NOMINAL, CLEAN ENGINE

Compressor inlet airflow % reduction = 0
Compressor efficiency reduction % = 0
Turbine efficiency reduction % = 0
Maximum firing temperature excess over base load = 0 F
Combustor % pressure loss (0 means nominal value) = 0
Combustor inefficiency + heat loss % (0 means nominal value) = 0
Cooling air increase % (0 means nominal value) = 0
Process air bleed location (0 means none) = 1
Process air bleed % of inlet = 8.94

#	Model	PR	TIT F	TET F	Mair kpph	kWe	H.R.LHV BTU/kWh	Mex kpph	N2+Ar %	O2 %	CO2 %	H2O %
1	M/TG5000PC	25.8	2190	848	962	33690	10133	1003	75.38	14.20	5.03	5.39

Fuel flow = 126 kpph
Fuel pressure reqd.= 507 psia, compressor power= 1720 kWe
G.T. auxillary power = 169 kWe.

ESTIMATED G.T. CYCLE

STREAM	TEMP. F	PRESS. psia	MASSFLOW kpph	M.W.	MOLE COMPOSITION % N2+Ar	O2	CO2	H2O
Ambient air in	59	14.70	962.44	28.75	78.22	20.74	0.03	1.01
Compr. inlet	59	14.55	962.44	28.75	78.22	20.74	0.03	1.01
Turbine coolant	misc.		165.02					
Process air bld	945	375.62	86.04	28.75	78.22	20.74	0.03	1.01
Compr. disch.	945	375.62	711.37	28.75	78.22	20.74	0.03	1.01
Turbine inlet	2190	360.59	837.64	28.87	74.82	12.91	6.01	6.26
Turbine exhaust	848	15.06	1002.67	28.85	75.38	14.20	5.03	5.39

Compressor= 61599 Turbine= 96324 Mech. loss= 347 kW
Turbine coolant= 17.1 % compr in
GT specific power @ gen term= 35 kW per kpph
GT efficiency @ gen term= 30.99 % HHV = 33.68 % LHV

GAS TURBINE/GENERATOR HEAT BALANCE

Energy in = 106601 BTU/s

Inlet air Sensible	Inlet air Latent	Water Inj.	Steam Inj.	Fuel HHV
1760	1780	0	0	103061

Energy out = 107151 BTU/s

Incompl comb & carcass rad	GT Mech. Losses	Gearbox Loss	Generator Loss	Exhaust Sensible	Exhaust Latent	Electric Output	Proc Air
522	221	0	658	58313	9853	31934	5651

Zero enthalpy: dry gases & liquid water @ 32 F (273.15 K)
Heat Balance Error = In - Out =-550 BTU/s =-.516 %

GTPRO 3.31 Michael Brown 10-15-1990 11:15:33 Steam cycle p.1
IGCC 62 - 50 MW UTILITY CYCLE
GENERAL ELECTRIC LM 5000 PC
Type: 6 Subtype: 2 Induction

	p psia	T F	h BTU/lb	m kpph	UA BTU/s-F	Q BTU/s	A sq.ft
Cnd rtrn	0.74	87.57	55.58	131.976			
Makeup	17.89	80.00	48.02	2.263			
FW supl	17.89	87.44	55.45	134.239			
LTE				134.239	16	2328	6908
from LTE	17.20	150.00	117.88	134.239			
LPB				9.768	32	2620	12875
water bleed				18.810			
htd. FW	17.20	220.00	188.13	115.429			
HPFW	1011.93	220.80	191.91	86.532			
HPE1				86.532	48	3051	20686
6	973.01	343.99	318.85	0.000			
HPE2				86.532	10	1195	4081
7	954.30	388.76	368.55	0.000			
HPE3				86.532	49	3407	20387
8	935.58	516.40	510.29	0.000			
Blwdn	935.58	536.40	532.50	1.697			
HPB				84.836	183	16146	69433
9	935.58	536.40	1194.99	0.000			
HPS1				84.836	0	0	0
10	935.58	536.40	1194.99	0.000			
HPS2				84.836	44	4819	21337
11	899.60	806.00	1399.50	0.000			
Into HPT	865.00	800.00	1397.61	84.836			
bef addn	450.00	657.33	1338.96	84.836			
HPT addn	450.00	457.00	1205.71	18.810			
aft addn	450.00	613.81	1314.78	103.646			
HPT exit	115.00	376.10	1211.52	103.646			
IPFW	129.36	220.09	188.56	28.897			
IPE				28.897	11	855	4774
1	124.38	323.99	295.11	0.000			
Blwdn	124.38	343.99	315.62	0.567			
IPB				28.330	95	7060	37439
2	124.38	343.99	1191.86	0.000			
IPS1				28.330	2	200	833
3	124.38	388.76	1217.31	0.000			
IPS2				28.330	12	620	5912
4	119.60	536.40	1296.04	0.000			
Into LPT	115.00	406.54	1229.02	131.976			
LPT exit	0.74	91.57	973.71	131.976			

STEAM TURBINE

	No. of steps	Exit Quality	Efficiency(%)	Work (kW)
To HPT additn	2	1.174		
To HPT exit	4	1.024	79.33	4594
To LPT exit	13	0.877	77.47	9874

Gross power = 14469 kW. Mech/Elect losses = 579 kW.
Generator output = 13890 kWe. ST auxiliaries = 97.2 kWe
Boiler feedpumps = 111 kWe

CONDENSER

	p psia	T F	h BTU/lb	m kpph
LPT exit	0.7365	91.57	973.71	131.98
Saturation	0.7365	91.57		
Condensate well	0.7365	87.57	55.58	131.98
Cooling water in		65.00		8078.11
Cooling water out		80.00		8078.11

Number of passes= 1 UA= 1868 BTU/s-F Surface area = 9138 sq.ft
Tubes: OD = 1 in Length= 38.6 ft number= 905
Cooling water: Velocity= 9 ft/s DP = 9.02 psia Pumps = 91.1 kWe.

STEAM CYCLE HEAT BALANCE

Energy in = 74590 BTU/s

GT Exhaust Sensible	GT Exhaust Latent	Duct Burner Fuel HHV	Makeup+Proc Return	Pump Work	External Steam
58313	9853	0	30	94	6300

Energy out = 74590 BTU/s

Heat Radiated	Blow down	Mech/Elec Losses	Stack Sens.	Stack Latent	Condnsr C.W.	Process Steam	GT Injec.	Proc. Water	Electric Output
792	301	549	15289	9853	33659	0	0	983	13166

Zero enthalpy: dry gases & liquid water @ 32 F (273.15 K)
Heat Balance Error = In - Out =-.297 BTU/s = 0 %

HRSG GAS-SIDE PROFILE

S	Tg F	Tw F HP/IP	DT F HP/IP	Qg/UA F	DELTA P inch H2O	UA BTU/s-F	Qg BTU/s	Vg ft/s	Tube Rows	Lngth ft
1	843.8	806.0	37.8							
				110.0	1.2	44.2	4867.6	57.4	4.6	1.9
	778.7	536.4	242.3							
2	778.7	536.4	242.3							
				89.1	3.5	183.0	16307.2	50.9	14.8	6.2
	556.4	536.4	20.0							
3	556.4	516.4	40.0							
3	556.4	536.4	20.0							
				66.5	1.1	61.2	4066.7	44.6	5.6	2.3
	499.9	388.8	111.2							
	499.9	388.8	111.2							
4	499.9	388.8	111.2							
4	499.9	388.8	111.2							
				123.3	0.2	11.4	1408.9	42.9	1.0	0.4
	480.3	344.0	136.3							
	480.3	344.0	136.3							
5	480.3	344.0	136.3							
				75.3	1.4	94.7	7130.7	40.2	8.0	3.3
	380.0	344.0	36.0							
6	380.0	344.0	36.0							
6	380.0	324.0	56.0							
				66.4	0.9	59.4	3945.5	36.6	5.4	2.3
	324.0	220.8	103.2							
	324.0	220.1	103.9							
7	324.0	220.0	104.0							
				83.7	0.4	31.6	2645.7	34.5	2.7	1.1
	286.3	220.0	66.3							
8	286.3	150.0	136.3							
				150.3	0.2	15.6	2351.4	32.9	1.5	0.6
	252.7	87.4	165.2							

Duct burner fuel= 0 kpph
Gas mole composition: 75.4 %N2+Ar 14.2 %O2 5.03 %CO2 5.39 %H2O .002 %SO2
Flue gas dew point = 94 F M.W.= 28.8

HRSG TOTALS	Economisers	Evaporators	Superheaters	TOTAL
Q BTU/s	10836	25825	5639	42301
UA BTU/s-F	134	309	58	501
sq.ft	56836	119747	28082	204665

Prime surface= 11905 fin surface= 192759 sq.ft. Averaged fin eff.= .72
HRSG frontal area = 310 sq.ft. Gas mass flux= 6.42 kpph/sq.ft
HRSG length = 18.2 ft, 43.7 tube rows, 744 ft of tubes per row.
2 in dia. tubes with serrated fins, staggered arrangement.
Fin thickness/dia.= .03 , height/dia.= .4 , spacing/dia.= .07
Tube transverse pitch/dia.= 2.5 , row longitudinal pitch/dia.= 2.5

GE LM 5000 PC

Water cooling

air to coal ratio	2.41	air pressure	375	Cp air	0.248
water coal ratio	0.251	air temperature	945	Cp water	1.000
air to water ratio	9.60	water temperature	80	Cp steam	0.455

	lb	wt %	mols	mol %	partial pressure
air	9.60	90.57%	0.33	85.74%	321.53
water	1.00	9.43%	0.06	14.26%	53.47

sat temp 285

Temperature of combined stream entering boost compressor

400.15 F sat pressure 247 psia Rel. Hum. 21.65%

Temperature of stream exiting compressor (85% comp eff)

Tf = Ti + (Ti/n*{(Pf/Pi)^((k-1)/k)-1})

where
Ti - inlet temperature - 400.15 F - 860.15 R
n - efficiency - 85.00%
k - ratio of specific heat @ constant pressure to specific
to specific heat @ constant volume 1.384
Pf - final pressure 450 psia
Pi - initial pressure 375 psia

Tf = 452.66 F

	A	B	C	D	E	F	G	H	I	J	K	L	M	N	O
1	Standardized IGCC Gasifier Utility Application													Reference Coal -	
2	Mass & Energy Balance					GE LM 5000 PC		Plant		Full Load				Predicted Gasifier Out	
3	Stream No.			1		2		3		4				5	
4	Identification			AR Coal		Coal Fines		Sized Coal		CompAir@	2.41 A/C			Water @	0.26
5	From			Illinois #6		Sizer @	30%	Combined Streams		Aux Compr &/or Booster Compr				Cooling Water	H2O/
6	To			Sizer		Briquetting		Gasifier		Gasifier				Gasifier	Coal
7	Gas	Mol Wt		lb/hr	wt %	lb/hr	wt %	lb/hr	wt %	lb/hr	lb/mol	wt %	mol%	lb/hr	
8															
9	CO	28.010								0	0.00	0.00	0.00		
10	H2	2.016								0	0.00	0.00	0.00		
11	CO2	44.010								41	0.01	0.05	0.03		
12	H2O	18.015								547	0.18	0.64	1.02	9,279	
13	CH4	16.042								0	0.00	0.00	0.00		
14	C2H6	30.068								0	0.00	0.00	0.00		
15	H2S	34.076								0	0.00	0.00	0.00		
16	COS	60.070								0	0.00	0.00	0.00		
17	N2	28.013								64,528	21.65	75.03	77.28		
18	Ar	39.948								1,130	0.38	1.31	0.95		
19	HCl	36.461								0	0.00	0.00	0.00		
20	HCN	27.026								0	0.00	0.00	0.00		
21	NH3	17.030								0	0.00	0.00	0.00		
22	CS2	76.131								0	0.00	0.00	0.00		
23	SO2	64.059								0	0.00	0.00	0.00		
24	NO	30.006								0	0.00	0.00	0.00		
25	O2	31.999								19,763	6.63	22.98	20.72		
26	NaCl	58.497								0	0.00	0.00	0.00		
27	KCl	74.596								0	0.00	0.00	0.00		
28	Total Gas (lb/hr)									86,008	28.86	100.00	100.00	9,279	
29															
30	Volumetric Flow Rates (STP 14.7 psia, 59F)														
31	(acfm)									1,081					
32	(scfm)									18,819					
33															
34	Heat (BTU/lb)													1257	
35	Cp (BTU/lb F)									0.246					
36	HHV (BTU/lb)			10,776		10,776		10,776		0					
37	LHV (BTU/lb)			10,239		10,239		10,260		0					
38	Sensible Heat above														
39	59 F Btu/lb steam			0		0		0		97					
40	Latent Heat of														
41	Water Btu/lb steam									7					
42															
43	Chemical Heat			365.41		109.62		380.83		0.00					
44	(LHV) MBtu/hr														
45	Sensible Heat			0.00		0.00		0.00		8.34					
46	above 59 F MBtu/hr														
47	Latent Heat			19.16		5.75		19.16		0.57					
48	of Water MBtu/hr														
49	TotalHeat(MBtu/hr)			384.57		115.37		400.00		8.91				11.66	
50				Number of Gasifiers for 85% Plant Availability @90% Gasifier Availability,										450	psia &
51															
52	C	12.011		21,452	60.11%	6,436	60.11%	22,560	60.78%		11				
53	H	1.008		1,488	4.17%	446	4.17%	1,488	4.01%		61			1,031	
54	O	16.000		2,702	7.57%	810	7.57%	2,702	7.28%		20,279			8,248	
55	N	14.007		421	1.18%	126	1.18%	421	1.13%		64,528			9,279	Total
56	S	32.060		1,028	2.88%	308	2.88%	1,028	2.77%		84,878	Total			
57	CL2	35.500		0	0.00%	0	0.00%	0	0.00%		-				
58	H2O	18.016		5,032	14.10%	1,510	14.10%	5,032	13.56%						
59	ZnFe2O4														
60	ZnS														
61	FeS														
62	Fe2O3														
63	ZnO														
64	ASH			3,569	10.00%	1,071	10.00%	3,889	10.48%						
65	Total Solids			35,688	100.01%	10,706	100.01%	37,119	100.00%						
66	Total Flow (pph)			35,688 *		10,706		37,119		86,008				9,279	
67															
68	Total Flow (pps)			9.91		2.97		10.31		23.89				2.58	
69	Pressure (psia)			14.7		14.7		14.7		450 *				450 *	
70	Temperature (F)			59		59		59		453 *				453 *	

al - Illinois #6 J-1538 DE-AC21-89MC26291

ifier Output 10/16/90 Revision 7

	O	P	Q	R	S	T	U	V	W	X	Y	Z	AA	AB	AC	AD
																1
																2
		6	Uncomb	7		8		9				10	55 scf/lb of coal			3
P	0.26	Ash	Carbon	Fines (Char)		Tar		Dust(per RTI dia)		Miscellaneous		Hot Gas with tars				4
ater	H2O/	Gasifier	2.69%	Gasifier @	4.00%	Gasifier @	6.00%	Final Cyclone		Gasifier Heat		Gasifier	N2 in coal			5
r	Coal	Ash Silo		Briquetting		HGCU		Reclaim		Losses		HGCU	to NH3 Conv		90.1%	6
		lb/hr	wt %	lb/hr	wt %	lb/hr	wt %	lb/hr	wt %			lb/hr	lb/mol	wt %	mol %	7
																8
												33,306	6.39	26.26	22.82	9
												1,498	0.29	1.18	14.26	10
												14,905	2.86	11.75	6.50	11
9,279												6,476	1.24	5.11	6.90	12
												2,721	0.52	2.15	3.26	13
												540	0.10	0.43	0.34	14
												936	0.18	0.74	0.53	15
												275	0.05	0.22	0.09	16
												64,569	12.39	50.91	44.24	17
												1,130	0.22	0.89	0.54	18
												0	0.00	0.00	0.00	19
												44	0.01	0.03	0.03	20
												433	0.08	0.34	0.49	21
												0	0.00	0.00	0.00	22
												0	0.00	0.00	0.00	23
												0	0.00	0.00	0.00	24
												0	0.00	0.00	0.00	25
												0	0.00	0.00	0.00	26
												0	0.00	0.00	0.00	27
9,279												126,833	24.34	100.00	100.00	28
																29
												126,833				30
												3,268				31
												32,911				32
																33
1257																34
		0.260		0.260		0.26		0.260				0.329				35
		0		10,936		17,329		0				2,588.8				36
		0		10,936		16,571		0				2,375.0				37
																38
		154		276		276		323				349				39
																40
		0		0		749		0				214				41
																42
		8.37		15.61		35.48		0.00				301.22				43
																44
		0.64		0.39		0.59		0.06		19.1 Water/steam jacket		44.22				45
																46
		0.00		0.00		1.60		0.00		4.5 Traversing Stirrer		27.13	Gas HHV=	189	Btu/scf	47
													Estimated=	598	Btu/lb	48
11.66		9.00		16.01		37.68		0.06		23.6 Total		372.58	Calculated=	605	Btu/lb	49
psia & 17 tph (typical) Coal each:					1.5		Unit Output (MWn)			45.1 MWn			BulkGas=	3.91%	H2O	50
													Calc Comb Temp (F)		2220	51
		577	13.92	1,108	77.60%	1,884	88.00%					20,886	20,886	0.00%		52
1,031				0	0.00%	171	8.00%					3,139	3,139	0.00%		53
8,248				0	0.00%	43	2.00%					35,701	35,701	0.00%		54
9,279 Total				0	0.00%	21	1.00%					64,949	64,949	0.00%		55
		0	0.00	0	0.00%	21	1.00%					1,028	1,028	-0.02%		56
				0	0.00%						Sub-Totals	125,703	125,703	0.00%		57
				0	0.00%							Sum of	Sum of Gas	Mass		58
								162	90			Streams	Constituents	Unbalance		59
								4	2				balance check			60
								11	6			Cycle Efficiency(g) = 42.23%				61
								0	0			Cycle Efficiency (n) = 40.05%				62
								4	2							63
		3,569	86.08	320	22.40%			0	0							64
		4,146	100	1,428	100.00%	2,141	100.00%	180	100							65
9,279		4,146		1,428		2,141		180				126,833				66
																67
2.58		1.15		0.40		0.59		0.05				35.23				68
450 *		14.7		450 *		450 *		451				451				69
453 *		650		1120		1120		1300				1120				70

	AE	AF	AG	AH	AI	AJ	AK	AL	AM	AN	AO	AP	AQ	AR
1	**Standardized IGCC Gasifier Utility Application**											**Reference Coal - Il**		
2	**Mass & Energy Balance**				**GE LM 5000 PC**							**Predicted Gasifier Out**		
3	Stream No.			11				12			13		14	
4	Identification			Air				Bleed Air			Bleed Air		Compressor Discharge	
5	From			Atmosphere				Compressor			for		Compressor	
6	To			Gas Turbine Compressor				Booster Compressor Cooler			Coolant		Combustor	
7	Gas	Mol Wt	lb/hr	lb/mol	wt %	mol %	lb/hr	lb/mol	wt %	mol %	lb/hr	lb/hr	lb/mol	wt %
8														
9	CO	28.010	0	0.00	0.00	0.00	0	0.00	0.00	0.00	0	0	0.00	0.00
10	H2	2.016	0	0.00	0.00	0.00	0	0.00	0.00	0.00	0	0	0.00	0.00
11	CO2	44.010	456	0.01	0.05	0.03	41	0.01	0.05	0.03	78	337	0.01	0.05
12	H2O	18.015	6,119	0.18	0.64	1.02	547	0.18	0.64	1.02	1,049	4,523	0.18	0.64
13	CH4	16.042	0	0.00	0.00	0.00	0	0.00	0.00	0.00	0	0	0.00	0.00
14	C2H6	30.068	0	0.00	0.00	0.00	0	0.00	0.00	0.00	0	0	0.00	0.00
15	H2S	34.076	0	0.00	0.00	0.00	0	0.00	0.00	0.00	0	0	0.00	0.00
16	COS	60.070	0	0.00	0.00	0.00	0	0.00	0.00	0.00	0	0	0.00	0.00
17	N2	28.013	722,063	21.65	75.03	77.28	64,528	21.65	75.03	77.28	123,810	533,725	21.65	75.03
18	Ar	39.948	12,641	0.38	1.31	0.95	1,130	0.38	1.31	0.95	2,168	9,344	0.38	1.31
19	HCl	36.461	0	0.00	0.00	0.00	0	0.00	0.00	0.00	0	0	0.00	0.00
20	HCN	27.026	0	0.00	0.00	0.00	0	0.00	0.00	0.00	0	0	0.00	0.00
21	NH3	17.030	0	0.00	0.00	0.00	0	0.00	0.00	0.00	0	0	0.00	0.00
22	CS2	76.131	0	0.00	0.00	0.00	0	0.00	0.00	0.00	0	0	0.00	0.00
23	SO2	64.059	0	0.00	0.00	0.00	0	0.00	0.00	0.00	0	0	0.00	0.00
24	NO	30.006	0	0.00	0.00	0.00	0	0.00	0.00	0.00	0	0	0.00	0.00
25	O2	31.999	221,145	6.63	22.98	20.72	19,763	6.63	22.98	20.72	37,919	163,463	6.63	22.98
26	NaCl	58.497	0	0.00	0.00	0.00	0	0.00	0.00	0.00	0	0	0.00	0.00
27	KCl	74.596	0	0.00	0.00	0.00	0	0.00	0.00	0.00	0	0	0.00	0.00
28	Total Gas (lb/hr)		962,424	28.86	100.00	100.00	86,008	28.86	100.00	100.00	165,024	711,392	28.86	100.00
29														
30	Volumetric Flow Rates (STP 14.7 psia, 59F)													
31	(acfm)		210,583				1,994					16,491		
32	(scfm)		210,583				18,819				36,367	155,656		
33														
34	hgAdiabHeat(BTU/lb)													
35	Cp (BTU/lb F)		0.240				0.262					0.262		
36	HHV (BTU/lb)		0.0				0.0					0.0		
37	LHV (BTU/lb)		0.0				0.0					0.0		
38	Sensible Heat													
39	above 59 F Btu/lb		0				232					232		
40	Latent Heat													
41	of Water Btu/lb		7				7					7		
42														
43	Chemical Heat		0.00				0.00					0.00		
44	(LHV) MBtu/hr													
45	Sensible Heat		0.00				19.98					165.24		
46	above 59 F MBtu/hr													
47	Latent Heat		6.36				0.57					4.70		
48	of Water MBtu/hr													
49	TotalHeat(MBtu/hr)		6.36				20.55					169.95		
50												Parasitic Load		2.45 M
51														
52	C	12.011		124				11			21		92	92
53	H	1.008		680				61			117		503	503
54	O	16.000		226,915				20,279			38,909		167,728	167,728
55	N	14.007		722,063				64,528			123,810		533,725	533,725
56	S	32.060		0				0			0		0	0
57	CL2	35.500		949,783	sub-totals			84,878	sub-totals		162,856	sub-totals	702,048	702,048
58	H2O	18.016												balance check
59	ZnFe2O4													
60	ZnS													
61	FeS													
62	Fe2O3													
63	ZnO													
64	ASH													
65	Total Solids													
66	Total Flow (pph)		962,424				86,008				165,024	711,392		
67														
68	Total Flow (pps)		267.34 *				23.89			*	45.84	197.61		
69	Pressure (psia)		14.7 *				376 *					376		
70	Temperature (F)		59 *				945 *					945		

AS	AT	AU	AV	AW	AX	AY	AZ	BA	BB	BC	BD	BE	BF	BG
Illinois #6							J-1538			DE-AC21-89MC26291				1
Output				Revision 7									10/16/90	2
harge	15				16					17				3
	Fuel			%H2S	Inlet Gas		Thrml NO (ppmvd)		25	Exhaust Gas				4
	HGCU			Removed	GT Combustor		*Rich/Lean Red. F		85%	Gas Turbine				5
	GT Combustor			99.0%	GT Expander									6
mol %	lb/hr	mol/hr	wt %	mol %	lb/hr	lb/mol	mols/lb of fuel	wt %	mol%	lb/hr	mols/hr	wt %	mol%	7
														8
.00 0.00	33,306	1,189	26.38	22.84	0	0.00	0.00	0.00	0.00	0	0.00	0.00	0.00	9
.00 0.00	1,480	734	1.17	14.10	0	0.00	0.00	0.00	0.00	0	0.00	0.00	0.00	10
.05 0.03	14,905	339	11.80	6.51	76,719	2.65	0.0021	9.16	6.03	76,797	1744.99	7.66	5.04	11
.64 1.02	7,129	396	5.65	7.60	32,772	1.13	0.00	3.91	6.29	33,821	1877.37	3.37	5.42	12
.00 0.00	2,721	170	2.16	3.26	0	0.00	0.00	0.00	0.00	0	0.00	0.00	0.00	13
.00 0.00	540	18	0.43	0.34	0	0.00	0.00	0.00	0.00	0	0.00	0.00	0.00	14
.00 0.00	9	0	0.01	0.01	0	0.00	0.00	0.00	0.00	0	0.00	0.00	0.00	15
.00 0.00	3	0	0.00	0.00	0	0.00	0.00	0.00	0.00	0	0.00	0.00	0.00	16
.03 77.28	64,569	2,305	51.14	44.28	598,396	20.70	0.0255	71.46	73.90	722,406	25788.24	72.05	74.46	17
.31 0.95	1,130	28	0.89	0.54	10,474	0.36	0.00	1.25	0.91	12,641	316.44	1.26	0.91	18
.00 0.00	0	0	0.00	0.00	0	0.00	0.00	0.00	0.00	0	0.00	0.00	0.00	19
.00 0.00	44	2	0.03	0.03	0	0.00	0.00	0.00	0.00	0	0.00	0.00	0.00	20
.00 0.00	433	25	0.34	0.49	0	0.00	0.00	0.00	0.00	0	0.00	0.00	0.00	21
.00 0.00	0	0	0.00	0.00	0	0.00	0.00	0.00	0.00	0	0.00	0.00	0.00	22
.00 0.00	0	0	0.00	0.00	21	0.0007	0.0000	0.0025	0.0011	21	0.32	0.00	0.00	23
.00 0.00	0	0	0.00	0.00	168	0.0058	0.0000	0.0200	0.0193	168	5.59	0.02	0.02	24
.98 20.72	0	0	0.00	0.00	118,913	4.11	0.0044	14.20	12.85	156,832	4901.15	15.64	14.15	25
.00 0.00	0	0	0.00	0.00	0	0.00	0.00	0.00	0.00	0	0.00	0.00	0.00	26
.00 0.00	0	0	0.00	0.00	0	0.00	0.00	0.00	0.00	0	0.00	0.00	0.00	27
.00 100.00	126,268	5,206	100.00	100.00	837,660	28.97	0.0345	100.00	100.00	1,002,684	34634.09	100.00	100.00	28
					837,661 bal ck					1,002,685	bal ck			29
														30
	3,388				37,957					535,433				31
	32,867				182,560					218,669				32
														33
														34
	0.334				0.283					0.267				35
	2,548.9				0.0					0.0				36
	2,330.0				0.0					0				37
														38
	375				603					211				39
														40
	219				41					35				41
														42
	294.21				0.00					0.00				43
														44
	47.29				505.17					211.58				45
														46
	27.63				34.08					35.17				47
														48
	369.13				539.25	539.07 bal chk				246.76				49
2.45 MWg		Combustion Turbine Output			33.69 MWg					1.04 Turbine Compressor Surge Margin				50
														51
92 0.00%		20,831			20,923	20,923	0.00%			20,945	20,945	0.00%		52
503 0.00%		3,139			3,641	3,641	0.00%			3,758	3,758	0.00%		53
,728 0.00%		36,209			203,937	203,938	0.00%			242,847	242,847	0.00%		54
,725 0.00%		64,949			598,674	598,674	0.00%			722,484	722,484	0.00%		55
0 0.00%		10			10	10	0.10%			10	10	0.00%		56
,048 0.00%		125,138	sub-total		827,186	827,187	0.00%	sub-total		990,044	990,044	0.00%	sub-total	57
s check							balance check					balance check		58
														59
														60
														61
														62
														63
														64
														65
	126,268				837,660					1,002,684				66
														67
	35.07				232.68					278.52				68
	450.62				361 *					15.13				69
	1180				2,190 *					848 *				70

	BH	BI	BJ	BK	BL	BM	BN	BO	BP	BQ	BR	BS
1	Standardized IGCC Gasifier Utility Application						Reference Coal -			Illinois #6		
2	Mass & Energy Balance			GE LM 5000 PC			Predicted Gasifier Output					
3	Stream No.		18				19	Thrml NO (ppmvd)		25	20	21
4	Identification		Fuel for Supplementary Firing				Flue Gas		SCR Red F	80 %	Superheated Steam	Low Pressure Ste
5	From		Gasifier				HRSG		R/L Red F	85 %	HRSG	HRSG
6	To		HRSG				Stack		NOx Reburn F	0%	Steam Turbine	Steam Turbine
7	Gas	Mol Wt	lb/hr	lb/mol	wt %	mol %	lb/hr	mols/hr	wt %	mol %	lb/hr	lb/hr
8												
9	CO	28.010	0	6.39	26.26	22.82	0	0.00	0.00	0.00		
10	H2	2.016	0	0.29	1.18	14.26	0	0.00	0.00	0.00		
11	CO2	44.010	0	2.86	11.75	6.50	76,797	1744.99	7.66	5.04		
12	H2O	18.015	0	1.24	5.11	6.90	33,821	1877.37	3.37	5.42		
13	CH4	16.042	0	0.52	2.15	3.26	0	0.00	0.00	0.00		
14	C2H6	30.068	0	0.10	0.43	0.34	0	0.00	0.00	0.00		
15	H2S	34.076	0	0.18	0.74	0.53	0	0.00	0.00	0.00		
16	COS	60.070	0	0.05	0.22	0.09	0	0.00	0.00	0.00		
17	N2	28.013	0	12.39	50.91	44.24	722,406	25788.24	72.06	74.47		
18	Ar	39.948	0	0.22	0.89	0.54	12,641	316.44	1.26	0.91		
19	HCl	36.461	0	0.00	0.00	0.00	0	0.00	0.00	0.00		
20	HCN	27.026	0	0.01	0.03	0.03	0	0.00	0.00	0.00		
21	NH3	17.030	0	0.08	0.34	0.49	0	0.00	0.00	0.00		
22	CS2	76.131	0	0.00	0.00	0.00	0	0.00	0.00	0.00	Stack Emissions (lb/MBtu)	
23	SO2	64.059	0	0.00	0.00	0.00	21	0.32	0.00	0.00	0.053	
24	NO	30.006	0	0.00	0.00	0.00	34	1.12	0.00	0.00	0.09	
25	O2	31.999	0	0.00	0.00	0.00	156,832	4901.15	15.64	14.15		
26	NaCl	58.497	0	0.00	0.00	0.00	0	0.00	0.00	0.00		
27	KCl	74.596	0	0.00	0.00	0.00	0	0.00	0.00	0.00		
28	Total Gas (lb/hr)		0	24.34	100.00	100.00	1,002,530	34629.62	100.00	100.00		
29							1,002,551	bal chk				
30	Volumetric Flow Rates (STP 14.7 psia, 59F)											
31	(acfm)		0				300,367					
32	(scfm)		0				218,641					
33												
34	Heat (BTU/lb)										1398	1
35	Cp (BTU/lb F)		0.334				0.247					
36	HHV (BTU/lb)		2548.9				0.0					
37	LHV (BTU/lb)		2330.0				0					
38	Sensible Heat above											
39	59 F Btu/lb steam		0				48					
40	Latent Heat of											
41	Water Btu/lb steam		0				35					
42												
43	Chemical Heat		0.00				0.00					
44	(LHV) MBtu/hr											
45	Sensible Heat		0.00				48.02					
46	above 59 F MBtu/hr											
47	Latent Heat		0.00				35.17					
48	of Water MBtu/hr											
49	TotalHeat(MBtu/hr)		0.00				83.19				118.62	
50											HRSG Turbine Ou	
51												
52	C	12.011		0			20,945	20,945	0.00%			
53	H	1.008		0			3,758	3,758	0.00%			
54	O	16.000		0			242,775	242,775	0.00%			
55	N	14.007		0			722,422	722,422	0.00%			
56	S	32.060		0			10	10	0.00%			
57	CL2	35.500		0	sub-total		989,910	989,910	0.00%	sub-total		
58	H2O	18.016										
59	ZnFe2O4											
60	ZnS											
61	FeS											
62	Fe2O3											
63	ZnO											
64	ASH											
65	Total Solids											
66	Total Flow (pph)		0				1,002,684				84,852	2
67												
68	Total Flow (pps)		0 *				278.52				23.57	
69	Pressure (psia)		450.62				14.7				865	
70	Temperature (F)		1160				253 *				800	

BS	BT	BU	BV	BW
	J-1538	DE-AC21-89	MC26291	1
	Revision 7		10/16/90	2
21	22	23	24	3
Pressure Steam	Make Up Water	Sat. Steam	Process Stm	4
HRSG	WaterTreatment	Gasifier	Stm Turbine	5
eam Turbine	HRSG	Steam Turbine	Process Facility	6
lb/hr	lb/hr	lb/hr	lb/hr	7
				8
				9
				10
				11
				12
				13
				14
				15
				16
				17
				18
				19
				20
				21
				22
				23
				24
				25
				26
				27
				28
				29
				30
				31
				32
				33
1237.6	48	1204		34
				35
				36
				37
				38
				39
				40
				41
				42
				43
				44
				45
				46
				47
				48
35.02	0.55	19.11		49
G Turbine Output	13.9	MWg		50
				51
				52
				53
				54
				55
				56
				57
				58
				59
				60
				61
				62
				63
				64
				65
28,296	11,561	18,809	0	66
				67
7.86	3.21	5.22	0.00	68
115	15	450	250	69
432	80	457	420	70

	BX	BY	BZ	CA	CB	CC	CD	CE	CF	CG	CH	CI
1	Standardized IGCC Gasifier Utility Application								Reference Coal -			Illinois #6
2	Mass & Energy Balance				GE LM 5000 PC				Predicted Gasifier Output			
3	Stream No.		25		26					27		27a
4	Identification		Regen Recycle Loop		Conc SO2 Bleed					Elemental Sulfur		Elemental Sulfur
5	From		Recycle Blower		Regen Loop					Resox Process		DSRP
6	To		Regenerator		SRP					Marketable Byproduct		Marketable Byprodu
7	Gas	Mol Wt	lb/hr	wt%	lb/hr	lbs/mol	mols/hr	wt%	mol%	lb/hr	wt%	lb/hr
8												
9	CO	28.010			0	0.00	0.00	0.00	0.00			
10	H2	2.016			0	0.00	0.00	0.00	0.00			
11	CO2	44.010	44	0.05	4	0.02	0.08	0.05	0.04			
12	H2O	18.015	590	0.67	49	0.22	2.73	0.67	1.22			
13	CH4	16.042			0	0.00	0.00	0.00	0.00			
14	C2H6	30.068			0	0.00	0.00	0.00	0.00			
15	H2S	34.076			0	0.00	0.00	0.00	0.00			
16	COS	60.070			0	0.00	0.00	0.00	0.00			
17	N2	28.013	62,808	70.75	5,234	23.39	186.84	70.75	83.48			
18	Ar	39.948	0	0.00	0	0.00	0.00	0.00	0.00			
19	HCl	36.461			0	0.00	0.00	0.00	0.00			
20	HCN	27.026			0	0.00	0.00	0.00	0.00			
21	NH3	17.030			0	0.00	0.00	0.00	0.00			
22	CS2	76.131			0	0.00	0.00	0.00	0.00			
23	SO2	64.059	24,411	27.50	2,034	9.09	31.76	27.50	14.19			
24	NO	30.006			0	0.00	0.00	0.00	0.00			
25	O2	31.999	921	1.04	77	0.34	2.40	1.04	1.07			
26	NaCl	58.497			0	0.00	0.00	0.00	0.00			
27	KCl	74.596			0	0.00	0.00	0.00	0.00			
28	Total Gas (lb/hr)		88,774	100.00	7,398	33.05	224	100.00	100.00			
29												
30	Volumetric Flow Rates		(STP 14.7 psia, 59 F)									
31	(acfm)		3,038		240							
32	(scfm)		16,957		1,413							
33												
34	Heat (BTU/lb)											
35	Cp (BTU/lb F)		0.240		0.240					0.000		0.0
36	HHV (BTU/lb)											
37	LHV (BTU/lb)											
38	Sensible Heat above											
39	59 F Btu/lb steam											
40	Latent Heat of											
41	Water Btu/lb steam											
42												
43	Chemical Heat									4.05		4
44	(LHV) MBtu/hr											
45	Sensible Heat		28.57		2.20					0.00		0
46	above 59 F MBtu/hr											
47	Latent Heat		0.61		0.05					0.00		0
48	of Water MBtu/hr											
49	TotalHeat(MBtu/hr)		29.19		2.25					4.05		4
50												
51												
52	C	12.011										
53	H	1.008										
54	O	16.000										
55	N	14.007										
56	S	32.060								1,017		1,
57	CL2	35.500										
58	H2O	18.016										
59	ZnFe2O4											
60	ZnS											
61	FeS											
62	Fe2O3											
63	ZnO											
64	ASH				0.00			0				
65	Total Solids											
66	Total Flow (pph)		88,774		7,398					1,017		1,
67												
68	Total Flow (pps)		24.66		2.05					0.28		0
69	Pressure (psia)		294		294					15		
70	Temperature (F)		1400		1300					284		

CI	CJ	CK	CL	CM
#6	J-1538	DE-AC21-89MC26291		1
	Revision 7		10/16/90	2
27a	27b	28		3
ntal Sulfur	Sulfur Dioxide	Ash		4
DSRP	SO2 Recovery Unit	SO2 Reductor		5
ble Byproduct	Marketable Byproduct	Disposal		6
lb/hr	lb/hr	lb/hr	wt%	7
				8
				9
				10
				11
				12
				13
				14
				15
				16
				17
				18
				19
				20
				21
				22
				23
				24
				25
				26
				27
				28
				29
				30
				31
				32
				33
				34
0.000	0.000			35
				36
				37
				38
		154	0	39
				40
				41
				42
4.05	4.05	1.57	0	43
				44
0.00	0.00	0.00	0	45
				46
0.00	0.00	0.00	0	47
				48
4.05	4.05	1.57	0.4	49
				50
				51
		108	3	52
				53
				54
				55
1,017	1,017			56
				57
				58
				59
				60
				61
				62
				63
		3,569	97	64
		3,677	100	65
1,017	2,034	3,677	100	66
				67
0.28	0.57	1.02		68
15	100	15		69
190	59	284		70

50 MW Utility Cycle
General Electric
LM 6000

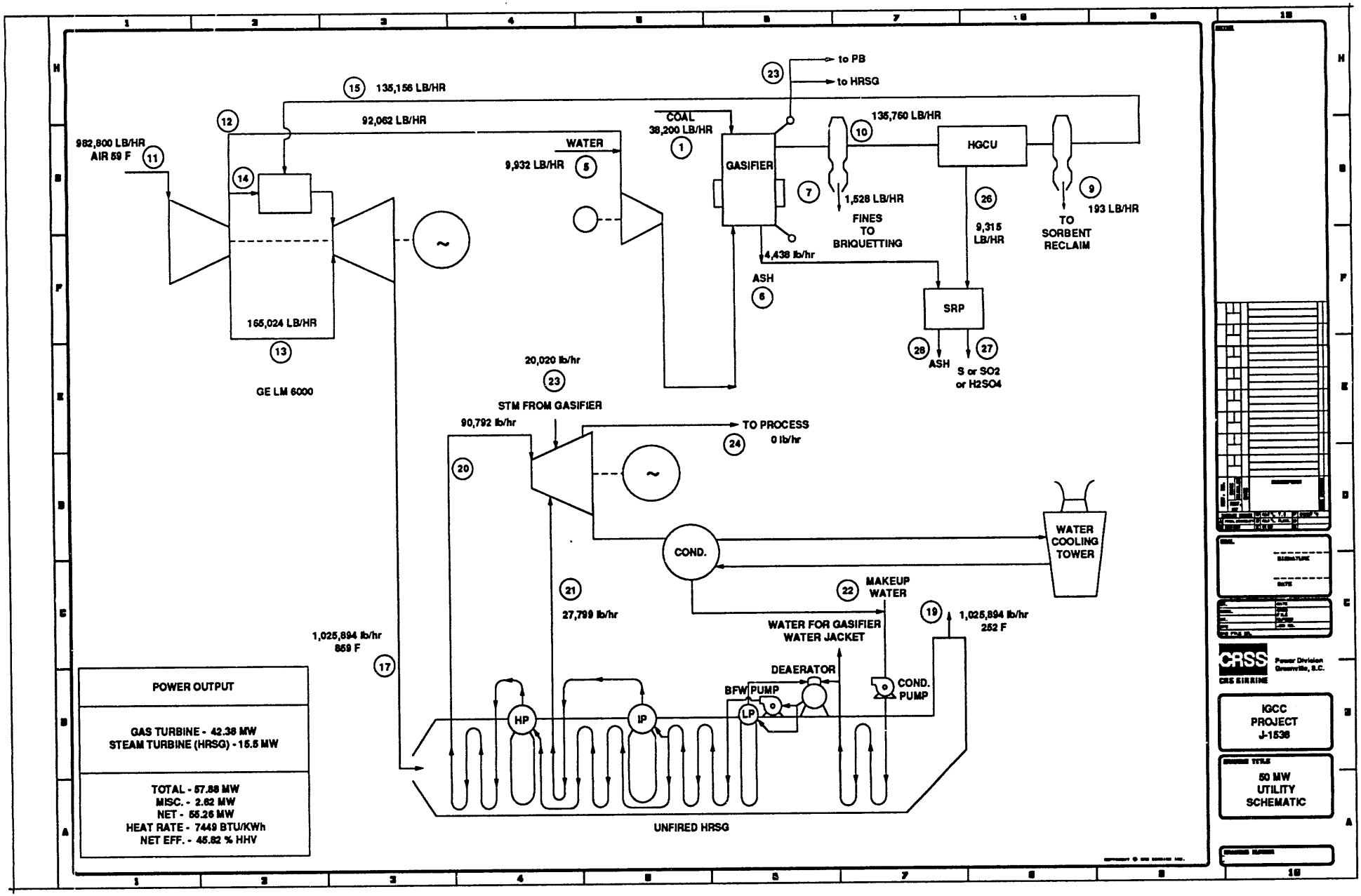
to PB
to HRSG
135,156 LB/HR
92,062 LB/HR
COAL
38,200 LB/HR
135,760 LB/HR
982,800 LB/HR
AIR 59 F
WATER
9,932 LB/HR
GASIFIER
HGCU
1,528 LB/HR
FINES
TO
BRIQUETTING
9,315
LB/HR
193 LB/HR
TO
SORBENT
RECLAIM
4,438 lb/hr
ASH
SRP
ASH
S or SO2
or H2SO4
165,024 LB/HR
GE LM 6000
20,020 lb/hr
STM FROM GASIFIER
90,792 lb/hr
TO PROCESS
0 lb/hr
WATER
COOLING
TOWER
COND.
MAKEUP
WATER
27,799 lb/hr
1,025,894 lb/hr
252 F
WATER FOR GASIFIER
WATER JACKET
1,025,894 lb/hr
859 F
DEAERATOR
BFW PUMP
COND.
PUMP
HP
IP
LP
UNFIRED HRSG
POWER OUTPUT
GAS TURBINE - 42.38 MW
STEAM TURBINE (HRSG) - 15.5 MW
TOTAL - 57.88 MW
MISC. - 2.62 MW
NET - 55.26 MW
HEAT RATE - 7449 BTU/KWh
NET EFF. - 45.82 % HHV
CRSS
Power Division
Greenville, S.C.
CRS SIRRINE
IGCC
PROJECT
J-1536
50 MW
UTILITY
SCHEMATIC

IGCC 54 - 50 MW UTILITY CYCLE
GENERAL ELECTRIC LM 6000

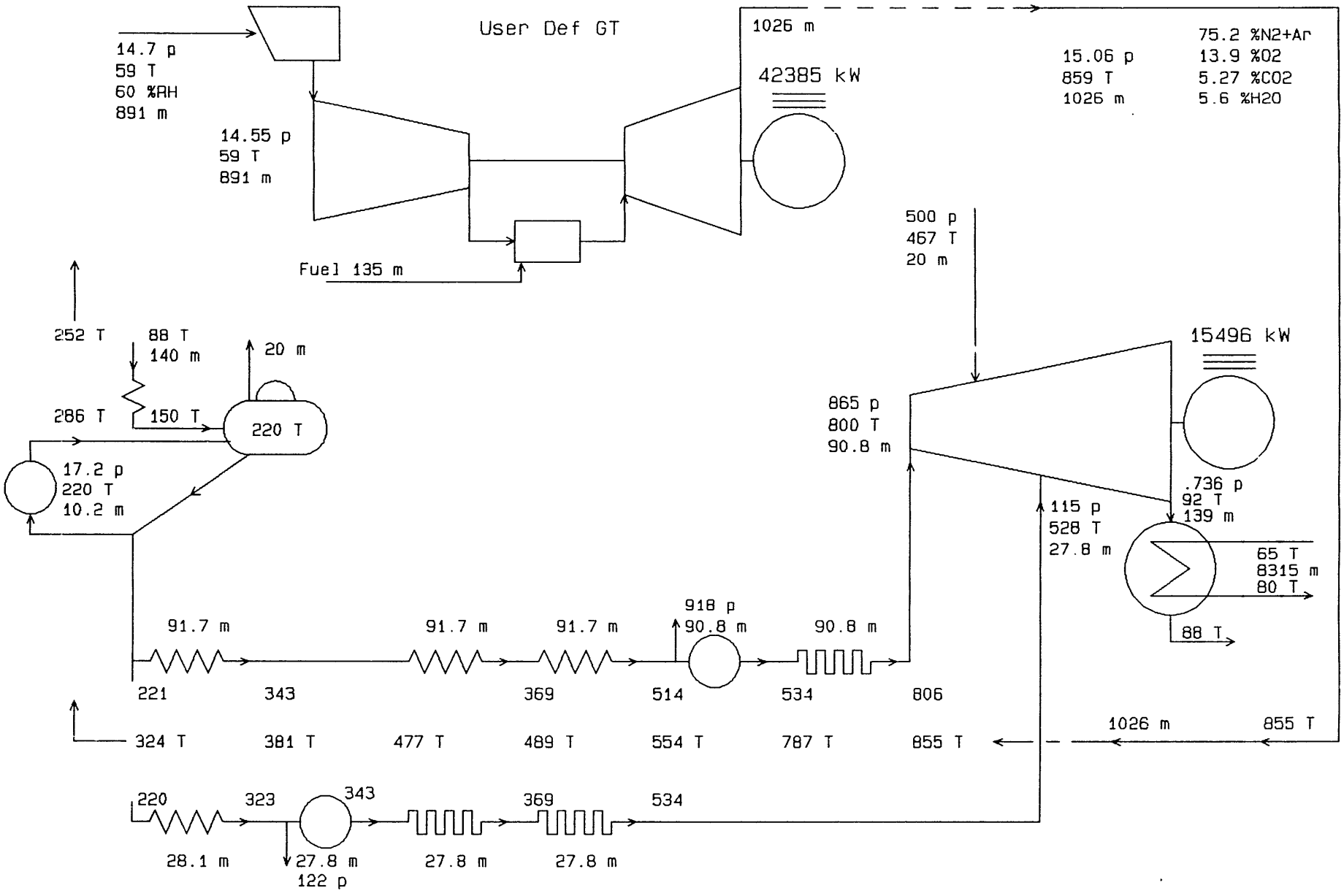

GTPRO 3.31 Michael Brown 10-15-1990 11:22:43
p psia, T F, m kpph

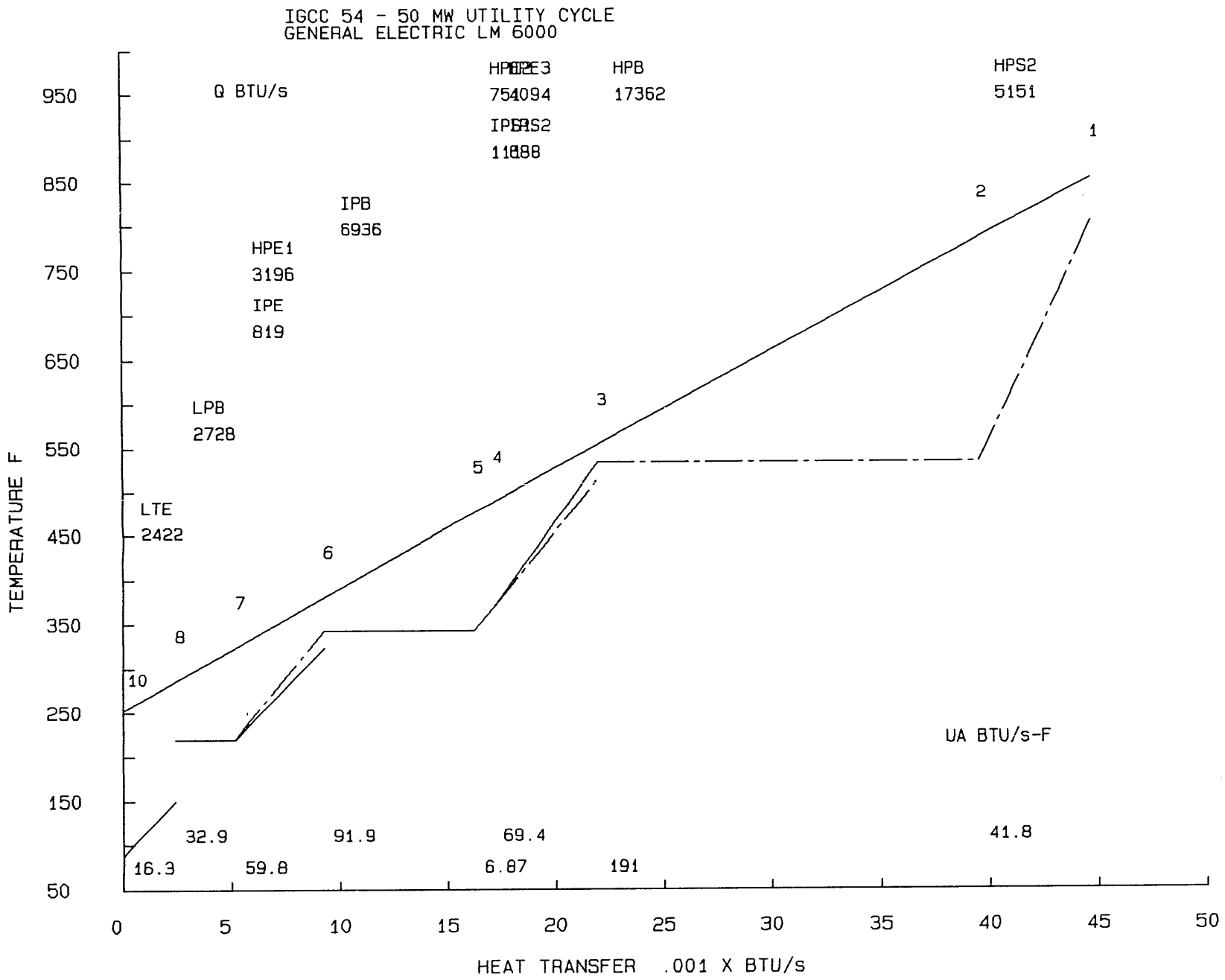

GTPRO 3.31 Michael Brown 10-15-1990 11:22:43

GTPRO 3.31 Michael Brown 10-15-1990 11:22:24
IGCC 54 - 50 MW UTILITY CYCLE
GENERAL ELECTRIC LM 6000

ESTIMATED G.T. SITE PERFORMANCE

Fuel=Fuel G.T. @ 100 % rating, XIGV= 0
Site ambient conditions: 14.7 psia, 59 F, 60 % RH
Inlet loss= 4 inch H2O, exhaust loss= 10 inch H2O
Evap. inlet cooler to 0 % RH.

#	Model	PR	TIT F	TET F	Mair kpph	kWe	H.R.LHV BTU/kWh	Mex kpph	N2+Ar %	O2 %	CO2 %	H2O %
52	User Def GT	0.0	0	859	891	42385	8640	1026	75.25	13.88	5.27	5.60

Fuel flow = 135 kpph
G.T. auxillary power = 0 kWe.

ESTIMATED G.T. CYCLE

STREAM	TEMP. F	PRESS. psia	MASSFLOW kpph	M.W.	MOLE COMPOSITION % N2+Ar	O2	CO2	H2O
Ambient air in	59	14.70	890.62	28.75	78.22	20.74	0.03	1.01
Compr. inlet	59	14.55	890.62	28.75	78.22	20.74	0.03	1.01
Turbine coolant	misc.		0.00					
Turbine exhaust	859	15.06	1026.07	28.85	75.25	13.88	5.27	5.60

Compressor= 0 Turbine= 0 Mech. loss= 437 kW
GT specific power @ gen term= 47.6 kW per kpph
GT efficiency @ gen term= 36.34 % HHV = 39.49 % LHV

GAS TURBINE/GENERATOR HEAT BALANCE

Energy in = 113831 BTU/s

Inlet air Sensible	Inlet air Latent	Water Inj.	Steam Inj.	Fuel HHV
1629	1647	0	0	110555

Energy out = 112880 BTU/s

Incompl comb & carcass rad	GT Mech. Losses	Gearbox Loss	Generator Loss	Exhaust Sensible	Exhaust Latent	Electric Output	Proc Air
509	277	0	828	60612	10478	40175	0

Zero enthalpy: dry gases & liquid water @ 32 F (273.15 K)
Heat Balance Error = In - Out = 951 BTU/s = .835 %

GTPRO 3.31 Michael Brown 10-15-1990 11:22:29 Steam cycle p.1
IGCC 54 - 50 MW UTILITY CYCLE
GENERAL ELECTRIC LM 6000
Type: 6 Subtype: 2 Induction

	P psia	T F	h BTU/lb	m kpph	UA BTU/s-F	Q BTU/s	A sq.ft
Cnd rtrn	0.74	87.57	55.58	138.614			
Makeup	17.72	80.00	48.02	1.186			
FW supl	17.72	87.51	55.51	139.800			
LTE				139.800	16	2422	7198
from LTE	17.20	150.00	117.88	139.800			
LPB				10.173	33	2728	13379
water bleed				20.020			
htd. FW	17.20	220.00	188.13	119.780			
HPFW	973.57	220.77	191.77	91.701			
HPE1				91.701	49	3196	21093
6	945.21	342.54	317.23	0.000			
HPE2				91.701	6	751	2496
7	931.44	369.13	346.71	0.000			
HPE3				91.701	57	4094	23475
8	917.68	514.08	507.42	0.000			
Blwdn	917.68	534.08	529.60	0.908			
HPB				90.793	191	17362	72266
9	917.68	534.08	1195.63	0.000			
HPS1				90.793	0	0	0
10	917.68	534.08	1195.63	0.000			
HPS2				90.793	42	5151	20121
11	890.95	806.00	1399.87	0.000			
Into HPT	865.00	800.00	1397.61	90.793			
bef addn	500.00	673.58	1345.06	90.793			
HPT addn	500.00	466.58	1205.38	20.020			
aft addn	500.00	628.54	1319.82	110.813			
HPT exit	115.00	359.02	1201.10	110.813			
IPFW	125.66	220.09	188.55	28.079			
IPE				28.079	10	819	4484
1	122.00	322.54	293.59	0.000			
Blwdn	122.00	342.54	314.10	0.278			
IPB				27.801	92	6936	36281
2	122.00	342.54	1191.52	0.000			
IPS1				27.801	1	111	449
3	122.00	369.13	1205.89	0.000			
IPS2				27.801	12	688	6266
4	118.45	534.08	1294.96	0.000			
Into LPT	115.00	389.44	1219.33	138.614			
LPT exit	0.74	91.57	955.39	138.614			

STEAM TURBINE

	No. of steps	Exit Quality	Efficiency(%)	Work (kW)
To HPT additn	2	1.185		
To HPT exit	4	1.012	84.83	5254
To LPT exit	13	0.860	80.99	10722

Gross power = 15975 kW. Mech/Elect losses = 479 kW.
Generator output = 15496 kWe. ST auxiliaries = 108 kWe
Boiler feedpumps = 113 kWe

CONDENSER

	p psia	T F	h BTU/lb	m kpph
LPT exit	0.7365	91.57	955.39	138.61
Saturation	0.7365	91.57		
Condensate well	0.7365	87.57	55.58	138.61
Cooling water in		65.00		8315.10
Cooling water out		80.00		8315.10

Number of passes= 1 UA= 1923 BTU/s-F Surface area = 9407 sq.ft
Tubes: OD = 1 in Length= 38.6 ft number= 932
Cooling water: Velocity= 9 ft/s DP = 9.02 psia Pumps = 93.8 kWe.

STEAM CYCLE HEAT BALANCE

Energy in = 77905 BTU/s

GT Exhaust Sensible	GT Exhaust Latent	Duct Burner Fuel HHV	Makeup+Proc Return	Pump Work	External Steam
60612	10478	0	16	96	6703

Energy out = 77905 BTU/s

Heat Radiated	Blow down	Mech/Elec Losses	Stack Sens.	Stack Latent	Condnsr C.W.	Process Steam	GT Injec.	Proc. Water	Electric Output
831	158	454	15603	10478	34646	0	0	1046	14688

Zero enthalpy: dry gases & liquid water @ 32 F (273.15 K)
Heat Balance Error = In - Out =-.297 BTU/s = 0 %

HRSG GAS-SIDE PROFILE

Gas	Tg F	Tw F HP/IP	DT F HP/IP	Qg/UA F	DELTA P inch H2O	UA BTU/s-F	Qg BTU/s	Vg ft/s	Tube Rows	Lngth ft
1	855.0	806.0	49.0							
				124.3	1.2	41.8	5202.6	58.0	4.2	1.8
	787.2	534.1	253.2							
2	787.2	534.1	253.2							
				91.9	3.6	190.9	17535.8	51.2	15.1	6.3
	554.1	534.1	20.0							
3	554.1	514.1	40.0							
3	554.1	534.1	20.0							
				69.6	1.3	69.4	4829.5	44.4	6.2	2.6
	488.6	369.1	119.4							
	488.6	369.1	119.4							
4	488.6	369.1	119.4							
4	488.6	369.1	119.4							
				126.7	0.1	6.9	870.4	42.7	0.6	0.3
	476.7	342.5	134.2							
	476.7	342.5	134.2							
5	476.7	342.5	134.2							
				76.2	1.4	91.9	7005.3	40.2	7.6	3.2
	380.5	342.5	38.0							
6	380.5	342.5	38.0							
6	380.5	322.5	58.0							
				67.8	0.9	59.8	4055.3	36.8	5.4	2.2
	324.4	220.8	103.6							
	324.4	220.1	104.3							
7	324.4	220.0	104.4							
				83.8	0.4	32.9	2755.3	34.6	2.8	1.2
	286.0	220.0	66.0							
8	286.0	150.0	136.0							
				149.8	0.2	16.3	2446.3	33.0	1.5	0.6
	251.9	87.5	164.4							

Duct burner fuel= 0 kpph
Gas mole composition: 75.2 %N2+Ar 13.9 %O2 5.27 %CO2 5.6 %H2O .002 %SO2
Flue gas dew point = 95 F M.W.= 28.9

HRSG TOTALS	Economisers	Evaporators	Superheaters	TOTAL
Q BTU/s	11282	27026	5950	44258
UA BTU/s-F	139	316	55	510
A sq.ft	58746	121926	26836	207507

Prime surface= 12071 fin surface= 195436 sq.ft. Averaged fin eff.= .72
HRSG frontal area = 316 sq.ft. Gas mass flux= 6.44 kpph/sq.ft
HRSG length = 18.1 ft, 43.4 tube rows, 759 ft of tubes per row.
2 in dia. tubes with serrated fins, staggered arrangement.
Fin thickness/dia.= .03 , height/dia.= .4 , spacing/dia.= .07
Tube transverse pitch/dia.= 2.5 , row longitudinal pitch/dia.= 2.5

GE LM 6000

Water cooling

air to coal ratio	2.41	air pressure	424	Cp air	0.248
water coal ratio	0.255	air temperature	955	Cp water	1.000
air to water ratio	9.45	water temperature	80	Cp steam	0.455

	lb	wt %	mols	mol %	partial pressure
air	9.45	90.43%	0.33	85.55%	362.72
water	1.00	9.57%	0.06	14.45%	61.28

sat temp 294

Temperature of combined stream entering boost compressor

399.50 F sat pressure 247 psia Rel. Hum. 24.81%

Temperature of stream exiting compressor (85% comp eff)

Tf = Ti + (Ti/n*{(Pf/Pi)^((k-1)/k)-1})

where
Ti - inlet temperature - 399.50 F - 859.50 R
n - efficiency - 85.00%
k - ratio of specific heat @ constant pressure to specific
to specific heat @ constant volume 1.384
Pf - final pressure 500 psia
Pi - initial pressure 424 psia

Tf = 446.83 F

	A	B	C	D	E	F	G	H	I	J	K	L	M	N	O
1	Standardized IGCC Gasifier Utility Application													Reference Coal -	
2	Mass & Energy Balance					GE LM 6000		Plant		Full Load				Predicted Gasifier Out	
3	Stream No.			1		2		3		4				5	
4	Identification			AR Coal		Coal Fines		Sized Coal		Comp Air @	2.41 A/C			Water @	0.26
5	From			Illinois #6		Sizer @	30%	Combined Streams		Aux Compr &/or Booster Compr				Cooling Water	H2O/
6	To			Sizer		Briquetting		Gasifier		Gasifier				Gasifier	Coal
7	Gas	Mol Wt		lb/hr	wt %	lb/hr	wt %	lb/hr	wt %	lb/hr	lb/mol	wt %	mol %	lb/hr	
8															
9	CO	28.010								0	0.00	0.00	0.00		
10	H2	2.016								0	0.00	0.00	0.00		
11	CO2	44.010								44	0.01	0.05	0.03		
12	H2O	18.015								585	0.18	0.64	1.02	9,932	
13	CH4	16.042								0	0.00	0.00	0.00		
14	C2H6	30.068								0	0.00	0.00	0.00		
15	H2S	34.076								0	0.00	0.00	0.00		
16	COS	60.070								0	0.00	0.00	0.00		
17	N2	28.013								69,070	21.65	75.03	77.28		
18	Ar	39.948								1,209	0.38	1.31	0.95		
19	HCl	36.461								0	0.00	0.00	0.00		
20	HCN	27.026								0	0.00	0.00	0.00		
21	NH3	17.030								0	0.00	0.00	0.00		
22	CS2	76.131								0	0.00	0.00	0.00		
23	SO2	64.059								0	0.00	0.00	0.00		
24	NO	30.006								0	0.00	0.00	0.00		
25	O2	31.999								21,154	6.63	22.98	20.72		
26	NaCl	58.497								0	0.00	0.00	0.00		
27	KCl	74.596								0	0.00	0.00	0.00		
28	Total Gas (lb/hr)									92,062	28.86	100.00	100.00	9,932	
29															
30	Volumetric Flow Rates		(STP 14.7 psia, 59F)												
31	(acfm)									1,035					
32	(scfm)									20,144					
33															
34	Heat (BTU/lb)													1257	
35	Cp (BTU/lb F)									0.246					
36	HHV (BTU/lb)			10,776		10,776		10,776		0					
37	LHV (BTU/lb)			10,239		10,239		10,260		0					
38	Sensible Heat above														
39	59 F Btu/lb steam			0		0		0		95					
40	Latent Heat of														
41	Water Btu/lb steam									7					
42															
43	Chemical Heat			391.13		117.34		407.64		0.00					
44	(LHV) MBtu/hr														
45	Sensible Heat			0.00		0.00		0.00		8.78					
46	above 59 F MBtu/hr														
47	Latent Heat			20.51		6.15		20.51		0.61					
48	of Water MBtu/hr														
49	TotalHeat(MBtu/hr)			411.64		123.49		428.15		9.39				12.48	
50				Number of Gasifiers for 85% Plant Availability @90% Gasifier Availability,										500	psia &
51															
52	C	12.011		22,962	60.11%	6,889	60.11%	24,148	60.78%		12				
53	H	1.008		1,593	4.17%	478	4.17%	1,593	4.01%		65			1,104	
54	O	16.000		2,892	7.57%	868	7.57%	2,892	7.28%		21,706			8,828	
55	N	14.007		451	1.18%	135	1.18%	451	1.13%		69,070			9,932	Total
56	S	32.060		1,100	2.88%	330	2.88%	1,100	2.77%		90,853	Total			
57	CL2	35.500		0	0.00%	0	0.00%	0	0.00%						
58	H2O	18.016		5,386	14.10%	1,616	14.10%	5,386	13.56%						
59	ZnFe2O4														
60	ZnS														
61	FeS														
62	Fe2O3														
63	ZnO														
64	ASH			3,820	10.00%	1,146	10.00%	4,162	10.48%						
65	Total Solids			38,200	100.01%	11,460	100.01%	39,732	100.00%						
66	Total Flow (pph)			38,200 *		11,460		39,732		92,062				9,932	
67															
68	Total Flow (pps)			10.61		3.18		11.04		25.57				2.76	
69	Pressure (psia)			14.7		14.7		14.7		500 *				500 *	
70	Temperature (F)			59		59		59		447 *				447 *	

	O	P	Q	R	S	T	U	V	W	X	Y	Z	AA	AB	AC	AD
al -		Illinois #6								J-1538		DE-AC21-89MC26291				1
sifier Output				10/16/90				Revision 7								2
		6	Uncomb	7		8		9				10	55 scf/lb of coal			3
D	0.26	Ash	Carbon	Fines (Char)		Tar		Dust(per RTI dia)		Miscellaneous		Hot Gas with Tars				4
ater	H2O/	Gasifier	2.69%	Gasifier @	4.00%	Gasifier @	6.00%	Final Cyclone		Gasifier Heat		Gasifier	N2 in coal			5
r	Coal	Ash Silo		Briquetting		HGCU		Reclaim		Losses		HGCU	to NH3 Conv		90.1%	6
		lb/hr	wt %	lb/hr	wt %	lb/hr	wt %	lb/hr	wt %			lb/hr	lb/mol	wt %	mol %	7
																8
												35,650	6.39	26.26	22.82	9
												1,604	0.29	1.18	14.26	10
												15,954	2.86	11.75	6.50	11
9,932												6,931	1.24	5.11	6.90	12
												2,913	0.52	2.15	3.26	13
												578	0.10	0.43	0.34	14
												1,002	0.18	0.74	0.53	15
												295	0.05	0.22	0.09	16
												69,114	12.39	50.91	44.24	17
												1,209	0.22	0.89	0.54	18
												0	0.00	0.00	0.00	19
												47	0.01	0.03	0.03	20
												463	0.08	0.34	0.49	21
												0	0.00	0.00	0.00	22
												0	0.00	0.00	0.00	23
												0	0.00	0.00	0.00	24
												0	0.00	0.00	0.00	25
												0	0.00	0.00	0.00	26
												0	0.00	0.00	0.00	27
9,932												135,760	24.34	100.00	100.00	28
																29
												135,760				30
												3,159				31
												35,227				32
																33
1257																34
		0.260		0.260		0.26		0.260				0.329				35
		0		10,936		17,329		0				2,588.8				36
		0		10,936		16,571		0				2,375.0				37
																38
		154		276		276		323				349				39
																40
		0		0		749		0				214				41
																42
		8.96		16.71		37.98		0.00				322.43				43
																44
		0.68		0.42		0.63		0.06		20.3 Water/steam jacket		47.34				45
																46
		0.00		0.00		1.72		0.00		4.7 Traversing Stirrer		29.04	Gas HHV=	189	Btu/scf	47
													Estimated=	600	Btu/lb	48
12.48		9.64		17.13		40.33		0.06		25.1 Total		398.80	Calculated=	623	Btu/lb	49
psia & 17 tph (typical) Coal each:					1.6		Unit Output (MWn)			55.3 MWn			BulkGas=	4.05%	H2O	50
													Calc Comb Temp (F)		2280	51
		618	13.92	1,186	77.60%	2,017	88.00%					22,356	22,356	0.00%		52
1,104				0	0.00%	183	8.00%					3,360	3,360	0.00%		53
8,828				0	0.00%	46	2.00%					38,214	38,214	0.00%		54
9,932	Total			0	0.00%	23	1.00%					69,521	69,520	0.00%		55
		0	0.00	0	0.00%	23	1.00%					1,100	1,100	-0.02%		56
				0	0.00%						Sub-Totals	134,551	134,551	0.00%		57
				0	0.00%							Sum of	Sum of Gas	Mass		58
								173	90			Streams	Constituents	Unbalance		59
								4	2			balance check				60
								12	6			Cycle Efficiency(g) = 47.99%				61
								0	0			Cycle Efficiency (n) = 45.82%				62
								4	2							63
		3,820	86.08	342	22.40%			0	0							64
		4,438	100	1,528	100.00%	2,292	100.00%	193	100							65
9,932		4,438		1,528		2,292		193				135,760				66
																67
2.76		1.23		0.42		0.64		0.05				37.71				68
500 *		14.7		500 *		500 *		499				499				69
447 *		650		1120		1120		1200				1120				70

	AE	AF	AG	AH	AI	AJ	AK	AL	AM	AN	AO	AP	AQ	AR
1	**Standardized IGCC Gasifier Utility Application**											**Reference Coal - Ill**		
2	**Mass & Energy Balance**			**GE LM 6000**		**Plant**						**Predicted Gasifier Out**		
3	Stream No.		11				12				13	14		
4	Identification		Air				Bleed Air				Bleed Air	Compressor Discharge		
5	From		Atmosphere				Compressor				for	Compressor		
6	To		Gas Turbine Compressor				Booster Compressor Cooler				Coolant	Combustor		
7	Gas	Mol Wt	lb/hr	lb/mol	wt %	mol %	lb/hr	lb/mol	wt %	mol %	lb/hr	lb/hr	lb/mol	wt %
8														
9	CO	28.010	0	0.00	0.00	0.00	0	0.00	0.00	0.00	0	0	0.00	0.00
10	H2	2.016	0	0.00	0.00	0.00	0	0.00	0.00	0.00	0	0	0.00	0.00
11	CO2	44.010	465	0.01	0.05	0.03	44	0.01	0.05	0.03	78	344	0.01	0.05
12	H2O	18.015	6,249	0.18	0.64	1.02	585	0.18	0.64	1.02	1,049	4,614	0.18	0.64
13	CH4	16.042	0	0.00	0.00	0.00	0	0.00	0.00	0.00	0	0	0.00	0.00
14	C2H6	30.068	0	0.00	0.00	0.00	0	0.00	0.00	0.00	0	0	0.00	0.00
15	H2S	34.076	0	0.00	0.00	0.00	0	0.00	0.00	0.00	0	0	0.00	0.00
16	COS	60.070	0	0.00	0.00	0.00	0	0.00	0.00	0.00	0	0	0.00	0.00
17	N2	28.013	737,350	21.65	75.03	77.28	69,070	21.65	75.03	77.28	123,810	544,470	21.65	75.03
18	Ar	39.948	12,909	0.38	1.31	0.95	1,209	0.38	1.31	0.95	2,168	9,532	0.38	1.31
19	HCl	36.461	0	0.00	0.00	0.00	0	0.00	0.00	0.00	0	0	0.00	0.00
20	HCN	27.026	0	0.00	0.00	0.00	0	0.00	0.00	0.00	0	0	0.00	0.00
21	NH3	17.030	0	0.00	0.00	0.00	0	0.00	0.00	0.00	0	0	0.00	0.00
22	CS2	76.131	0	0.00	0.00	0.00	0	0.00	0.00	0.00	0	0	0.00	0.00
23	SO2	64.059	0	0.00	0.00	0.00	0	0.00	0.00	0.00	0	0	0.00	0.00
24	NO	30.006	0	0.00	0.00	0.00	0	0.00	0.00	0.00	0	0	0.00	0.00
25	O2	31.999	225,827	6.63	22.98	20.72	21,154	6.63	22.98	20.72	37,919	166,754	6.63	22.98
26	NaCl	58.497	0	0.00	0.00	0.00	0	0.00	0.00	0.00	0	0	0.00	0.00
27	KCl	74.596	0	0.00	0.00	0.00	0	0.00	0.00	0.00	0	0	0.00	0.00
28	Total Gas (lb/hr)		982,800	28.86	100.00	100.00	92,062	28.86	100.00	100.00	165,024	725,714	28.86	100.00
29														
30	Volumetric Flow Rates (STP 14.7 psia, 59F)													
31	(acfm)		215,042				1,904					15,009		
32	(scfm)		215,042				20,144				36,367	158,790		
33														
34	hgAdiabHeat(BTU/lb)													
35	Cp (BTU/lb F)		0.240				0.262					0.262		
36	HHV (BTU/lb)		0.0				0.0					0.0		
37	LHV (BTU/lb)		0.0				0.0					0.0		
38	Sensible Heat													
39	above 59 F Btu/lb		0				235					235		
40	Latent Heat													
41	of Water Btu/lb		7				7					7		
42														
43	Chemical Heat		0.00				0.00					0.00		
44	(LHV) MBtu/hr													
45	Sensible Heat		0.00				21.65					170.67		
46	above 59 F MBtu/hr													
47	Latent Heat		6.50				0.61					4.80		
48	of Water MBtu/hr													
49	TotalHeat(MBtu/hr)		6.50				22.26					175.47		
50												Parasitic Load		2.62 MV
51														
52	C	12.011		127				12			21		90	94
53	H	1.008		694				65			117		513	513
54	O	16.000		231,719				21,706			38,909		171,105	171,105
55	N	14.007		737,350				69,070			123,810		544,470	544,470
56	S	32.060		0				0			0		0	0
57	CL2	35.500		969,891	sub-totals			90,853	sub-totals		162,856	sub-totals	716,182	716,182
58	H2O	18.016												balance check
59	ZnFe2O4													
60	ZnS													
61	FeS													
62	Fe2O3													
63	ZnO													
64	ASH													
65	Total Solids													
66	Total Flow (pph)		982,800				92,062				165,024	725,714		
67														
68	Total Flow (pps)		273.00 *				25.57			*	45.84	201.59		
69	Pressure (psia)		14.7 *				424 *					424		
70	Temperature (F)		59 *				955 *					955		

AR	AS	AT	AU	AV	AW	AX	AY	AZ	BA	BB	BC	BD	BE	BF	BG
l • Illinois #6								J-1538			DE-AC21-89MC26291				1
lfier Output				Revision 7										10/16/90	2
		15				16					17				3
r Discharge			Fuel		%H2S	Inlet Gas		Thrml NO (ppmvd)		25	Exhaust Gas				4
r			HGCU		Removed	GT Combustor		*Rich/Lean Red. F		85%	Gas Turbine				5
			GT Combustor		99.0%	GT Expander									6
wt %	mol %	lb/hr	mol/hr	wt %	mol %	lb/hr	lb/mol	mols	wt %	mol%	lb/hr	mols/hr	wt %	mol%	7
															8
0.00	0.00	35,650	1,273	26.38	22.84	0	0.00	0.00	0.00	0.00	0	0.00	0.00	0.00	9
0.00	0.00	1,584	786	1.17	14.10	0	0.00	0.00	0.00	0.00	0	0.00	0.00	0.00	10
0.05	0.03	15,954	363	11.80	6.51	82,102	2.76	0.0022	9.54	6.28	82,180	1867.30	8.01	5.27	11
0.64	1.02	7,631	424	5.65	7.60	34,851	1.17	0.00	4.05	6.51	35,900	1992.80	3.50	5.62	12
0.00	0.00	2,913	182	2.16	3.26	0	0.00	0.00	0.00	0.00	0	0.00	0.00	0.00	13
0.00	0.00	578	19	0.43	0.34	0	0.00	0.00	0.00	0.00	0	0.00	0.00	0.00	14
0.00	0.00	10	0	0.01	0.01	0	0.00	0.00	0.00	0.00	0	0.00	0.00	0.00	15
0.00	0.00	3	0	0.00	0.00	0	0.00	0.00	0.00	0.00	0	0.00	0.00	0.00	16
75.03	77.28	69,114	2,467	51.14	44.28	613,907	20.66	0.0255	71.31	73.76	737,717	26334.81	71.91	74.33	17
1.31	0.95	1,209	30	0.89	0.54	10,741	0.36	0.00	1.25	0.90	12,909	323.14	1.26	0.91	18
0.00	0.00	0	0	0.00	0.00	0	0.00	0.00	0.00	0.00	0	0.00	0.00	0.00	19
0.00	0.00	47	2	0.03	0.03	0	0.00	0.00	0.00	0.00	0	0.00	0.00	0.00	20
0.00	0.00	463	27	0.34	0.49	0	0.00	0.00	0.00	0.00	0	0.00	0.00	0.00	21
0.00	0.00	0	0	0.00	0.00	0	0.00	0.00	0.00	0.00	0	0.00	0.00	0.00	22
0.00	0.00	0	0	0.00	0.00	22	0.0007	0.0000	0.0026	0.0012	22	0.34	0.00	0.00	23
0.00	0.00	0	0	0.00	0.00	180	0.0060	0.0000	0.0209	0.0202	180	5.99	0.02	0.02	24
22.98	20.72	0	0	0.00	0.00	119,068	4.01	0.0043	13.83	12.52	156,987	4906.00	15.30	13.85	25
0.00	0.00	0	0	0.00	0.00	0	0.00	0.00	0.00	0.00	0	0.00	0.00	0.00	26
0.00	0.00	0	0	0.00	0.00	0	0.00	0.00	0.00	0.00	0	0.00	0.00	0.00	27
100.00	100.00	135,156	5,572	100.00	100.00	860,870	28.97	0.0345	100.00	100.00	1,025,894	35430.38	100.00	100.00	28
						860,871 bal ck					1,025,895	bal ck			29
															30
		3,275				34,020					552,350				31
		35,181				187,588					223,696				32
															33
															34
		0.334				0.288					0.267				35
		2,548.9				0.0					0.0				36
		2,330.0				0.0					0				37
															38
		375				619					214				39
															40
		219				42					36				41
															42
		314.92				0.00					0.00				43
															44
		50.62				533.30					219.50				45
															46
		29.58				36.25					37.34				47
															48
		395.11				569.54	570.58 bal chk				256.84				49
2.62 MWg			Combustion Turbine Output			42.385 MWg					1.04 Turbine Compressor Surge Margin				50
															51
94	0.00%		22,298			22,391	22,391	0.00%			22,413	22,413	0.00%		52
513	0.00%		3,360			3,872	3,872	0.00%			3,989	3,989	0.00%		53
171,105	0.00%		33,758			209,863	209,864	0.00%			248,772	248,772	0.00%		54
544,470	0.00%		69,520			613,991	613,991	0.00%			737,801	737,801	0.00%		55
0	0.00%		11			11	11	0.10%			11	11	0.00%		56
716,182	0.00%		133,947	sub-total		850,129	850,130	0.00%	sub-total		1,012,986	1,012,986	0.00%	sub-total	57
balance check								balance check					balance check		58
															59
															60
															61
															62
															63
															64
															65
		135,156				860,870					1,025,894				66
															67
		37.54				239.13					284.97				68
		499				417 *					15.13				69
		1180				2,210					859 *				70

	BH	BI	BJ	BK	BL	BM	BN	BO	BP	BQ	BR	BS
1	**Standardized IGCC Gasifier Utility Application**							**Reference Coal -**		**Illinois #6**		
2	**Mass & Energy Balance**			**GE LM 6000**				**Predicted Gasifier Output**				
3	Stream No.			18			19	Thrml NO (ppmvd)		25	20	21
4	Identification			Fuel for Supplementary Firing			Flue Gas		SCR Red F	80 %	Superheated Steam	Low Pressure Stea
5	From			Gasifier			HRSG		R/L Red F	85 %	HRSG	HRSG
6	To			HRSG			Stack		NOx Reburn F	0 %	Steam Turbine	Steam Turbine
7	Gas	Mol Wt	lb/hr	lb/mol	wt %	mol %	lb/hr	mols/hr	wt %	mol %	lb/hr	lb/hr
8												
9	CO	28.010	0	6.39	26.26	22.82	0	0.00	0.00	0.00		
10	H2	2.016	0	0.29	1.18	14.26	0	0.00	0.00	0.00		
11	CO2	44.010	0	2.86	11.75	6.50	82,180	1867.30	8.01	5.27		
12	H2O	18.015	0	1.24	5.11	6.90	35,900	1992.80	3.50	5.63		
13	CH4	16.042	0	0.52	2.15	3.26	0	0.00	0.00	0.00		
14	C2H6	30.068	0	0.10	0.43	0.34	0	0.00	0.00	0.00		
15	H2S	34.076	0	0.18	0.74	0.53	0	0.00	0.00	0.00		
16	COS	60.070	0	0.05	0.22	0.09	0	0.00	0.00	0.00		
17	N2	28.013	0	12.39	50.91	44.24	737,717	26334.81	71.92	74.34		
18	Ar	39.948	0	0.22	0.89	0.54	12,909	323.14	1.26	0.91		
19	HCl	36.461	0	0.00	0.00	0.00	0	0.00	0.00	0.00		
20	HCN	27.026	0	0.01	0.03	0.03	0	0.00	0.00	0.00		
21	NH3	17.030	0	0.08	0.34	0.49	0	0.00	0.00	0.00		
22	CS2	76.131	0	0.00	0.00	0.00	0	0.00	0.00	0.00	Stack Emissions (lb/MBtu)	
23	SO2	64.059	0	0.00	0.00	0.00	22	0.34	0.00	0.00	0.053	
24	NO	30.006	0	0.00	0.00	0.00	36	1.20	0.00	0.00	0.09	
25	O2	31.999	0	0.00	0.00	0.00	156,987	4906.00	15.30	13.85		
26	NaCl	58.497	0	0.00	0.00	0.00	0	0.00	0.00	0.00		
27	KCl	74.596	0	0.00	0.00	0.00	0	0.00	0.00	0.00		
28	Total Gas (lb/hr)		0	24.34	100.00	100.00	1,025,750	35425.59	100.00	100.00		
29							1,025,751	bal chk				
30	Volumetric Flow Rates (STP 14.7 psia, 59F)											
31	(acfm)		0				306,840					
32	(scfm)		0				223,666					
33												
34	Heat (BTU/lb)										1398	12
35	Cp (BTU/lb F)		0.334				0.247					
36	HHV (BTU/lb)		2548.9				0.0					
37	LHV (BTU/lb)		2330.0				0					
38	Sensible Heat above											
39	59 F Btu/lb steam		0				48					
40	Latent Heat of											
41	Water Btu/lb steam		0				36					
42												
43	Chemical Heat		0.00				0.00					
44	(LHV) MBtu/hr											
45	Sensible Heat		0.00				48.93					
46	above 59 F MBtu/hr											
47	Latent Heat		0.00				37.34					
48	of Water MBtu/hr											
49	TotalHeat(MBtu/hr)		0.00				86.26				126.93	1
50												HRSG Turbine Ou
51												
52	C	12.011		0			22,413	22,413	0.00%			
53	H	1.008		0			3,989	3,989	0.00%			
54	O	16.000		0			248,696	248,696	0.00%			
55	N	14.007		0			737,734	737,734	0.00%			
56	S	32.060		0			11	11	0.00%			
57	CL2	35.500		0	sub-total		1,012,842	1,012,842	0.00%	sub-total		
58	H2O	18.016										
59	ZnFe2O4											
60	ZnS											
61	FeS											
62	Fe2O3											
63	ZnO											
64	ASH											
65	Total Solids											
66	Total Flow (pph)		0				1,025,894				90,792	2
67												
68	Total Flow (pps)		0 *				284.97				25.22	
69	Pressure (psia)		499				14.7				865	
70	Temperature (F)		1180				252 *				800	

BS	BT	BU	BV	BW
	J-1538	DE-AC21-89MC26291		1
	Revision 7		10/16/90	2
21	22	23	24	3
ressure Steam	Make Up Water	Sat. Steam	Process Stm	4
HRSG	WaterTreatment	Gasifier	Stm Turbine	5
am Turbine	HRSG	Steam Turbine	Process Facility	6
lb/hr	lb/hr	lb/hr	lb/hr	7
				8
				9
				10
				11
				12
				13
				14
				15
				16
				17
				18
				19
				20
				21
				22
				23
				24
				25
				26
				27
				28
				29
				30
				31
				32
				33
1237.6	48	1204		34
				35
				36
				37
				38
				39
				40
				41
				42
				43
				44
				45
				46
				47
				48
34.40	0.53	20.34		49
Turbine Output	15.5	MWg		50
				51
				52
				53
				54
				55
				56
				57
				58
				59
				60
				61
				62
				63
				64
				65
27,799	11,120	20,020	0	66
				67
7.72	3.09	5.56	0.00	68
115	15	500	250	69
432	80	467	420	70

	BX	BY	BZ	CA	CB	CC	CD	CE	CF	CG	CH	CI
1	Standardized IGCC Gasifier Utility Application								Reference Coal -			Illinois #6
2	Mass & Energy Balance				GE LM 6000				Predicted Gasifier Output			
3	Stream No.		25		26					27		27a
4	Identification		Regen Recycle Loop		Conc SO2 Bleed					Elemental Sulfur		Elemental Sulfur
5	From		Recycle Blower		Regen Loop					Resox Process		DSRP
6	To		Regenerator		SRP					Marketable Byproduct		Marketable Byprodu
7	Gas	Mol Wt	lb/hr	wt%	lb/hr	lbs/mol	mols/hr	wt%	mol%	lb/hr	wt%	lb/hr
8												
9	CO	28.010			0	0.00	0.00	0.00	0.00			
10	H2	2.016			0	0.00	0.00	0.00	0.00			
11	CO2	44.010	55	0.05	5	0.02	0.11	0.05	0.04			
12	H2O	18.015	692	0.62	58	0.20	3.20	0.62	1.11			
13	CH4	16.042			0	0.00	0.00	0.00	0.00			
14	C2H6	30.068			0	0.00	0.00	0.00	0.00			
15	H2S	34.076			0	0.00	0.00	0.00	0.00			
16	COS	60.070			0	0.00	0.00	0.00	0.00			
17	N2	28.013	83,693	74.87	6,974	24.10	248.97	74.87	86.02			
18	Ar	39.948	0	0.00	0	0.00	0.00	0.00	0.00			
19	HCl	36.461			0	0.00	0.00	0.00	0.00			
20	HCN	27.026			0	0.00	0.00	0.00	0.00			
21	NH3	17.030			0	0.00	0.00	0.00	0.00			
22	CS2	76.131			0	0.00	0.00	0.00	0.00			
23	SO2	64.059	26,129	23.37	2,177	7.52	33.99	23.37	11.74			
24	NO	30.006			0	0.00	0.00	0.00	0.00			
25	O2	31.999	1,214	1.09	101	0.35	3.16	1.09	1.09			
26	NaCl	58.497			0	0.00	0.00	0.00	0.00			
27	KCl	74.596			0	0.00	0.00	0.00	0.00			
28	Total Gas (lb/hr)		111,784	100.00	9,315	32.19	289	100.00	100.00			
29												
30	Volumetric Flow Rates		(STP 14.7 psia, 59 F)									
31	(acfm)		3,929		310							
32	(scfm)		21,928		1,827							
33												
34	Heat (BTU/lb)											
35	Cp (BTU/lb F)		0.240		0.240					0.000		0.
36	HHV (BTU/lb)											
37	LHV (BTU/lb)											
38	Sensible Heat above											
39	59 F Btu/lb steam											
40	Latent Heat of											
41	Water Btu/lb steam											
42												
43	Chemical Heat									4.33		
44	(LHV) MBtu/hr											
45	Sensible Heat		35.98		2.77					0.00		
46	above 59 F MBtu/hr											
47	Latent Heat		0.72		0.06					0.00		
48	of Water MBtu/hr											
49	TotalHeat(MBtu/hr)		36.70		2.83					4.33		
50												
51												
52	C	12.011										
53	H	1.008										
54	O	16.000										
55	N	14.007										
56	S	32.060								1,089		1
57	CL2	35.500										
58	H2O	18.016										
59	ZnFe2O4											
60	ZnS											
61	FeS											
62	Fe2O3											
63	ZnO											
64	ASH				0.00			0				
65	Total Solids											
66	Total Flow (pph)		111,784		9,315					1,089		1
67												
68	Total Flow (pps)		31.05		2.59					0.30		
69	Pressure (psia)		294		294					15		
70	Temperature (F)		1400		1300					284		

CI	CJ	CK	CL	CM
#6	J-1538	DE-AC21-89MC26291		1
	Revision 7		10/16/90	2
27a	27b	28		3
ntal Sulfur	Sulfur Dioxide	Ash		4
SRP	SO2 Recovery Unit	SO2 Reductor		5
le Byproduct	Marketable Byproduct	Disposal		6
lb/hr	lb/hr	lb/hr	wt%	7
				8
				9
				10
				11
				12
				13
				14
				15
				16
				17
				18
				19
				20
				21
				22
				23
				24
				25
				26
				27
				28
				29
				30
				31
				32
				33
				34
0.000	0.000			35
				36
				37
				38
		154	0	39
				40
				41
				42
4.33	4.33	1.56	0	43
				44
0.00	0.00	0.00	0	45
				46
0.00	0.00	0.00	0	47
				48
4.33	4.33	1.56	0.4	49
				50
				51
		108	3	52
				53
				54
				55
1,089	1,089			56
				57
				58
				59
				60
				61
				62
				63
		3,820	97	64
		3,928	100	65
1,089	2,177	3,928	100	66
				67
0.30	0.60	1.09		68
15	100	15		69
190	59	284		70

100 MW Utility Cycle
Westinghouse 501 D5

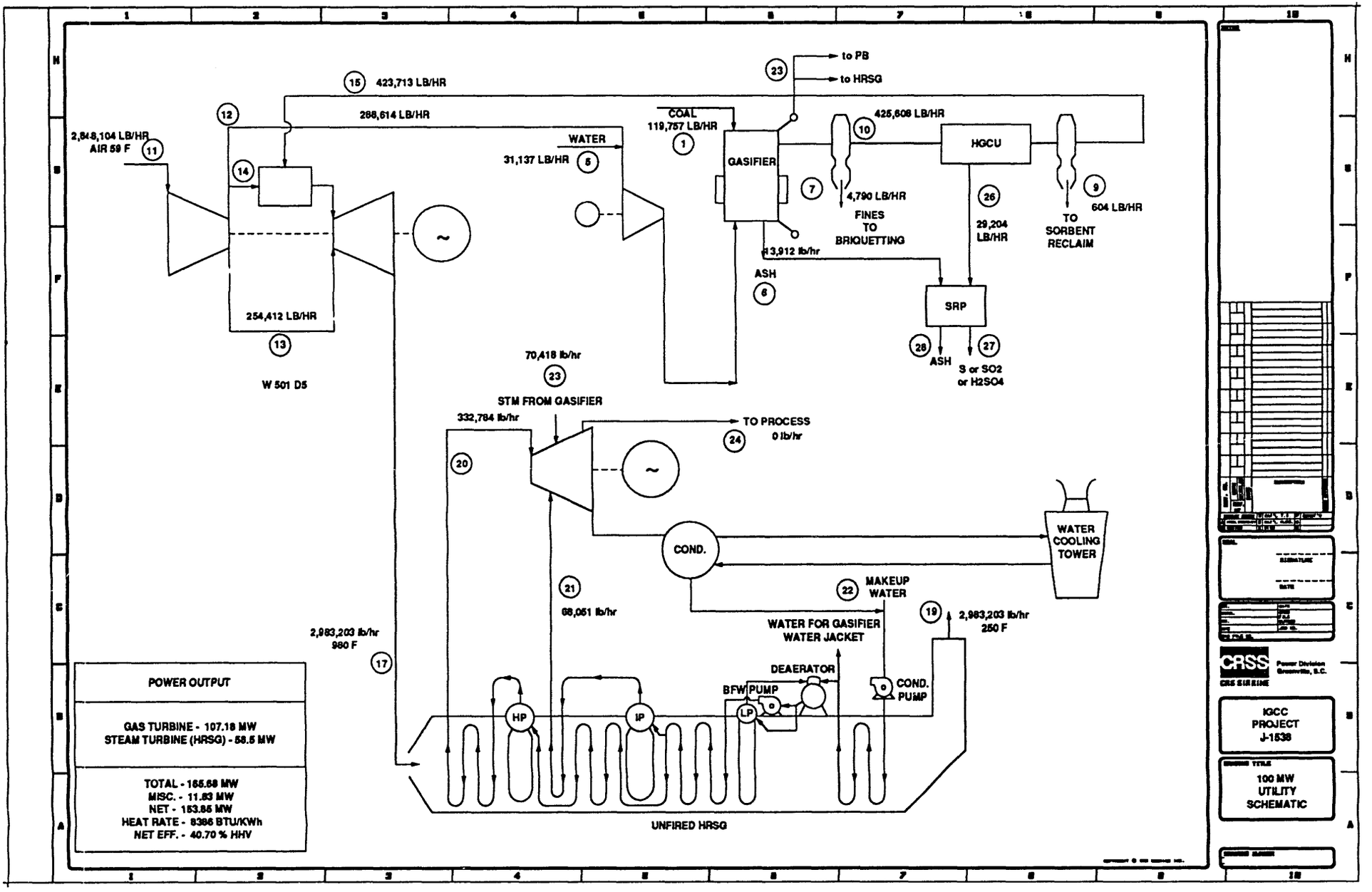
to PB
to HRSG
23
15 423,713 LB/HR
12
288,614 LB/HR
COAL
119,757 LB/HR
1
425,608 LB/HR
10
2,848,104 LB/HR
AIR 59 F
11
WATER
31,137 LB/HR
5
GASIFIER
HGCU
14
7
4,790 LB/HR
FINES
TO
BRIQUETTING
26
29,204
LB/HR
9
604 LB/HR
TO
SORBENT
RECLAIM
13,912 lb/hr
ASH
6
SRP
254,412 LB/HR
13
W 501 D5
25
ASH
27
S or SO2
or H2SO4
70,418 lb/hr
23
STM FROM GASIFIER
332,784 lb/hr
TO PROCESS
24
0 lb/hr
20
COND.
WATER
COOLING
TOWER
21
68,051 lb/hr
22
MAKEUP
WATER
19
2,983,203 lb/hr
250 F
WATER FOR GASIFIER
WATER JACKET
2,983,203 lb/hr
980 F
17
DEAERATOR
BFW PUMP
COND.
PUMP
HP
IP
LP
UNFIRED HRSG
POWER OUTPUT
GAS TURBINE - 107.18 MW
STEAM TURBINE (HRSG) - 58.5 MW
TOTAL - 165.68 MW
MISC. - 11.83 MW
NET - 153.85 MW
HEAT RATE - 8386 BTU/KWh
NET EFF. - 40.70 % HHV
CRSS
CRS SIRINE
Power Division
Greenville, S.C.
IGCC
PROJECT
J-1538
100 MW
UTILITY
SCHEMATIC

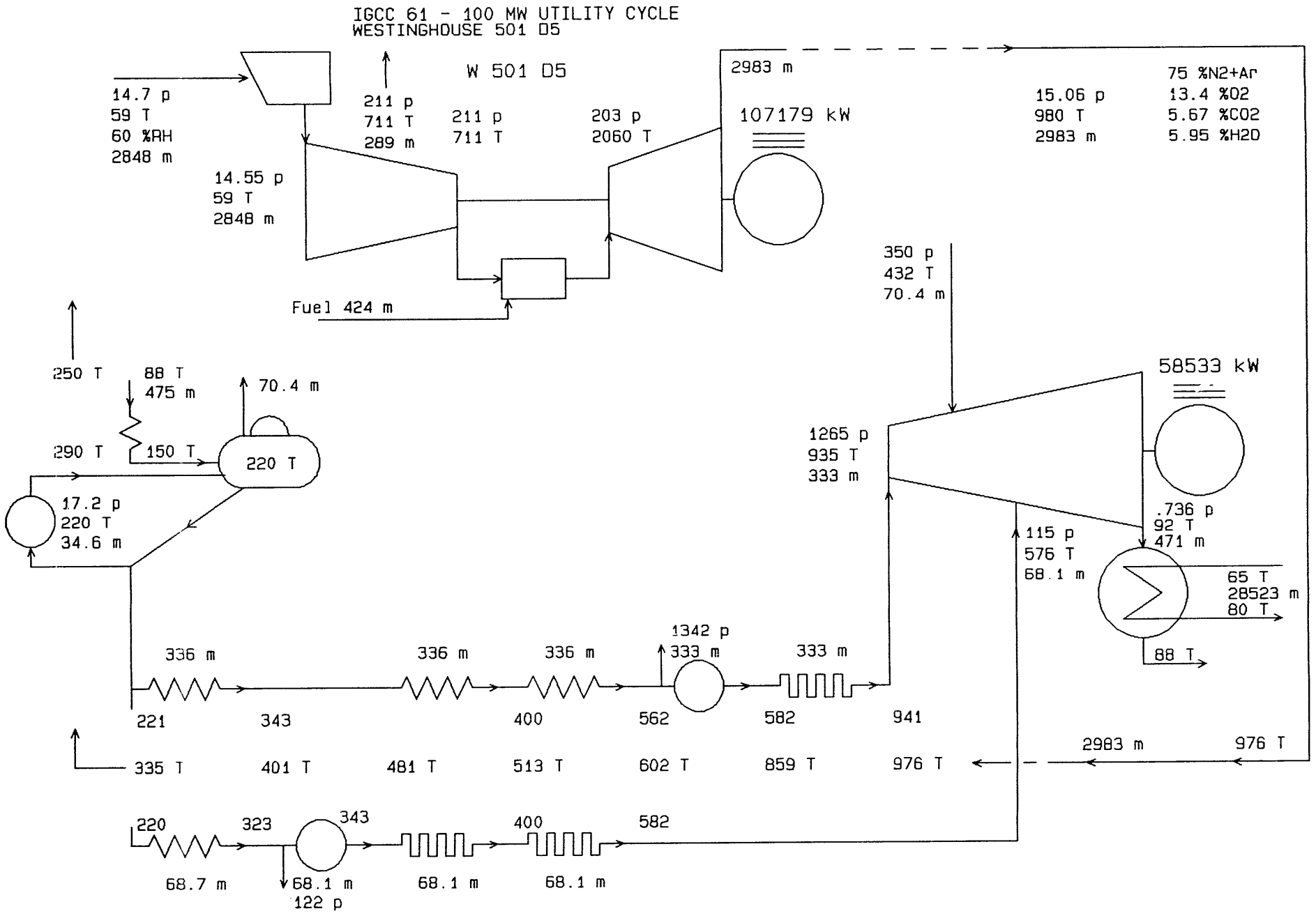

GTPRO 3.31 Michael Brown 10-15-1990 11:46:55
p psia, T F, m kpph

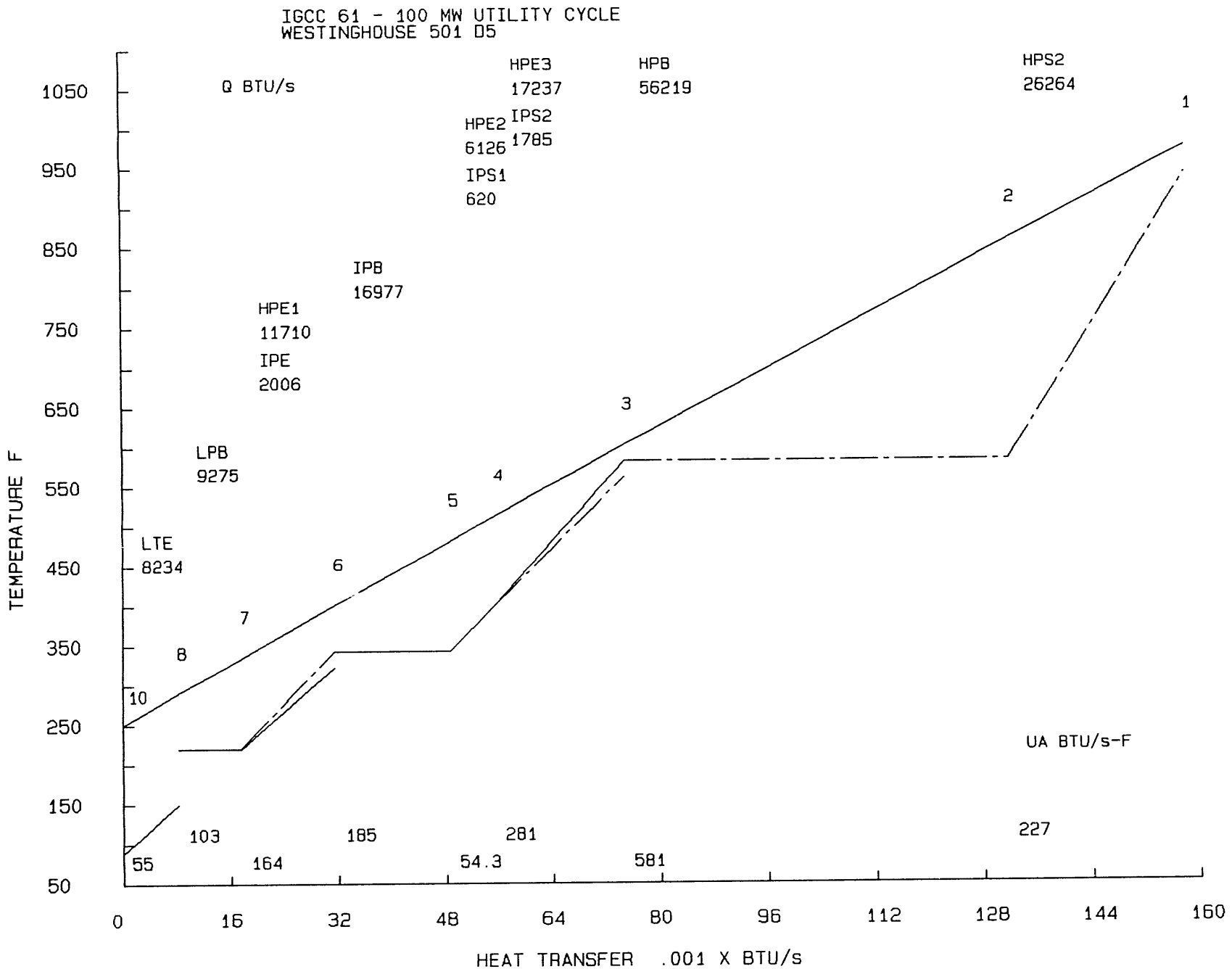

GTPRO 3.31 Michael Brown 10-15-1990 11:46:55

GTPRO 3.31 Michael Brown 10-15-1990 11:38:14
IGCC 61 - 100 MW UTILITY CYCLE
WESTINGHOUSE 501 D5

ESTIMATED G.T. SITE PERFORMANCE

Fuel=Fuel G.T. @ 100 % rating, XIGV= 0
Site ambient conditions: 14.7 psia, 59 F, 60 % RH
Inlet loss= 4 inch H2O, exhaust loss= 10 inch H2O
Evap. inlet cooler to 0 % RH.

G.T. DEVIATION FROM NOMINAL, CLEAN ENGINE

Compressor inlet airflow % reduction = 0
Compressor efficiency reduction % = 0
Turbine efficiency reduction % = 0
Maximum firing temperature excess over base load = 0 F
Combustor % pressure loss (0 means nominal value) = 0
Combustor inefficiency + heat loss % (0 means nominal value) = 0
Cooling air increase % (0 means nominal value) = 0
Process air bleed location (0 means none) = 1
Process air bleed % of inlet = 10.14

#	Model	PR	TIT F	TET F	Mair kpph	kWe	H.R.LHV BTU/kWh	Mex kpph	N2+Ar %	O2 %	CO2 %	H2O %
[illegible]	501 D5	14.5	2060	980	2848	107180	10688	2983	75.02	13.36	5.67	5.95

Fuel flow = 424 kpph
Fuel pressure reqd.= 285 psia, compressor power= 737 kWe
G.T. auxillary power = 534 kWe.

ESTIMATED G.T. CYCLE

STREAM	TEMP. F	PRESS. psia	MASSFLOW kpph	M.W.	MOLE COMPOSITION % N2+Ar	O2	CO2	H2O
Ambient air in	59	14.70	2848.11	28.75	78.22	20.74	0.03	1.01
Compr. inlet	59	14.55	2848.11	28.75	78.22	20.74	0.03	1.01
Turbine coolant	misc.		254.40					
Process air bld	711	211.27	288.80	28.75	78.22	20.74	0.03	1.01
Compr. disch.	711	211.27	2304.92	28.75	78.22	20.74	0.03	1.01
Turbine inlet	2060	202.82	2728.63	28.87	74.72	12.67	6.20	6.41
Turbine exhaust	980	15.06	2983.03	28.86	75.02	13.36	5.67	5.95

Compressor= 134299 Turbine= 243656 Mech. loss= 656 kW
Turbine coolant= 8.93 % compr in
GT specific power @ gen term= 37.6 kW per kpph
GT efficiency @ gen term= 29.38 % HHV = 31.93 % LHV

GAS TURBINE/GENERATOR HEAT BALANCE

Energy in = 356318 BTU/s

Inlet air Sensible	Inlet air Latent	Water Inj.	Steam Inj.	Fuel HHV
5209	5268	0	0	345842

Energy out = 358064 BTU/s

Incompl comb & carcass rad	GT Mech. Losses	Gearbox Loss	Generator Loss	Exhaust Sensible	Exhaust Latent	Electric Output	Proc Air
4168	417	0	1451	204011	32359	101592	14066

Zero enthalpy: dry gases & liquid water @ 32 F (273.15 K)
Heat Balance Error = In - Out =-1746 BTU/s =-.49 %

IGCC 61 - 100 MW UTILITY CYCLE
WESTINGHOUSE 501 D5
Type: 6 Subtype: 2 Induction

	p psia	T F	h BTU/lb	m kpph	UA BTU/s-F	Q BTU/s	A sq.ft
Cnd rtrn	0.74	87.57	55.58	471.271			
Makeup	17.72	80.00	48.02	4.009			
FW supl	17.72	87.51	55.51	475.279			
LTE				475.279	55	8234	25323
From LTE	17.20	150.00	117.88	475.279			
LPB				34.585	103	9275	43832
Water bleed				70.420			
Intd. FW	17.20	220.00	188.13	404.859			
HPFW	1423.77	221.13	193.48	336.128			
HPE1				336.128	143	11710	63605
6	1382.30	342.54	318.89	0.000			
HPE2				336.128	49	6126	21385
7	1362.17	400.10	384.50	0.000			
HPE3				336.128	248	17237	105740
8	1342.04	562.08	569.12	0.000			
Blwdn	1342.04	582.08	591.91	3.328			
HPB				332.800	581	56219	227045
9	1342.04	582.08	1177.03	0.000			
HPS1				332.800	0	0	0
10	1342.04	582.08	1177.03	0.000			
HPS2				332.800	227	26264	112202
11	1302.95	941.00	1461.14	0.000			
Into HPT	1265.00	935.00	1458.99	332.800			
bef addn	350.00	630.40	1330.20	332.800			
HPT addn	350.00	432.00	1204.98	70.420			
aft addn	350.00	590.01	1308.33	403.220			
HPT exit	115.00	389.92	1219.60	403.220			
IPFW	125.66	220.09	188.55	68.732			
IPE				68.732	21	2006	9471
1	122.00	322.54	293.60	0.000			
Blwdn	122.00	342.54	314.10	0.681			
IPB				68.051	185	16977	76156
2	122.00	342.54	1191.52	0.000			
IPS1				68.051	5	620	2634
3	122.00	400.10	1224.32	0.000			
IPS2				68.051	34	1785	17452
4	118.45	582.08	1318.77	0.000			
Into LPT	115.00	414.62	1233.49	471.271			
LPT exit	0.74	91.57	963.42	471.271			

STEAM TURBINE

	No. of steps	Exit Quality	Efficiency(%)	Work (kW)
To HPT additn	4	1.157		
To HPT exit	3	1.033	81.66	23045
To LPT exit	13	0.867	81.54	37299

Gross power = 60344 kW. Mech/Elect losses = 1810 kW.
Generator output = 58533 kWe. ST auxiliaries = 410 kWe
Boiler feedpumps = 598 kWe

CONDENSER

	P psia	T F	h BTU/lb	m kpph
LPT exit	0.7365	91.57	963.42	471.27
Saturation	0.7365	91.57		
Condensate well	0.7365	87.57	55.58	471.27
Cooling water in		65.00		28522.57
Cooling water out		80.00		28522.57

Number of passes= 1 UA= 6597 BTU/s-F Surface area = 32266 sq.ft
Tubes: OD = 1 in Length= 38.6 ft number= 3195
Cooling water: Velocity= 9 ft/s DP = 9.02 psia Pumps = 322 kWe.

STEAM CYCLE HEAT BALANCE

Energy in = 260500 BTU/s

GT Exhaust Sensible	GT Exhaust Latent	Duct Burner Fuel HHV	Makeup+Proc Return	Pump Work	External Steam
204011	32359	0	53	507	23571

Energy out = 260501 BTU/s

Heat Radiated	Blow down	Mech/Elec Losses	Stack Sens.	Stack Latent	Condnsr C.W.	Process Steam	GT Injec.	Proc. Water	Electric Output
2734	607	1716	45080	32359	118844	0	0	3680	55482

Zero enthalpy: dry gases & liquid water @ 32 F (273.15 K)
Heat Balance Error = In - Out =-1.03 BTU/s = 0 %

HRSG GAS-SIDE PROFILE

	Tg F	Tw F HP/IP	DT F HP/IP	Qg/UA F	DELTA P inch H2O	UA BTU/s-F	Q BTU/s	Vg ft/s	Tube Rows	Lngth ft
1	976.1	941.0	35.1							
				117.0	1.9	226.7	26526.7	57.2	7.4	3.1
	859.0	582.1	277.0							
2	859.0	582.1	277.0							
				97.8	3.3	580.7	56781.2	49.5	15.0	6.2
	602.1	582.1	20.0							
3	602.1	562.1	40.0							
3	602.1	582.1	20.0							
				68.3	1.5	281.3	19213.1	42.3	8.1	3.4
	513.0	400.1	112.9							
	513.0	400.1	112.9							
4	513.0	400.1	112.9							
4	513.0	400.1	112.9							
				125.4	0.3	54.3	6813.2	39.8	1.6	0.7
	481.2	342.5	138.7							
	481.2	342.5	138.7							
5	481.2	342.5	138.7							
				92.6	0.8	185.3	17147.1	37.4	5.0	2.1
	400.5	342.5	58.0							
6	400.5	342.5	58.0							
6	400.5	322.5	78.0							
				84.4	0.7	164.2	13852.5	34.4	4.8	2.0
	334.8	221.1	113.7							
	334.8	220.1	114.7							
7	334.8	220.0	114.8							
				90.6	0.4	103.4	9367.3	32.1	2.9	1.2
	290.1	220.0	70.1							
8	290.1	150.0	140.1							
				151.1	0.2	55.0	8316.7	30.3	1.7	0.7
	250.2	87.5	162.7							

Duct burner fuel= 0 kpph
Gas mole composition: 75 %N2+Ar 13.4 %O2 5.67 %CO2 5.95 %H2O .002 %SO2
Flue gas dew point = 97 F M.W.= 28.9

HRSG TOTALS	Economisers	Evaporators	Superheaters	TOTAL
Q BTU/s	45313	82471	28669	156453
UA BTU/s-F	516	869	265	1651
A sq.ft	225525	347033	132289	704846

Prime surface= 41001 fin surface= 663845 sq.ft. Averaged fin eff.= .727
HRSG frontal area = 1001 sq.ft. Gas mass flux= 5.91 kpph/sq.ft
HRSG length = 19.4 ft, 46.6 tube rows, 2403 ft of tubes per row.
2 in dia. tubes with serrated fins, staggered arrangement.
Fin thickness/dia.= .03 , height/dia.= .4 , spacing/dia.= .07
Tube transverse pitch/dia.= 2.5 , row longitudinal pitch/dia.= 2.5

W 501 D5

Water cooling

air to coal ratio	2.41	air pressure	211	Cp air	0.248
water coal ratio	0.147	air temperature	711	Cp water	1.000
air to water ratio	16.39	water temperature	80	Cp steam	0.455

	lb	wt %	mols	mol %	partial pressure		
air	16.39	94.25%	0.57	91.13%	192.27		
water	1.00	5.75%	0.06	8.87%	18.73	sat temp	224

Temperature of combined stream entering boost compressor

400.09 F sat pressure 247 psia Rel. Hum. 7.58%

Temperature of stream exiting compressor (85% comp eff)

Tf = Ti + (Ti/n*{(Pf/Pi)^((k-1)/k)-1})

where
Ti - inlet temperature - 400.09 F - 860.09 R
n - efficiency - 85.00%
k - ratio of specific heat @ constant pressure to specific
to specific heat @ constant volume 1.384
Pf - final pressure 350 psia
Pi - initial pressure 211 psia

Tf = 552.63 F

	A	B	C	D	E	F	G	H	I	J	K	L	M	N	O
1	Standardized IGCC Gasifier Utility Application														Reference Coal -
2	Mass & Energy Balance					W 501 D5			Plant		Full Load				Predicted Gasifier Ou
3	Stream No.			1		2		3			4			5	
4	Identification			AR Coal		Coal Fines		Sized Coal		CompAir@	2.41 A/C			Water @	0.26
5	From			Illinois #6		Sizer @	30%	Combined Streams		Aux Compr	&/or Booster Compr			Cooling Water	H2O/
6	To			Sizer		Briquetting		Gasifier			Gasifier			Gasifier	Coal
7	Gas	Mol Wt		lb/hr	wt %	lb/hr	wt %	lb/hr	wt %	lb/hr	lb/mol	wt %	mol%	lb/hr	
8															
9	CO	28.010								0	0.00	0.00	0.00		
10	H2	2.016								0	0.00	0.00	0.00		
11	CO2	44.010								137	0.01	0.05	0.03		
12	H2O	18.015								1,835	0.18	0.64	1.02	31,137	
13	CH4	16.042								0	0.00	0.00	0.00		
14	C2H6	30.068								0	0.00	0.00	0.00		
15	H2S	34.076								0	0.00	0.00	0.00		
16	COS	60.070								0	0.00	0.00	0.00		
17	N2	28.013								216,534	21.65	75.03	77.28		
18	Ar	39.948								3,791	0.38	1.31	0.95		
19	HCl	36.461								0	0.00	0.00	0.00		
20	HCN	27.026								0	0.00	0.00	0.00		
21	NH3	17.030								0	0.00	0.00	0.00		
22	CS2	76.131								0	0.00	0.00	0.00		
23	SO2	64.059								0	0.00	0.00	0.00		
24	NO	30.006								0	0.00	0.00	0.00		
25	O2	31.999								66,317	6.63	22.98	20.72		
26	NaCl	58.497								0	0.00	0.00	0.00		
27	KCl	74.596								0	0.00	0.00	0.00		
28	Total Gas (lb/hr)									288,614	28.86	100.00	100.00	31,137	
29															
30	Volumetric Flow Rates (STP 14.7 psia, 59F)														
31	(acfm)									5,177					
32	(scfm)									63,150					
33															
34	Heat (BTU/lb)													1306	
35	Cp (BTU/lb F)									0.249					
36	HHV (BTU/lb)			10,776		10,776		10,776		0					
37	LHV (BTU/lb)			10,239		10,239		10,260		0					
38	Sensible Heat above														
39	59 F Btu/lb steam			0		0		0		123					
40	Latent Heat of														
41	Water Btu/lb steam									7					
42															
43	Chemical Heat			1226.20		367.86		1277.95		0.00					
44	(LHV) MBtu/hr														
45	Sensible Heat			0.00		0.00		0.00		35.53					
46	above 59 F MBtu/hr														
47	Latent Heat			64.30		19.29		64.30		1.91					
48	of Water MBtu/hr														
49	TotalHeat(MBtu/hr)			1290.50		387.15		1342.25		37.44				40.73	
50				Number of Gasifiers for 85% Plant Availability @90% Gasifier Availability,										350	psia
51															
52	C	12.011		71,986	60.11%	21,596	60.11%	75,703	60.78%		37				
53	H	1.008		4,994	4.17%	1,498	4.17%	4,994	4.01%		204			3,460	
54	O	16.000		9,066	7.57%	2,720	7.57%	9,066	7.28%		68,048			27,677	
55	N	14.007		1,413	1.18%	424	1.18%	1,413	1.13%		216,534			31,137	Total
56	S	32.060		3,449	2.88%	1,035	2.88%	3,449	2.77%		284,823	Total			
57	CL2	35.500		0	0.00%	0	0.00%	0	0.00%		-				
58	H2O	18.016		16,886	14.10%	5,066	14.10%	16,886	13.56%						
59	ZnFe2O4														
60	ZnS														
61	FeS														
62	Fe2O3														
63	ZnO														
64	ASH			11,976	10.00%	3,593	10.00%	13,049	10.48%						
65	Total Solids			119,757	100.01%	35,927	100.01%	124,559	100.00%						
66	Total Flow (pph)			119,757 •		35,927		124,559		288,614				31,137	
67															
68	Total Flow (ppc)			33.27		9.98		34.60		80.17				8.65	
69	Pressure (psia)			14.7		14.7		14.7		350 •				350 •	
70	Temperature (F)			59		59		59		553 •				553 •	

O	P	Q	R	S	T	U	V	W	X	Y	Z	AA	AB	AC	AD
al -	Illinois #6								J-1538		DE-AC21-89MC26291				1
sifier Output			10/16/90					Revision 7							2
	6	Uncomb	7		8		9				10	55 scf/lb of coal			3
0.26	Ash	Carbon	Fines (Char)		Tar		Dust(per RTI dia)		Miscellaneous		Hot Gas with Tars				4
ater H2O/	Gasifier	2.69%	Gasifier @	4.00%	Gasifier @	6.00%	Final Cyclone		Gasifier Heat		Gasifier	N2 in coal			5
r Coal	Ash Silo		Briquetting		HGCU		Reclaim		Losses		HGCU	to NH3 Conv		90.1%	6
	lb/hr	wt %	lb/hr	wt %	lb/hr	wt %	lb/hr	wt %			lb/hr	lb/mol	wt %	mol %	7
															8
											111,763	6.39	26.26	22.82	9
											5,028	0.29	1.18	14.26	10
											50,015	2.86	11.75	6.50	11
31,137											21,730	1.24	5.11	6.90	12
											9,131	0.52	2.15	3.26	13
											1,811	0.10	0.43	0.34	14
											3,142	0.18	0.74	0.53	15
											924	0.05	0.22	0.09	16
											216,674	12.39	50.91	44.24	17
											3,791	0.22	0.89	0.54	18
											0	0.00	0.00	0.00	19
											147	0.01	0.03	0.03	20
											1,453	0.08	0.34	0.49	21
											0	0.00	0.00	0.00	22
											0	0.00	0.00	0.00	23
											0	0.00	0.00	0.00	24
											0	0.00	0.00	0.00	25
											0	0.00	0.00	0.00	26
											0	0.00	0.00	0.00	27
31,137											425,608	24.34	100.00	100.00	28
															29
											425,608				30
											17,262				31
											110,437				32
															33
1308															34
	0.260		0.260		0.26		0.260				0.329				35
	0		10,936		17,329		0				2,588.8				36
	0		10,936		16,571		0				2,375.0				37
															38
	154		276		276		323				349				39
															40
	0		0		749		0				214				41
															42
	28.08		52.39		119.07		0.00				1010.81				43
															44
	2.14		1.32		1.98		0.19		71.5 Water/steam jacket		148.40				45
															46
	0.00		0.00		5.38		0.00		16.7 Traversing Stirrer		91.03	Gas HHV=	189	Btu/scf	47
												Estimated=	555	Btu/lb	48
40.73	30.22		53.71		126.44		0.19		88.2 Total		1250.24	Calculated=	560	Btu/lb	49
psia & 17 tph (typical) Coal each:				4.9		Unit Output (MWn)			153.9 MWn			BulkGas=	4.01%	H2O	50
												Calc Comb Temp (F)		2080	51
	1,936	13.92	3,717	77.60%	6,323	88.00%					70,087	70,086	0.00%		52
3,460			0	0.00%	575	8.00%					10,534	10,53[illegible]	0.00%		53
27,677			0	0.00%	144	2.00%					119,800	119,801	0.00%		54
31,137 Total			0	0.00%	72	1.00%					217,947	217,947	0.00%		55
	0	0.00	0	0.00%	72	1.00%					3,449	3,450	-0.02%		56
			0	0.00%						Sub-Totals	421,817	421,817	0.00%		57
			0	0.00%							Sum of Streams	Sum of Gas Constituents	Mass Unbalance		58
							543	90							59
							12	2			balance check				60
							36	6			Cycle Efficiency(g) = 43.83%				61
							0	0			Cycle Efficiency (n) = 46.70%				62
							12	2							63
	11,976	86.08	1,073	22.40%			0	0							64
	13,912	100	4,790	100.00%	7,185	100.00%	604	100							65
31,137	13,912		4,790		7,185		604				425,608				66
															67
8.65	3.86		1.33		2.00		0.17				118.22				68
350 *	14.7		350 *		350 *		286				286				69
553 *	650		1120		1120		1300				1120				70

	AE	AF	AG	AH	AI	AJ	AK	AL	AM	AN	AO	AP	AQ	AR
1	**Standardized IGCC Gasifier Utility Application**											**Reference Coal - Ill**		
2	**Mass & Energy Balance**			**W 501 D5**			**Plant**					**Predicted Gasifier Out**		
3	Stream No.		11				12				13	14		
4	Identification		Air				Bleed Air				Bleed Air	Compressor Discharge		
5	From		Atmosphere				Compressor				for	Compressor		
6	To		Gas Turbine Compressor				Booster Compressor Cooler				Coolant	Combustor		
7	Gas	Mol Wt	lb/hr	lb/mol	wt %	mol %	lb/hr	lb/mol	wt %	mol %	lb/hr	lb/hr	lb/mol	wt %
8														
9	CO	28.010	0	0.00	0.00	0.00	0	0.00	0.00	0.00	0	0	0.00	0.00
10	H2	2.016	0	0.00	0.00	0.00	0	0.00	0.00	0.00	0	0	0.00	0.00
11	CO2	44.010	1,349	0.01	0.05	0.03	137	0.01	0.05	0.03	120	1,092	0.01	0.05
12	H2O	18.015	18,108	0.18	0.64	1.02	1,835	0.18	0.64	1.02	1,618	14,655	0.18	0.64
13	CH4	16.042	0	0.00	0.00	0.00	0	0.00	0.00	0.00	0	0	0.00	0.00
14	C2H6	30.068	0	0.00	0.00	0.00	0	0.00	0.00	0.00	0	0	0.00	0.00
15	H2S	34.076	0	0.00	0.00	0.00	0	0.00	0.00	0.00	0	0	0.00	0.00
16	COS	60.070	0	0.00	0.00	0.00	0	0.00	0.00	0.00	0	0	0.00	0.00
17	N2	28.013	2,136,804	21.65	75.03	77.28	216,534	21.65	75.03	77.28	190,874	1,729,396	21.65	75.03
18	Ar	39.948	37,409	0.38	1.31	0.95	3,791	0.38	1.31	0.95	3,342	30,277	0.38	1.31
19	HCl	36.461	0	0.00	0.00	0.00	0	0.00	0.00	0.00	0	0	0.00	0.00
20	HCN	27.026	0	0.00	0.00	0.00	0	0.00	0.00	0.00	0	0	0.00	0.00
21	NH3	17.030	0	0.00	0.00	0.00	0	0.00	0.00	0.00	0	0	0.00	0.00
22	CS2	76.131	0	0.00	0.00	0.00	0	0.00	0.00	0.00	0	0	0.00	0.00
23	SO2	64.059	0	0.00	0.00	0.00	0	0.00	0.00	0.00	0	0	0.00	0.00
24	NO	30.006	0	0.00	0.00	0.00	0	0.00	0.00	0.00	0	0	0.00	0.00
25	O2	31.999	654,434	6.63	22.98	20.72	66,317	6.63	22.98	20.72	58,459	529,658	6.63	22.98
26	NaCl	58.497	0	0.00	0.00	0.00	0	0.00	0.00	0.00	0	0	0.00	0.00
27	KCl	74.596	0	0.00	0.00	0.00	0	0.00	0.00	0.00	0	0	0.00	0.00
28	Total Gas (lb/hr)		2,848,104	28.86	100.00	100.00	288,614	28.86	100.00	100.00	254,412	2,305,078	28.86	100.00
29														
30	Volumetric Flow Rates (STP 14.7 psia, 59F)													
31	(acfm)		623,179				9,912					79,168		
32	(scfm)		623,179				63,150				56,066	304,363		
33														
34	hgAdiabHeat(BTU/lb)													
35	Cp (BTU/lb F)		0.240				0.255					0.255		
36	HHV (BTU/lb)		0.0				0.0					0.0		
37	LHV (BTU/lb)		0.0				0.0					0.0		
38	Sensible Heat													
39	above 59 F Btu/lb		0				166					166		
40	Latent Heat													
41	of Water Btu/lb		7				7					7		
42														
43	Chemical Heat		0.00				0.00					0.00		
44	(LHV) MBtu/hr													
45	Sensible Heat		0.00				47.90					382.59		
46	above 59 F MBtu/hr													
47	Latent Heat		18.83				1.91					15.24		
48	of Water MBtu/hr													
49	TotalHeat(MBtu/hr)		18.83				49.81					397.83		
50												Parasitic Load		11.83 MW
51														
52	C	12.011		368				37			33		298	298
53	H	1.008		2,012				204			180		1,628	1,628
54	O	16.000		671,511				68,048			59,984		543,479	543,479
55	N	14.007		2,136,804				216,534			190,874		1,729,396	1,729,396
56	S	32.060		0				0			0		0	0
57	CL2	35.500		2,810,695	sub-totals			284,823	sub-totals		251,070	sub-totals	2,274,801	2,274,801
58	H2O	18.016												balance check
59	ZnFe2O4													
60	ZnS													
61	FeS													
62	Fe2O3													
63	ZnO													
64	ASH													
65	Total Solids													
66	Total Flow (pph)		2,848,104				288,614				254,412	2,305,078		
67														
68	Total Flow (pps)		791.14 *				80.17			*	70.67	640.30		
69	Pressure (psia)		14.7 *				211 *					211		
70	Temperature (F)		59 *				711 *					711		

AR	AS	AT	AU	AV	AW	AX	AY	AZ	BA	BB	BC	BD	BE	BF	BG
l - Illinois #6								J-1538			DE-AC21-89MC26291				1
lfier Output				Revision 7										10/16/90	2
		15				16					17				3
r Discharge		Fuel			%H2S	Inlet Gas		Thrml NO (ppmvd)		25	Exhaust Gas				4
r		HGCU			Removed	GT Combustor		*Rich/Lean Red. F		85%	Gas Turbine				5
		GT Combustor			99.0%	GT Expander									6
wt %	mol %	lb/hr	mol/hr	wt %	mol %	lb/hr	lb/mol	mols	wt %	mol%	lb/hr	mols/hr	wt %	mol%	7
															8
0.00	0.00	111,763	3,990	26.38	22.84	0	0.00	0.00	0.00	0.00	0	0.00	0.00	0.00	9
0.00	0.00	4,966	2,463	1.17	14.10	0	0.00	0.00	0.00	0.00	0	0.00	0.00	0.00	10
0.05	0.03	50,015	1,136	11.80	6.51	257,404	2.73	0.0021	9.43	6.21	257,524	5851.49	8.63	5.68	11
0.64	1.02	23,922	1,328	5.65	7.60	109,448	1.16	0.00	4.01	6.45	111,066	6165.19	3.72	5.99	12
0.00	0.00	9,131	569	2.16	3.26	0	0.00	0.00	0.00	0.00	0	0.00	0.00	0.00	13
0.00	0.00	1,811	60	0.43	0.34	0	0.00	0.00	0.00	0.00	0	0.00	0.00	0.00	14
0.00	0.00	31	1	0.01	0.01	0	0.00	0.00	0.00	0.00	0	0.00	0.00	0.00	15
0.00	0.00	9	0	0.00	0.00	0	0.00	0.00	0.00	0.00	0	0.00	0.00	0.00	16
75.00	77.28	216,674	7,735	51.14	44.28	1,947,079	20.67	0.0255	71.35	73.80	2,137,953	76320.04	71.67	74.10	17
1.31	0.95	3,791	95	0.89	0.54	34,067	0.36	0.00	1.25	0.91	37,409	936.44	1.25	0.91	18
0.00	0.00	0	0	0.00	0.00	0	0.00	0.00	0.00	0.00	0	0.00	0.00	0.00	19
0.00	0.00	147	5	0.03	0.03	0	0.00	0.00	0.00	0.00	0	0.00	0.00	0.00	20
0.00	0.00	1,453	85	0.34	0.49	0	0.00	0.00	0.00	0.00	0	0.00	0.00	0.00	21
0.00	0.00	0	0	0.00	0.00	0	0.00	0.00	0.00	0.00	0	0.00	0.00	0.00	22
0.00	0.00	0	0	0.00	0.00	69	0.0007	0.0000	0.0025	0.0011	69	1.08	0.00	0.00	23
0.00	0.00	0	0	0.00	0.00	563	0.0060	0.0000	0.0206	0.0199	563	18.77	0.02	0.02	24
22.98	20.72	0	0	0.00	0.00	380,163	4.04	0.0044	13.93	12.61	438,622	13707.36	14.70	13.31	25
0.00	0.00	0	0	0.00	0.00	0	0.00	0.00	0.00	0.00	0	0.00	0.00	0.00	26
0.00	0.00	0	0	0.00	0.00	0	0.00	0.00	0.00	0.00	0	0.00	0.00	0.00	27
100.00	100.00	423,713	17,469	100.00	100.00	2,728,791	28.97	0.0345	100.00	100.00	2,983,203	103000.37	100.00	100.00	28
						2,728,794 bal ck					2,983,206	bal ck			29
															30
		17,894				209,286					1,753,054				31
		110,291				594,644					650,312				32
															33
															34
		0.334				0.278					0.267				35
		2,548.9				0.0					0.0				36
		2,330.0				0.0					0				37
															38
		375				557					246				39
															40
		219				42					39				41
															42
		987.26				0.00					0.00				43
															44
		158.68				1520.15					734.83				45
															46
		92.73				113.83					115.51				47
															48
		1238.67				1633.98	1636.50 bal chk				850.34				49
11.83 MWg			Combustion Turbine Output			107.179 MWg					1.05 Turbine Compressor Surge Margin				50
															51
298	0.00%		69,903			70,201	70,201	0.00%			70,234	70,234	0.00%		52
1,628	0.00%		10,533			12,161	12,161	0.00%			12,341	12,341	0.00%		53
543,479	0.00%		121,506			664,985	664,988	0.00%			724,972	724,972	0.00%		54
1,729,396	0.00%		217,947			1,947,342	1,947,342	0.00%			2,138,216	2,138,216	0.00%		55
0	0.00%		34			34	34	0.10%			34	34	0.00%		56
2,274,801	0.00%		419,923	sub-total		2,694,724	2,694,727	0.00%	sub-total		2,945,797	2,945,797	0.00%	sub-total	57
lance check								balance check					balance check		58
															59
															60
															61
															62
															63
															64
															65
		423,713				2,728,791					2,983,203				66
															67
		117.70				758.00					828.67				68
		286.3				203 *					15.13				69
		1180				2,060 *					980 *				70

	BH	BI	BJ	BK	BL	BM	BN	BO	BP	BQ	BR	BS
1	**Standardized IGCC Gasifier Utility Application**						**Reference Coal -**			**Illinois #6**		
2	**Mass & Energy Balance**			**W 501 D5**			**Predicted Gasifier Output**					
3	Stream No.			18			19	Thrml NO (ppmvd)		25	20	21
4	Identification			Fuel for Supplementary Firing			Flue Gas		SCR Red F	80 %	Superheated Steam	Low Pressure Ste
5	From			Gasifier			HRSG		R/L Red F	85 %	HRSG	HRSG
6	To			HRSG			Stack		NOx Reburn F	0 %	Steam Turbine	Steam Turbin
7	Gas	Mol Wt	lb/hr	lb/mol	wt %	mol %	lb/hr	mols/hr	wt %	mol %	lb/hr	lb/hr
8												
9	CO	28.010	0	6.39	26.26	22.82	0	0.00	0.00	0.00		
10	H2	2.016	0	0.29	1.18	14.26	0	0.00	0.00	0.00		
11	CO2	44.010	0	2.86	11.75	6.50	257,524	5851.49	8.63	5.68		
12	H2O	18.015	0	1.24	5.11	6.90	111,066	6165.19	3.72	5.99		
13	CH4	16.042	0	0.52	2.15	3.26	0	0.00	0.00	0.00		
14	C2H6	30.068	0	0.10	0.43	0.34	0	0.00	0.00	0.00		
15	H2S	34.076	0	0.18	0.74	0.53	0	0.00	0.00	0.00		
16	COS	60.070	0	0.05	0.22	0.09	0	0.00	0.00	0.00		
17	N2	28.013	0	12.39	50.91	44.24	2,137,953	76320.04	71.68	74.11		
18	Ar	39.948	0	0.22	0.89	0.54	37,409	936.44	1.25	0.91		
19	HCl	36.461	0	0.00	0.00	0.00	0	0.00	0.00	0.00		
20	HCN	27.026	0	0.01	0.03	0.03	0	0.00	0.00	0.00		
21	NH3	17.030	0	0.08	0.34	0.49	0	0.00	0.00	0.00		
22	CS2	76.131	0	0.00	0.00	0.00	0	0.00	0.00	0.00	Stack Emissions (lb/MBtu)	
23	SO2	64.059	0	0.00	0.00	0.00	69	1.08	0.00	0.00	0.053	
24	NO	30.006	0	0.00	0.00	0.00	113	3.75	0.00	0.00	0.09	
25	O2	31.999	0	0.00	0.00	0.00	438,622	13707.36	14.71	13.31		
26	NaCl	58.497	0	0.00	0.00	0.00	0	0.00	0.00	0.00		
27	KCl	74.596	0	0.00	0.00	0.00	0	0.00	0.00	0.00		
28	Total Gas (lb/hr)		0	24.34	100.00	100.00	2,982,752	102985.35	100.00	100.00		
29							2,982,756	bal chk				
30	Volumetric Flow Rates (STP 14.7 psia, 59F)											
31	(acfm)		0				889,507					
32	(scfm)		0				650,217					
33												
34	Heat (BTU/lb)										1459.5	
35	Cp (BTU/lb F)		0.334				0.248					
36	HHV (BTU/lb)		2548.9				0.0					
37	LHV (BTU/lb)		2330.0				0					
38	Sensible Heat above											
39	59 F Btu/lb steam		0				47					
40	Latent Heat of											
41	Water Btu/lb steam		0				39					
42												
43	Chemical Heat		0.00				0.00					
44	(LHV) MBtu/hr											
45	Sensible Heat		0.00				141.03					
46	above 59 F MBtu/hr											
47	Latent Heat		0.00				115.51					
48	of Water MBtu/hr											
49	TotalHeat(MBtu/hr)		0.00				256.54				485.70	
50											HRSG Turbine C	
51												
52	C	12.011		0			70,234	70,234	0.00%			
53	H	1.008		0			12,341	12,341	0.00%			
54	O	16.000		0			724,732	724,732	0.00%			
55	N	14.007		0			2,138,006	2,138,006	0.00%			
56	S	32.060		0			34	34	0.00%			
57	CL2	35.500		0	sub-total		2,945,347	2,945,347	0.00%	sub-total		
58	H2O	18.016										
59	ZnFe2O4											
60	ZnS											
61	FeS											
62	Fe2O3											
63	ZnO											
64	ASH											
65	Total Solids											
66	Total Flow (pph)		0				2,983,203				332,784	
67												
68	Total Flow (ppm)		0 *				828.67				92.44	
69	Pressure (psia)		286.3				14.7				1265	
70	Temperature (F)		1180				290 *				935	

BS	BT	BU	BV	BW
	J-1538	DE-AC21-89MC26291		1
	Revision 7		10/16/90	2
21	22	23	24	3
Pressure Steam	Make Up Water	Sat. Steam	Process Stm	4
HRSG	WaterTreatment	Gasifier	Stm Turbine	5
eam Turbine	HRSG	Steam Turbine	Process Facility	6
lb/hr	lb/hr	lb/hr	lb/hr	7
				8
				9
				10
				11
				12
				13
				14
				15
				16
				17
				18
				19
				20
				21
				22
				23
				24
				25
				26
				27
				28
				29
				30
				31
				32
				33
1242	48	1204		34
				35
				36
				37
				38
				39
				40
				41
				42
				43
				44
				45
				46
				47
				48
84.52	1.69	71.54		49
Turbine Output	58.5	MWg		50
				51
				52
				53
				54
				55
				56
				57
				58
				59
				60
				61
				62
				63
				64
				65
68,051	35,147	70,418	0	66
				67
18.90	9.76	19.56	0.00	68
115	15	330	250	69
432	80	432	420	70

	BX	BY	BZ	CA	CB	CC	CD	CE	CF	CG	CH	CI
1	Standardized IGCC Gasifier Utility Application								Reference Coal -			Illinois #6
2	Mass & Energy Balance				W 501 D5				Predicted Gasifier Output			
3	Stream No.		25		26					27		27a
4	Identification		Regen Recycle Loop		Conc SO2 Bleed					Elemental Sulfur		Elemental Sulfur
5	From		Recycle Blower		Regen Loop					Resox Process		DSRP
6	To		Regenerator		SRP					Marketable Byproduct		Marketable Byprod
7	Gas	Mol Wt	lb/hr	wt%	lb/hr	lbs/mol	mols/hr	wt%	mol%	lb/hr	wt%	lb/hr
8												
9	CO	28.010			0	0.00	0.00	0.00	0.00			
10	H2	2.016			0	0.00	0.00	0.00	0.00			
11	CO2	44.010	174	0.05	14	0.02	0.33	0.05	0.04			
12	H2O	18.015	2,169	0.62	181	0.20	10.03	0.62	1.11			
13	CH4	16.042			0	0.00	0.00	0.00	0.00			
14	C2H6	30.068			0	0.00	0.00	0.00	0.00			
15	H2S	34.076			0	0.00	0.00	0.00	0.00			
16	COS	60.070			0	0.00	0.00	0.00	0.00			
17	N2	28.013	262,379	74.87	21,865	24.10	780.53	74.87	86.02			
18	Ar	39.948	0	0.00	0	0.00	0.00	0.00	0.00			
19	HCl	36.461			0	0.00	0.00	0.00	0.00			
20	HCN	27.026			0	0.00	0.00	0.00	0.00			
21	NH3	17.030			0	0.00	0.00	0.00	0.00			
22	CS2	76.131			0	0.00	0.00	0.00	0.00			
23	SO2	64.059	81,916	23.37	6,826	7.52	106.56	23.37	11.74			
24	NO	30.006			0	0.00	0.00	0.00	0.00			
25	O2	31.999	3,806	1.09	317	0.35	9.91	1.09	1.09			
26	NaCl	58.497			0	0.00	0.00	0.00	0.00			
27	KCl	74.596			0	0.00	0.00	0.00	0.00			
28	Total Gas (lb/hr)		350,443	100.00	29,204	32.19	907	100.00	100.00			
29												
30	Volumetric Flow Rates		(STP 14,7 psia, 59 F)									
31	(acfm)		12,319		971							
32	(scfm)		68,746		5,729							
33												
34	Heat (BTU/lb)											
35	Cp (BTU/lb F)		0.240		0.240					0.000		
36	HHV (BTU/lb)											
37	LHV (BTU/lb)											
38	Sensible Heat above											
39	59 F Btu/lb steam											
40	Latent Heat of											
41	Water Btu/lb steam											
42												
43	Chemical Heat									13.58		
44	(LHV) MBtu/hr											
45	Sensible Heat		112.79		8.70					0.00		
46	above 59 F MBtu/hr											
47	Latent Heat		2.26		0.19					0.00		
48	of Water MBtu/hr											
49	TotalHeat(MBtu/hr)		115.04		8.89					13.58		
50												
51												
52	C	12.011										
53	H	1.008										
54	O	16.000										
55	N	14.007										
56	S	32.060								3,413		
57	CL2	35.500										
58	H2O	18.016										
59	ZnFe2O4											
60	ZnS											
61	FeS											
62	Fe2O3											
63	ZnO											
64	ASH				0.00			0				
65	Total Solids											
66	Total Flow (pph)		350,443		29,204					3,413		
67												
68	Total Flow (pps)		97.35		8.11					0.95		
69	Pressure (psia)		294		294					15		
70	Temperature (F)		1400		1300					284		

CI	CJ	CK	CL	CM
Illinois #6	J-1538	DE-AC21-89MC26291		1
	Revision 7		10/16/90	2
27a	27b	28		3
Elemental Sulfur	Sulfur Dioxide	Ash		4
DSRP	SO2 Recovery Unit	SO2 Reductor		5
Marketable Byproduct	Marketable Byproduct	Disposal		6
lb/hr	lb/hr	lb/hr	wt%	7
				8
				9
				10
				11
				12
				13
				14
				15
				16
				17
				18
				19
				20
				21
				22
				23
				24
				25
				26
				27
				28
				29
				30
				31
				32
				33
				34
0.000	0.000			35
				36
				37
				38
		154	0	39
				40
				41
				42
13.58	13.58	4.91	0	43
				44
0.00	0.00	0.00	0	45
				46
0.00	0.00	0.00	0	47
				48
13.58	13.58	4.91	0.4	49
				50
				51
		338	3	52
				53
				54
				55
3,413	3,413			56
				57
				58
				59
				60
				61
				62
				63
		11,976	97	64
		12,314	100	65
3,413	6,826	12,314	100	66
				67
0.95	1.90	3.42		68
15	100	15		69
190	59	28		70

100 MW Utility Cycle
General Electric 7111 EA

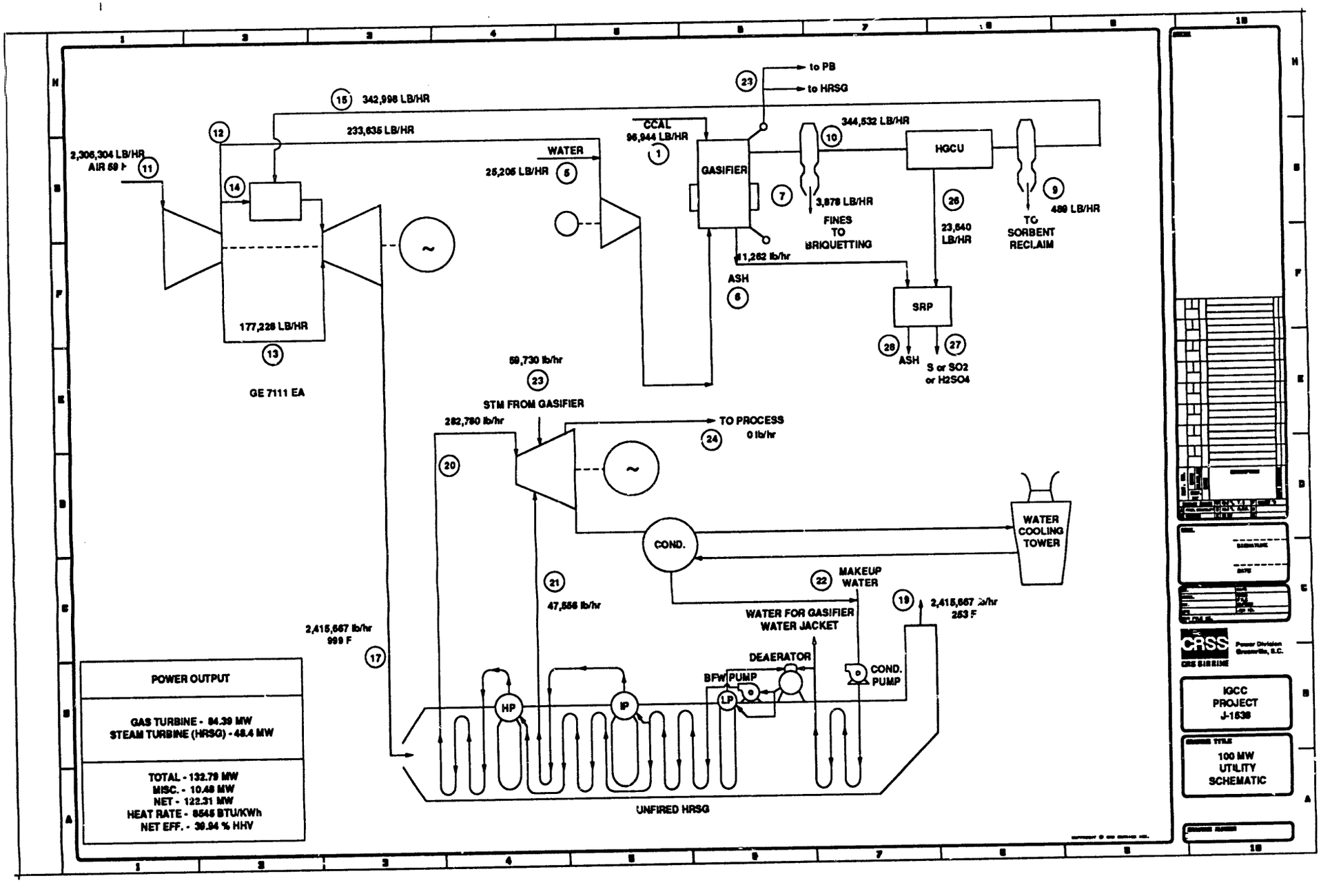
342,998 LB/HR
233,635 LB/HR
2,306,304 LB/HR
AIR 59 F
WATER
25,205 LB/HR
CCAL
96,944 LB/HR
GASIFIER
to PB
to HRSG
344,532 LB/HR
HGCU
3,878 LB/HR
FINES
TO
BRIQUETTING
23,640
LB/HR
489 LB/HR
TO
SORBENT
RECLAIM
11,262 lb/hr
ASH
SRP
ASH
S or SO2
or H2SO4
177,228 LB/HR
GE 7111 EA
59,730 lb/hr
STM FROM GASIFIER
282,780 lb/hr
TO PROCESS
0 lb/hr
COND.
WATER
COOLING
TOWER
MAKEUP
WATER
47,556 lb/hr
WATER FOR GASIFIER
WATER JACKET
2,415,667 lb/hr
253 F
2,415,667 lb/hr
999 F
DEAERATOR
BFW PUMP
COND.
PUMP
HP
IP
LP
UNFIRED HRSG
POWER OUTPUT
GAS TURBINE - 84.39 MW
STEAM TURBINE (HRSG) - 48.4 MW
TOTAL - 132.79 MW
MISC. - 10.48 MW
NET - 122.31 MW
HEAT RATE - 8545 BTU/KWh
NET EFF. - 39.94 % HHV
CRSS
IGCC
PROJECT
J-1638
100 MW
UTILITY
SCHEMATIC

IGCC 59 - 100 MW UTILITY CYCLE
GENERAL ELECTRIC 7111 EA

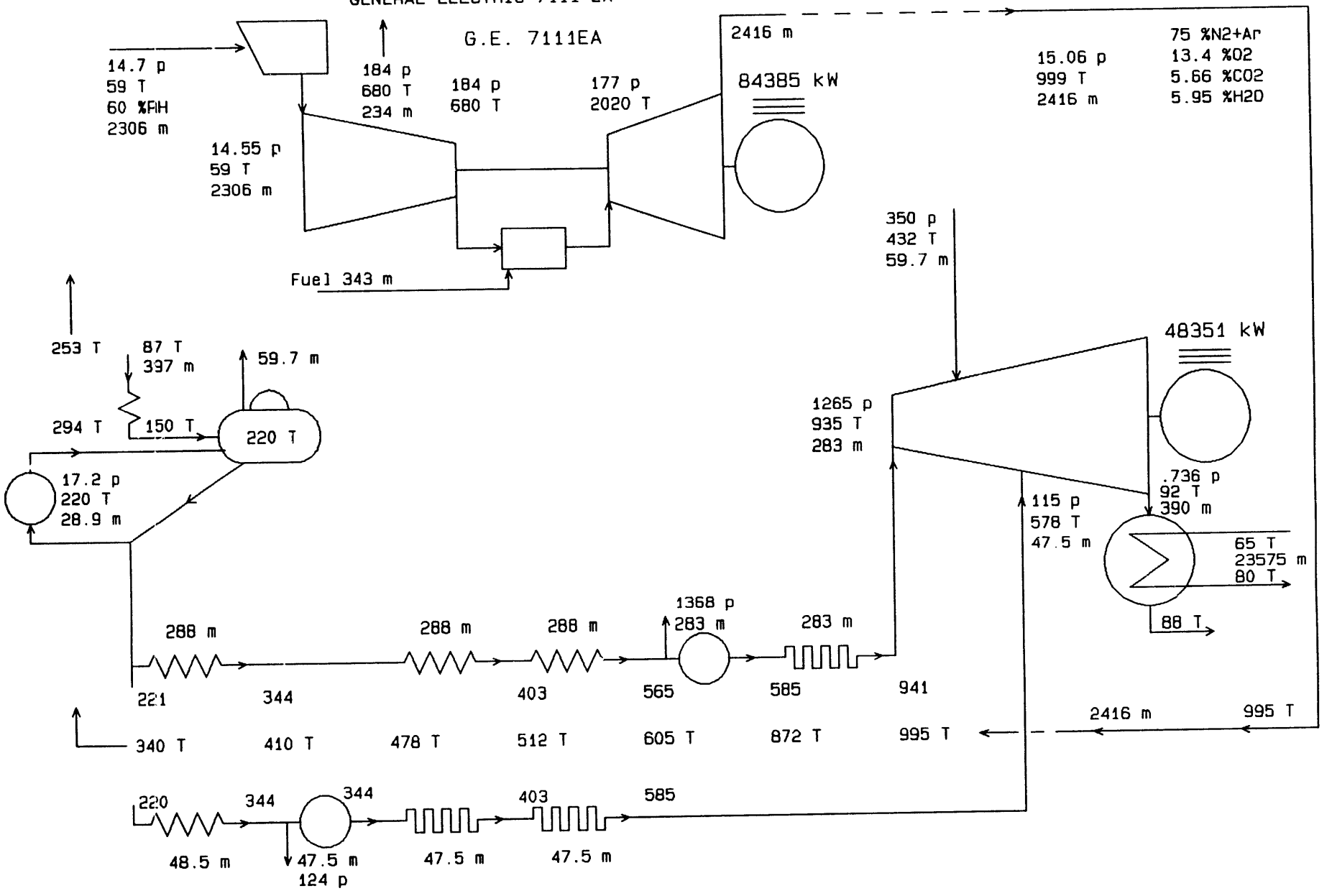

GTPRO 3.31 Michael Brown 10-15-1990 13:16:57
p psia, T F, m kpph

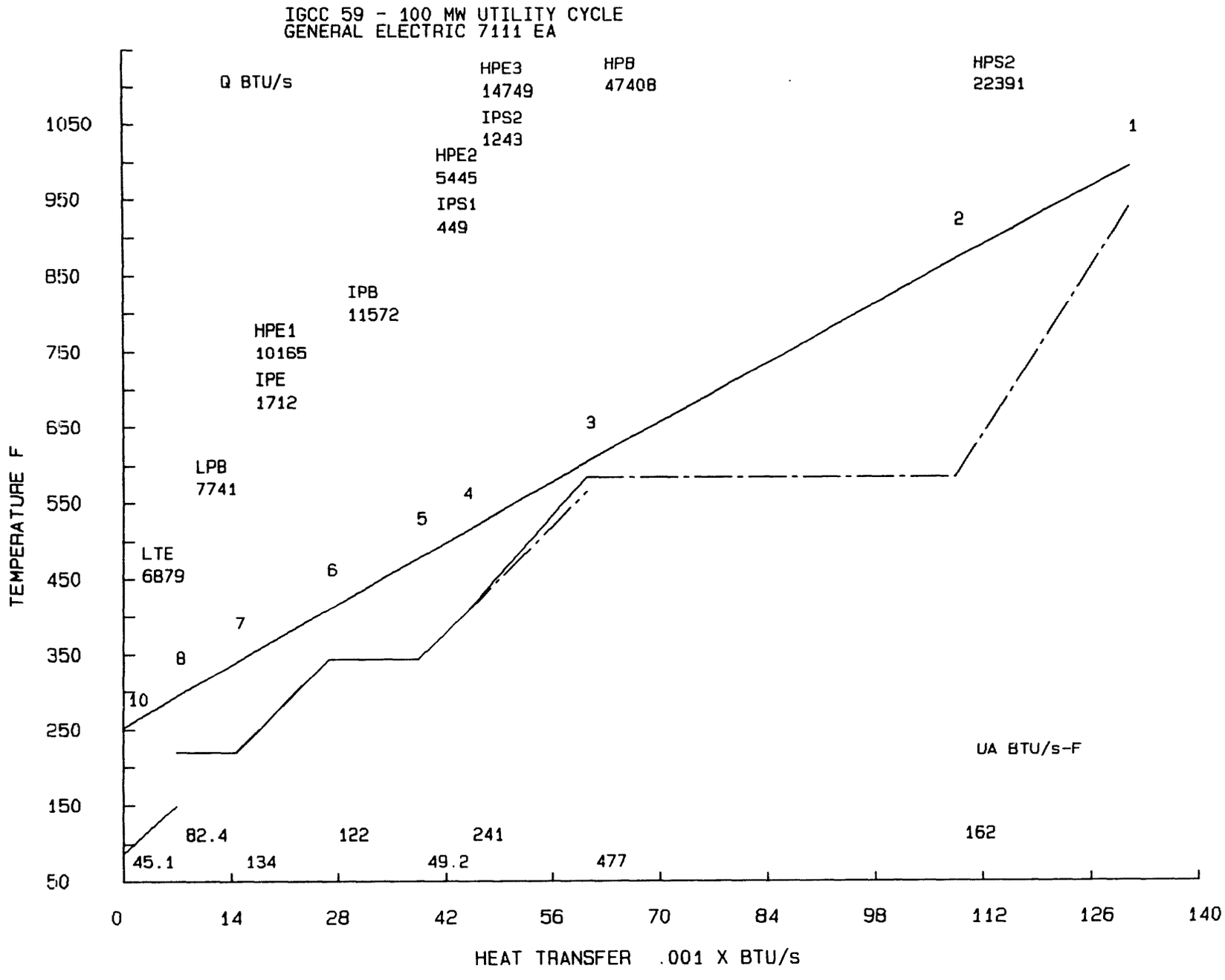

GTPRO 3.31 Michael Brown 10-15-1990 13:16:57

GTPRO 3.31 Michael Brown 10-15-1990 13:16:33
IGCC 59 - 100 MW UTILITY CYCLE
GENERAL ELECTRIC 7111 EA

ESTIMATED G.T. SITE PERFORMANCE

Fuel=Fuel G.T. @ 100 % rating, XIGV= 0
Site ambient conditions: 14.7 psia, 59 F, 60 % RH
Inlet loss= 4 inch H2O, exhaust loss= 10 inch H2O
Evap. inlet cooler to 0 % RH.

G.T. DEVIATION FROM NOMINAL, CLEAN ENGINE

Compressor inlet airflow % reduction = 0
Compressor efficiency reduction % = 0
Turbine efficiency reduction % = 0
Maximum firing temperature excess over base load = 0 F
Combustor % pressure loss (0 means nominal value) = 0
Combustor inefficiency + heat loss % (0 means nominal value) = 0
Cooling air increase % (0 means nominal value) = 0
Process air bleed location (0 means none) = 1
Process air bleed % of inlet = 10.13

#	Model	PR	TIT F	TET F	Mair kpph	kWe	H.R.LHV BTU/kWh	Mex kpph	N2+Ar %	O2 %	CO2 %	H2O %
	G.E. 7111EA	12.7	2020	999	2306	84385	10986	2416	75.02	13.37	5.66	5.95

Fuel flow = 343 kpph
G.T. auxillary power = 423 kWe.

ESTIMATED G.T. CYCLE

STREAM	TEMP. F	PRESS. psia	MASSFLOW kpph	M.W.	MOLE COMPOSITION % N2+Ar	O2	CO2	H2O
Ambient air in	59	14.70	2306.29	28.75	78.22	20.74	0.03	1.01
Compr. inlet	59	14.55	2306.29	28.75	78.22	20.74	0.03	1.01
Turbine coolant	misc.		177.22					
Process air bld	680	184.42	233.63	28.75	78.22	20.74	0.03	1.01
Compr. disch.	680	184.42	1895.45	28.75	78.22	20.74	0.03	1.01
Turbine inlet	2020	177.04	2238.33	28.87	74.77	12.78	6.11	6.34
Turbine exhaust	999	15.06	2415.55	28.86	75.02	13.37	5.66	5.95

Compressor= 103510 Turbine= 189871 Mech. loss= 691 kW
Turbine coolant= 7.68 % compr in
GT specific power @ gen term= 36.6 kW per kpph
GT efficiency @ gen term= 28.58 % HHV = 31.06 % LHV

GAS TURBINE/GENERATOR HEAT BALANCE

Energy in = 288349 BTU/s

Inlet air Sensible	Inlet air Latent	Water Inj.	Steam Inj.	Fuel HHV
4218	4265	0	0	279866

Energy out = 288423 BTU/s

Incompl comb & carcass rad	GT Mech. Losses	Gearbox Loss	Generator Loss	Exhaust Sensible	Exhaust Latent	Electric Output	Proc Air
1030	439	0	1228	168691	26189	79986	10862

Zero enthalpy: dry gases & liquid water @ 32 F (273.15 K)
Heat Balance Error = In - Out =-74.1 BTU/s =-.026 %

GTPRO 3.31 Michael Brown 10-15-1990 13:16:38 Steam cycle p.1
IGCC 59 - 100 MW UTILITY CYCLE
GENERAL ELECTRIC 7111 EA
Type: 6 Subtype: 2 Induction

	P psia	T F	h BTU/lb	m kpph	UA BTU/s-F	Q BTU/s	A sq.ft
Cnd rtrn	0.74	87.57	55.58	390.061			
Makeup	17.89	80.00	48.02	6.607			
FW supl	17.89	87.45	55.45	396.668			
LTE				396.668	45	6879	20636
from LTE	17.20	150.00	117.88	396.668			
LPB				28.865	82	7741	34766
water bleed				59.730			
htd. FW	17.20	220.00	188.13	336.938			
HPFW	1479.87	221.17	193.69	288.443			
HPE1				288.443	114	10165	50605
6	1422.95	343.99	320.56	0.000			
HPE2				288.443	45	5445	19631
7	1395.59	403.49	388.51	0.000			
HPE3				288.443	217	14749	92078
8	1368.22	564.65	572.59	0.000			
Blwdn	1368.22	584.65	595.43	5.656			
HPB				282.787	477	47408	185657
9	1368.22	584.65	1175.66	0.000			
HPS1				282.787	0	0	0
10	1368.22	584.65	1175.66	0.000			
HPS2				282.787	162	22391	79806
11	1315.60	941.00	1460.70	0.000			
Into HPT	1265.00	935.00	1458.99	282.787			
bef addn	350.00	630.40	1330.20	282.787			
HPT addn	350.00	432.00	1204.98	59.730			
aft addn	350.00	590.06	1308.36	342.517			
HPT exit	115.00	389.97	1219.63	342.517			
IPFW	129.36	220.09	188.56	48.495			
IPE				48.495	19	1712	8479
1	124.38	343.99	315.62	0.000			
Blwdn	124.38	343.99	315.62	0.951			
IPB				47.544	122	11572	49815
2	124.38	343.99	1191.86	0.000			
IPS1				47.544	4	449	1973
3	124.38	403.49	1225.89	0.000			
IPS2				47.544	24	1243	12385
4	119.60	584.65	1319.98	0.000			
Into LPT	115.00	410.99	1231.50	390.061			
LPT exit	0.74	91.57	962.17	390.061			

STEAM TURBINE

	No. of steps	Exit Quality	Efficiency(%)	Work (kW)
To HPT additn	4	1.157		
To HPT exit	3	1.033	81.66	19579
To LPT exit	13	0.866	81.50	30786

Gross power = 50365 kW. Mech/Elect losses = 2015 kW.
Generator output = 48350 kWe. ST auxiliaries = 338 kWe
Boiler feedpumps = 532 kWe

CONDENSER

	p psia	T F	h BTU/lb	m kpph
LPT exit	0.7365	91.57	962.17	390.06
Saturation	0.7365	91.57		
Condensate well	0.7365	87.57	55.58	390.06
Cooling water in		65.00		23575.16
Cooling water out		80.00		23575.16

Number of passes= 1 UA= 5452 BTU/s-F Surface area = 26669 sq.ft
Tubes: OD = 1 in Length= 38.6 ft number= 2641
Cooling water: Velocity= 9 ft/s DP = 9.02 psia Pumps = 266 kWe.

STEAM CYCLE HEAT BALANCE

Energy in = 215410 BTU/s

GT Exhaust Sensible	GT Exhaust Latent	Duct Burner Fuel HHV	Makeup+Proc Return	Pump Work	External Steam
168691	26189	0	88	451	19993

Energy out = 215411 BTU/s

Heat Radiated	Blow down	Mech/Elec Losses	Stack Sens.	Stack Latent	Condnsr C.W.	Process Steam	GT Injec.	Proc. Water	Electric Output
2214	1019	1910	36899	26189	98230	0	0	3121	45830

Zero enthalpy: dry gases & liquid water @ 32 F (273.15 K)
Heat Balance Error = In - Out =-.875 BTU/s = 0 %

HRSG GAS-SIDE PROFILE

Gas	Tg F	Tw F HP/IP	DT F HP/IP	Qg/UA F	DELTA P inch H2O	UA BTU/s-F	Qg BTU/s	Vg ft/s	Tube Rows	Lngth ft
1	994.9	941.0	53.9							
				139.5	1.8	162.1	22614.4	58.4	6.6	2.7
	872.0	584.6	287.3							
2	872.0	584.6	287.3							
				100.3	3.4	477.3	47882.1	50.2	15.3	6.4
	604.7	584.6	20.0							
3	604.7	564.6	40.0							
3	604.7	584.6	20.0							
				67.1	1.6	240.7	16151.2	42.7	8.6	3.6
	512.2	403.5	108.7							
	512.2	403.5	108.7							
4	512.2	403.5	108.7							
4	512.2	403.5	108.7							
				120.9	0.3	49.2	5953.1	40.0	1.8	0.7
	477.9	344.0	133.9							
	477.9	344.0	133.9							
5	477.9	344.0	133.9							
				96.0	0.7	121.8	11687.9	37.9	4.1	1.7
	410.0	344.0	66.0							
6	410.0	344.0	66.0							
6	410.0	344.0	66.0							
				89.8	0.7	133.6	11995.4	35.0	4.9	2.0
	339.8	221.2	118.6							
	339.8	220.1	119.7							
7	339.8	220.0	119.8							
				94.9	0.4	82.4	7817.9	32.5	2.9	1.2
	293.7	220.0	73.7							
8	293.7	150.0	143.7							
				154.1	0.2	45.1	6948.0	30.7	1.7	0.7
	252.6	87.4	165.1							

Duct burner fuel= 0 kpph
Gas mole composition: 75 %N2+Ar 13.4 %O2 5.66 %CO2 5.95 %H2O .002 %SO2
Flue gas dew point = 97 F M.W.= 28.9

HRSG TOTALS	Economisers	Evaporators	Superheaters	TOTAL
Q BTU/s	38949	66721	24083	129753
UA BTU/s-F	441	682	190	1312
A sq.ft	191428	270238	94164	555830

Prime surface= 32332 fin surface= 523497 sq.ft. Averaged fin eff.= .726
HRSG frontal area = 804 sq.ft. Gas mass flux= 5.96 kpph/sq.ft
HRSG length = 19.1 ft, 45.7 tube rows, 1929 ft of tubes per row.
2 in dia. tubes with serrated fins, staggered arrangement.
Fin thickness/dia.= .03 , height/dia.= .4 , spacing/dia.= .07
Tube transverse pitch/dia.= 2.5 , row longitudinal pitch/dia.= 2.5

GE 7111 EA

Water cooling

air to coal ratio	2.41	air pressure	184	Cp air	0.248
water coal ratio	0.133	air temperature	680	Cp water	1.000
air to water ratio	18.12	water temperature	80	Cp steam	0.455

	lb	wt %	mols	mol %	partial pressure
air	18.12	94.77%	0.63	91.90%	169.10
water	1.00	5.23%	0.06	8.10%	14.90

sat temp 213

Temperature of combined stream entering boost compressor

400.04 F sat pressure 247 psia Rel. Hum. 6.03%

Temperature of stream exiting compressor (85% comp eff)

Tf = Ti + (Ti/n*((Pf/Pi)^((k-1)/k)-1))

where
Ti - inlet temperature - 400.04 F - 860.04 R
n - efficiency - 85.00%
k - ratio of specific heat @ constant pressure to specific
to specific heat @ constant volume 1.384
Pf - final pressure 350 psia
Pi - initial pressure 184 psia

Tf = 597.65 F

	A	B	C	D	E	F	G	H	I	J	K	L	M	N	O
1	Standardized IGCC Gasifier Utility Application													Reference Coal -	
2	Mass & Energy Balance					GE 7111 EA		Plant		Full Load				Predicted Gasifier Out	
3	Stream No.			1		2		3		4				5	
4	Identification			AR Coal		Coal Fines		Sized Coal		CompAir@	2.41 A/C			Water @	0.26
5	From			Illinois #6		Sizer @	30%	Combined Streams		Aux Compr &/or Booster Compr				Cooling Water	H2O/
6	To			Sizer		Briquetting		Gasifier		Gasifier				Gasifier	Coal
7	Gas	Mol Wt		lb/hr	wt %	lb/hr	wt %	lb/hr	wt %	lb/hr	lb/mol	wt %	mol %	lb/hr	
8															
9	CO	28.010								0	0.00	0.00	0.00		
10	H2	2.016								0	0.00	0.00	0.00		
11	CO2	44.010								111	0.01	0.05	0.03		
12	H2O	18.015								1,485	0.18	0.64	1.02	25,205	
13	CH4	16.042								0	0.00	0.00	0.00		
14	C2H6	30.068								0	0.00	0.00	0.00		
15	H2S	34.076								0	0.00	0.00	0.00		
16	COS	60.070								0	0.00	0.00	0.00		
17	N2	28.013								175,286	21.65	75.03	77.28		
18	Ar	39.948								3,069	0.38	1.31	0.95		
19	HCl	36.461								0	0.00	0.00	0.00		
20	HCN	27.026								0	0.00	0.00	0.00		
21	NH3	17.030								0	0.00	0.00	0.00		
22	CS2	76.131								0	0.00	0.00	0.00		
23	SO2	64.059								0	0.00	0.00	0.00		
24	NO	30.006								0	0.00	0.00	0.00		
25	O2	31.999								53,684	6.63	22.98	20.72		
26	NaCl	58.497								0	0.00	0.00	0.00		
27	KCl	74.596								0	0.00	0.00	0.00		
28	Total Gas (lb/hr)									233,635	28.86	100.00	100.00	25,205	
29															
30	Volumetric Flow Rates (STP 14.7 psia, 59F)														
31	(acfm)									4,377					
32	(scfm)									51,121					
33															
34	Heat (BTU/lb)													1332	
35	Cp (BTU/lb F)									0.251					
36	HHV (BTU/lb)			10,776		10,776		10,776		0					
37	LHV (BTU/lb)			10,239		10,239		10,260		0					
38	Sensible Heat above														
39	59 F Btu/lb steam			0		0		0		135					
40	Latent Heat of														
41	Water Btu/lb steam									7					
42															
43	Chemical Heat			992.61		297.78		1034.51		0.00					
44	(LHV) MBtu/hr														
45	Sensible Heat			0.00		0.00		0.00		31.58					
46	above 59 F MBtu/hr														
47	Latent Heat			52.05		15.62		52.05		1.54					
48	of Water MBtu/hr														
49	TotalHeat(MBtu/hr)			1044.67		313.40		1086.56		33.12				33.57	
50				Number of Gasifiers for 85% Plant Availability @90% Gasifier Availability,										350	psia &
51															
52	C	12.011		58,273	60.11%	17,482	60.11%	61,282	60.78%		30				
53	H	1.008		4,043	4.17%	1,213	4.17%	4,043	4.01%		165			2,801	
54	O	16.000		7,339	7.57%	2,202	7.57%	7,339	7.28%		55,085			22,405	
55	N	14.007		1,144	1.18%	343	1.18%	1,144	1.13%		175,286			25,205	Total
56	S	32.060		2,792	2.88%	838	2.88%	2,792	2.77%		230,566	Tota.			
57	CL2	35.500		0	0.00%	0	0.00%	0	0.00%		-				
58	H2O	18.016		13,669	14.10%	4,101	14.10%	13,669	13.56%						
59	ZnFe2O4														
60	ZnS														
61	FeS														
62	Fe2O3														
63	ZnO														
64	ASH			9,694	10.00%	2,908	10.00%	10,563	10.48%						
65	Total Solids			96,944	100.01%	29,083	100.01%	100,831	100.00%						
66	Total Flow (pph)			96,944 *		29,083		100,831		233,635				25,205	
67															
68	Total Flow (pps)			26.93		8.08		28.01		64.99				7.00	
69	Pressure (psia)			14.7		14.7		14.7		350 *				350 *	
70	Temperature (F)			59		59		59		598 *				598 *	

l - Illinois #6 J-1538 DE-AC21-89MC26291

ifier Output 10/16/90 Revision 7

O	P	Q	R	S	T	U	V	W	X	Y	Z	AA	AB	AC	AD
															1
															2
											10	55 scf/lb of coal			3
	6	Uncomb	7		8		9				Hot Gas with Tars				4
0.26	Ash	Carbon	Fines (Char)		Tar		Dust(per RTI dia)		Miscellaneous		Gasifier	N2 in coal			5
ler H2O/	Gasifier	2.69%	Gasifier @	4.00%	Gasifier @	6.00%	Final Cyclone		Gasifier Heat		HGCU	to NH3 Conv		90.1%	6
Coal	Ash Silo		Briquetting		HGCU		Reclaim		Losses						7
	lb/hr	wt %	lb/hr	wt %	lb/hr	wt %	lb/hr	wt %			lb/hr	lb/mol	wt %	mol %	8
											90,473	6.39	26.26	22.82	9
											4,070	0.29	1.18	14.26	10
											40,487	2.86	11.75	6.50	11
											17,590	1.24	5.11	6.90	12
5,205											7,392	0.52	2.15	3.26	13
											1,466	0.10	0.43	0.34	14
											2,543	0.18	0.74	0.53	15
											748	0.05	0.22	0.09	16
											175,399	12.39	50.91	44.24	17
											3,068	0.22	0.89	0.54	18
											0	0.00	0.00	0.00	19
											119	0.01	0.03	0.03	20
											1,176	0.08	0.34	0.49	21
											0	0.00	0.00	0.00	22
											0	0.00	0.00	0.00	23
											0	0.00	0.00	0.00	24
											0	0.00	0.00	0.00	25
											0	0.00	0.00	0.00	26
											0	0.00	0.00	0.00	27
											344,532	24.34	100.00	100.00	28
5,205															29
											344,532				30
											15,447				31
											89,400				32
															33
															34
1332											0.329				35
	0.260		0.260		0.26		0.260				2,588.8				36
	0		10,936		17,329		0				2,375.0				37
	0		10,936		16,571		0								38
											349				39
	154		276		276		323								40
											214				41
	0		0		749		0								42
											818.25				43
	22.73		42.41		96.39		0.00								44
											120.13				45
	1.73		1.07		1.60		0.16		60.7 Water/steam jacket						46
											73.69	Gas HHV=	189	Btu/scf	47
	0.00		0.00		4.36		0.00		14.1 Traversing Stirrer			Estimated=	544	Btu/lb	48
											1012.07	Calculated=	548	Btu/lb	49
33.57	24.46		43.48		102.35		0.16		74.8 Total			BulkGas=	3.97%	H2O	50
psia & 17 tph (typical) Coal each:				4.0		Unit Output (MWn)			122.3 MWn			Calc Comb Temp (F)		2045	51
											56,736	56,735	0.00%		52
	1,568	13.92	3,009	77.60%	5,119	88.00%					8,527	8,527	0.00%		53
2,801			0	0.00%	463	8.00%					96,979	96,979	0.00%		54
22,405			0	0.00%	116	2.00%					176,430	176,429	0.00%		55
25,205 Total			0	0.00%	58	1.00%					2,792	2,793	-0.02%		56
	0	0.00	0	0.00%	58	1.00%				Sub-Totals	341,463	341,464	0.00%		57
			0	0.00%							Sum of Streams	Sum of Gas Constituents	Mass Unbalance		58
			0	0.00%											59
							440	90			balance check				60
							10	2			Cycle Efficiency(g) = 43.37%				61
							29	6			Cycle Efficiency (n) = 39.94%				62
							0	0							63
							10	2							64
							0	0							65
	9,694	86.08	869	22.40%											66
	11,262	100	3,878	100.00%	5,817	100.00%	489	100			344,532				67
25,205	11,262		3,878		5,817		489								68
											95.70				69
7.00	3.13		1.08		1.62		0.14				259				70
350 *	14.7		350 *		350 *		259				1120				
598 *	650		1120		1120		1300								

	AE	AF	AG	AH	AI	AJ	AK	AL	AM	AN	AO	AP	AQ	AR
1	**Standardized IGCC Gasifier Utility Application**											**Reference Coal - Ill**		
2	**Mass & Energy Balance**			**GE 7111 EA**		**Plant**						**Predicted Gasifier Out**		
3	Stream No.		11				12				13	14		
4	Identification		Air				Bleed Air				Bleed Air	Compressor Discharge		
5	From		Atmosphere				Compressor				for	Compressor		
6	To		Gas Turbine Compressor				Booster Compressor Cooler				Coolant	Combustor		
7	Gas	Mol Wt	lb/hr	lb/mol	wt %	mol %	lb/hr	lb/mol	wt %	mol %	lb/hr	lb/hr	lb/mol	wt %
8														
9	CO	28.010	0	0.00	0.00	0.00	0	0.00	0.00	0.00	0	0	0.00	0.00
10	H2	2.016	0	0.00	0.00	0.00	0	0.00	0.00	0.00	0	0	0.00	0.00
11	CO2	44.010	1,092	0.01	0.05	0.03	111	0.01	0.05	0.03	84	898	0.01	0.05
12	H2O	18.015	14,663	0.18	0.64	1.02	1,485	0.18	0.64	1.02	1,127	12,051	0.18	0.64
13	CH4	16.042	0	0.00	0.00	0.00	0	0.00	0.00	0.00	0	0	0.00	0.00
14	C2H6	30.068	0	0.00	0.00	0.00	0	0.00	0.00	0.00	0	0	0.00	0.00
15	H2S	34.076	0	0.00	0.00	0.00	0	0.00	0.00	0.00	0	0	0.00	0.00
16	COS	60.070	0	0.00	0.00	0.00	0	0.00	0.00	0.00	0	0	0.00	0.00
17	N2	28.013	1,730,316	21.65	75.03	77.28	175,286	21.65	75.03	77.28	132,966	1,422,064	21.65	75.03
18	Ar	39.948	30,293	0.38	1.31	0.95	3,069	0.38	1.31	0.95	2,328	24,896	0.38	1.31
19	HCl	36.461	0	0.00	0.00	0.00	0	0.00	0.00	0.00	0	0	0.00	0.00
20	HCN	27.026	0	0.00	0.00	0.00	0	0.00	0.00	0.00	0	0	0.00	0.00
21	NH3	17.030	0	0.00	0.00	0.00	0	0.00	0.00	0.00	0	0	0.00	0.00
22	CS2	76.131	0	0.00	0.00	0.00	0	0.00	0.00	0.00	0	0	0.00	0.00
23	SO2	64.059	0	0.00	0.00	0.00	0	0.00	0.00	0.00	0	0	0.00	0.00
24	NO	30.006	0	0.00	0.00	0.00	0	0.00	0.00	0.00	0	0	0.00	0.00
25	O2	31.999	529,940	6.63	22.98	20.72	53,684	6.63	22.98	20.72	40,723	435,532	6.63	22.98
26	NaCl	58.497	0	0.00	0.00	0.00	0	0.00	0.00	0.00	0	0	0.00	0.00
27	KCl	74.596	0	0.00	0.00	0.00	0	0.00	0.00	0.00	0	0	0.00	0.00
28	Total Gas (lb/hr)		2,306,304	28.86	100.00	100.00	233,635	28.86	100.00	100.00	177,228	1,895,441	28.86	100.00
29														
30	Volumetric Flow Rates (STP 14.7 psia, 59F)													
31	(acfm)		504,631				8,979					72,843		
32	(scfm)		504,631				51,121				39,056	414,732		
33														
34	hgAdiabHeat(BTU/lb)													
35	Cp (BTU/lb F)		0.240				0.254					0.254		
36	HHV (BTU/lb)		0.0				0.0					0.0		
37	LHV (BTU/lb)		0.0				0.0					0.0		
38	Sensible Heat													
39	above 59 F Btu/lb		0				158					158		
40	Latent Heat													
41	of Water Btu/lb		7				7					7		
42														
43	Chemical Heat		0.00				0.00					0.00		
44	(LHV) MBtu/hr													
45	Sensible Heat		0.00				36.85					298.93		
46	above 59 F MBtu/hr													
47	Latent Heat		15.25				1.54					12.53		
48	of Water MBtu/hr													
49	TotalHeat(MBtu/hr)		15.25				38.39					311.46		
50												Parasitic Load		10.48 M
51														
52	C	12.011		298				30			23		245	245
53	H	1.008		1,629				165			125		1,339	1,339
54	O	16.000		543,768				55,085			41,786		446,897	446,897
55	N	14.007		1,730,316				175,286			132,966		1,422,064	1,422,064
56	S	32.060		0				0			0		0	0
57	CL2	35.500		2,276,011	sub-totals			230,566	sub-totals		174,900	sub-totals	1,870,545	1,870,545
58	H2O	18.016												balance check
59	ZnFe2O4													
60	ZnS													
61	FeS													
62	Fe2O3													
63	ZnO													
64	ASH													
65	Total Solids													
66	Total Flow (pph)		2,306,304				233,635				177,228	1,895,441		
67														
68	Total Flow (pps)		640.64 *				64.90			*	49.23	526.51		
69	Pressure (psia)		14.7 *				184 *					184		
70	Temperature (F)		59 *				681 *					681		

Illinois #6 J-1538 DE-AC21-89MC26291

r Output Revision 7 10/16/90

AS	AT	AU	AV	AW	AX	AY	AZ	BA	BB	BC	BD	BE	BF	BG
														1
														2
														3
charge	15 Fuel HGCU GT Combustor			%H2S Removed 99.0%	16 Inlet Gas GT Combustor GT Expander			Thrml NO (ppmvd) *Rich/Lean Red. F	25 85%	17 Exhaust Gas Gas Turbine				4
														5
														6
%	mol %	lb/hr	mol/hr	wt %	mol %	lb/hr	lb/mol	mols	wt %	mol %	lb/hr	mols/hr	wt %	mol %	7
														8
0.00	0.00	90,473	3,230	26.38	22.84	0	0.00	0.00	0.00	0.00	0	0.00	0.00	0.00	9
0.00	0.00	4,020	1,994	1.17	14.10	0	0.00	0.00	0.00	0.00	0	0.00	0.00	0.00	10
0.05	0.03	40,487	920	11.80	6.51	208,384	2.70	0.0021	9.31	6.13	208,468	4736.82	8.63	5.68	11
0.64	1.02	19,365	1,075	5.65	7.60	88,787	1.15	0.00	3.97	6.38	89,913	4991.03	3.72	5.98	12
0.00	0.00	7,392	461	2.16	3.26	0	0.00	0.00	0.00	0.00	0	0.00	0.00	0.00	13
0.00	0.00	1,466	49	0.43	0.34	0	0.00	0.00	0.00	0.00	0	0.00	0.00	0.00	14
0.00	0.00	25	1	0.01	0.01	0	0.00	0.00	0.00	0.00	0	0.00	0.00	0.00	15
0.00	0.00	7	0	0.00	0.00	0	0.00	0.00	0.00	0.00	0	0.00	0.00	0.00	16
75.03	77.28	175,399	6,261	51.14	44.28	1,598,280	20.69	0.0255	71.40	73.84	1,731,246	61801.53	71.67	74.10	17
1.31	0.95	3,068	77	0.89	0.54	27,965	0.36	0.00	1.25	0.91	30,293	758.30	1.25	0.91	18
0.00	0.00	0	0	0.00	0.00	0	0.00	0.00	0.00	0.00	0	0.00	0.00	0.00	19
0.00	0.00	119	4	0.03	0.03	0	0.00	0.00	0.00	0.00	0	0.00	0.00	0.00	20
0.00	0.00	1,176	69	0.34	0.49	0	0.00	0.00	0.00	0.00	0	0.00	0.00	0.00	21
0.00	0.00	0	0	0.00	0.00	0	0.00	0.00	0.00	0.00	0	0.00	0.00	0.00	22
0.00	0.00	0	0	0.00	0.00	56	0.0007	0.0000	0.0025	0.0011	56	0.87	0.00	0.00	23
0.00	0.00	0	0	0.00	0.00	456	0.0059	0.0000	0.0204	0.0197	456	15.19	0.02	0.02	24
0.00	0.00	0	0	0.00	0.00	314,516	4.07	0.0044	14.05	12.72	355,239	11101.56	14.71	13.31	25
22.98	20.72	0	0	0.00	0.00	0	0.00	0.00	0.00	0.00	0	0.00	0.00	0.00	26
0.00	0.00	0	0	0.00	0.00	0	0.00	0.00	0.00	0.00	0	0.00	0.00	0.00	27
0.00	0.00	0	0	0.00	0.00	0	0.00	0.00	0.00	0.00	2,415,667	83405.30	100.00	100.00	28
00.00	100.00	342,998	14,141	100.00	100.00	2,238,439	28.97	0.0345	100.00	100.00					29
						2,238,442 bal ck					2,415,670	bal ck			30
															31
		16,012				193,591					1,438,278				32
		89,281				487,816					526,595				33
															34
															35
		0.334				0.278					0.267				36
		2,548.9				0.0					0.0				37
		2,330.0				0.0					0				38
															39
		375				546					251				40
															41
		219				41					39				42
															43
		799.20				0.00					0.00				44
															45
		128.46				1222.06					607.31				46
															47
		75.06				92.34					93.51				48
															49
		1002.71				1314.40	1314.17 bal chk				700.82				50
10.48 MWg			Combustion Turbine Output			84.385 MWg					1.05 Turbine Compressor Surge Margin				51
															52
245	0.00%		56,587			56,832	56,832	0.00%			56,855	56,855	0.00%		53
1,339	0.00%		8,526			9,865	9,865	0.00%			9,990	9,990	0.00%		54
46,887	0.00%		98,360			545,257	545,260	0.00%			587,045	587,045	0.00%		55
22,064	0.00%		176,429			1,598,493	1,598,493	0.00%			1,731,459	1,731,459	0.00%		56
0	0.00%		28			28	28	0.10%			28	28	0.00%		57
70,545	0.00%		339,930	sub-total		2,210,475	2,210,477	0.00%	sub-total		2,385,377	2,385,377	0.00%	sub-total	58
nce check								balance check					balance check		59
															60
															61
															62
															63
															64
															65
															66
		342,998				2,238,439					2,415,667				67
															68
		95.28				621.79					671.02				69
		259				177 *					15.13				70
		1180				2,020 *					999 *				

	BH	BI	BJ	BK	BL	BM	BN	BO	BP	BQ	BR	BS
1	**Standardized IGCC Gasifier Utility Application**						**Reference Coal -**			**Illinois #6**		
2	**Mass & Energy Balance**			**GE 7111 EA**			**Predicted Gasifier Output**					
3	Stream No.			18			19	Thrml NO (ppmvd)		25	20	21
4	Identification			Fuel for Supplementary Firing			Flue Gas		SCR Red F	80 %	Superheated Steam	Low Pressure Stea
5	From			Gasifier			HRSG		R/L Red F	85 %	HRSG	HRSG
6	To			HRSG			Stack		NOx Reburn F	0 %	Steam Turbine	Steam Turbine
7	Gas	Mol Wt	lb/hr	lb/mol	wt %	mol %	lb/hr	mols/hr	wt %	mol %	lb/hr	lb/hr
8												
9	CO	28.010	0	6.39	26.26	22.82	0	0.00	0.00	0.00		
10	H2	2.016	0	0.29	1.18	14.26	0	0.00	0.00	0.00		
11	CO2	44.010	0	2.86	11.75	6.50	208,468	4736.82	8.63	5.68		
12	H2O	18.015	0	1.24	5.11	6.90	89,913	4991.03	3.72	5.98		
13	CH4	16.042	0	0.52	2.15	3.26	0	0.00	0.00	0.00		
14	C2H6	30.068	0	0.10	0.43	0.34	0	0.00	0.00	0.00		
15	H2S	34.076	0	0.18	0.74	0.53	0	0.00	0.00	0.00		
16	COS	60.070	0	0.05	0.22	0.09	0	0.00	0.00	0.00		
17	N2	28.013	0	12.39	50.91	44.24	1,731,246	61801.53	71.68	74.11		
18	Ar	39.948	0	0.22	0.89	0.54	30,293	758.30	1.25	0.91		
19	HCl	36.461	0	0.00	0.00	0.00	0	0.00	0.00	0.00		
20	HCN	27.026	0	0.01	0.03	0.03	0	0.00	0.00	0.00		
21	NH3	17.030	0	0.08	0.34	0.49	0	0.00	0.00	0.00		
22	CS2	76.131	0	0.00	0.00	0.00	0	0.00	0.00	0.00	Stack Emissions (lb/MBtu)	
23	SO2	64.059	0	0.00	0.00	0.00	56	0.87	0.00	0.00	0.053	
24	NO	30.006	0	0.00	0.00	0.00	91	3.04	0.00	0.00	0.09	
25	O2	31.999	0	0.00	0.00	0.00	355,239	11101.56	14.71	13.31		
26	NaCl	58.497	0	0.00	0.00	0.00	0	0.00	0.00	0.00		
27	KCl	74.596	0	0.00	0.00	0.00	0	0.00	0.00	0.00		
28	Total Gas (lb/hr)		0	24.34	100.00	100.00	2,415,303	83393.15	100.00	100.00		
29							2,415,305	bal chk				
30	Volumetric Flow Rates (STP 14.7 psia, 59F)											
31	(acfm)		0				723,328					
32	(scfm)		0				526,518					
33												
34	Heat (BTU/lb)										1459.5	12
35	Cp (BTU/lb F)		0.334				0.248					
36	HHV (BTU/lb)		2548.9				0.0					
37	LHV (BTU/lb)		2330.0				0					
38	Sensible Heat above											
39	59 F Btu/lb steam		0				48					
40	Latent Heat of											
41	Water Btu/lb steam		0				39					
42												
43	Chemical Heat		0.00				0.00					
44	(LHV) MBtu/hr											
45	Sensible Heat		0.00				116.02					
46	above 59 F MBtu/hr											
47	Latent Heat		0.00				93.51					
48	of Water MBtu/hr											
49	TotalHeat(MBtu/hr)		0.00				209.53				412.72	5
50											HRSG Turbine Ou	
51												
52	C	12.011		0			56,855	56,855	0.00%			
53	H	1.008		0			9,990	9,990	0.00%			
54	O	16.000		0			586,851	586,851	0.00%			
55	N	14.007		0			1,731,289	1,731,289	0.00%			
56	S	32.060		0			28	28	0.00%			
57	CL2	35.500		0	sub-total		2,385,013	2,385,013	0.00%	sub-total		
58	H2O	18.016										
59	ZnFe2O4											
60	ZnS											
61	FeS											
62	Fe2O3											
63	ZnO											
64	ASH											
65	Total Solids											
66	Total Flow (pph)		0				2,415,667				282,780	4
67												
68	Total Flow (pps)		0 *				671.02				78.55	
69	Pressure (psia)		259				14.7				1265	
70	Temperature (F)		1180				253 *				935	

BS	BT	BU	BV	BW
	J-1538	DE-AC21-89MC26291		1
	Revision 7		10/16/90	2
21	22	23	24	3
Pressure Steam	Make Up Water	Sat. Steam	Process Stm	4
HRSG	WaterTreatment	Gasifier	Stm Turbine	5
eam Turbine	HRSG	Steam Turbine	Process Facility	6
lb/hr	lb/hr	lb/hr	lb/hr	7
				8
				9
				10
				11
				12
				13
				14
				15
				16
				17
				18
				19
				20
				21
				22
				23
				24
				25
				26
				27
				28
				29
				30
				31
				32
				33
1237.9	48	1204		34
				35
				36
				37
				38
				39
				40
				41
				42
				43
				44
				45
				46
				47
				48
58.87	1.53	60.69		49
G Turbine Output	48.4	MWg		50
				51
				52
				53
				54
				55
				56
				57
				58
				59
				60
				61
				62
				63
				64
				65
47,556	31,811	59,730	0	66
				67
13.21	8.84	16.59	0.00	68
115	15	350	250	69
423	80	432	420	70

	BX	BY	BZ	CA	CB	CC	CD	CE	CF	CG	CH	CI
1	Standardized IGCC Gasifier Utility Application								Reference Coal -			Illinois #6
2	Mass & Energy Balance				GE 7111 EA				Predicted Gasifier Output			
3	Stream No.		25		26					27		27a
4	Identification		Regen Recycle Loop		Conc SO2 Bleed					Elemental Sulfur		Elemental Sulfu
5	From		Recycle Blower		Regen Loop					Resox Process		DSRP
6	To		Regenerato		SRP					Marketable Byproduct		Marketable Byproc
7	Gas	Mol Wt	lb/hr	wt%	lb/hr	lbs/mol	mols/hr	wt%	mol%	lb/hr	wt%	lb/hr
8												
9	CO	28.010			0	0.00	0.00	0.00	0.00			
10	H2	2.016			0	0.00	0.00	0.00	0.00			
11	CO2	44.010	141	0.05	12	0.02	0.27	0.05	0.04			
12	H2O	18.015	1,756	0.62	146	0.20	8.12	0.62	1.11			
13	CH4	16.042			0	0.00	0.00	0.00	0.00			
14	C2H6	30.068			0	0.00	0.00	0.00	0.00			
15	H2S	34.076			0	0.00	0.00	0.00	0.00			
16	COS	60.070			0	0.00	0.00	0.00	0.00			
17	N2	28.013	212,397	74.87	17,700	24.10	631.84	74.87	86.02			
18	Ar	39.948	0	0.00	0	0.00	0.00	0.00	0.00			
19	HCl	36.461			0	0.00	0.00	0.00	0.00			
20	HCN	27.026			0	0.00	0.00	0.00	0.00			
21	NH3	17.030			0	0.00	0.00	0.00	0.00			
22	CS2	76.131			0	0.00	0.00	0.00	0.00			
23	SO2	64.059	66,311	23.37	5,526	7.52	86.26	23.37	11.74			
24	NO	30.006			0	0.00	0.00	0.00	0.00			
25	O2	31.999	3,081	1.09	257	0.35	8.02	1.09	1.09			
26	NaCl	58.497			0	0.00	0.00	0.00	0.00			
27	KCl	74.596			0	0.00	0.00	0.00	0.00			
28	Total Gas (lb/hr)		283,686	100.00	23,640	32.19	735	100.00	100.00			
29												
30	Volumetric Flow Rates		(STP 14.7 psia, 59 F)									
31	(acfm)		9,972		786							
32	(scfm)		55,650		4,637							
33												
34	Heat (BTU/lb)											
35	Cp (BTU/lb F)		0.240		0.240					0.000		
36	HHV (BTU/lb)											
37	LHV (BTU/lb)											
38	Sensible Heat above											
39	59 F Btu/lb steam											
40	Latent Heat of											
41	Water Btu/lb steam											
42												
43	Chemical Heat									11.00		
44	(LHV) MBtu/hr											
45	Sensible Heat		91.30		7.04					0.00		
46	above 59 F MBtu/hr											
47	Latent Heat		1.83		0.15					0.00		
48	of Water MBtu/hr											
49	TotalHeat(MBtu/hr)		93.13		7.19					11.00		
50												
51												
52	C	12.011										
53	H	1.008										
54	O	16.000										
55	N	14.007										
56	S	32.060								2,763		
57	CL2	35.500										
58	H2O	18.016										
59	ZnFe2O4											
60	ZnS											
61	FeS											
62	Fe2O3											
63	ZnO											
64	ASH				0.00			0				
65	Total Solids											
66	Total Flow (pph)		283,686		23,640					2,763		
67												
68	Total Flow (pps)		78.80		6.57					0.77		
69	Pressure (psia)		294		294					15		
70	Temperature (F)		1400		1300					284		

CI	CJ	CK	CL	CM
inois #6	J-1538	DE-AC21-89MC26291		1
	Revision 7		10/16/90	2
27a	27b	28		3
Elemental Sulfur	Sulfur Dioxide	Ash		4
DSRP	SO2 Recovery Unit	SO2 Reductor		5
arketable Byproduct	Marketable Byproduct	Disposal		6
lb/hr	lb/hr	lb/hr	wt%	7
				8
				9
				10
				11
				12
				13
				14
				15
				16
				17
				18
				19
				20
				21
				22
				23
				24
				25
				26
				27
				28
				29
				30
				31
				32
				33
				34
0.000	0.000			35
				36
				37
				38
		154	0	39
				40
				41
				42
11.00	11.00	3.97	0	43
				44
0.00	0.00	0.00	0	45
				46
0.00	0.00	0.00	0	47
				48
11.00	11.00	3.97	0.4	49
				50
				51
		274	3	52
				53
				54
				55
2,763	2,763			56
				57
				58
				59
				60
				61
				62
				63
		9,694	97	64
		9,968	100	65
2,763	5,526	9,968	100	66
				67
0.77	1.53	2.77		68
15	100	15		69
190	59	284		70

100 MW Utility Cycle
Asea Brown Boveri GT 11N

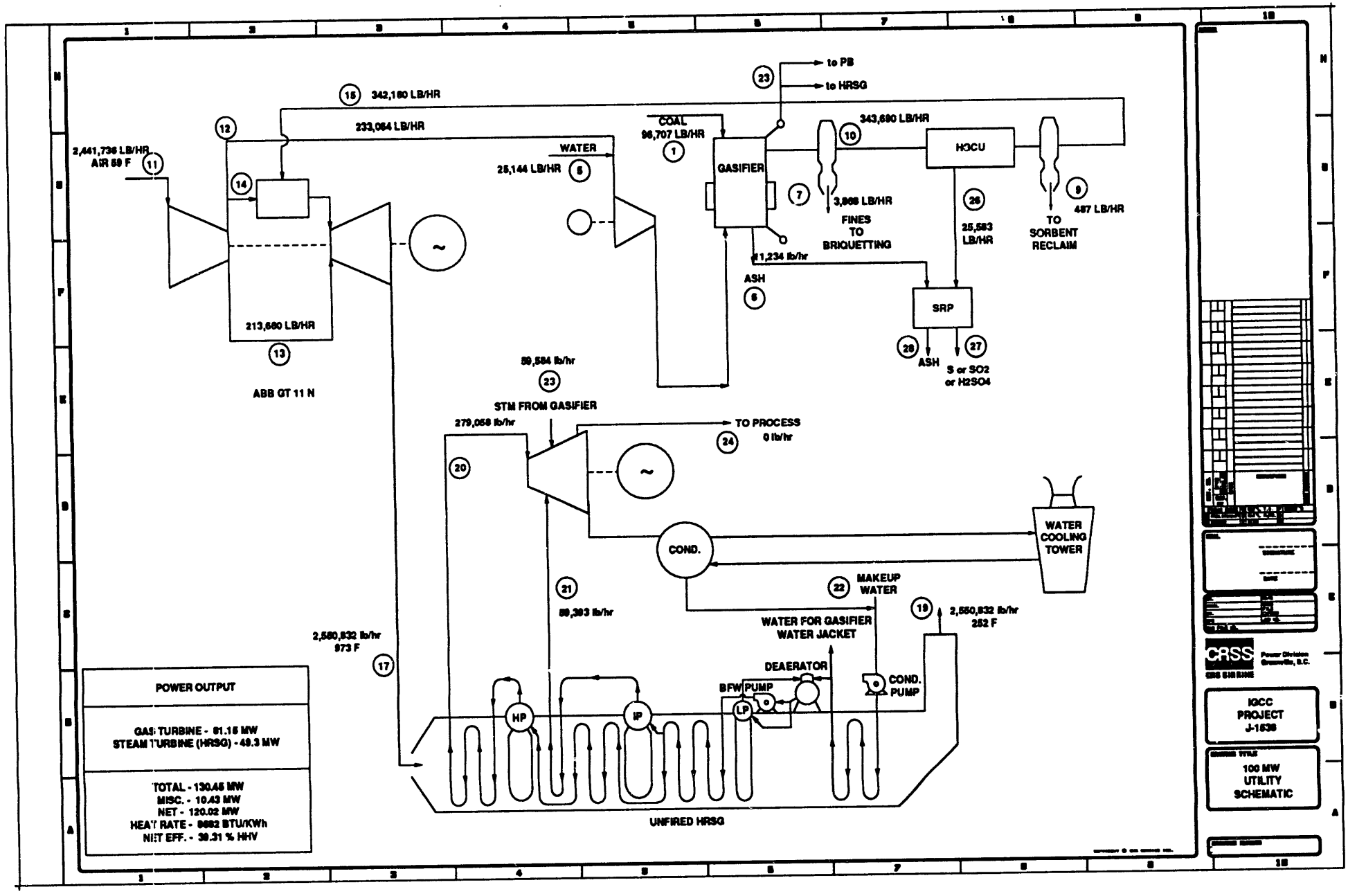
342,160 LB/HR
233,064 LB/HR
2,441,736 LB/HR
AIR 59 F
213,660 LB/HR
ABB GT 11 N
WATER
25,144 LB/HR
COAL
96,707 LB/HR
GASIFIER
to PB
to HRSG
343,690 LB/HR
HOCU
3,868 LB/HR
FINES
TO
BRIQUETTING
25,583
LB/HR
487 LB/HR
TO
SORBENT
RECLAIM
11,234 lb/hr
ASH
SRP
ASH
S or SO2
or H2SO4
89,584 lb/hr
STM FROM GASIFIER
279,058 lb/hr
TO PROCESS
0 lb/hr
COND.
WATER
COOLING
TOWER
MAKEUP
WATER
89,393 lb/hr
WATER FOR GASIFIER
WATER JACKET
2,550,932 lb/hr
252 F
2,550,932 lb/hr
973 F
DEAERATOR
BFW PUMP
COND.
PUMP
HP
IP
LP
UNFIRED HRSG
POWER OUTPUT
GAS TURBINE - 81.15 MW
STEAM TURBINE (HRSG) - 49.3 MW
TOTAL - 130.45 MW
MISC. - 10.43 MW
NET - 120.02 MW
HEAT RATE - 9682 BTU/KWh
NET EFF. - 38.31 % HHV
CRSS
IGCC
PROJECT
J-1538
100 MW
UTILITY
SCHEMATIC

IGCC 60 - 100 MW UTILITY CYCLE
ASEA BROWN BOVERI GT 11 N

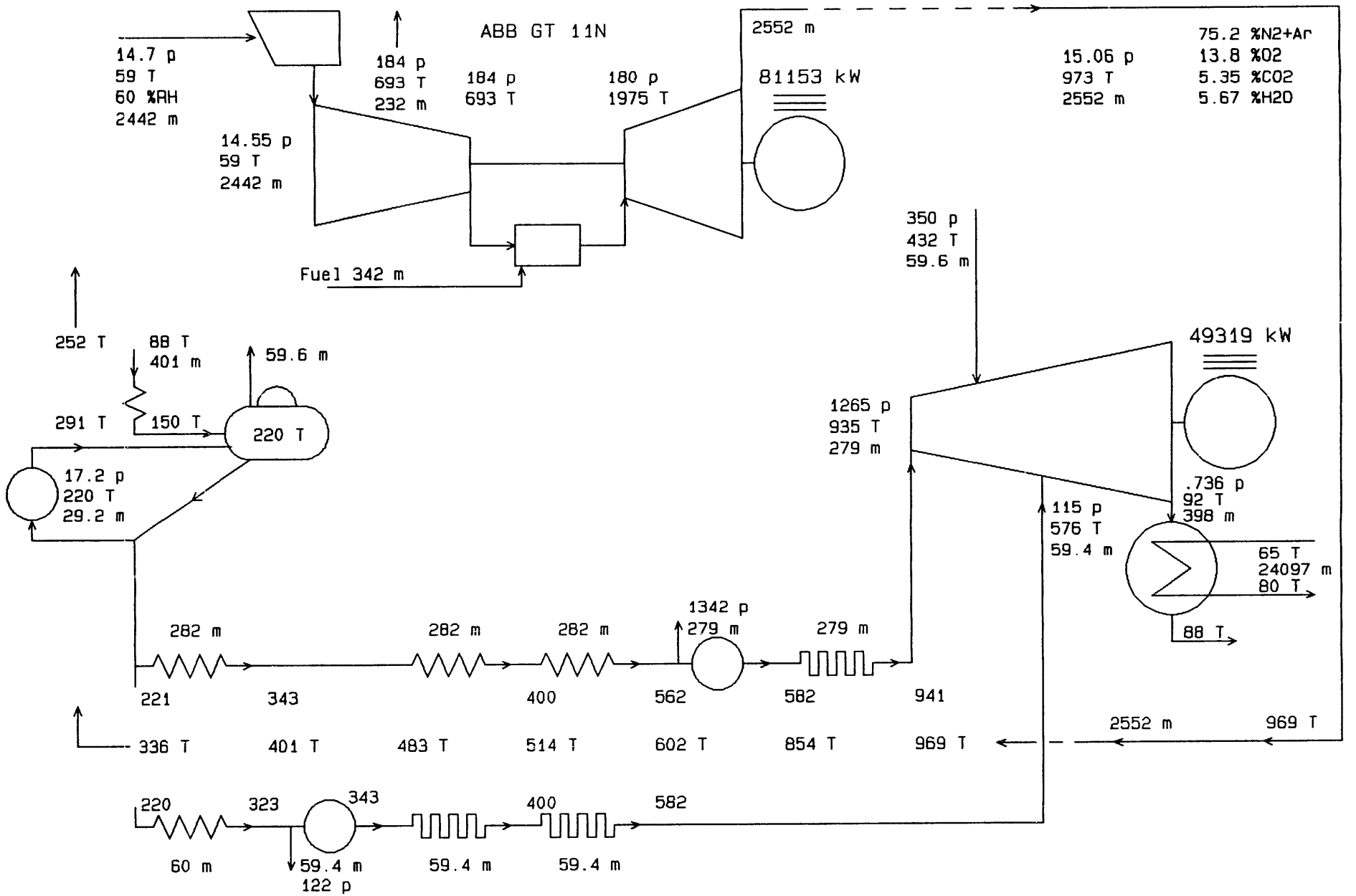

GTPRO 3.31 Michael Brown 10-15-1990 13:29:09
p psia, T F, m kpph

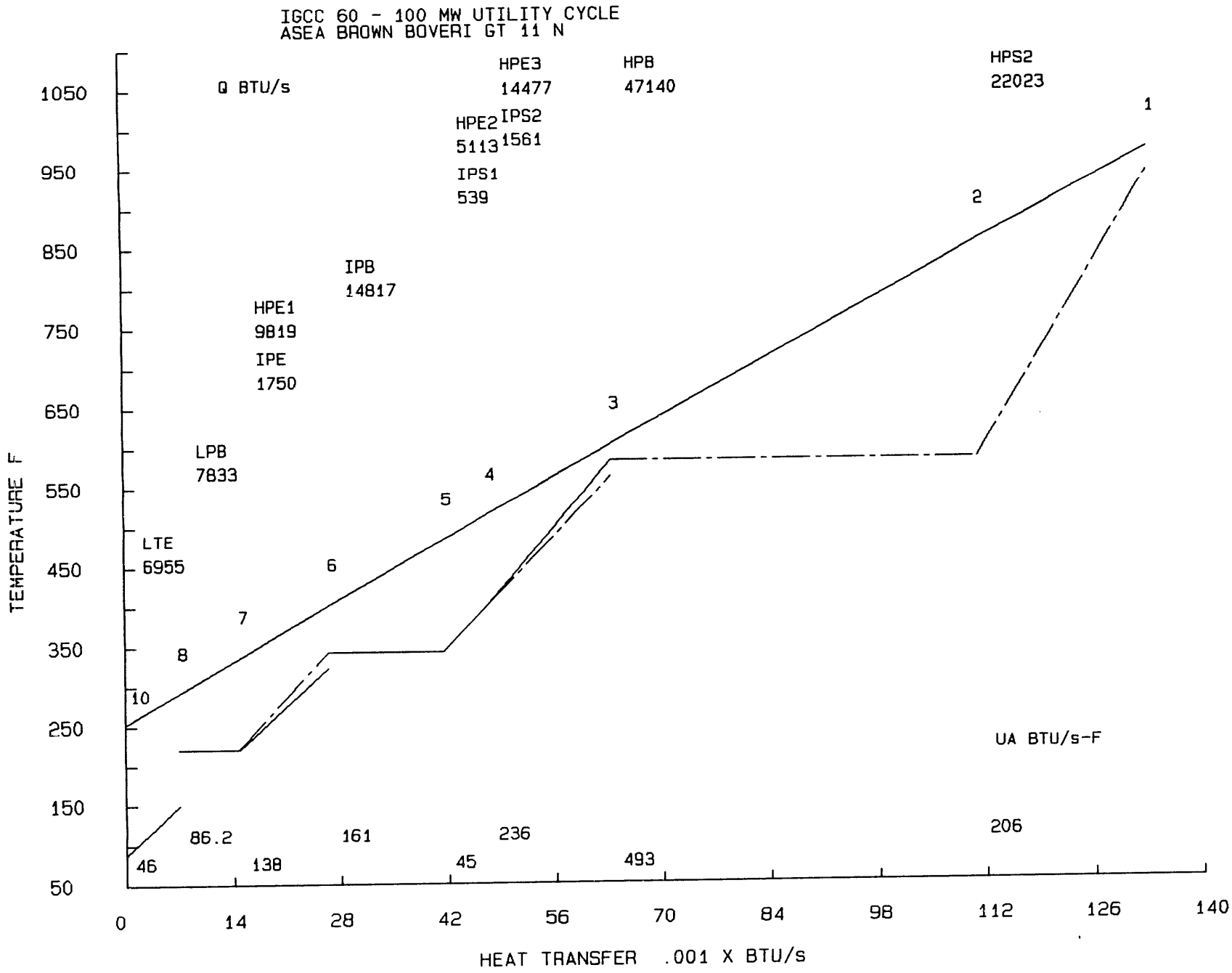

GTPRO 3.31 Michael Brown 10-15-1990 13:29:09

GTPRO 3.31 Michael Brown 10-15-1990 13:28:13
IGCC 60 - 100 MW UTILITY CYCLE
ASEA BROWN BOVERI GT 11 N

ESTIMATED G.T. SITE PERFORMANCE

Fuel=Fuel G.T. @ 100 % rating, XIGV= 0
Site ambient conditions: 14.7 psia, 59 F, 60 % RH
Inlet loss= 4 inch H2O, exhaust loss= 10 inch H2O
Evap. inlet cooler to 0 % RH.

G.T. DEVIATION FROM NOMINAL, CLEAN ENGINE

Compressor inlet airflow % reduction = 0
Compressor efficiency reduction % = 0
Turbine efficiency reduction % = 0
Maximum firing temperature excess over base load = 0 F
Combustor % pressure loss (0 means nominal value) = 0
Combustor inefficiency + heat loss % (0 means nominal value) = 0
Cooling air increase % (0 means nominal value) = 0
Process air bleed location (0 means none) = 1
Process air bleed % of inlet = 9.5

#	Model	PR	TIT F	TET F	Mair kpph	kWe	H.R.LHV BTU/kWh	Mex kpph	N2+Ar %	O2 %	CO2 %	H2O %
35	ABB GT 11N	12.7	1975	973	2442	81153	11399	2552	75.20	13.78	5.35	5.67

Fuel flow = 342 kpph
G.T. auxillary power = 408 kWe.

ESTIMATED G.T. CYCLE

STREAM	TEMP. F	PRESS. psia	MASSFLOW kpph	M.W.	MOLE COMPOSITION % N2+Ar	O2	CO2	H2O
Ambient air in	59	14.70	2441.75	28.75	78.22	20.74	0.03	1.01
Compr. inlet	59	14.55	2441.75	28.75	78.22	20.74	0.03	1.01
Turbine coolant	misc.		213.65					
Process air bld	693	184.33	231.97	28.75	78.22	20.74	0.03	1.01
Compr. disch.	693	184.33	1996.14	28.75	78.22	20.74	0.03	1.01
Turbine inlet	1975	179.73	2338.30	28.86	74.92	13.14	5.84	6.10
Turbine exhaust	973	15.06	2551.94	28.85	75.20	13.78	5.35	5.67

Compressor= 111877 Turbine= 194931 Mech. loss= 664 kW
Turbine coolant= 8.75 % compr in
GT specific power @ gen term= 33.2 kW per kpph
GT efficiency @ gen term= 27.54 % HHV = 29.93 % LHV

GAS TURBINE/GENERATOR HEAT BALANCE

Energy in = 288255 BTU/s

Inlet air Sensible	Inlet air Latent	Water Inj.	Steam Inj.	Fuel HHV
4466	4516	0	0	279274

Energy out = 289915 BTU/s

Incompl comb & carcass rad	GT Mech. Losses	Gearbox Loss	Generator Loss	Exhaust Sensible	Exhaust Latent	Electric Output	Proc Air
1028	422	0	1181	172966	26395	76923	11001

Zero enthalpy: dry gases & liquid water @ 32 F (273.15 K)
Heat Balance Error = In - Out =-1660 BTU/s =-.576 %

TPRO 3.31 Michael Brown 10-15-1990 13:28:51 Steam cycle p.1
GCC 60 - 100 MW UTILITY CYCLE
SEA BROWN BOVERI GT 11 N
ype: 6 Subtype: 2 Induction

	P psia	T F	h BTU/lb	m kpph	UA BTU/s-F	Q BTU/s	A sq.ft
nd rtrn	0.74	87.57	55.58	398.030			
akeup	17.72	80.00	48.02	3.384			
W supl	17.72	87.51	55.51	401.415			
TE				401.415	46	6955	21192
rom LTE	17.20	150.00	117.88	401.415			
PB				29.210	86	7833	36602
ater bleed				59.580			
td. FW	17.20	220.00	188.13	341.835			
PFW	1423.77	221.13	193.48	281.848			
PE1				281.848	119	9819	53190
6	1382.30	342.54	318.89	0.000			
PE2				281.848	41	5113	17650
7	1362.17	399.84	384.20	0.000			
PE3				281.848	207	14477	88284
8	1342.04	562.08	569.12	0.000			
lwdn	1342.04	582.08	591.91	2.791			
PB				279.057	493	47140	192909
9	1342.04	582.08	1177.03	0.000			
PS1				279.057	0	0	0
10	1342.04	582.08	1177.03	0.000			
[illegible]				279.057	206	22023	102110
[illegible]1	1302.95	941.00	1461.14	0.000			
nto HPT	1265.00	935.00	1458.99	279.057			
ef addn	350.00	630.40	1330.20	279.057			
PT addn	350.00	432.00	1204.98	59.580			
ft addn	350.00	589.71	1308.16	338.637			
PT exit	115.00	389.65	1219.45	338.637			
PFW	125.66	220.09	188.55	59.987			
PE				59.987	19	1750	8245
1	122.00	322.54	293.59	0.000			
1wdn	122.00	342.54	314.10	0.594			
PB				59.393	161	14817	66074
2	122.00	342.54	1191.52	0.000			
PS1				59.393	4	539	2263
3	122.00	399.84	1224.17	0.000			
PS2				59.393	29	1561	15156
4	118.45	582.08	1318.77	0.000			
nto LPT	115.00	415.23	1233.82	398.030			
PT exit	0.74	91.57	963.70	398.030			

STEAM TURBINE

	No. of steps	Exit Quality	Efficiency(%)	Work (kW)
To HPT additn	4	1.157		
To HPT exit	3	1.033	81.66	19336
To LPT exit	13	0.868	81.52	31508

Gross power = 50844 kW. Mech/Elect losses = 1525 kW.
Generator output = 49319 kWe. ST auxiliaries = 345 kWe
Boiler feedpumps = 502 kWe

CONDENSER

	p psia	T F	h BTU/lb	m kpph
LPT exit	0.7365	91.57	963.70	398.03
Saturation	0.7365	91.57		
Condensate well	0.7365	87.57	55.58	398.03
Cooling water in		65.00		24097.37
Cooling water out		80.00		24097.37

Number of passes= 1 UA= 5573 BTU/s-F Surface area = 27260 sq.ft
Tubes: OD = 1 in Length= 38.6 ft number= 2700
Cooling water: Velocity= 9 ft/s DP = 9.02 psia Pumps = 272 kWe.

STEAM CYCLE HEAT BALANCE

Energy in = 219773 BTU/s

GT Exhaust Sensible	GT Exhaust Latent	Duct Burner Fuel HHV	Makeup+Proc Return	Pump Work	External Steam
172966	26395	0	45	425	19942

Energy out = 219774 BTU/s

Heat Radiated	Blow down	Mech/Elec Losses	Stack Sens.	Stack Latent	Condnsr C.W.	Process Steam	GT Injec.	Proc. Water	Electric Output
2316	511	1446	38840	26395	100405	0	0	3114	46748

Zero enthalpy: dry gases & liquid water @ 32 F (273.15 K)
Heat Balance Error = In - Out =-.875 BTU/s = 0 %

HRSG GAS-SIDE PROFILE

	Tg F	Tw F HP/IP	DT F HP/IP	Qg/UA F	DELTA P inch H2O	UA BTU/s-F	Qg BTU/s	Vg ft/s	Tube Rows	Lngth ft
1	969.5	941.0	28.5							
				108.0	2.0	205.9	22243.0	56.9	7.9	3.3
	854.5	582.1	272.4							
2	854.5	582.1	272.4							
				96.7	3.2	492.6	47611.8	49.3	14.9	6.2
	602.1	582.1	20.0							
3	602.1	562.1	40.0							
3	602.1	582.1	20.0							
				68.7	1.5	235.7	16198.5	42.2	8.0	3.3
	514.2	399.8	114.3							
	514.2	399.8	114.3							
4	514.2	399.8	114.3							
4	514.2	399.8	114.3							
				126.9	0.3	45.0	5708.2	39.7	1.5	0.6
	483.0	342.5	140.4							
	483.0	342.5	140.4							
5	483.0	342.5	140.4							
				93.2	0.8	160.5	14965.6	37.4	5.1	2.1
	400.5	342.5	58.0							
6	400.5	342.5	58.0							
6	400.5	322.5	78.0							
				84.7	0.7	137.9	11684.8	34.3	4.7	2.0
	335.6	221.1	114.5							
	335.6	220.1	115.5							
7	335.6	220.0	115.6							
				91.7	0.4	86.2	7911.5	32.1	2.8	1.2
	291.4	220.0	71.4							
8	291.4	150.0	141.4							
				152.7	0.2	46.0	7024.2	30.3	1.6	0.7
	252.0	87.5	164.5							

Duct burner fuel= 0 kpph
Gas mole composition: 75.2 %N2+Ar 13.8 %O2 5.35 %CO2 5.67 %H2O .002 %SO2
Flue gas dew point = 96 F M.W.= 28.9

HRSG TOTALS	Economisers	Evaporators	Superheaters	TOTAL
Q BTU/s	38114	69791	24122	132027
UA BTU/s-F	431	739	239	1410
A sq.ft	188560	295585	119529	603674

Prime surface= 35115 fin surface= 568558 sq.ft. Averaged fin eff.= .728
HRSG frontal area = 858 sq.ft. Gas mass flux= 5.9 kpph/sq.ft
HRSG length = 19.4 ft, 46.5 tube rows, 2059 ft of tubes per row.
2 in dia. tubes with serrated fins, staggered arrangement.
Fin thickness/dia.= .03 , height/dia.= .4 , spacing/dia.= .07
Tube transverse pitch/dia.= 2.5 , row longitudinal pitch/dia.= 2.5

ABB GT 11N

Water cooling

air to coal ratio	2.41	air pressure	184	Cp air	0.248
water coal ratio	0.139	air temperature	693	Cp water	1.000
air to water ratio	17.34	water temperature	80	Cp steam	0.455

	lb	wt %	mols	mol %	partial pressure
air	17.34	94.55%	0.60	91.57%	168.48
water	1.00	5.45%	0.06	8.43%	15.52

sat temp 214.6

Temperature of combined stream entering boost compressor

400.19 F sat pressure 247 psia Rel. Hum. 6.28%

Temperature of stream exiting compressor (85% comp eff)

Tf = Ti + (Ti/n*{(Pf/Pi)^((k-1)/k)-1})

where
Ti - inlet temperature - 400.19 F - 860.19 R
n - efficiency - 85.00%
k - ratio of specific heat @ constant pressure to specific
to specific heat @ constant volume 1.384
Pf - final pressure 350 psia
Pi - initial pressure 184 psia

Tf = 597.84 F

	A	B	C	D	E	F	G	H	I	J	K	L	M	N	O
1	Standardized IGCC Gasifier Utility Application													Reference Coal -	
2	Mass & Energy Balance					ABB GT 11N		Plant		Full Load				Predicted Gasifier Out	
3	Stream No.			1		2		3		4				5	
4	Identification			AR Coal		Coal Fines		Sized Coal		CompAir@	2.41	A/C		Water @	0.26
5	From			Illinois #6		Sizer @	30%	Combined Streams		Aux Compr &/or Booster Compr				Cooling Water	H2O/
6	To			Sizer		Briquetting		Gasifier		Gasifier				Gasifier	Coal
7	Gas	Mol Wt		lb/hr	wt %	lb/hr	wt %	lb/hr	wt %	lb/hr	lb/mol	wt %	mol%	lb/hr	
8															
9	CO	28.010								0	0.00	0.00	0.00		
10	H2	2.016								0	0.00	0.00	0.00		
11	CO2	44.010								110	0.01	0.05	0.03		
12	H2O	18.015								1,482	0.18	0.64	1.02	25,144	
13	CH4	16.042								0	0.00	0.00	0.00		
14	C2H6	30.068								0	0.00	0.00	0.00		
15	H2S	34.076								0	0.00	0.00	0.00		
16	COS	60.070								0	0.00	0.00	0.00		
17	N2	28.013								174,857	21.65	75.03	77.28		
18	Ar	39.948								3,061	0.38	1.31	0.95		
19	HCl	36.461								0	0.00	0.00	0.00		
20	HCN	27.026								0	0.00	0.00	0.00		
21	NH3	17.030								0	0.00	0.00	0.00		
22	CS2	76.131								0	0.00	0.00	0.00		
23	SO2	64.059								0	0.00	0.00	0.00		
24	NO	30.006								0	0.00	0.00	0.00		
25	O2	31.999								53,553	6.63	22.98	20.72		
26	NaCl	58.497								0	0.00	0.00	0.00		
27	KCl	74.596								0	0.00	0.00	0.00		
28	Total Gas (lb/hr)									233,064	28.86	100.00	100.00	25,144	
29															
30	Volumetric Flow Rates (STP 14.7 psia, 59F)														
31	(acfm)									4,366					
32	(scfm)									50,996					
33															
34	Heat (BTU/lb)													1332	
35	Cp (BTU/lb F)									0.251					
36	HHV (BTU/lb)			10,776		10,776		10,776		0					
37	LHV (BTU/lb)			10,239		10,239		10,260		0					
38	Sensible Heat above														
39	59 F Btu/lb steam			0		0		0		135					
40	Latent Heat of														
41	Water Btu/lb steam									7					
42															
43	Chemical Heat			990.19		297.06		1031.98		0.00					
44	(LHV) MBtu/hr														
45	Sensible Heat			0.00		0.00		0.00		31.50					
46	above 59 F MBtu/hr														
47	Latent Heat			51.93		15.58		51.93		1.54					
48	of Water MBtu/hr														
49	TotalHeat(MBtu/hr)			1042.11		312.63		1083.90		33.04				33.49	
50				Number of Gasifiers for 85% Plant Availability @90% Gasifier Availability,										350	psia
51															
52	C	12.011		58,131	60.11%	17,439	60.11%	61,132	60.78%		30				
53	H	1.008		4,033	4.17%	1,210	4.17%	4,033	4.01%		165			2,794	
54	O	16.000		7,321	7.57%	2,196	7.57%	7,321	7.28%		54,951			22,350	
55	N	14.007		1,141	1.18%	342	1.18%	1,141	1.13%		174,857			25,144	Total
56	S	32.060		2,785	2.88%	836	2.88%	2,785	2.77%		230,003	Total			
57	CL2	35.500		0	0.00%	0	0.00%	0	0.00%		-				
58	H2O	18.016		13,636	14.10%	4,091	14.10%	13,636	13.56%						
59	ZnFe2O4														
60	ZnS														
61	FeS														
62	Fe2O3														
63	ZnO														
64	ASH			9,671	10.00%	2,901	10.00%	10,537	10.48%						
65	Total Solids			96,707	100.01%	29,012	100.01%	100,585	100.00%						
66	Total Flow (pph)			96,707 *		29,012		100,585		233,064				25,144	
67															
68	Total Flow (pps)			26.86		8.06		27.94		64.74				6.98	
69	Pressure (psia)			14.7		14.7		14.7		350 *				350 *	
70	Temperature (F)			59		59		59		598 *				598 *	

J-1538 DE-AC21-89MC26291

Illinois #6

Revision 7

ifier Output 10/16/90

O	P	Q	R	S	T	U	V	W	X	Y	Z	AA	AB	AC	AD
0.26 lr H2O/ Coal	6 Ash Gasifier Ash Silo	Uncomb Carbon 2.69%	7 Fines (Char) Gasifier @ Briquetting	4.00%	8 Tar Gasifier @ HGCU	6.00%	9 Dust(per RTI dia) Final Cyclone Reclaim		Miscellaneous Gasifier Heat Losses		10 Hot Gas with Tars Gasifier HGCU	55 scf/lb of coal N2 in coal to NH3 Conv		90.1%	1
															2
															3
															4
															5
															6
	lb/hr	wt %	lb/hr	wt %	lb/hr	wt %	lb/hr	wt %			lb/hr	lb/mol	wt %	mol %	7
															8
											90,252	6.39	26.26	22.82	9
											4,060	0.29	1.18	14.26	10
											40,388	2.86	11.75	6.50	11
											17,547	1.24	5.11	6.90	12
144											7,374	0.52	2.15	3.26	13
											1,462	0.10	0.43	0.34	14
											2,537	0.18	0.74	0.53	15
											746	0.05	0.22	0.09	16
											174,970	12.39	50.91	44.24	17
											3,061	0.22	0.89	0.54	18
											0	0.00	0.00	0.00	19
											119	0.01	0.03	0.03	20
											1,173	0.08	0.34	0.49	21
											0	0.00	0.00	0.00	22
											0	0.00	0.00	0.00	23
											0	0.00	0.00	0.00	24
											0	0.00	0.00	0.00	25
											0	0.00	0.00	0.00	26
											0	0.00	0.00	0.00	27
											343,690	24.34	100.00	100.00	28
144															29
											343,690				30
											15,409				31
											89,181				32
															33
1332															34
											0.329				35
	0.260		0.260		0.26		0.260				2,588.8				36
	0		10,936		17,329		0				2,375.0				37
	0		10,5[illegible]		16,571		0								38
											349				39
	154		276		276		323								40
											214				41
	0		0		749		0								42
											816.25				43
	22.67		42.30		96.15		0.00								44
											119.84				45
	1.73		1.07		1.60		0.16		60.5 Water/steam jacket						46
											73.51	Gas HHV=	189	Btu/scf	47
	0.00		0.00		4.34		0.00		14.1 Traversing Stirrer			Estimated=	528	Btu/lb	48
											1009.60	Calculated=	533	Btu/lb	49
									74.6 Total			BulkGas=	3.82%	H2O	50
33.49	24.40		43.37		102.10		0.16					Calc Comb Temp (F)	1990		51
psia & 17 tph (typical) Coal each:					Unit Output (MWn)				120.0 MWn						
											56,997	56,997	0.00%		52
	1,564	13.92	3,002	77.60%	5,106	88.00%					8,506	8,507	0.00%		53
2,794			0	0.00%	464	8.00%					96,742	96,742	0.00%		54
2,350			0	0.00%	116	2.00%					175,998	175,998	0.00%		55
5,144 Total			0	0.00%	58	1.00%					2,785	2,786	-0.02%		56
	0	0.00	0	0.00%	58	1.00%			Sub-Totals		340,629	340,629	0.00%		57
			0	0.00%							Sum of Streams	Sum of Gas Constituents	Mass Unbalance		58
			0	0.00%							balance check				59
							439	90							60
							10	2			Cycle Efficiency(g) = 42.73%				61
							29	6			Cycle Efficiency (n) = 39.31%				62
							0	0							63
							10	2							64
							0	0							65
	9,671	86.08	866	22.40%			487	100							66
	11,234	100	3,868	100.00%	5,802	100.00%	487				343,690				67
5,144	11,234		3,868		5,802										68
											95.47				69
6.98	3.12		1.07		1.61		0.14				259				70
350 *	14.7		350 *		350 *		259				1120				
398 *	650		1120		1120		1300								

	AE	AF	AG	AH	AI	AJ	AK	AL	AM	AN	AO	AP	AQ	AR
1	**Standardized IGCC Gasifier Utility Application**											**Reference Coal -**		**Il**
2	**Mass & Energy Balance**			**ABB GT 11N**		**Plant**						**Predicted Gasifier Ou**		
3	**Stream No.**			**11**				**12**			**13**	**14**		
4	**Identification**			**Air**				**Bleed Air**			**Bleed Air**	**Compressor Discharge**		
5	**From**			**Atmosphere**				**Compressor**			**for**	**Compressor**		
6	**To**			**Gas Turbine Compressor**				**Booster Compressor Cooler**			**Coolant**	**Combustor**		
7	**Gas**	**Mol Wt**	**lb/hr**	**lb/mol**	**wt %**	**mol %**	**lb/hr**	**lb/mol**	**wt %**	**mol %**	**lb/hr**	**lb/hr**	**lb/mol**	**wt %**
8														
9	**CO**	28.010	0	0.00	0.00	0.00	0	0.00	0.00	0.00	0	0	0.00	0.00
10	**H2**	2.016	0	0.00	0.00	0.00	0	0.00	0.00	0.00	0	0	0.00	0.00
11	**CO2**	44.010	1,156	0.01	0.05	0.03	110	0.01	0.05	0.03	101	945	0.01	0.05
12	**H2O**	18.015	15,524	0.18	0.64	1.02	1,482	0.18	0.64	1.02	1,358	12,684	0.18	0.64
13	**CH4**	16.042	0	0.00	0.00	0.00	0	0.00	0.00	0.00	0	0	0.00	0.00
14	**C2H6**	30.068	0	0.00	0.00	0.00	0	0.00	0.00	0.00	0	0	0.00	0.00
15	**H2S**	34.076	0	0.00	0.00	0.00	0	0.00	0.00	0.00	0	0	0.00	0.00
16	**COS**	60.070	0	0.00	0.00	0.00	0	0.00	0.00	0.00	0	0	0.00	0.00
17	**N2**	28.013	1,831,924	21.65	75.03	77.28	174,857	21.65	75.03	77.28	160,299	1,496,767	21.65	75.03
18	**Ar**	39.948	32,072	0.38	1.31	0.95	3,061	0.38	1.31	0.95	2,806	26,204	0.38	1.31
19	**HCl**	36.461	0	0.00	0.00	0.00	0	0.00	0.00	0.00	0	0	0.00	0.00
20	**HCN**	27.026	0	0.00	0.00	0.00	0	0.00	0.00	0.00	0	0	0.00	0.00
21	**NH3**	17.030	0	0.00	0.00	0.00	0	0.00	0.00	0.00	0	0	0.00	0.00
22	**CS2**	76.131	0	0.00	0.00	0.00	0	0.00	0.00	0.00	0	0	0.00	0.00
23	**SO2**	64.059	0	0.00	0.00	0.00	0	0.00	0.00	0.00	0	0	0.00	0.00
24	**NO**	30.006	0	0.00	0.00	0.00	0	0.00	0.00	0.00	0	0	0.00	0.00
25	**O2**	31.999	561,059	6.63	22.98	20.72	53,553	6.63	22.98	20.72	49,095	458,412	6.63	22.98
26	**NaCl**	58.497	0	0.00	0.00	0.00	0	0.00	0.00	0.00	0	0	0.00	0.00
27	**KCl**	74.596	0	0.00	0.00	0.00	0	0.00	0.00	0.00	0	0	0.00	0.00
28	**Total Gas (lb/hr)**		2,441,736	28.86	100.00	100.00	233,064	28.86	100.00	100.00	213,660	1,995,012	28.86	100.00
29														
30	**Volumetric Flow Rates (STP 14.7 psia, 59F)**													
31	**(acfm)**		534,264				9,051					77,475		
32	**(scfm)**		534,264				50,996				47,085	436,519		
33														
34	**hgAdiabHeat(BTU/lb)**													
35	**Cp (BTU/lb F)**		0.240				0.254					0.254		
36	**HHV (BTU/lb)**		0.0				0.0					0.0		
37	**LHV (BTU/lb)**		0.0				0.0					0.0		
38	**Sensible Heat**													
39	**above 59 F Btu/lb**		0				161					161		
40	**Latent Heat**													
41	**of Water Btu/lb**		7				7					7		
42														
43	**Chemical Heat**		0.00				0.00					0.00		
44	**(LHV) MBtu/hr**													
45	**Sensible Heat**		0.00				37.53					321.21		
46	**above 59 F MBtu/hr**													
47	**Latent Heat**		16.15				1.54					13.19		
48	**of Water MBtu/hr**													
49	**TotalHeat(MBtu/hr)**		16.15				39.07					334.41		
50												**Parasitic Load**		**10.43**
51														
52	**C**	12.011		315				30			28		258	258
53	**H**	1.008		1,725				165			151		1,409	1,409
54	**O**	16.000		575,700				54,951			50,376		470,374	470,374
55	**N**	14.007		1,831,924				174,857			160,299		1,496,767	1,496,767
56	**S**	32.060		0				0			0		0	0
57	**CL2**	35.500		2,409,664	sub-totals			230,003	sub-totals		210,854	sub-totals	1,968,808	1,968,808
58	**H2O**	18.016												balance check
59	**ZnFe2O4**													
60	**ZnS**													
61	**FeS**													
62	**Fe2O3**													
63	**ZnO**													
64	**ASH**													
65	**Total Solids**													
66	**Total Flow (pph)**		2,441,736				233,064				213,660	1,995,012		
67														
68	**Total Flow (pps)**		678.26 *				64.74			*	59.35	554.17		
69	**Pressure (psia)**		14.7 *				184 *					184		
70	**Temperature (F)**		59 *				693 *					693		

AS | AT | AU | AV | AW | AX | AY | AZ | BA | BB | BC | BD | BE | BF | BG

Illinois #6 — **J-1538** — **DE-AC21-89MC26291** — **10/16/90**

r Output — **Revision 7**

charge		15 Fuel HGCU GT Combustor		%H2S Removed 99.0%		16 Inlet Gas GT Combustor GT Expander			Thrml NO (ppmvd) *Rich/Lean Red. F	25 85%	17 Exhaust Gas Gas Turbine			
%	mol %	lb/hr	mol/hr	wt %	mol %	lb/hr	lb/mol	mols	wt %	mol%	lb/hr	mols/hr	wt %	mol%
0.00	0.00	90,252	3,222	26.38	22.84	0	0.00	0.00	0.00	0.00	0	0.00	0.00	0.00
0.00	0.00	4,010	1,989	1.17	14.10	0	0.00	0.00	0.00	0.00	0	0.00	0.00	0.00
0.05	0.03	40,388	918	11.80	6.51	207,924	2.58	0.0020	8.90	5.86	208,025	4726.76	8.16	5.37
0.64	1.02	19,318	1,072	5.65	7.60	89,232	1.11	0.00	3.82	6.14	90,590	5028.61	3.55	5.71
0.00	0.00	7,374	460	2.16	3.26	0	0.00	0.00	0.00	0.00	0	0.00	0.00	0.00
0.00	0.00	1,462	49	0.43	0.34	0	0.00	0.00	0.00	0.00	0	0.00	0.00	0.00
0.00	0.00	25	1	0.01	0.01	0	0.00	0.00	0.00	0.00	0	0.00	0.00	0.00
0.00	0.00	7	0	0.00	0.00	0	0.00	0.00	0.00	0.00	0	0.00	0.00	0.00
75.03	77.28	174,970	6,246	51.14	44.28	1,672,553	20.73	0.0255	71.56	74.00	1,832,853	65428.65	71.85	74.27
1.31	0.95	3,061	77	0.89	0.54	29,265	0.36	0.00	1.25	0.91	32,071	802.83	1.26	0.91
0.00	0.00	0	0	0.00	0.00	0	0.00	0.00	0.00	0.00	0	0.00	0.00	0.00
0.00	0.00	119	4	0.03	0.03	0	0.00	0.00	0.00	0.00	0	0.00	0.00	0.00
0.00	0.00	1,173	69	0.34	0.49	0	0.00	0.00	0.00	0.00	0	0.00	0.00	0.00
0.00	0.00	0	0	0.00	0.00	0	0.00	0.00	0.00	0.00	0	0.00	0.00	0.00
0.00	0.00	0	0	0.00	0.00	56	0.0007	0.0000	0.0024	0.0011	56	0.87	0.00	0.00
0.00	0.00	0	0	0.00	0.00	454	0.0056	0.0000	0.0194	0.0188	454	15.13	0.02	0.02
0.00	0.00	0	0	0.00	0.00	337,691	4.19	0.0045	14.45	13.08	386,786	12087.43	15.16	13.72
22.98	20.72	0	0	0.00	0.00	0	0.00	0.00	0.00	0.00	0	0.00	0.00	0.00
0.00	0.00	0	0	0.00	0.00	0	0.00	0.00	0.00	0.00	0	0.00	0.00	0.00
0.00	0.00	0	0	0.00	0.00	0	0.00	0.00	0.00	0.00	0	0.00	0.00	0.00
00.00	100.00	342,160	14,106	100.00	100.00	2,337,172	28.97	0.0345	100.00	100.00	2,550,832	88090.28	100.00	100.00
						2,337,175 bal ck					2,550,835	bal ck		
		15,973				195,189					1,491,997			
		89,063				509,424					556,174			
		0.334				0.278					0.267			
		2,548.9				0.0					0.0			
		2,330.0				0.0					0			
		375				533					244			
		219				40					37			
		797.24				0.00					0.00			
		128.14				1246.68					623.55			
		74.88				92.80					94.21			
		1000.26				1339.48	1334.67 bal chk				717.76			
16.43 MWg			Combustion Turbine Output			81.153 MWg					1.04 Turbine Compressor Surge Margin			
258	0.00%		56,449			56,706	56,706	0.00%			56,734	56,734	0.00%	
1,409	0.00%		8,505			9,915	9,915	0.00%			10,066	10,066	0.00%	
470,374	0.00%		98,119			568,493	568,495	0.00%			618,871	618,871	0.00%	
496,767	0.00%		175,998			1,672,765	1,672,765	0.00%			1,833,065	1,833,065	0.00%	
0	0.00%		28			28	28	0.10%			28	28	0.00%	
968,808	0.00%		339,099	sub-total		2,307,907	2,307,910	0.00%	sub-total		2,518,763	2,518,763	0.00%	sub-total
nces check								balance check					balance check	
		342,160				2,337,172					2,550,832			
		95.04				649.21					708.56			
		259				180 *					15.13			
		1180				1,975 *					973 *			

	BH	BI	BJ	BK	BL	BM	BN	BO	BP	BQ	BR	BS
1	**Standardized IGCC Gasifier Utility Application**						**Reference Coal -**			**Illinois #6**		
2	**Mass & Energy Balance**			**ABB GT 11N**			**Predicted Gasifier Output**					
3	Stream No.			18			19	Thrml NO (ppmvd)		25	20	21
4	Identification			Fuel for Supplementary Firing			Flue Gas		SCR Red F	80%	Superheated Steam	Low Pressure Ste
5	From			Gasifier			HRSG		R/L Red F	85%	HRSG	HRSG
6	To			HRSG			Stack		NOx Reburn F	0%	Steam Turbine	Steam Turbine
7	Gas	Mol Wt	lb/hr	lb/mol	wt %	mol%	lb/hr	mols/hr	wt %	mol%	lb/hr	lb/hr
8												
9	CO	28.010	0	6.39	26.26	22.82	0	0.00	0.00	0.00		
10	H2	2.016	0	0.29	1.18	14.26	0	0.00	0.00	0.00		
11	CO2	44.010	0	2.86	11.75	6.50	208,025	4726.76	8.16	5.37		
12	H2O	18.015	0	1.24	5.11	6.90	90,590	5028.61	3.55	5.71		
13	CH4	16.042	0	0.52	2.15	3.26	0	0.00	0.00	0.00		
14	C2H6	30.068	0	0.10	0.43	0.34	0	0.00	0.00	0.00		
15	H2S	34.076	0	0.18	0.74	0.53	0	0.00	0.00	0.00		
16	COS	60.070	0	0.05	0.22	0.09	0	0.00	0.00	0.00		
17	N2	28.013	0	12.39	50.91	44.24	1,832,853	65428.65	71.86	74.28		
18	Ar	39.948	0	0.22	0.89	0.54	32,071	802.83	1.26	0.91		
19	HCl	36.461	0	0.00	0.00	0.00	0	0.00	0.00	0.00		
20	HCN	27.026	0	0.01	0.03	0.03	0	0.00	0.00	0.00		
21	NH3	17.030	0	0.08	0.34	0.49	0	0.00	0.00	0.00		
22	CS2	76.131	0	0.00	0.00	0.00	0	0.00	0.00	0.00	Stack Emissions (lb/MBtu)	
23	SO2	64.059	0	0.00	0.00	0.00	56	0.87	0.00	0.00	0.053	
24	NO	30.006	0	0.00	0.00	0.00	91	3.03	0.00	0.00	0.09	
25	O2	31.999	0	0.00	0.00	0.00	386,786	12087.43	15.17	13.72		
26	NaCl	58.497	0	0.00	0.00	0.00	0	0.00	0.00	0.00		
27	KCl	74.596	0	0.00	0.00	0.00	0	0.00	0.00	0.00		
28	Total Gas (lb/hr)		0	24.34	100.00	100.00	2,550,469	88078.18	100.00	100.00		
29							2,550,471	bal chk				
30	Volumetric Flow Rates (STP 14.7 psia, 59F)											
31	(acfm)		0				762,893					
32	(scfm)		0				556,098					
33												
34	Heat (BTU/lb)										1459.5	
35	Cp (BTU/lb F)		0.334				0.247					
36	HHV (BTU/lb)		2548.9				0.0					
37	LHV (BTU/lb)		2330.0				0					
38	Sensible Heat above											
39	59 F Btu/lb steam		0				48					
40	Latent Heat of											
41	Water Btu/lb steam		0				37					
42												
43	Chemical Heat		0.00				0.00					
44	(LHV) MBtu/hr											
45	Sensible Heat		0.00				121.70					
46	above 59 F MBtu/hr											
47	Latent Heat		0.00				94.21					
48	of Water MBtu/hr											
49	TotalHeat(MBtu/hr)		0.00				215.92				407.28	
50											HRSG Turbine O	
51												
52	C	12.011		0			56,734	56,734	0.00%			
53	H	1.008		0			10,066	10,066	0.00%			
54	O	16.000		0			618,677	618,677	0.00%			
55	N	14.007		0			1,832,895	1,832,895	0.00%			
56	S	32.060		0			28	28	0.00%			
57	CL2	35.500		0	sub-total		2,518,400	2,518,400	0.00%	sub-total		
58	H2O	18.016										
59	ZnFe2O4											
60	ZnS											
61	FeS											
62	Fe2O3											
63	ZnO											
64	ASH											
65	Total Solids											
66	Total Flow (pph)		0				2,550,832				279,058	
67												
68	Total Flow (pps)		0 *				708.56				77.52	
69	Pressure (psia)		259				14.7				1265	
70	Temperature (F)		1180				252 *				935	

BS	BT	BU	BV	BW
	J-1538	DE-AC21-89MC26291		1
	Revision 7		10/16/90	2
21	22	23	24	3
w Pressure Steam	Make Up Water	Sat. Steam	Process Stm	4
HRSG	WaterTreatment	Gasifier	Stm Turbine	5
Steam Turbine	HRSG	Steam Turbine	Process Facility	6
lb/hr	lb/hr	lb/hr	lb/hr	7
				8
				9
				10
				11
				12
				13
				14
				15
				16
				17
				18
				19
				20
				21
				22
				23
				24
				25
				26
				27
				28
				29
				30
				31
				32
				33
1242	48	1204		34
				35
				36
				37
				38
				39
				40
				41
				42
				43
				44
				45
				46
				47
				48
73.77	1.37	60.54		49
SG Turbine Output	49.3	MWg		50
				51
				52
				53
				54
				55
				56
				57
				58
				59
				60
				61
				62
				63
				64
				65
59,393	28,528	59,584	0	66
				67
16.50	7.92	16.55	0.00	68
115	15	350	250	69
432	80	432	420	70

	BX	BY	BZ	CA	CB	CC	CD	CE	CF	CG	CH	CI
1	**Standardized IGCC Gasifier Utility Application**								**Reference Coal -**			**Illinois #6**
2	**Mass & Energy Balance**				**ABB GT 11N**				**Predicted Gasifier Output**			
3	Stream No.		25		26					27		27a
4	Identification		Regen Recycle Loop		Conc SO2 Bleed					Elemental Sulfur		Elemental Sulfur
5	From		Recycle Blower		Regen Loop					Resox Process		DSRP
6	To		Regenerator		SRP					Marketable Byproduct		Marketable Byprod
7	Gas	Mol Wt	lb/hr	wt%	lb/hr	lbs/mol	mols/hr	wt%	mol%	lb/hr	wt%	lb/hr
8												
9	CO	28.010			0	0.00	0.00	0.00	0.00			
10	H2	2.016			0	0.00	0.00	0.00	0.00			
11	CO2	44.010	140	0.05	12	0.02	0.27	0.05	0.04			
12	H2O	18.015	1,751	0.62	146	0.20	8.10	0.62	1.11			
13	CH4	16.042			0	0.00	0.00	0.00	0.00			
14	C2H6	30.068			0	0.00	0.00	0.00	0.00			
15	H2S	34.076			0	0.00	0.00	0.00	0.00			
16	COS	60.070			0	0.00	0.00	0.00	0.00			
17	N2	28.013	211,878	74.87	17,657	24.10	630.30	74.87	86.02			
18	Ar	39.948	0	0.00	0	0.00	0.00	0.00	0.00			
19	HCl	36.461			0	0.00	0.00	0.00	0.00			
20	HCN	27.026			0	0.00	0.00	0.00	0.00			
21	NH3	17.030			0	0.00	0.00	0.00	0.00			
22	CS2	76.131			0	0.00	0.00	0.00	0.00			
23	SO2	64.059	66,149	23.37	5,512	7.52	86.05	23.37	11.74			
24	NO	30.006			0	0.00	0.00	0.00	0.00			
25	O2	31.999	3,073	1.09	256	0.35	8.00	1.09	1.09			
26	NaCl	58.497			0	0.00	0.00	0.00	0.00			
27	KCl	74.596			0	0.00	0.00	0.00	0.00			
28	Total Gas (lb/hr)		282,992	100.00	23,583	32.19	733	100.00	100.00			
29												
30	Volumetric Flow Rates		(STP 14.7 psia, 59 F)									
31	(acfm)		9,948		784							
32	(scfm)		55,514		4,626							
33												
34	Heat (BTU/lb)											
35	Cp (BTU/lb F)		0.240		0.240					0.000		
36	HHV (BTU/lb)											
37	LHV (BTU/lb)											
38	Sensible Heat above											
39	59 F Btu/lb steam											
40	Latent Heat of											
41	Water Btu/lb steam											
42												
43	Chemical Heat									10.97		
44	(LHV) MBtu/hr											
45	Sensible Heat		91.08		7.02					0.00		
46	above 59 F MBtu/hr											
47	Latent Heat		1.82		0.15					0.00		
48	of Water MBtu/hr											
49	TotalHeat(MBtu/hr)		92.90		7.18					10.97		
50												
51												
52	C	12.011										
53	H	1.008										
54	O	16.000										
55	N	14.007										
56	S	32.060								2,756		
57	CL2	35.500										
58	H2O	18.016										
59	ZnFe2O4											
60	ZnS											
61	FeS											
62	Fe2O3											
63	ZnO											
64	ASH				0.00			0				
65	Total Solids											
66	Total Flow (pph)		282,992		23,583					2,756		
67												
68	Total Flow (pps)		78.61		6.55					0.77		
69	Pressure (psia)		294		294					15		
70	Temperature (F)		1400		1300					284		

CI	CJ	CK	CL	CM
#5	J-1538	DE-AC21-89MC26291		1
	Revision 7		10/16/90	2
	27b	28		3
Sulfur	Sulfur Dioxide	Ash		4
P	SO2 Recovery Unit	SO2 Reductor		5
Byproduct	Marketable Byproduct	Disposal		6
	lb/hr	lb/hr	wt%	7
				8
				9
				10
				11
				12
				13
				14
				15
				16
				17
				18
				19
				20
				21
				22
				23
				24
				25
				26
				27
				28
				29
				30
				31
				32
				33
				34
0.000	0.000			35
				36
				37
				38
		154	0	39
				40
				41
				42
10.97	10.97	3.96	0	43
				44
0.00	0.00	0.00	0	45
				46
0.00	0.00	0.00	0	47
				48
10.97	10.97	3.96	0.4	49
				50
				51
		273	3	52
				53
				54
				55
2,756	2,756			56
				57
				58
				59
				60
				61
				62
				63
		9,671	97	64
		9,944	100	65
2,756	5,512	9,944	100	66
				67
0.77	1.53	2.76		68
15	100	15		69
190	39	284		70

200 MW Utility Cycle
Mitsubishi-Westinghouse 501 F

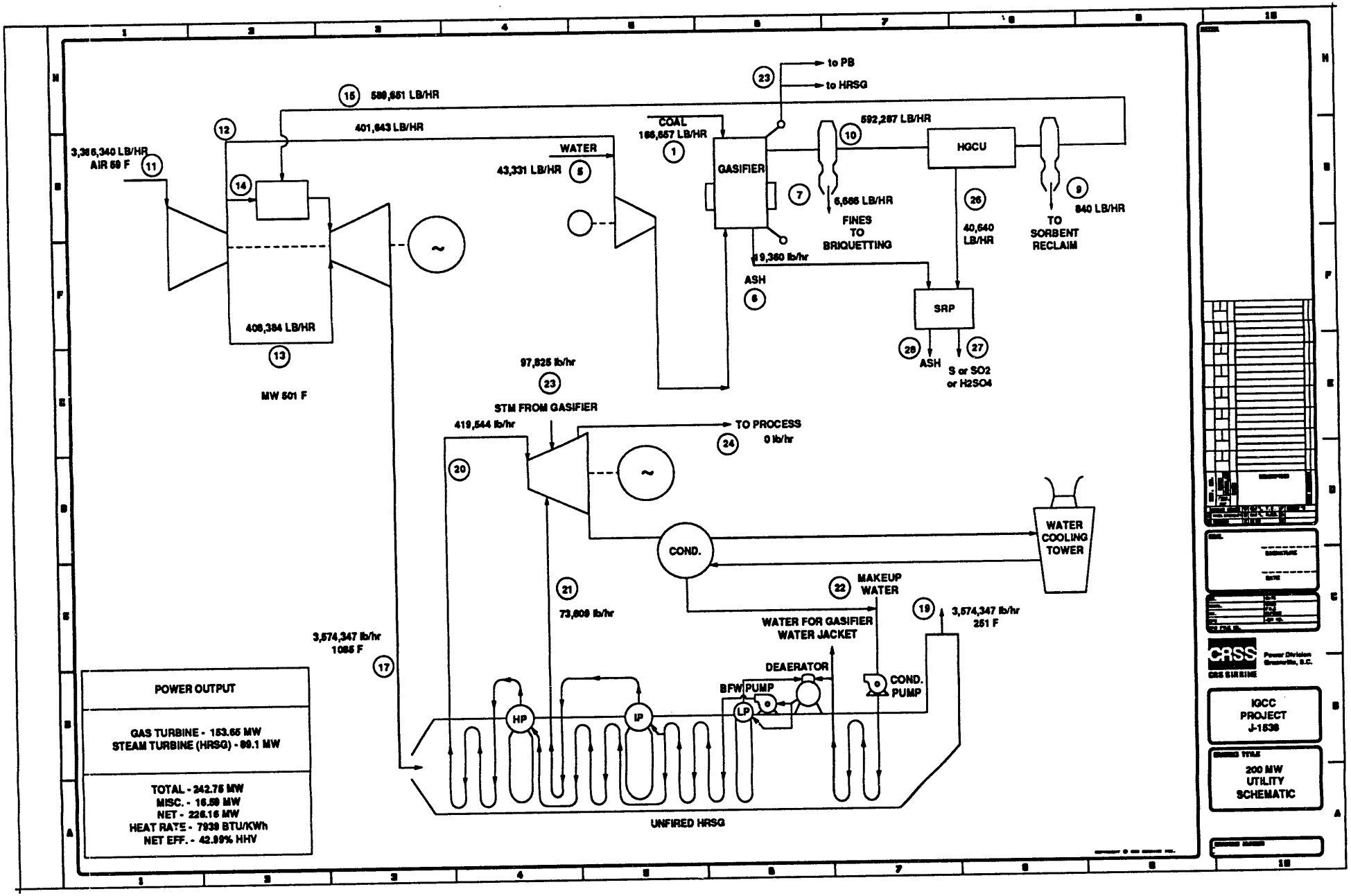
to PB
to HRSG
23
15 589,651 LB/HR
401,643 LB/HR
12
3,386,340 LB/HR
AIR 59 F
11
14
WATER
43,331 LB/HR
5
COAL
166,657 LB/HR
1
GASIFIER
592,287 LB/HR
10
HGCU
7
6,666 LB/HR
FINES
TO
BRIQUETTING
26
40,640
LB/HR
9
840 LB/HR
TO
SORBENT
RECLAIM
19,360 lb/hr
ASH
6
SRP
28
ASH
27
S or SO2
or H2SO4
409,384 LB/HR
13
MW 501 F
97,825 lb/hr
23
STM FROM GASIFIER
419,544 lb/hr
TO PROCESS
24
0 lb/hr
20
COND.
WATER
COOLING
TOWER
21
73,809 lb/hr
22
MAKEUP
WATER
19
3,574,347 lb/hr
251 F
WATER FOR GASIFIER
WATER JACKET
3,574,347 lb/hr
1085 F
17
DEAERATOR
BFW PUMP
COND.
PUMP
HP
IP
LP
UNFIRED HRSG
POWER OUTPUT
GAS TURBINE - 153.65 MW
STEAM TURBINE (HRSG) - 89.1 MW
TOTAL - 242.75 MW
MISC. - 16.59 MW
NET - 226.16 MW
HEAT RATE - 7939 BTU/KWh
NET EFF. - 42.99% HHV
CRSS
Power Division
Greenville, S.C.
CRS SIRIINE
IGCC
PROJECT
J-1536
200 MW
UTILITY
SCHEMATIC

IGCC 58 - 200 MW UTILITY CYCLE
MITSUBISHI-WESTINGHOUSE 501 F

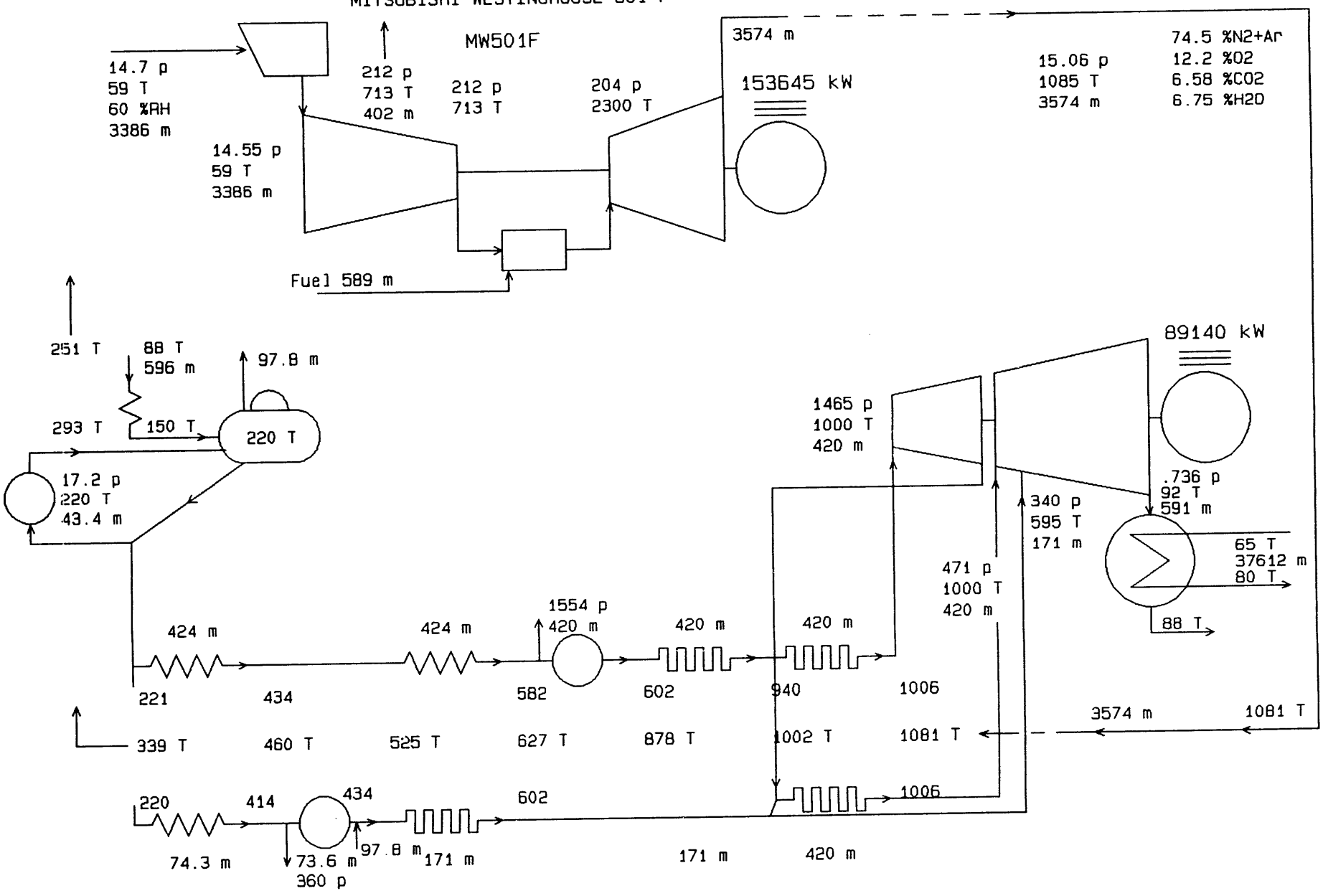

GTPRO 3.31 Michael Brown 10-15-1990 13:39:14
p psia, T F, m kpph

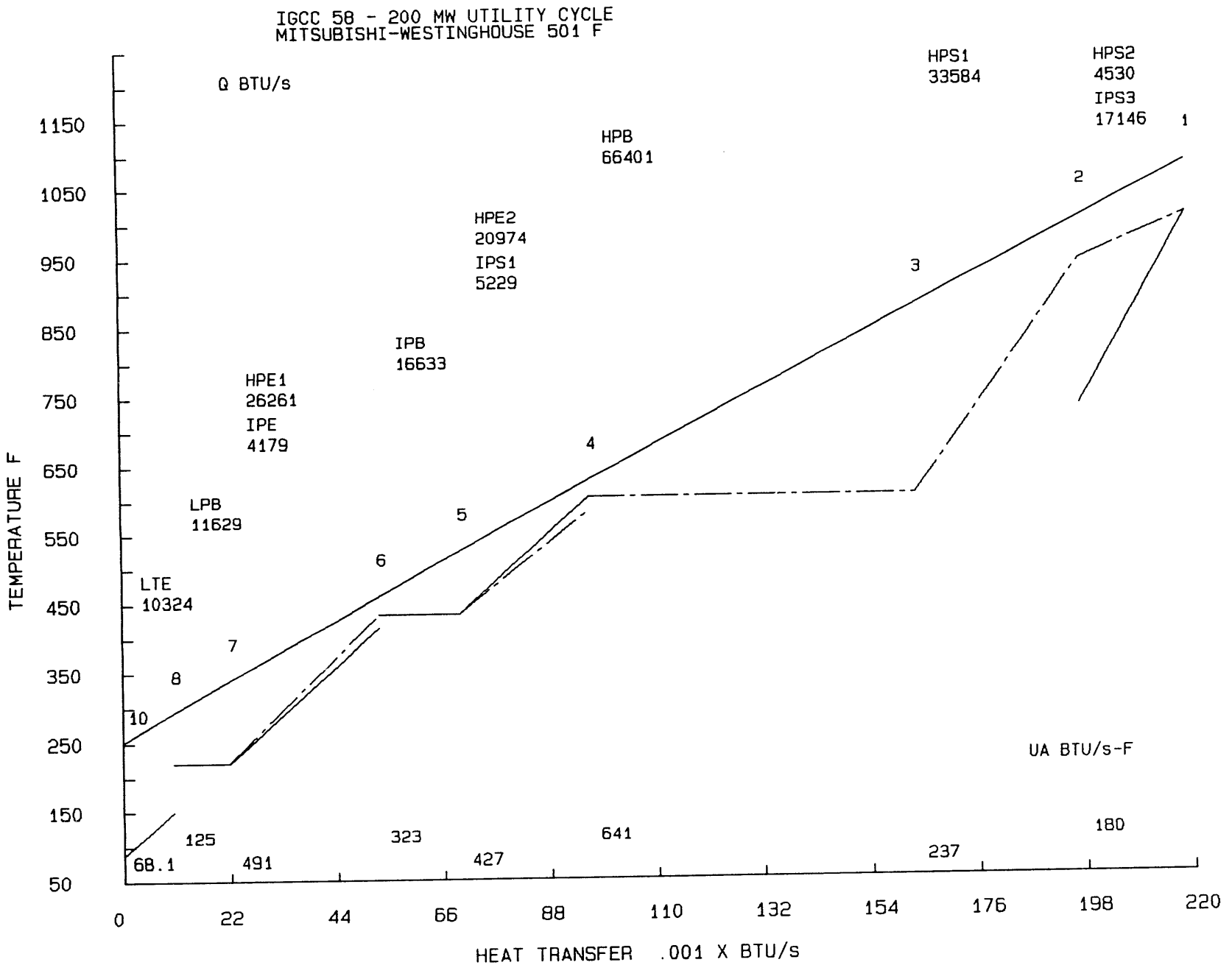

GTPRO 3.31 Michael Brown 10-15-1990 13:39:14

GTPRO 3.31 Michael Brown 10-15-1990 13:38:48
IGCC 58 - 200 MW UTILITY CYCLE
MITSUBISHI-WESTINGHOUSE 501 F

ESTIMATED G.T. SITE PERFORMANCE

Fuel=Fuel G.T. @ 100 % rating, XIGV= 0
Site ambient conditions: 14.7 psia, 59 F, 60 % RH
Inlet loss= 4 inch H2O, exhaust loss= 10 inch H2O
Evap. inlet cooler to 0 % RH.

G.T. DEVIATION FROM NOMINAL, CLEAN ENGINE

Compressor inlet airflow % reduction = 0
Compressor efficiency reduction % = 0
Turbine efficiency reduction % = 0
Maximum firing temperature excess over base load = 0 F
Combustor % pressure loss (0 means nominal value) = 0
Combustor inefficiency + heat loss % (0 means nominal value) = 0
Cooling air increase % (0 means nominal value) = 0
Process air bleed location (0 means none) = 1
Process air bleed % of inlet = 11.86

#	Model	PR	TIT F	TET F	Mair kpph	kWe	H.R.LHV BTU/kWh	Mex kpph	N2+Ar %	O2 %	CO2 %	H2O %
	MW501F	14.6	2300	1085	3386	153645	10376	3574	74.50	12.17	6.58	6.75

Fuel flow = 589 kpph
G.T. auxillary power = 762 kWe.

ESTIMATED G.T. CYCLE

STREAM	TEMP. F	PRESS. psia	MASSFLOW kpph	M.W.	MOLE COMPOSITION % N2+Ar	O2	CO2	H2O
Ambient air in	59	14.70	3386.37	28.75	78.22	20.74	0.03	1.01
Compr. inlet	59	14.55	3386.37	28.75	78.22	20.74	0.03	1.01
Turbine coolant	misc.		408.37					
Process air bld	713	212.28	401.62	28.75	78.22	20.74	0.03	1.01
Compr. disch.	713	212.28	2576.38	28.75	78.22	20.74	0.03	1.01
Turbine inlet	2300	203.79	3166.03	28.90	74.02	11.05	7.43	7.50
Turbine exhaust	1085	15.06	3574.40	28.88	74.50	12.17	6.58	6.75

Compressor= 159812 Turbine= 316579 Mech. loss= 940 kW
Turbine coolant= 12.1 % compr in
GT specific power @ gen term= 45.4 kW per kpph
GT efficiency @ gen term= 30.26 % HHV = 32.89 % LHV

GAS TURBINE/GENERATOR HEAT BALANCE

Energy in = 493736 BTU/s

Inlet air Sensible	Inlet air Latent	Water Inj.	Steam Inj.	Fuel HHV
6194	6263	0	0	481280

Energy out = 496446 BTU/s

Incompl comb & carcass rad	GT Mech. Losses	Gearbox Loss	Generator Loss	Exhaust Sensible	Exhaust Latent	Electric Output	Proc Air
9899	597	0	2080	274646	43964	145636	19624

Zero enthalpy: dry gases & liquid water @ 32 F (273.15 K)
Heat Balance Error = In - Out =-2710 BTU/s =-.549 %

GTPRO 3.31 Michael Brown 10-15-1990 13:38:54 Steam cycle p.1
IGCC 58 - 200 MW UTILITY CYCLE
MITSUBISHI-WESTINGHOUSE 501 F
Type: 10 Subtype: 3 Induction

	P psia	T F	h BTU/lb	m kpph	UA BTU/s-F	Q BTU/s	A sq.ft
Cnd rtrn	0.74	87.57	55.58	590.984			
Makeup	17.72	80.00	48.02	4.932			
FW supl	17.72	87.51	55.51	595.916			
LTE				595.916	68	10324	33314
from LTE	17.20	150.00	117.88	595.916			
LPB				43.364	125	11629	56123
water bleed				97.830			
htd. FW	17.20	220.00	188.13	498.086			
HPFW	1648.87	221.31	194.33	423.739			
HPE1				423.739	436	26261	204068
6	1600.84	434.18	417.45	0.000			
HPE2				423.739	324	20974	145993
7	1577.53	581.98	595.64	0.000			
HPE3				423.739	0	0	0
8	1554.22	581.98	595.64	0.000			
Blwdn	1554.22	601.98	619.75	4.195			
HPB				419.544	641	66402	264798
9	1554.22	601.98	1165.18	0.000			
HPS1				419.544	237	33584	123713
10	1508.95	940.05	1453.36	0.000			
HPS2				419.544	67	4530	34734
11	1508.95	1006.00	1492.23	0.000			
Into HPT	1465.00	1000.00	1490.10	419.544			
R/H extr	500.00	729.39	1375.23	419.544			
stm addn	500.00	650.00	1331.99	0.000			
cold R/H	500.00	729.39	1375.23	419.544			
into HPT	471.30	1000.00	1519.55	419.544			
HPT exit	339.81	924.63	1483.59	419.544			
IPFW	371.32	220.29	189.48	74.347			
IPE				74.347	55	4179	25719
1	360.50	414.18	391.86	0.000			
Blwdn	360.50	434.18	412.73	0.736			
IPB				73.611	323	16633	139054
Stm addn	360.50	434.18	1205.09	97.830			
2	360.50	434.18	1205.09	0.000			
IPS1				171.441	103	5229	56653
3	350.00	601.98	1314.90	0.000			
IPS2				171.441	0	0	0
4	350.00	601.98	1314.90	0.000			
cold R/H	500.00	729.39	1375.23	419.544			
IPS3				419.544	113	17146	58572
5	485.44	1006.00	1522.36	0.000			
Into LPT	339.81	828.87	1433.78	590.984			
LPT exit	0.74	91.57	1010.24	590.984			

STEAM TURBINE

	No. of steps	Exit Quality	Efficiency(%)	Work (kW)
To HPT exit	1	1.349	72.75	18543
To LPT exit	15	0.912	06.64	73353

Gross power = 91896 kW. Mech/Elect losses = 2757 kW.
Generator output = 89140 kWe. ST auxiliaries = 624 kWe
Boiler feedpumps = 894 kWe

CONDENSER

	P psia	T F	h BTU/lb	m kpph
LPT exit	0.7365	91.57	1010.24	590.98
Saturation	0.7365	91.57		
Condensate well	0.7365	87.57	55.58	590.98
Cooling water in		65.00		37612.85
Cooling water out		80.00		37612.85

mber of passes= 1 UA= 8698 BTU/s-F Surface area = 42546 sq.ft
bes: OD = 1 in Length= 38.6 ft number= 4214
Cooling water: Velocity= 9 ft/s DP = 9.02 psia Pumps = 424 kWe.

STEAM CYCLE HEAT BALANCE

Energy in = 352181 BTU/s

GT Exhaust Sensible	GT Exhaust Latent	Duct Burner Fuel HHV	Makeup+Proc Return	Pump Work	External Steam
274646	43964	0	66	758	32748

Energy out = 352039 BTU/s

Heat Radiated	Blow down	Mech/Elec Losses	Stack Sens.	Stack Latent	Condnsr C.W.	Process Steam	GT Injec.	Proc. Water	Electric Output
3862	807	2613	54468	43964	156720	0	0	5113	84493

Zero enthalpy: dry gases & liquid water @ 32 F (273.15 K)
Heat Balance Error = In - Out = 142 BTU/s = .04 %

HRSG GAS-SIDE PROFILE

Gas	Tg F	Tw F HP/IP	DT F HP/IP	Qg/UA F	DELTA P inch H2O	UA BTU/s-F	Qg BTU/s	Vg ft/s	Tube Rows	Lngth ft
1	1080.8	1006.0	74.8							
1	1080.8	1006.0	74.8							
				121.4	1.1	180.4	21893.5	55.2	4.6	1.9
	1001.9	940.1	61.9							
	1001.9	729.4	272.6							
2	1001.9	940.1	61.9							
				143.3	1.3	236.8	33920.2	51.5	6.0	2.5
	878.1	602.0	276.2							
3	878.1	602.0	276.2							
				104.6	2.3	641.4	67066.0	44.6	12.9	5.4
	627.0	602.0	25.0							
4	627.0	582.0	45.0							
4	627.0	602.0	25.0							
				62.0	1.5	427.1	26465.6	38.1	9.9	4.1
	525.4	434.2	91.2							
	525.4	434.2	91.2							
5	525.4	434.2	91.2							
				52.0	0.9	323.3	16799.1	35.0	6.8	2.8
	460.2	434.2	26.0							
6	460.2	434.2	26.0							
6	460.2	414.2	46.0							
				62.7	1.4	490.7	30745.3	31.6	11.2	4.7
	339.4	221.3	118.1							
	339.4	220.3	119.1							
7	339.4	220.0	119.4							
				94.2	0.3	124.7	11744.9	28.5	2.7	1.1
	292.8	220.0	72.8							
8	292.8	150.0	142.8							
				153.1	0.2	68.1	10427.5	26.9	1.6	0.7
	251.3	87.5	163.8							

Duct burner fuel= 0 kpph
Gas mole composition: 74.5 %N2+Ar 12.2 %O2 6.58 %CO2 6.75 %H2O .002 %SO2
Flue gas dew point = 101 F M.W.= 28.9

HRSG TOTALS	Economisers	Evaporators	Superheaters	TOTAL
Q BTU/s	61739	94663	60490	216893
UA BTU/s-F	883	1089	520	2492
A sq.ft	409094	459975	273673	1142742

Prime surface= 66473 fin surface= 1076268 sq.ft. Averaged fin eff.= .731
HRSG frontal area = 1354 sq.ft. Gas mass flux= 5.24 kpph/sq.ft
HRSG length = 23.3 ft, 55.8 tube rows, 3249 ft of tubes per row.
2 in dia. tubes with serrated fins, staggered arrangement.
Fin thickness/dia.= .03 , height/dia.= .4 , spacing/dia.= .07
Tube transverse pitch/dia.= 2.5 , row longitudinal pitch/dia.= 2.5

MW 501 F

Water cooling

air to coal ratio	2.41	air pressure	212	Cp air	0.248
water coal ratio	0.148	air temperature	713	Cp water	1.000
air to water ratio	16.28	water temperature	80	Cp steam	0.455

	lb	wt %	mols	mol %	partial pressure
air	16.28	94.21%	0.57	91.07%	193.07
water	1.00	5.79%	0.06	8.93%	18.93

sat temp 224.7

Temperature of combined stream entering boost compressor

399.90 F sat pressure 247 psia Rel. Hum. 7.66%

Temperature of stream exiting compressor (85% comp eff)

Tf = Ti + (Ti/n*{(Pf/Pi)^((k-1)/k)-1})

where
Ti - inlet temperature - 399.90 F - 859.90 R
n - efficiency - 85.00%
k - ratio of specific heat @ constant pressure to specific
to specific heat @ constant volume 1.384
Pf - final pressure 350 psia
Pi - initial pressure 212 psia

Tf = 550.88 F

	A	B	C	D	E	F	G	H	I	J	K	L	M	N	O
1	Standardized IGCC Gasifier Utility Application														Reference Coal -
2	Mass & Energy Balance					MW 501 F			Plant		Full Load				Predicted Gasifier Out
3	Stream No.			1		2		3			4			5	
4	Identification			AR Coal		Coal Fines		Sized Coal		CompAir@	2.41 A/C			Water @	0.26
5	From			Illinois #6		Sizer @	30%	Combined Streams		Aux Compr	&/or Booster Compr			Cooling Water	H2O/
6	To			Sizer		Briquetting		Gasifier			Gasifier			Gasifier	Coal
7	Gas	Mol Wt		lb/hr	wt %	lb/hr	wt %	lb/hr	wt %	lb/hr	lb/mol	wt %	mol%	lb/hr	
8															
9	CO	28.010								0	0.00	0.00	0.00		
10	H2	2.016								0	0.00	0.00	0.00		
11	CO2	44.010								190	0.01	0.05	0.03		
12	H2O	18.015								2,554	0.18	0.64	1.02	43,331	
13	CH4	16.042								0	0.00	0.00	0.00		
14	C2H6	30.068								0	0.00	0.00	0.00		
15	H2S	34.076								0	0.00	0.00	0.00		
16	COS	60.070								0	0.00	0.00	0.00		
17	N2	28.013								301,335	21.65	75.03	77.28		
18	Ar	39.948								5,276	0.38	1.31	0.95		
19	HCl	36.461								0	0.00	0.00	0.00		
20	HCN	27.026								0	0.00	0.00	0.00		
21	NH3	17.030								0	0.00	0.00	0.00		
22	CS2	76.131								0	0.00	0.00	0.00		
23	SO2	64.059								0	0.00	0.00	0.00		
24	NO	30.006								0	0.00	0.00	0.00		
25	O2	31.999								92,289	6.63	22.98	20.72		
26	NaCl	58.497								0	0.00	0.00	0.00		
27	KCl	74.596								0	0.00	0.00	0.00		
28	Total Gas (lb/hr)									401,643	28.86	100.00	100.00	43,331	
29															
30	Volumetric Flow Rates (STP 14.7 psia, 59F)														
31	(acfm)									7,190					
32	(scfm)									87,882					
33															
34	Heat (BTU/lb)													1308	
35	Cp (BTU/lb F)									0.249					
36	HHV (BTU/lb)			10,776		10,776		10,776		0					
37	LHV (BTU/lb)			10,239		10,239		10,260		0					
38	Sensible Heat above														
39	59 F Btu/lb steam			0		0		0		123					
40	Latent Heat of														
41	Water Btu/lb steam									7					
42															
43	Chemical Heat			1706.41		511.92		1778.42		0.00					
44	(LHV) MBtu/hr														
45	Sensible Heat			0.00		0.00		0.00		49.24					
46	above 59 F MBtu/hr														
47	Latent Heat			89.49		26.85		89.49		2.66					
48	of Water MBtu/hr														
49	TotalHeat(MBtu/hr)			1795.90		538.77		1867.91		51.89				56.68	
50				Number of Gasifiers for 85% Plant Availability @90% Gasifier Availability,										350	psia
51															
52	C	12.011		100,178	60.11%	30,053	60.11%	105,351	60.78%		52				
53	H	1.008		6,950	4.17%	2,085	4.17%	6,950	4.01%		284			4,815	
54	O	16.000		12,616	7.57%	3,785	7.57%	12,616	7.28%		94,697			38,516	
55	N	14.007		1,967	1.18%	590	1.18%	1,967	1.13%		301,335			43,331	Total
56	S	32.060		4,800	2.88%	1,440	2.88%	4,800	2.77%		396,368	Total			
57	CL2	35.500		0	0.00%	0	0.00%	0	0.00%						
58	H2O	18.016		23,499	14.10%	7,050	14.10%	23,499	13.56%						
59	ZnFe2O4														
60	ZnS														
61	FeS														
62	Fe2O3														
63	ZnO														
64	ASH			16,666	10.00%	5,000	10.00%	18,159	10.48%						
65	Total Solids			166,657	100.01%	49,997	100.01%	173,340	100.00%						
66	Total Flow (pph)			166,657 *		49,997		173,340		401,643				43,331	
67															
68	Total Flow (pps)			46.29		13.89		48.15		111.57				12.04	
69	Pressure (psia)			14.7		14.7		14.7		350 *				350 *	
70	Temperature (F)			59		59		59		551 *				551 *	

O	P	Q	R	S	T	U	V	W	X	Y	Z	AA	AB	AC	AD
l -	Illinois #6								J-1538		DE-AC21-89MC26291				1
ifier Output			10/16/90				Revision 7								2
	6	Uncomb	7		8		9				10	55 scf/lb of coal			3
0.26	Ash	Carbon	Fines (Char)		Tar		Dust(per RTI dia)		Miscellaneous		Hot Gas with Tars				4
ter H2O/	Gasifier	2.69%	Gasifier @	4.00%	Gasifier @	6.00%	Final Cyclone		Gasifier Heat		Gasifier	N2 in coal			5
r Coal	Ash Silo		Briquetting		HGCU		Reclaim		Losses		HGCU	to NH3 Conv		90.1%	6
	lb/hr	wt %	lb/hr	wt %	lb/hr	wt %	lb/hr	wt %			lb/hr	lb/mol	wt %	mol %	7
															8
											155,532	6.39	26.26	22.82	9
											6,997	0.29	1.18	14.26	10
											69,602	2.86	11.75	6.50	11
3,331											30,240	1.24	5.11	6.90	12
											12,707	0.52	2.15	3.26	13
											2,520	0.10	0.43	0.34	14
											4,372	0.18	0.74	0.53	15
											1,286	0.05	0.22	0.09	16
											301,529	12.39	50.91	44.24	17
											5,275	0.22	0.89	0.54	18
											0	0.00	0.00	0.00	19
											205	0.01	0.03	0.03	20
											2,022	0.08	0.34	0.49	21
											0	0.00	0.00	0.00	22
											0	0.00	0.00	0.00	23
											0	0.00	0.00	0.00	24
											0	0.00	0.00	0.00	25
											0	0.00	0.00	0.00	26
											0	0.00	0.00	0.00	27
3,331											592,287	24.34	100.00	100.00	28
															29
											592,287				30
											23,939				31
											153,688				32
															33
1308															34
	0.260		0.260		0.26		0.260				0.329				35
	0		10,936		17,329		0				2,588.8				36
	0		10,936		16,571		0				2,375.0				37
															38
	154		276		276		323				349				39
															40
	0		0		749		0				214				41
															42
	39.07		72.90		165.71		0.00				1406.66				43
															44
	2.97		1.84		2.76		0.27		99.4 Water/steam		206.52				45
									jacket						46
	0.00		0.00		7.49		0.00		23.2 Traversing		126.68	Gas HHV=	189	Btu/scf	47
									Stirrer			Estimated=	628	Btu/lb	48
56.68	42.05		74.74		175.95		0.27		122.6 Total		1739.86	Calculated=	639	Btu/lb	49
psia & 17 tph (typical) Coal each:				6.9		Unit Output (MWn)			226.2 MWn			BulkGas=	4.68%	H2O	50
												Calc Comb Temp (F)		2340	51
	2,695	13.92	5,173	77.60%	8,799	88.00%					97,535	97,534	0.00%		52
4,815			0	0.00%	800	8.00%					14,659	14,660	0.00%		53
8,516			0	0.00%	200	2.00%					166,717	166,718	0.00%		54
3,331 Total			0	0.00%	100	1.00%					303,301	303,300	0.00%		55
	0	0.00	0	0.00%	100	1.00%					4,800	4,801	-0.02%		56
			0	0.00%						Sub-Totals	587,012	587,012	0.00%		57
			0	0.00%							Sum of	Sum of Gas	Mass		58
							756	90			Streams	Constituents	Unbalance		59
							17	2			balance check				60
							50	6			Cycle Efficiency(g) = 46.14%				61
							0	0			Cycle Efficiency (n) = 42.99%				62
							17	2							63
	16,666	86.08	1,493	22.40%			0	0							64
	19,360	100	6,666	100.00%	9,999	100.00%	840	100							65
3,331	19,360		6,666		9,999		840				592,287				66
															67
12.04	5.38		1.85		2.78		0.23				164.52				68
350 *	14.7		350 *		350 *		287				287				69
551 *	650		1120		1120		1300				1120				70

	AE	AF	AG	AH	AI	AJ	AK	AL	AM	AN	AO	AP	AQ	AR
1	**Standardized IGCC Gasifier Utility Application**											**Reference Coal - I**		
2	**Mass & Energy Balance**		**MW 501 F**				**Plant**					**Predicted Gasifier Ou**		
3	Stream No.		11				12				13	14		
4	Identification		Air				Bleed Air				Bleed Air	Compressor Discharg		
5	From		Atmosphere				Compressor				for	Compressor		
6	To		Gas Turbine Compressor				Booster Compressor Cooler				Coolant	Combustor		
7	Gas	Mol Wt	lb/hr	lb/mol	wt %	mol %	lb/hr	lb/mol	wt %	mol %	lb/hr	lb/hr	lb/mol	wt %
8														
9	CO	28.010	0	0.00	0.00	0.00	0	0.00	0.00	0.00	0	0	0.00	0.00
10	H2	2.016	0	0.00	0.00	0.00	0	0.00	0.00	0.00	0	0	0.00	0.00
11	CO2	44.010	1,604	0.01	0.05	0.03	190	0.01	0.05	0.03	193	1,220	0.01	0.05
12	H2O	18.015	21,530	0.18	0.64	1.02	2,554	0.18	0.64	1.02	2,596	16,380	0.18	0.64
13	CH4	16.042	0	0.00	0.00	0.00	0	0.00	0.00	0.00	0	0	0.00	0.00
14	C2H6	30.068	0	0.00	0.00	0.00	0	0.00	0.00	0.00	0	0	0.00	0.00
15	H2S	34.076	0	0.00	0.00	0.00	0	0.00	0.00	0.00	0	0	0.00	0.00
16	COS	60.070	0	0.00	0.00	0.00	0	0.00	0.00	0.00	0	0	0.00	0.00
17	N2	28.013	2,540,618	21.65	75.03	77.28	301,335	21.65	75.03	77.28	306,392	1,932,891	21.65	75.03
18	Ar	39.948	44,479	0.38	1.31	0.95	5,276	0.38	1.31	0.95	5,364	33,839	0.38	1.31
19	HCl	36.461	0	0.00	0.00	0.00	0	0.00	0.00	0.00	0	0	0.00	0.00
20	HCN	27.026	0	0.00	0.00	0.00	0	0.00	0.00	0.00	0	0	0.00	0.00
21	NH3	17.030	0	0.00	0.00	0.00	0	0.00	0.00	0.00	0	0	0.00	0.00
22	CS2	76.131	0	0.00	0.00	0.00	0	0.00	0.00	0.00	0	0	0.00	0.00
23	SO2	64.059	0	0.00	0.00	0.00	0	0.00	0.00	0.00	0	0	0.00	0.00
24	NO	30.006	0	0.00	0.00	0.00	0	0.00	0.00	0.00	0	0	0.00	0.00
25	O2	31.999	778,109	6.63	22.98	20.72	92,289	6.63	22.98	20.72	93,838	591,982	6.63	22.98
26	NaCl	58.497	0	0.00	0.00	0.00	0	0.00	0.00	0.00	0	0	0.00	0.00
27	KCl	74.596	0	0.00	0.00	0.00	0	0.00	0.00	0.00	0	0	0.00	0.00
28	Total Gas (lb/hr)		3,386,340	28.86	100.00	100.00	401,643	28.86	100.00	100.00	408,384	2,576,313	28.86	100.00
29														
30	Volumetric Flow Rates (STP 14.7 psia, 59F)													
31	(acfm)		740,948				13,753					88,217		
32	(scfm)		740,948				87,882				89,997	563,710		
33														
34	hgAdiabHeat(BTU/lb)													
35	Cp (BTU/lb F)		0.240				0.255					0.255		
36	HHV (BTU/lb)		0.0				0.0					0.0		
37	LHV (BTU/lb)		0.0				0.0					0.0		
38	Sensible Heat													
39	above 59 F Btu/lb		0				167					167		
40	Latent Heat													
41	of Water Btu/lb		7				7					7		
42														
43	Chemical Heat		0.00				0.00					0.00		
44	(LHV) MBtu/hr													
45	Sensible Heat		0.00				66.89					429.03		
46	above 59 F MBtu/hr													
47	Latent Heat		22.39				2.66					17.04		
48	of Water MBtu/hr													
49	TotalHeat(MBtu/hr)		22.39				69.54					446.07		
50												Parasitic Load		16.59 M
51														
52	C	12.011		437				52			53		333	333
53	H	1.008		2,392				284			288		1,820	1,820
54	O	16.000		798,414				94,697			96,287		607,430	607,430
55	N	14.007		2,540,618				301,335			306,392		1,932,891	1,932,891
56	S	32.060		0				0			0		0	0
57	CL2	35.500		3,341,861	sub-totals			396,368	sub-totals		403,020	sub-totals	2,542,473	2,542,473
58	H2O	18.016											balance check	
59	ZnFe2O4													
60	ZnS													
61	FeS													
62	Fe2O3													
63	ZnO													
64	ASH													
65	Total Solids													
66	Total Flow (pph)		3,386,340				401,643				408,384	2,576,313		
67														
68	Total Flow (pps)		940.65 *				111.57			*	113.44	715.64		
69	Pressure (psia)		14.7 *				212 *					212		
70	Temperature (F)		59 *				713 *					713		

AR	AS	AT	AU	AV	AW	AX	AY	AZ	BA	BB	BC	BD	BE	BF	BG
al - Illinois #6								J-1538			DE-AC21-89MC26291				1
sifier Output				Revision 7										10/16/90	2
		15				16					17				3
sor Discharge		Fuel			%H2S	Inlet Gas		Thrml NO (ppmvd)		25	Exhaust Gas				4
sor		HGCU			Removed	GT Combustor		*Rich/Lean Red. F		85%	Gas Turbine				5
or		GT Combustor			99.0%	GT Expander									6
wt %	mol %	lb/hr	mol/hr	wt %	mol %	lb/hr	lb/mol	mols	wt %	mol %	lb/hr	mols/hr	wt %	mol %	7
															8
0.00	0.00	155,532	5,553	26.38	22.84	0	0.00	0.00	0.00	0.00	0	0.00	0.00	0.00	9
0.00	0.00	6,911	3,428	1.17	14.10	0	0.00	0.00	0.00	0.00	0	0.00	0.00	0.00	10
0.05	0.03	69,602	1,582	11.80	6.51	357,911	3.28	0.0026	11.30	7.45	358,104	8136.88	10.02	6.60	11
0.64	1.02	33,291	1,848	5.65	7.60	148,296	1.36	0.00	4.68	7.54	150,893	8375.96	4.22	6.79	12
0.00	0.00	12,707	792	2.16	3.26	0	0.00	0.00	0.00	0.00	0	0.00	0.00	0.00	13
0.00	0.00	2,520	84	0.43	0.34	0	0.00	0.00	0.00	0.00	0	0.00	0.00	0.00	14
0.00	0.00	44	1	0.01	0.01	0	0.00	0.00	0.00	0.00	0	0.00	0.00	0.00	15
0.00	0.00	13	0	0.00	0.00	0	0.00	0.00	0.00	0.00	0	0.00	0.00	0.00	16
75.03	77.28	301,529	10,764	51.14	44.28	2,235,823	20.48	0.0252	70.62	73.10	2,542,215	90751.26	71.12	73.58	17
1.31	0.95	5,275	132	0.89	0.54	39,114	0.36	0.00	1.24	0.90	44,478	1113.41	1.24	0.90	18
0.00	0.00	0	0	0.00	0.00	0	0.00	0.00	0.00	0.00	0	0.00	0.00	0.00	19
0.00	0.00	205	8	0.03	0.03	0	0.00	0.00	0.00	0.00	0	0.00	0.00	0.00	20
0.00	0.00	2,022	119	0.34	0.49	0	0.00	0.00	0.00	0.00	0	0.00	0.00	0.00	21
0.00	0.00	0	0	0.00	0.00	0	0.00	0.00	0.00	0.00	0	0.00	0.00	0.00	22
0.00	0.00	0	0	0.00	0.00	96	0.0009	0.0000	0.0030	0.0014	96	1.50	0.00	0.00	23
0.00	0.00	0	0	0.00	0.00	789	0.0072	0.0000	0.0249	0.0241	789	26.29	0.02	0.02	24
22.98	20.72	0	0	0.00	0.00	383,939	3.52	0.0036	12.13	10.99	477,777	14930.99	13.37	12.11	25
0.00	0.00	0	0	0.00	0.00	0	0.00	0.00	0.00	0.00	0	0.00	0.00	0.00	26
0.00	0.00	0	0	0.00	0.00	0	0.00	0.00	0.00	0.00	0	0.00	0.00	0.00	27
100.00	100.00	589,651	24,310	100.00	100.00	3,165,963	29.00	0.0345	100.00	100.00	3,574,347	123336.28	100.00	100.00	28
						3,165,968 bal ck					3,574,352	bal ck			29
															30
		24,815				264,161					2,252,233				31
		153,484				689,349					778,706				32
															33
															34
		0.334				0.284					0.267				35
		2,548.9				0.0					0.0				36
		2,330.0				0.0					0				37
															38
		375				636					274				39
															40
		219				49					44				41
															42
		1373.90				0.00					0.00				43
															44
		220.83				2014.96					980.81				45
															46
		129.04				154.23					156.93				47
															48
		1723.77				2169.19	2169.84 bal chk				1137.74				49
d	16.59 MWg		Combustion Turbine Output			153.645 MWg					1.06 Turbine Compressor Surge Margin				50
															51
3	333	0.00%	97,279			97,612	97,612	0.00%			97,665	97,665	0.00%		52
0	1,820	0.00%	14,657			16,477	16,477	0.00%			16,766	16,766	0.00%		53
0	607,430	0.00%	169,091			776,520	776,525	0.00%			872,812	872,812	0.00%		54
1	1,932,891	0.00%	303,300			2,236,191	2,236,191	0.00%			2,542,583	2,542,583	0.00%		55
0	0	0.00%	48			48	48	0.10%			48	48	0.00%		56
3	2,542,473	0.00%	584,376	sub-total		3,126,849	3,126,853	0.00%	sub-total		3,529,873	3,529,873	0.00%	sub-total	57
	balance check							balance check					balance check		58
															59
															60
															61
															62
															63
															64
															65
		589,651				3,165,963					3,574,347				66
															67
		163.79				879.43					992.87				68
		287.3				204 *					15.13				69
		1180				2,300 *					1085 *				70

	BH	BI	BJ	BK	BL	BM	BN	BO	BP	BQ	BR	BS
1	**Standardized IGCC Gasifier Utility Application**						**Reference Coal -**			**Illinois #6**		
2	**Mass & Energy Balance**			**MW 501 F**			**Predicted Gasifier Output**					
3	Stream No.			18			19	Thrml NO (ppmvd)		25	20	21
4	Identification			Fuel for Supplementary Firing			Flue Gas		SCR Red F	80 %	Superheated Steam	Low Pressure St
5	From			Gasifier			HRSG		R/L Red F	85 %	HRSG	HRSG
6	To			HRSG			Stack		NOx Reburn F	0 %	Steam Turbine	Steam Turbi
7	Gas	Mol Wt	lb/hr	lb/mol	wt %	mol %	lb/hr	mols/hr	wt %	mol %	lb/hr	lb/hr
8												
9	CO	28.010	0	6.39	26.26	22.82	0	0.00	0.00	0.00		
10	H2	2.016	0	0.29	1.18	14.26	0	0.00	0.00	0.00		
11	CO2	44.010	0	2.86	11.75	6.50	358,104	8136.88	10.02	6.60		
12	H2O	18.015	0	1.24	5.11	6.90	150,893	8375.96	4.22	6.79		
13	CH4	16.042	0	0.52	2.15	3.26	0	0.00	0.00	0.00		
14	C2H6	30.068	0	0.10	0.43	0.34	0	0.00	0.00	0.00		
15	H2S	34.076	0	0.18	0.74	0.53	0	0.00	0.00	0.00		
16	COS	60.070	0	0.05	0.22	0.09	0	0.00	0.00	0.00		
17	N2	28.013	0	12.39	50.91	44.24	2,542,215	90751.26	71.14	73.59		
18	Ar	39.948	0	0.22	0.89	0.54	44,478	1113.41	1.24	0.90		
19	HCl	36.461	0	0.00	0.00	0.00	0	0.00	0.00	0.00		
20	HCN	27.026	0	0.01	0.03	0.03	0	0.00	0.00	0.00		
21	NH3	17.030	0	0.08	0.34	0.49	0	0.00	0.00	0.00		
22	CS2	76.131	0	0.00	0.00	0.00	0	0.00	0.00	0.00	Stack Emissions (lb/MBtu)	
23	SO2	64.059	0	0.00	0.00	0.00	96	1.50	0.00	0.00	0.053	
24	NO	30.006	0	0.00	0.00	0.00	158	5.26	0.00	0.00	0.09	
25	O2	31.999	0	0.00	0.00	0.00	477,777	14930.99	13.37	12.11		
26	NaCl	58.497	0	0.00	0.00	0.00	0	0.00	0.00	0.00		
27	KCl	74.596	0	0.00	0.00	0.00	0	0.00	0.00	0.00		
28	Total Gas (lb/hr)		0	24.34	100.00	100.00	3,573,716	123315.25	100.00	100.00		
29							3,573,721	bal chk				
30	Volumetric Flow Rates (STP 14.7 psia, 59F)											
31	(acfm)		0				1,066,601					
32	(scfm)		0				778,574					
33												
34	Heat (BTU/lb)										1490.1	
35	Cp (BTU/lb F)		0.334				0.249					
36	HHV (BTU/lb)		2548.9				0.0					
37	LHV (BTU/lb)		2330.0				0					
38	Sensible Heat above											
39	59 F Btu/lb steam		0				48					
40	Latent Heat of											
41	Water Btu/lb steam		0				44					
42												
43	Chemical Heat		0.00				0.00					
44	(LHV) MBtu/hr											
45	Sensible Heat		0.00				170.57					
46	above 59 F MBtu/hr											
47	Latent Heat		0.00				156.93					
48	of Water MBtu/hr											
49	TotalHeat(MBtu/hr)		0.00				327.50				625.16	
50												HRSG Turbine
51												
52	C	12.011		0			97,665	97,665	0.00%			
53	H	1.008		0			16,766	16,766	0.00%			
54	O	16.000		0			872,475	872,475	0.00%			
55	N	14.007		0			2,542,289	2,542,289	0.00%			
56	S	32.060		0			48	48	0.00%			
57	CL2	35.500		0	sub-total		3,529,242	3,529,242	0.00%	sub-total		
58	H2O	18.016										
59	ZnFe2O4											
60	ZnS											
61	FeS											
62	Fe2O3											
63	ZnO											
64	ASH											
65	Total Solids											
66	Total Flow (pph)		0				3,574,347				419,544	
67												
68	Total Flow (pps)		0 *				992.87				116.54	
69	Pressure (psia)		287.3				14.7				1465	
70	Temperature (F)		1180				251 *				1000	

BS	BT	BU	BV	BW
	J-1538	DE-AC21-89MC26291		1
	Revision 7		10/16/90	2
21	22	23	24	3
Low Pressure Steam	Make Up Water	Sat. Steam	Process Stm	4
HRSG	WaterTreatment	Gasifier	Stm Turbine	5
Steam Turbine	HRSG	HRSG	Process Facility	6
lb/hr	lb/hr	lb/hr	lb/hr	7
				8
				9
				10
				11
				12
				13
				14
				15
				16
				17
				18
				19
				20
				21
				22
				23
				24
				25
				26
				27
				28
				29
				30
				31
				32
				33
1204	48	1204		34
				35
				36
				37
				38
				39
				40
				41
				42
				43
				44
				45
				46
				47
				48
88.63	2.32	99.39		49
HRSG Turbine Output	89.1	MWg		50
				51
				52
				53
				54
				55
				56
				57
				58
				59
				60
				61
				62
				63
				64
				65
73,609	48,263	97,825	0	66
				67
20.45	13.41	27.17	0.00	68
350	15	350	250	69
432	80	432	420	70

	BX	BY	BZ	CA	CB	CC	CD	CE	CF	CG	CH	CI
1	Standardized IGCC Gasifier Utility Application								Reference Coal -			Illinois #6
2	Mass & Energy Balance				MW 501 F				Predicted Gasifier Output			
3	Stream No.		25		26					27		27a
4	Identification		Regen Recycle Loop		Conc SO2 Bleed					Elemental Sulfur		Elemental Sulfur
5	From		Recycle Blower		Regen Loop					Resox Process		DSRP
6	To		Regenerator		SRP					Marketable Byproduct		Marketable Byprodu
7	Gas	Mol Wt	lb/hr	wt%	lb/hr	lbs/mol	mols/hr	wt%	mol%	lb/hr	wt%	lb/hr
8												
9	CO	28.010			0	0.00	0.00	0.00	0.00			
10	H2	2.016			0	0.00	0.00	0.00	0.00			
11	CO2	44.010	242	0.05	20	0.02	0.46	0.05	0.04			
12	H2O	18.015	3,018	0.62	252	0.20	13.96	0.62	1.11			
13	CH4	16.042			0	0.00	0.00	0.00	0.00			
14	C2H6	30.068			0	0.00	0.00	0.00	0.00			
15	H2S	34.076			0	0.00	0.00	0.00	0.00			
16	COS	60.070			0	0.00	0.00	0.00	0.00			
17	N2	28.013	365,133	74.87	30,428	24.10	1086.20	74.87	86.02			
18	Ar	39.948	0	0.00	0	0.00	0.00	0.00	0.00			
19	HCl	36.461			0	0.00	0.00	0.00	0.00			
20	HCN	27.026			0	0.00	0.00	0.00	0.00			
21	NH3	17.030			0	0.00	0.00	0.00	0.00			
22	CS2	76.131			0	0.00	0.00	0.00	0.00			
23	SO2	64.059	113,996	23.37	9,500	7.52	148.30	23.37	11.74			
24	NO	30.006			0	0.00	0.00	0.00	0.00			
25	O2	31.999	5,296	1.09	441	0.35	13.79	1.09	1.09			
26	NaCl	58.497			0	0.00	0.00	0.00	0.00			
27	KCl	74.596			0	0.00	0.00	0.00	0.00			
28	Total Gas (lb/hr)		487,686	100.00	40,640	32.19	1263	100.00	100.00			
29												
30	Volumetric Flow Rates		(STP 14.7 psia, 59 F)									
31	(acfm)		17,143		1,352							
32	(scfm)		95,668		7,972							
33												
34	Heat (BTU/lb)											
35	Cp (BTU/lb F)		0.240		0.240					0.000		0
36	HHV (BTU/lb)											
37	LHV (BTU/lb)											
38	Sensible Heat above											
39	59 F Btu/lb steam											
40	Latent Heat of											
41	Water Btu/lb steam											
42												
43	Chemical Heat									18.90		1
44	(LHV) MBtu/hr											
45	Sensible Heat		156.96		12.10					0.00		
46	above 59 F MBtu/hr											
47	Latent Heat		3.14		0.26					0.00		
48	of Water MBtu/hr											
49	TotalHeat(MBtu/hr)		160.10		12.37					18.90		1
50												
51												
52	C	12.011										
53	H	1.008										
54	O	16.000										
55	N	14.007										
56	S	32.060								4,750		
57	CL2	35.500										
58	H2O	18.016										
59	ZnFe2O4											
60	ZnS											
61	FeS											
62	Fe2O3											
63	ZnO											
64	ASH				0.00				0			
65	Total Solids											
66	Total Flow (pph)		487,686		40,640					4,750		
67												
68	Total Flow (pps)		135.47		11.29					1.32		
69	Pressure (psia)		294		294					15		
70	Temperature (F)		1400		1300					284		

	CJ	CK	CL	CM
	J-1538	DE-AC21-89MC26291		1
	Revision 7		10/16/90	2
	27b	28		3
ulfur	Sulfur Dioxide	Ash		4
	SO2 Recovery Unit	SO2 Reductor		5
product	Marketable Byproduct	Disposal		6
	lb/hr	lb/hr	wt%	7
				8
				9
				10
				11
				12
				13
				14
				15
				16
				17
				18
				19
				20
				21
				22
				23
				24
				25
				26
				27
				28
				29
				30
				31
				32
				33
				34
0.000	0.000			35
				36
				37
				38
		154	0	39
				40
				41
				42
18.90	18.90	6.83	0	43
				44
0.00	0.00	0.00	0	45
				46
0.00	0.00	0.00	0	47
				48
18.90	18.90	6.83	0.4	49
				50
				51
		471	3	52
				53
				54
				55
4,750	4,750			56
				57
				58
				59
				60
				61
				62
				63
		16,666	97	64
		17,136	100	65
4,750	9,500	17,136	100	66
				67
1.32	2.64	4.76		68
15	100	15		69
190	59	284		70

200 MW Utility Cycle
General Electric 7191 F

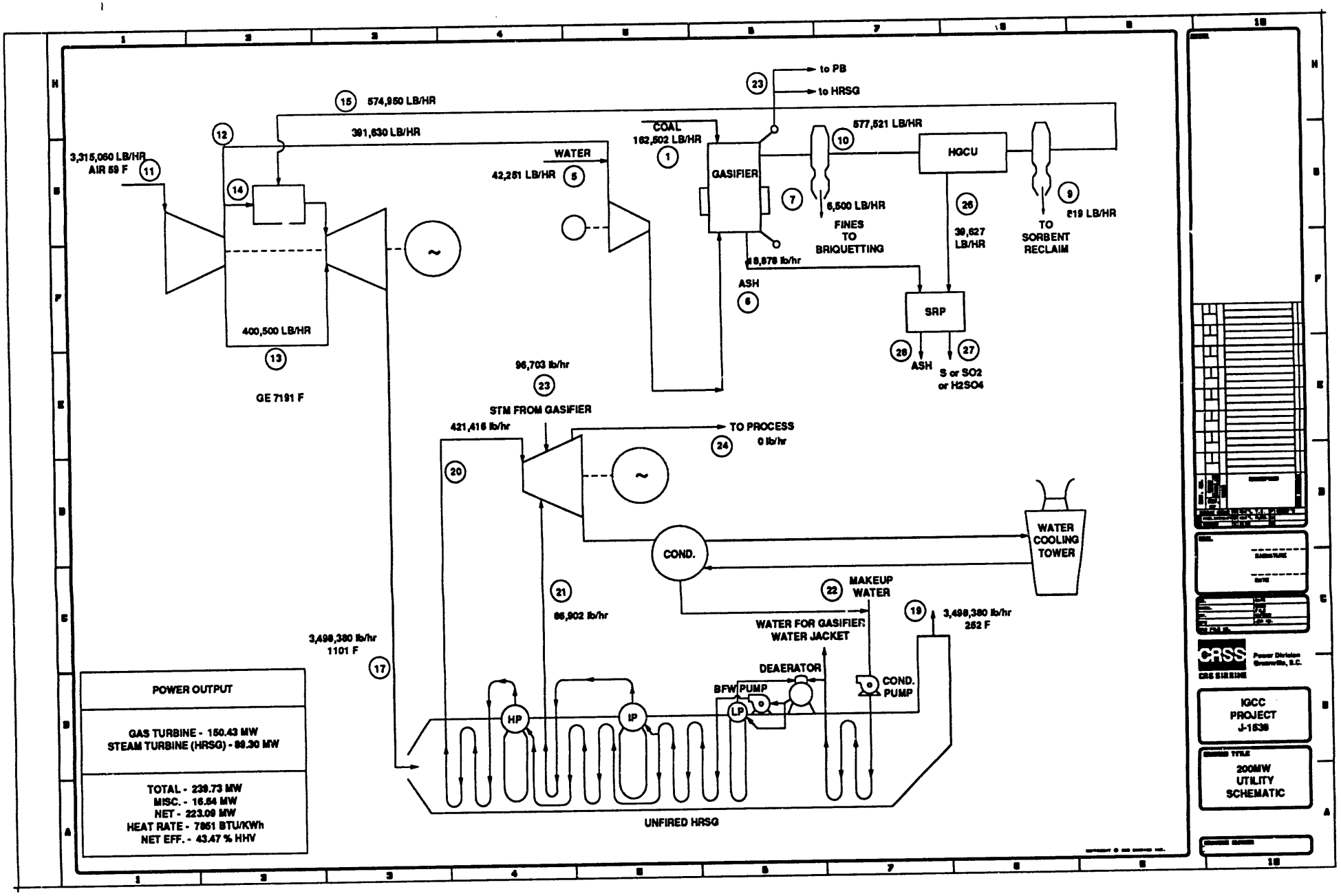
to PB
to HRSG
23
15 574,950 LB/HR
391,630 LB/HR
12
3,315,060 LB/HR
AIR 59 F
11
14
WATER
42,251 LB/HR
5
COAL
162,502 LB/HR
1
GASIFIER
7
577,521 LB/HR
10
HGCU
6,500 LB/HR
FINES
TO
BRIQUETTING
26
39,627
LB/HR
9
619 LB/HR
TO
SORBENT
RECLAIM
18,878 lb/hr
ASH
6
SRP
28
ASH
27
S or SO2
or H2SO4
400,500 LB/HR
13
GE 7191 F
96,703 lb/hr
23
STM FROM GASIFIER
421,416 lb/hr
TO PROCESS
0 lb/hr
24
20
COND.
WATER
COOLING
TOWER
21
86,902 lb/hr
22
MAKEUP
WATER
WATER FOR GASIFIER
WATER JACKET
19
3,498,380 lb/hr
252 F
3,498,380 lb/hr
1101 F
17
DEAERATOR
BFW PUMP
COND.
PUMP
HP
IP
LP
UNFIRED HRSG
POWER OUTPUT
GAS TURBINE - 150.43 MW
STEAM TURBINE (HRSG) - 89.30 MW
TOTAL - 239.73 MW
MISC. - 16.64 MW
NET - 223.09 MW
HEAT RATE - 7851 BTU/KWh
NET EFF. - 43.47 % HHV
CRSS
Power Division
Greenville, S.C.
CRS SIRINE
IGCC
PROJECT
J-1538
200MW
UTILITY
SCHEMATIC

IGCC 57 - 200 MW UTILITY CYCLE
GENERAL ELECTRIC 7191 F

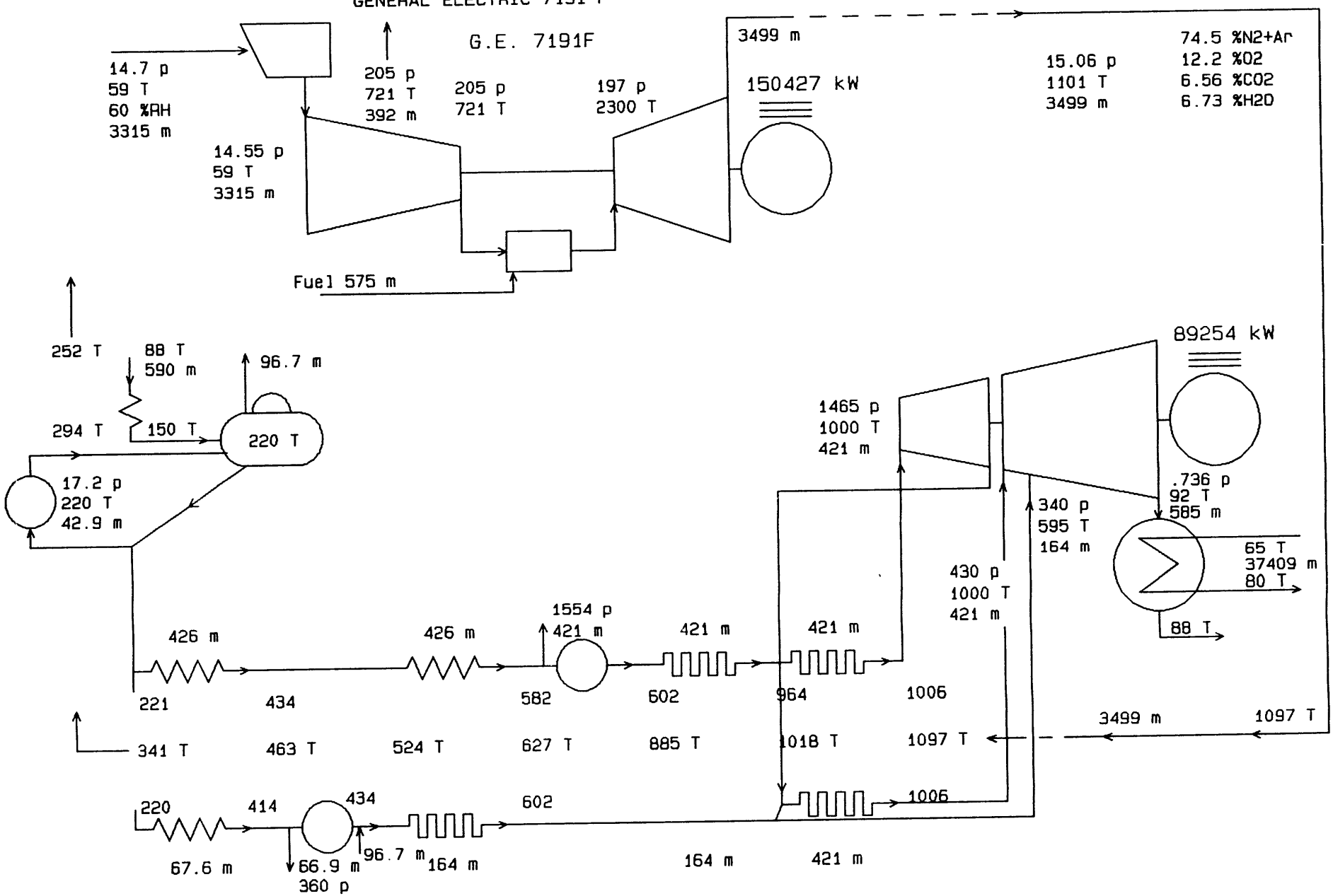

GTPRO 3.31 Michael Brown 10-15-1990 13: 48: 14
p psia, T F, m kpph

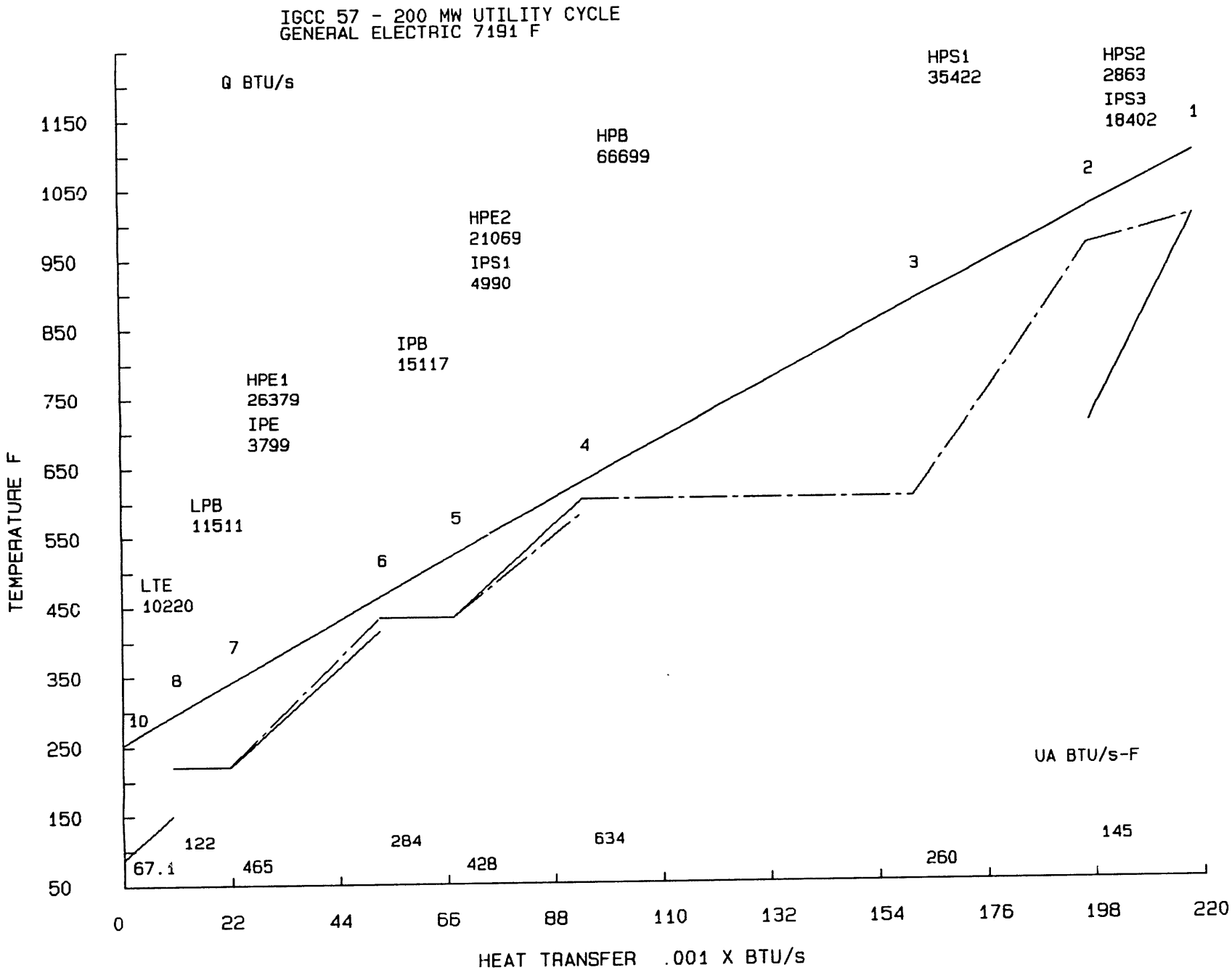

GTPRO 3.31 Michael Brown 10-15-1990 13: 48: 14

GTPRO 3.31 Michael Brown 10-15-1990 13:47:48
IGCC 57 - 200 MW UTILITY CYCLE
GENERAL ELECTRIC 7191 F

ESTIMATED G.T. SITE PERFORMANCE

Fuel=Fuel G.T. @ 100 % rating, XIGV= 0
Site ambient conditions: 14.7 psia, 59 F, 60 % RH
Inlet loss= 4 inch H2O, exhaust loss= 10 inch H2O
Evap. inlet cooler to 0 % RH.

G.T. DEVIATION FROM NOMINAL, CLEAN ENGINE

Compressor inlet airflow % reduction = 0
Compressor efficiency reduction % = 0
Turbine efficiency reduction % = 0
Maximum firing temperature excess over base load = 0 F
Combustor % pressure loss (0 means nominal value) = 0
Combustor inefficiency + heat loss % (0 means nominal value) = 0
Cooling air increase % (0 means nominal value) = 0
Process air bleed location (0 means none) = 1
Process air bleed % of inlet = 11.81

#	Model	PR	TIT F	TET F	Mair kpph	kWe	H.R.LHV BTU/kWh	Mex kpph	N2+Ar %	O2 %	CO2 %	H2O %
1	G.E. 7191F	14.1	2300	1101	3315	150427	10334	3499	74.51	12.20	6.56	6.73

Fuel flow = 575 kpph
G.T. auxillary power = 757 kWe.

ESTIMATED G.T. CYCLE

STREAM	TEMP. F	PRESS. psia	MASSFLOW kpph	M.W.	MOLE COMPOSITION % N2+Ar	O2	CO2	H2O
Ambient air in	59	14.70	3315.07	28.75	78.22	20.74	0.03	1.01
Compr. inlet	59	14.55	3315.07	28.75	78.22	20.74	0.03	1.01
Turbine coolant	misc.		400.51					
Process air bld	721	204.77	391.51	28.75	78.22	20.74	0.03	1.01
Compr. disch.	721	204.77	2523.05	28.75	78.22	20.74	0.03	1.01
Turbine inlet	2300	196.58	3098.00	28.89	74.03	11.09	7.40	7.47
Turbine exhaust	1101	15.06	3498.51	28.88	74.51	12.20	6.56	6.73

Compressor= 158298 Turbine= 311782 Mech. loss= 921 kW
Turbine coolant= 12.1 % compr in
GT specific power @ gen term= 45.4 kW per kpph
GT efficiency @ gen term= 30.38 % HHV = 33.02 % LHV

GAS TURBINE/GENERATOR HEAT BALANCE

Energy in = 481473 BTU/s

Inlet air Sensible	Inlet air Latent	Water Inj.	Steam Inj.	Fuel HHV
6063	6131	0	0	469279

Energy out = 481885 BTU/s

Incompl comb & carcass rad	GT Mech. Losses	Gearbox Loss	Generator Loss	Exhaust Sensible	Exhaust Latent	Electric Output	Proc Air
1295	585	0	2037	273152	42892	142585	19339

Zero enthalpy: dry gases & liquid water @ 32 F (273.15 K)
Heat Balance Error = In - Out =-412 BTU/s =-.086 %

IGCC 57 - 200 MW UTILITY CYCLE
GENERAL ELECTRIC 7191 F
Type: 10 Subtype: 3 Induction

	p psia	T F	h BTU/lb	m kpph	UA BTU/s-F	Q BTU/s	A sq.ft
Cnd rtrn	0.74	87.57	55.58	585.029			
Makeup	17.72	80.00	48.02	4.883			
FW supl	17.72	87.51	55.51	589.912			
LTE				589.912	67	10220	32752
From LTE	17.20	150.00	117.88	589.912			
LPB				42.927	122	11511	54742
Water bleed				96.700			
Intd. FW	17.20	220.00	188.13	493.212			
HPFW	1648.87	221.31	194.33	425.641			
HPE1				425.641	417	26379	194639
6	1600.84	434.18	417.45	0.000			
HPE2				425.641	329	21069	147864
7	1577.53	581.98	595.64	0.000			
HPE3				425.641	0	0	0
8	1554.22	581.98	595.64	0.000			
Blwdn	1554.22	601.98	619.75	4.214			
HPB				421.426	634	66700	261148
9	1554.22	601.98	1165.18	0.000			
HPS1				421.426	260	35423	135356
10	1508.95	964.41	1467.77	0.000			
HPS2				421.426	41	2863	21146
11	1508.95	1006.00	1492.23	0.000			
Into HPT	1465.00	1000.00	1490.10	421.426			
R/H extr	456.25	708.84	1366.34	421.426			
Stm addn	456.25	457.25	1205.59	0.000			
Cold R/H	456.25	708.84	1366.34	421.426			
Into HPT	430.06	1000.00	1520.70	421.426			
HPT exit	339.81	948.70	1496.20	421.426			
IPFW	371.32	220.29	189.48	67.571			
IPE				67.571	48	3799	22542
1	360.50	414.18	391.86	0.000			
Blwdn	360.50	434.18	412.73	0.669			
IPB				66.902	284	15117	122005
Stm addn	360.50	434.18	1205.09	96.700			
2	360.50	434.18	1205.09	0.000			
IPS1				163.602	100	4990	54558
3	350.00	601.98	1314.90	0.000			
IPS2				163.602	0	0	0
4	350.00	601.98	1314.90	0.000			
Cold R/H	456.25	708.84	1366.34	421.426			
IPS3				421.426	104	18402	53779
5	442.96	1006.00	1523.54	0.000			
Into LPT	339.81	849.87	1444.66	585.029			
LPT exit	0.74	91.57	1014.76	585.029			

STEAM TURBINE

	No. of steps	Exit Quality	Efficiency(%)	Work (kW)
To HPT exit	1	1.365	67.78	18310
To LPT exit	15	0.917	86.83	73704

Gross power = 92014 kW. Mech/Elect losses = 2760 kW.
Generator output = 89254 kWe. ST auxiliaries = 625 kWe
Boiler feedpumps = 895 kWe

CONDENSER

	p psia	T F	h BTU/lb	m kpph
LPT exit	0.7365	91.57	1014.76	585.03
Saturation	0.7365	91.57		
Condensate well	0.7365	87.57	55.58	585.03
Cooling water in		65.00		37409.88
Cooling water out		80.00		37409.88

Number of passes= 1 UA= 8651 BTU/s-F Surface area = 42316 sq.ft
Tubes: OD = 1 in Length= 38.6 ft number= 4191
Cooling water: Velocity= 9 ft/s DP = 9.02 psia Pumps = 422 kWe.

STEAM CYCLE HEAT BALANCE

Energy in = 349237 BTU/s

GT Exhaust Sensible	GT Exhaust Latent	Duct Burner Fuel HHV	Makeup+Proc Return	Pump Work	External Steam
273152	42892	0	65	758	32370

Energy out = 349102 BTU/s

Heat Radiated	Blow down	Mech/Elec Losses	Stack Sens.	Stack Latent	Condnsr C.W.	Process Steam	GT Injec.	Proc. Water	Electric Output
3842	802	2617	53420	42892	155874	0	0	5053	84602

Zero enthalpy: dry gases & liquid water @ 32 F (273.15 K)
Heat Balance Error = In - Out = 135 BTU/s = .039 %

HRSG GAS-SIDE PROFILE

	Tg F	Tw F HP/IP	DT F HP/IP	Qg/UA F	DELTA P inch H2O	UA BTU/s-F	Qg BTU/s	Vg ft/s	Tube Rows	Lngth ft
1	1096.8	1006.0	90.8							
1	1096.8	1006.0	90.8							
				147.8	0.9	145.3	21478.0	56.0	3.8	1.6
	1017.9	964.4	53.5							
	1017.9	708.8	309.1							
2	1017.9	964.4	53.5							
				137.7	1.5	259.9	35776.9	52.1	6.8	2.8
	884.7	602.0	282.7							
3	884.7	602.0	282.7							
				106.2	2.4	634.1	67366.9	44.9	13.1	5.5
	627.0	602.0	25.0							
4	627.0	582.0	45.0							
4	627.0	602.0	25.0							
				61.5	1.6	428.3	26319.2	38.2	10.1	4.2
	523.7	434.2	89.6							
	523.7	434.2	89.6							
5	523.7	434.2	89.6							
				53.7	0.8	284.3	15268.1	35.2	6.1	2.5
	463.2	434.2	29.0							
6	463.2	434.2	29.0							
6	463.2	414.2	49.0							
				65.6	1.3	465.0	30479.6	31.8	10.9	4.5
	340.9	221.3	119.6							
	340.9	220.3	120.6							
7	340.9	220.0	120.9							
				95.4	0.3	121.9	11626.6	28.7	2.7	1.1
	293.8	220.0	73.8							
8	293.8	150.0	143.8							
				153.8	0.2	67.1	10322.4	27.1	1.6	0.7
	251.8	87.5	164.2							

Duct burner fuel= 0 kpph
Gas mole composition: 74.5 %N2+Ar 12.2 %O2 6.56 %CO2 6.73 %H2O .002 %SO2
Flue gas dew point = 101 F M.W.= 28.9

HRSG TOTALS	Economisers	Evaporators	Superheaters	TOTAL
Q BTU/s	61467	93328	61678	216473
UA BTU/s-F	861	1040	505	2406
A sq.ft	397797	437895	264838	1100530

Prime surface= 64018 fin surface= 1036511 sq.ft. Averaged fin eff.= .73
HRSG frontal area = 1320 sq.ft. Gas mass flux= 5.26 kpph/sq.ft
HRSG length = 23 ft, 55.2 tube rows, 3167 ft of tubes per row.
2 in dia. tubes with serrated fins, staggered arrangement.
Fin thickness/dia.= .03 , height/dia.= .4 , spacing/dia.= .07
Tube transverse pitch/dia.= 2.5 , row longitudinal pitch/dia.= 2.5

GE 7191 F

Water cooling

air to coal ratio	2.41	air pressure	204	Cp air	0.248
water coal ratio	0.152	air temperature	721	Cp water	1.000
air to water ratio	15.91	water temperature	80	Cp steam	0.455

	lb	wt %	mols	mol %	partial pressure		
air	15.91	94.09%	0.55	90.88%	185.39		
water	1.00	5.91%	0.06	9.12%	18.61	sat temp	224

Temperature of combined stream entering boost compressor

400.52 F sat pressure 247 psia Rel. Hum. 7.53%

Temperature of stream exiting compressor (85% comp eff)

Tf = Ti + (Ti/n*{(Pf/Pi)^((k-1)/k)-1})

where
Ti - inlet temperature - 400.52 F - 860.52 R
n - efficiency - 85.00%
k - ratio of specific heat @ constant pressure to specific
to specific heat @ constant volume 1.384
Pf - final pressure 350 psia
Pi - initial pressure 204 psia

Tf = 564.09 F

	A	B	C	D	E	F	G	H	I	J	K	L	M	N	O
1	Standardized IGCC Gasifier Utility Application													Reference Coal -	
2	Mass & Energy Balance					GE 7191 F			Plant	Full Load				Predicted Gasifier Ou	
3	Stream No.			1		2		3			4			5	
4	Identification			AR Coal		Coal Fines		Sized Coal		CompAir@	2.41 A/C			Water @	0.26
5	From			Illinois #6		Sizer @	30%	Combined Streams		Aux Compr &/or Booster Compr				Cooling Water	H2O/
6	To			Sizer		Briquetting		Gasifier		Gasifier				Gasifier	Coal
7	Gas	Mol Wt		lb/hr	wt %	lb/hr	wt %	lb/hr	wt %	lb/hr	lb/mol	wt %	mol%	lb/hr	
8															
9	CO	28.010								0	0.00	0.00	0.00		
10	H2	2.016								0	0.00	0.00	0.00		
11	CO2	44.010								185	0.01	0.05	0.03		
12	H2O	18.015								2,490	0.18	0.64	1.02	42,251	
13	CH4	16.042								0	0.00	0.00	0.00		
14	C2H6	30.068								0	0.00	0.00	0.00		
15	H2S	34.076								0	0.00	0.00	0.00		
16	COS	60.070								0	0.00	0.00	0.00		
17	N2	28.013								293,822	21.65	75.03	77.28		
18	Ar	39.948								5,144	0.38	1.31	0.95		
19	HCl	36.461								0	0.00	0.00	0.00		
20	HCN	27.026								0	0.00	0.00	0.00		
21	NH3	17.030								0	0.00	0.00	0.00		
22	CS2	76.131								0	0.00	0.00	0.00		
23	SO2	64.059								0	0.00	0.00	0.00		
24	NO	30.006								0	0.00	0.00	0.00		
25	O2	31.999								89,988	6.63	22.98	20.72		
26	NaCl	58.497								0	0.00	0.00	0.00		
27	KCl	74.596								0	0.00	0.00	0.00		
28	Total Gas (lb/hr)									391,630	28.86	100.00	100.00	42,251	
29															
30	Volumetric Flow Rates (STP 14.7 psia, 59F)														
31	(acfm)									7,101					
32	(scfm)									85,691					
33															
34	Heat (BTU/lb)													1315	
35	Cp (BTU/lb F)									0.250					
36	HHV (BTU/lb)			10,776		10,776		10,776		0					
37	LHV (BTU/lb)			10,239		10,239		10,260		0					
38	Sensible Heat above														
39	59 F Btu/lb steam			0		0		0		126					
40	Latent Heat of														
41	Water Btu/lb steam									7					
42															
43	Chemical Heat			1663.87		499.16		1734.09		0.00					
44	(LHV) MBtu/hr														
45	Sensible Heat			0.00		0.00		0.00		49.36					
46	above 59 F MBtu/hr														
47	Latent Heat			87.26		26.18		87.26		2.59					
48	of Water MBtu/hr														
49	TotalHeat(MBtu/hr)			1751.12		525.34		1821.34		51.95				55.56	
50				Number of Gasifiers for 85% Plant Availability @90% Gasifier Availability,										350	psia
51															
52	C	12.011		97,680	60.11%	29,304	60.11%	102,724	60.78%		51				
53	H	1.008		6,776	4.17%	2,033	4.17%	6,776	4.01%		277			4,695	
54	O	16.000		12,301	7.57%	3,690	7.57%	12,301	7.28%		92,336			37,556	
55	N	14.007		1,918	1.18%	575	1.18%	1,918	1.13%		293,822			42,251	Total
56	S	32.060		4,680	2.88%	1,404	2.88%	4,680	2.77%		386,486	Total			
57	CL2	35.500		0	0.00%	0	0.00%	0	0.00%						
58	H2O	18.016		22,913	14.10%	6,874	14.10%	22,913	13.56%						
59	ZnFe2O4														
60	ZnS														
61	FeS														
62	Fe2O3														
63	ZnO														
64	ASH			16,250	10.00%	4,875	10.00%	17,706	10.48%						
65	Total Solids			162,502	100.01%	48,751	100.01%	169,018	100.00%						
66	Total Flow (pph)			162,502 *		48,751		169,018		391,630				42,251	
67															
68	Total Flow (pps)			45.14		13.54		46.95		108.79				11.74	
69	Pressure (psia)			14.7		14.7		14.7		350 *				350 *	
70	Temperature (F)			59		59		59		564 *				564 *	

O	P	Q	R	S	T	U	V	W	X	Y	Z	AA	AB	AC	AD
-	Illinois #6								J-1538		DE-AC21-89MC26291				1
er Output			10/16/90				Revision 7								2
	6	Uncomb	7		8		9				10	55 scf/lb of coal			3
0.26	Ash	Carbon	Fines (Char)		Tar		Dust(per RTI dia)		Miscellaneous		Hot Gas with Tars				4
H2O/	Gasifier	2.69%	Gasifier @	4.00%	Gasifier @	6.00%	Final Cyclone		Gasifier Heat		Gasifier	N2 in coal			5
Coal	Ash Silo		Briquetting		HGCU		Reclaim		Losses		HGCU	to NH3 Conv		90.1%	6
	lb/hr	wt %	lb/hr	wt %	lb/hr	wt %	lb/hr	wt %			lb/hr	lb/mol	wt %	mol %	7
															8
											151,655	6.39	26.26	22.82	9
											6,823	0.29	1.18	14.26	10
											67,867	2.86	11.75	6.50	11
51											29,486	1.24	5.11	6.90	12
											12,391	0.52	2.15	3.26	13
											2,457	0.10	0.43	0.34	14
											4,263	0.18	0.74	0.53	15
											1,254	0.05	0.22	0.09	16
											294,011	12.39	50.91	44.24	17
											5,144	0.22	0.89	0.54	18
											0	0.00	0.00	0.00	19
											200	0.01	0.03	0.03	20
											1,972	0.08	0.34	0.49	21
											0	0.00	0.00	0.00	22
											0	0.00	0.00	0.00	23
											0	0.00	0.00	0.00	24
											0	0.00	0.00	0.00	25
											0	0.00	0.00	0.00	26
											0	0.00	0.00	0.00	27
251											577,521	24.34	100.00	100.00	28
															29
											577,521				30
											23,977				31
											149,856				32
															33
1315															34
	0.260		0.260		0.26		0.260				0.329				35
	0		10,936		17,329		0				2,588.8				36
	0		10,936		16,571		0				2,375.0				37
															38
	154		276		276		323				349				39
															40
	0		0		749		0				214				41
															42
	38.10		71.09		161.57		0.00				1371.59				43
															44
	2.90		1.79		2.69		0.26		98.3 Water/steam jacket		201.37				45
															46
	0.00		0.00		7.30		0.00		22.9 Traversing Stirrer		123.52	Gas HHV=	189	Btu/scf	47
												Estimated=	628	Btu/lb	48
55.56	41.00		72.88		171.56		0.26		121.1 Total		1696.49	Calculated=	639	Btu/lb	49
psia & 17 tph (typical) Coal each:				6.7		Unit Output (MWn)			223.0 MWn			Bulk Gas=	4.67%	H2O	50
												Calc Comb Temp (F)		2335	51
	2,628	13.92	5,044	77.60%	8,580	88.00%					95,103	95,102	0.00%		52
4,695			0	0.00%	780	8.00%					14,293	14,294	0.00%		53
37,556			0	0.00%	195	2.00%					162,561	162,561	0.00%		54
42,251 Total			0	0.00%	98	1.00%					295,740	295,739	0.00%		55
	0	0.00	0	0.00%	98	1.00%					4,680	4,681	-0.02%		56
			0	0.00%						Sub-Totals	572,377	572,377	0.00%		57
			0	0.00%							Sum of	Sum of Gas	Mass		58
							737	90			Streams	Constituents	Unbalance		59
							16	2			balance check				60
							49	6			Cycle Efficiency(g) = 46.71%				61
							0	0			Cycle Efficiency (n) = 43.47%				62
							16	2							63
	16,250	86.08	1,456	22.40%			0	0							64
	18,878	100	6,500	100.00%	9,750	100.00%	819	100							65
42,251	18,878		6,500		9,750		819				577,521				66
															67
11.74	5.24		1.81		2.71		0.23				160.42				68
350 *	14.7		350 *		350 *		280				280				69
564 *	650		1120		1120		1300				1120				70

	AE	AF	AG	AH	AI	AJ	AK	AL	AM	AN	AO	AP	AQ	AR
1	**Standardized IGCC Gasifier Utility Application**													**Reference Coal - Il**
2	**Mass & Energy Balance**			**GE 7191 F**				**Plant**						**Predicted Gasifier Out**
3	Stream No.		11				12				13	14		
4	Identification		Air				Bleed Air				Bleed Air	Compressor Discharge		
5	From		Atmosphere				Compressor				for	Compressor		
6	To		Gas Turbine Compressor				Booster Compressor Cooler				Coolant	Combustor		
7	Gas	Mol Wt	lb/hr	lb/mol	wt %	mol %	lb/hr	lb/mol	wt %	mol %	lb/hr	lb/hr	lb/mol	wt %
8														
9	CO	28.010	0	0.00	0.00	0.00	0	0.00	0.00	0.00	0	0	0.00	0.00
10	H2	2.016	0	0.00	0.00	0.00	0	0.00	0.00	0.00	0	0	0.00	0.00
11	CO2	44.010	1,570	0.01	0.05	0.03	185	0.01	0.05	0.03	190	1,195	0.01	0.05
12	H2O	18.015	21,077	0.18	0.64	1.02	2,490	0.18	0.64	1.02	2,546	16,041	0.18	0.64
13	CH4	16.042	0	0.00	0.00	0.00	0	0.00	0.00	0.00	0	0	0.00	0.00
14	C2H6	30.068	0	0.00	0.00	0.00	0	0.00	0.00	0.00	0	0	0.00	0.00
15	H2S	34.076	0	0.00	0.00	0.00	0	0.00	0.00	0.00	0	0	0.00	0.00
16	COS	60.070	0	0.00	0.00	0.00	0	0.00	0.00	0.00	0	0	0.00	0.00
17	N2	28.013	2,487,140	21.65	75.03	77.28	293,822	21.65	75.03	77.28	300,477	1,892,840	21.65	75.03
18	Ar	39.948	43,543	0.38	1.31	0.95	5,144	0.38	1.31	0.95	5,260	33,138	0.38	1.31
19	HCl	36.461	0	0.00	0.00	0.00	0	0.00	0.00	0.00	0	0	0.00	0.00
20	HCN	27.026	0	0.00	0.00	0.00	0	0.00	0.00	0.00	0	0	0.00	0.00
21	NH3	17.030	0	0.00	0.00	0.00	0	0.00	0.00	0.00	0	0	0.00	0.00
22	CS2	76.131	0	0.00	0.00	0.00	0	0.00	0.00	0.00	0	0	0.00	0.00
23	SO2	64.059	0	0.00	0.00	0.00	0	0.00	0.00	0.00	0	0	0.00	0.00
24	NO	30.006	0	0.00	0.00	0.00	0	0.00	0.00	0.00	0	0	0.00	0.00
25	O2	31.999	761,731	6.63	22.98	20.72	89,988	6.63	22.98	20.72	92,026	579,716	6.63	22.98
26	NaCl	58.497	0	0.00	0.00	0.00	0	0.00	0.00	0.00	0	0	0.00	0.00
27	KCl	74.596	0	0.00	0.00	0.00	0	0.00	0.00	0.00	0	0	0.00	0.00
28	Total Gas (lb/hr)		3,315,060	28.86	100.00	100.00	391,630	28.86	100.00	100.00	400,500	2,522,930	28.86	100.00
29														
30	Volumetric Flow Rates (STP 14.7 psia, 59F)													
31	(acfm)		725,352				14,003					90,208		
32	(scfm)		725,352				85,691				88,259	552,030		
33														
34	hgAdiabHeat(BTU/lb)													
35	Cp (BTU/lb F)		0.240				0.255					0.255		
36	HHV (BTU/lb)		0.0				0.0					0.0		
37	LHV (BTU/lb)		0.0				0.0					0.0		
38	Sensible Heat													
39	above 59 F Btu/lb		0				169					169		
40	Latent Heat													
41	of Water Btu/lb		7				7					7		
42														
43	Chemical Heat		0.00				0.00					0.00		
44	(LHV) MBtu/hr													
45	Sensible Heat		0.00				66.09					425.73		
46	above 59 F MBtu/hr													
47	Latent Heat		21.92				2.59					16.68		
48	of Water MBtu/hr													
49	TotalHeat(MBtu/hr)		21.92				68.68					442.42		
50												Parasitic Load		16.64 MV
51														
52	C	12.011		428				51			52		326	326
53	H	1.008		2,342				277			283		1,782	1,782
54	O	16.000		781,608				92,336			94,428		594,843	594,843
55	N	14.007		2,487,140				293,822			300,477		1,892,840	1,892,840
56	S	32.060		0				0			0		0	0
57	CL2	35.500		3,271,517	sub-totals			386,486	sub-totals		395,240	sub-totals	2,489,792	2,489,792
58	H2O	18.016												balance check
59	ZnFe2O4													
60	ZnS													
61	FeS													
62	Fe2O3													
63	ZnO													
64	ASH													
65	Total Solids													
66	Total Flow (pph)		3,315,060				391,630				400,500	2,522,930		
67														
68	Total Flow (pps)		920.85 *				108.79			*	111.25	700.81		
69	Pressure (psia)		14.7 *				205 *					205		
70	Temperature (F)		59 *				721 *					721		

Illinois #6 — J-1538 — DE-AC21-89MC26291

Output — Revision 7 — 10/16/90

	AS	AT	AU	AV	AW	AX	AY	AZ	BA	BB	BC	BD	BE	BF	BG
	charge	15 Fuel HGCU GT Combustor			%H2S Removed 99.0%	16 Inlet Gas GT Combustor GT Expander			Thrml NO (ppmvd) *Rich/Lean Red. F	25 85%	17 Exhaust Gas Gas Turbine				
	lb/hr	mol/hr	wt %	mol %	lb/hr	lb/mol	mols	wt %	mol %	lb/hr	mols/hr	wt %	mol %		
1	0.00	151,655	5,414	26.38	22.84	0	0.00	0.00	0.00	0.00	0	0.00	0.00	0.00	9
2	0.00	6,738	3,342	1.17	14.10	0	0.00	0.00	0.00	0.00	0	0.00	0.00	0.00	10
3	0.05	67,867	1,542	11.80	6.51	348,992	3.27	0.0026	11.27	7.42	349,182	7934.15	9.98	6.57	11
4	0.64	32,461	1,802	5.65	7.60	144,668	1.35	0.00	4.67	7.52	147,214	8171.77	4.21	6.77	12
5	0.00	12,391	772	2.16	3.26	0	0.00	0.00	0.00	0.00	0	0.00	0.00	0.00	13
6	0.00	2,457	82	0.43	0.34	0	0.00	0.00	0.00	0.00	0	0.00	0.00	0.00	14
7	0.00	43	1	0.01	0.01	0	0.00	0.00	0.00	0.00	0	0.00	0.00	0.00	15
8	0.00	13	0	0.00	0.00	0	0.00	0.00	0.00	0.00	0	0.00	0.00	0.00	16
9	95.05	294,011	10,496	51.14	44.28	2,188,220	20.48	0.0252	70.64	73.12	2,488,697	88840.79	71.14	73.59	17
10	1.31	5,144	129	0.89	0.54	38,282	0.36	0.00	1.24	0.90	43,542	1089.97	1.24	0.90	18
11	0.00	0	0	0.00	0.00	0	0.00	0.00	0.00	0.00	0	0.00	0.00	0.00	19
12	0.00	200	7	0.03	0.03	0	0.00	0.00	0.00	0.00	0	0.00	0.00	0.00	20
13	0.00	1,972	116	0.34	0.49	0	0.00	0.00	0.00	0.00	0	0.00	0.00	0.00	21
14	0.00	0	0	0.00	0.00	0	0.00	0.00	0.00	0.00	0	0.00	0.00	0.00	22
15	0.00	0	0	0.00	0.00	94	0.0009	0.0000	0.0030	0.0014	94	1.46	0.00	0.00	23
16	0.00	0	0	0.00	0.00	769	0.0072	0.0000	0.0248	0.0240	769	25.63	0.02	0.02	24
17	0.00	0	0	0.00	0.00	376,859	3.53	0.0038	12.17	11.02	468,886	14653.14	13.40	12.14	25
18	2.98	0	0	0.00	0.00	0	0.00	0.00	0.00	0.00	0	0.00	0.00	0.00	26
19	0.00	0	0	0.00	0.00	0	0.00	0.00	0.00	0.00	0	0.00	0.00	0.00	27
20	0.00	0	0	0.00	0.00	0	0.00	0.00	0.00	0.00	0	0.00	0.00	0.00	28
21	00.00	574,950	23,704	100.00	100.00	3,097,880	29.00	0.0345	100.00	100.00	3,498,380	120716.92	100.00	100.00	29
22						3,097,884 bal ck					3,498,384	bal ck			30
23															31
24		24,854				268,214					2,227,229				32
25		149,658				674,536					762,169				33
26															34
27															35
28		0.334				0.284					0.267				36
29		2,548.9				0.0					0.0				37
30		2,330.0				0.0					0				38
31															39
32		375				636					279				40
33															41
34		219				49					44				42
35															43
36		1339.65				0.00					0.00				44
37															45
38		215.32				1971.63					974.94				46
39															47
40		125.82				150.45					153.10				48
41															49
42		1680.79				2122.08	2123.21 bal chk				1128.04				50
43	16.64 MWg		Combustion Turbine Output			150.427 MWg					1.06 Turbine Compressor Surge Margin				51
44															52
45	326	0.00%		94,854		95,180	95,180	0.00%			95,231	95,231	0.00%		53
46	1,782	0.00%		14,292		16,074	16,074	0.00%			16,357	16,357	0.00%		54
47	4,843	0.00%		164,875		759,718	759,723	0.00%			854,151	854,151	0.00%		55
48	2,840	0.00%		295,739		2,188,579	2,188,579	0.00%			2,489,056	2,489,056	0.00%		56
49	0	0.00%		47		47	47	0.10%			47	47	0.00%		57
50	9,792	0.00%		569,806	sub-total	3,059,598	3,059,603	0.00%	sub-total		3,454,842	3,454,842	0.00%	sub-total	58
51	es check							balance check					balance check		59
52															60
53															61
54															62
55															63
56															64
57															65
58															66
59		574,950				3,097,880					3,498,380				67
60															68
61		159.71				860.52					971.77				69
62		279.7				197 *					15.13				70
63		1180				2,300 *					1101 *				

	BH	BI	BJ	BK	BL	BM	BN	BO	BP	BQ	BR	BS
1	**Standardized IGCC Gasifier Utility Application**						**Reference Coal -**				**Illinois #6**	
2	**Mass & Energy Balance**			**GE 7191 F**			**Predicted Gasifier Output**					
3	Stream No.			18			19	Thrml NO (ppmvd)		25	20	21
4	Identification			Fuel for Supplementary Firing			Flue Gas		SCR Red F	80 %	Superheated Steam	Low Pressure St
5	From			Gasifier			HRSG		R/L Red F	85 %	HRSG	HRSG
6	To			HRSG			Stack		NOx Reburn F	0 %	Steam Turbine	Steam Turbin
7	Gas	Mol Wt	lb/hr	lb/mol	wt %	mol %	lb/hr	mols/hr	wt %	mol %	lb/hr	lb/hr
8												
9	CO	28.010	0	6.39	26.26	22.82	0	0.00	0.00	0.00		
10	H2	2.016	0	0.29	1.18	14.26	0	0.00	0.00	0.00		
11	CO2	44.010	0	2.86	11.75	6.50	349,182	7934.15	9.98	6.57		
12	H2O	18.015	0	1.24	5.11	6.90	147,214	8171.77	4.21	6.77		
13	CH4	16.042	0	0.52	2.15	3.26	0	0.00	0.00	0.00		
14	C2H6	30.068	0	0.10	0.43	0.34	0	0.00	0.00	0.00		
15	H2S	34.076	0	0.18	0.74	0.53	0	0.00	0.00	0.00		
16	COS	60.070	0	0.05	0.22	0.09	0	0.00	0.00	0.00		
17	N2	28.013	0	12.39	50.91	44.24	2,488,697	88840.79	71.15	73.61		
18	Ar	39.948	0	0.22	0.89	0.54	43,542	1089.97	1.24	0.90		
19	HCl	36.461	0	0.00	0.00	0.00	0	0.00	0.00	0.00		
20	HCN	27.026	0	0.01	0.03	0.03	0	0.00	0.00	0.00		
21	NH3	17.030	0	0.08	0.34	0.49	0	0.00	0.00	0.00		
22	CS2	76.131	0	0.00	0.00	0.00	0	0.00	0.00	0.00	Stack Emissions (lb/MBtu)	
23	SO2	64.059	0	0.00	0.00	0.00	94	1.46	0.00	0.00	0.053	
24	NO	30.006	0	0.00	0.00	0.00	154	5.13	0.00	0.00	0.09	
25	O2	31.999	0	0.00	0.00	0.00	468,886	14653.14	13.41	12.14		
26	NaCl	58.497	0	0.00	0.00	0.00	0	0.00	0.00	0.00		
27	KCl	74.596	0	0.00	0.00	0.00	0	0.00	0.00	0.00		
28	Total Gas (lb/hr)		0	24.34	100.00	100.00	3,497,765	120696.42	100.00	100.00		
29							3,497,769	bal chk				
30	Volumetric Flow Rates (STP 14.7 psia, 59F)											
31	(acfm)		0				1,045,418					
32	(scfm)		0				762,039					
33												
34	Heat (BTU/lb)										1490.1	
35	Cp (BTU/lb F)		0.334				0.249					
36	HHV (BTU/lb)		2548.9				0.0					
37	LHV (BTU/lb)		2330.0				0					
38	Sensible Heat above											
39	59 F Btu/lb steam		0				48					
40	Latent Heat of											
41	Water Btu/lb steam		0				44					
42												
43	Chemical Heat		0.00				0.00					
44	(LHV) MBtu/hr											
45	Sensible Heat		0.00				167.81					
46	above 59 F MBtu/hr											
47	Latent Heat		0.00				153.10					
48	of Water MBtu/hr											
49	TotalHeat(MBtu/hr)		0.00				320.91				627.95	
50												HRSG Turbine C
51												
52	C	12.011		0			95,231	95,231	0.00%			
53	H	1.008		0			16,357	16,357	0.00%			
54	O	16.000		0			853,823	853,823	0.00%			
55	N	14.007		0			2,488,769	2,488,769	0.00%			
56	S	32.060		0			47	47	0.00%			
57	CL2	35.500		0	sub-total		3,454,227	3,454,227	0.00%	sub-total		
58	H2O	18.016										
59	ZnFe2O4											
60	ZnS											
61	FeS											
62	Fe2O3											
63	ZnO											
64	ASH											
65	Total Solids											
66	Total Flow (pph)		0				3,498,380				421,416	
67												
68	Total Flow (pps)		0 *				971.77				117.06	
69	Pressure (psia)		279.7				14.7				1465	
70	Temperature (F)		1180				252 *				1000	

BS	BT	BU	BV	BW
	J-1538	DE-AC21-89MC26291		1
	Revision 7		10/16/90	2
21	22	23	24	3
ssure Steam	Make Up Water	Sat. Steam	Process Stm	4
HRSG	WaterTreatment	Gasifier	Stm Turbine	5
m Turbine	HRSG	HRSG	Process Facility	6
lb/hr	lb/hr	lb/hr	lb/hr	7
				8
				9
				10
				11
				12
				13
				14
				15
				16
				17
				18
				19
				20
				21
				22
				23
				24
				25
				26
				27
				28
				29
				30
				31
				32
				33
1204	48	1204		34
				35
				36
				37
				38
				39
				40
				41
				42
				43
				44
				45
				46
				47
				48
80.55	2.26	98.25		49
Turbine Output	89.3	MWg		50
				51
				52
				53
				54
				55
				56
				57
				58
				59
				60
				61
				62
				63
				64
				65
66,902	47,132	96,703	0	66
				67
18.58	13.09	26.86	0.00	68
350	15	350	250	69
432	80	432	420	70

	BX	BY	BZ	CA	CB	CC	CD	CE	CF	CG	CH	CI
1	Standardized IGCC Gasifier Utility Application								Reference Coal -			Illinois #6
2	Mass & Energy Balance				GE 7191 F				Predicted Gasifier Output			
3	Stream No.		25		26					27		27a
4	Identification		Regen Recycle Loop		Conc SO2 Bleed					Elemental Sulfur		Elemental Sulfur
5	From		Recycle Blower		Regen Loop					Resox Process		DSRP
6	To		Regenerator		SRP					Marketable Byproduct		Marketable Byproduc
7	Gas	Mol Wt	lb/hr	wt %	lb/hr	lbs/mol	mols/hr	wt %	mol %	lb/hr	wt %	lb/hr
8												
9	CO	28.010			0	0.00	0.00	0.00	0.00			
10	H2	2.016			0	0.00	0.00	0.00	0.00			
11	CO2	44.010	236	0.05	20	0.02	0.45	0.05	0.04			
12	H2O	18.015	2,943	0.62	245	0.20	13.61	0.62	1.11			
13	CH4	16.042			0	0.00	0.00	0.00	0.00			
14	C2H6	30.068			0	0.00	0.00	0.00	0.00			
15	H2S	34.076			0	0.00	0.00	0.00	0.00			
16	COS	60.070			0	0.00	0.00	0.00	0.00			
17	N2	28.013	356,030	74.87	29,669	24.10	1059.12	74.87	86.02			
18	Ar	39.948	0	0.00	0	0.00	0.00	0.00	0.00			
19	HCl	36.461			0	0.00	0.00	0.00	0.00			
20	HCN	27.026			0	0.00	0.00	0.00	0.00			
21	NH3	17.030			0	0.00	0.00	0.00	0.00			
22	CS2	76.131			0	0.00	0.00	0.00	0.00			
23	SO2	64.059	111,154	23.37	9,263	7.52	144.60	23.37	11.74			
24	NO	30.006			0	0.00	0.00	0.00	0.00			
25	O2	31.999	5,164	1.09	430	0.35	13.45	1.09	1.09			
26	NaCl	58.497			0	0.00	0.00	0.00	0.00			
27	KCl	74.596			0	0.00	0.00	0.00	0.00			
28	Total Gas (lb/hr)		475,527	100.00	39,627	32.19	1231	100.00	100.00			
29												
30	Volumetric Flow Rates		(STP 14.7 psia, 59F)									
31	(acfm)		16,715		1,318							
32	(scfm)		93,283		7,774							
33												
34	Heat (BTU/lb)											
35	Cp (BTU/lb F)		0.240		0.240					0.000		0.0
36	HHV (BTU/lb)											
37	LHV (BTU/lb)											
38	Sensible Heat above											
39	59 F Btu/lb steam											
40	Latent Heat of											
41	Water Btu/lb steam											
42												
43	Chemical Heat									18.43		18
44	(LHV) MBtu/hr											
45	Sensible Heat		153.04		11.80					0.00		0
46	above 59 F MBtu/hr											
47	Latent Heat		3.06		0.26					0.00		0
48	of Water MBtu/hr											
49	TotalHeat(MBtu/hr)		156.10		12.06					18.43		18
50												
51												
52	C	12.011										
53	H	1.008										
54	O	16.000										
55	N	14.007										
56	S	32.060								4,631		4,
57	CL2	35.500										
58	H2O	18.016										
59	ZnFe2O4											
60	ZnS											
61	FeS											
62	Fe2O3											
63	ZnO											
64	ASH				0.00			0				
65	Total Solids											
66	Total Flow (pph)		475,527		39,627					4,631		4
67												
68	Total Flow (pps)		132.09		11.01					1.29		
69	Pressure (psia)		294		294					15		
70	Temperature (F)		1400		1300					284		

	CJ	CK	CL	CM
	J-1538	DE-AC21-89MC26291		1
	Revision 7		10/16/90	2
	27b	28		3
lfur	Sulfur Dioxide	Ash		4
	SO2 Recovery Unit	SO2 Reductor		5
roduct	Marketable Byproduct	Disposal		6
	lb/hr	lb/hr	wt%	7
				8
				9
				10
				11
				12
				13
				14
				15
				16
				17
				18
				19
				20
				21
				22
				23
				24
				25
				26
				27
				28
				29
				30
				31
				32
				33
				34
0.000	0.000			35
				36
				37
				38
		154	0	39
				40
				41
				42
18.43	18.43	6.66	0	43
				44
0.00	0.00	0.00	0	45
				46
0.00	0.00	0.00	0	47
				48
18.43	18.43	6.66	0.4	49
				50
				51
		459	3	52
				53
				54
				55
4,631	4,631			56
				57
				58
				59
				60
				61
				62
				63
		16,250	97	64
		16,709	100	65
4,631	9,263	16,709	100	66
				67
1.29	2.57	4.64		68
15	100	15		69
150	59	284		70

Retrofit/Repower
Schematic & Mass/Energy Balance

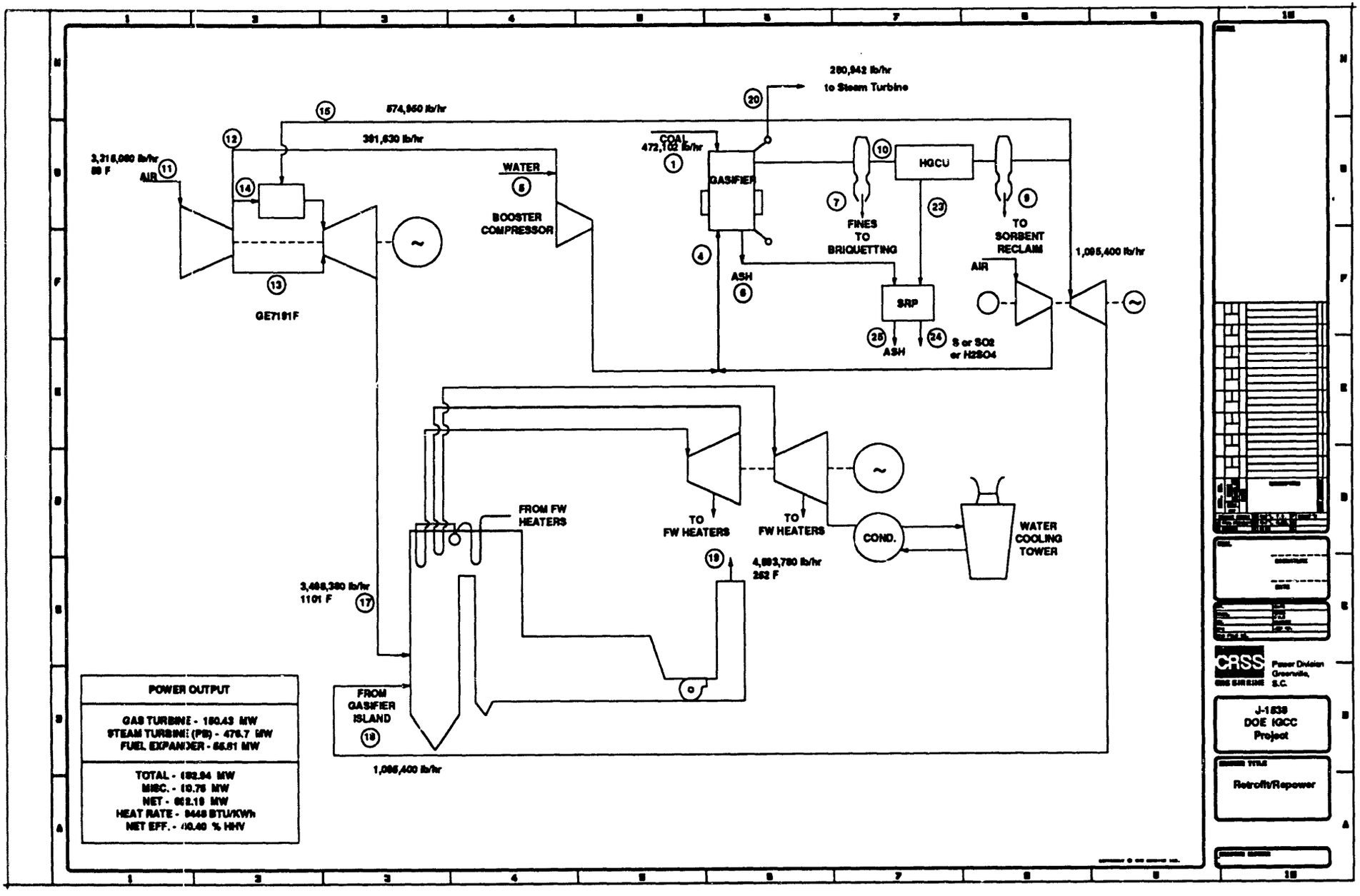
280,942 lb/hr
to Steam Turbine
20
15
574,950 lb/hr
391,630 lb/hr
12
3,216,000 lb/hr
59 F
AIR
11
14
13
GE7191F
WATER
5
BOOSTER
COMPRESSOR
COAL
472,102 lb/hr
1
GASIFIER
4
ASH
6
10
HGCU
7
FINES
TO
BRIQUETTING
23
9
TO
SORBENT
RECLAIM
AIR
1,095,400 lb/hr
SRP
25
ASH
24
S or SO2
or H2SO4
FROM FW
HEATERS
TO
FW HEATERS
TO
FW HEATERS
COND.
WATER
COOLING
TOWER
19
4,693,780 lb/hr
252 F
3,488,380 lb/hr
1101 F
17
FROM
GASIFIER
ISLAND
18
1,095,400 lb/hr
POWER OUTPUT
GAS TURBINE - 150.43 MW
STEAM TURBINE (PB) - 476.7 MW
FUEL EXPANDER - 56.51 MW
TOTAL - 683.94 MW
MISC. - 10.76 MW
NET - 662.18 MW
HEAT RATE - 9448 BTU/KWh
NET EFF. - 40.40 % HHV
CRSS
Power Division
Greenville, S.C.
J-1638
DOE IGCC
Project
Retrofit/Repower

	A	B	C	D	E	F	G	H	I	J	K	L	M	N	O
1	Standardized IGCC Gasifier Retrofit/Repower Application													Reference Coal -	
2	Mass & Energy Balance					GE 7191 F			Plant		Full Load			Predicted Gasifier Out	
3	Stream No.			1		2		3		4				5	
4	Identification			AR Coal		Coal Fines		Sized Coal		CompAir@	2.41 A/C			Water @	0.26
5	From			Illinois #6		Sizer @	30%	Combined Streams		Aux Compr	&/or Booster Compr			Cooling Water	H2O/
6	To			Sizer		Briquetting		Gasifier			Gasifier			Gasifier	Coal
7	Gas	Mol Wt		lb/hr	wt %	lb/hr	wt %	lb/hr	wt %	lb/hr	lb/mol	wt %	mol%	lb/hr	
8															
9	CO	28.010								0	0.00	0.00	0.00		
10	H2	2.016								0	0.00	0.00	0.00		
11	CO2	44.010								539	0.01	0.05	0.03		
12	H2O	18.015								7,234	0.18	0.64	1.02	122,747	
13	CH4	16.042								0	0.00	0.00	0.00		
14	C2H6	30.068								0	0.00	0.00	0.00		
15	H2S	34.076								0	0.00	0.00	0.00		
16	COS	60.070								0	0.00	0.00	0.00		
17	N2	28.013								853,614	21.65	75.03	77.28		
18	Ar	39.948								14,944	0.38	1.31	0.95		
19	HCl	36.461								0	0.00	0.00	0.00		
20	HCN	27.026								0	0.00	0.00	0.00		
21	NH3	17.030								0	0.00	0.00	0.00		
22	CS2	76.131								0	0.00	0.00	0.00		
23	SO2	64.059								0	0.00	0.00	0.00		
24	NO	30.006								0	0.00	0.00	0.00		
25	O2	31.999								261,435	6.63	22.98	20.72		
26	NaCl	58.497								0	0.00	0.00	0.00		
27	KCl	74.596								0	0.00	0.00	0.00		
28	Total Gas (lb/hr)									1,137,766	28.86	100.00	100.00	122,747	
29															
30	Volumetric Flow Rates (STP 14.7 psia, 59F)														
31	(acfm)									20,630					
32	(scfm)									248,949					
33															
34	Heat (BTU/lb)													1315	
35	Cp (BTU/lb F)									0.250					
36	HHV (BTU/lb)			10,776		10,776		10,776		0					
37	LHV (BTU/lb)			10,239		10,239		10,240		0					
38	Sensible Heat above														
39	59 F Btu/lb steam			0		0		0		126					
40	Latent Heat of														
41	Water Btu/lb steam									7					
42															
43	Chemical Heat			4833.88		1450.16		5037.88		0.00					
44	(LHV) MBtu/hr														
45	Sensible Heat			0.00		0.00		0.00		145.41					
46	above 59 F MBtu/hr														
47	Latent Heat			253.50		76.05		253.50		7.52					
48	of Water MBtu/hr														
49	TotalHeat(MBtu/hr)			5087.37		1526.21		5291.37		150.93				161.41	
50				Number of Gasifiers for 85% Plant Availability @90% Gasifier Availability,										350	psia
51															
52	C	12.011		283,781	60.11%	85,134	60.11%	298,435	60.78%		147			13,639	
53	H	1.008		19,687	4.17%	5,906	4.17%	19,687	4.01%		804			109,108	
54	O	16.000		35,738	7.57%	10,721	7.57%	35,738	7.28%		268,257			122,747	Total
55	N	14.007		5,571	1.18%	1,671	1.18%	5,571	1.13%		853,614				
56	S	32.060		13,597	2.88%	4,079	2.88%	13,597	2.77%		1,122,821	Total			
57	CL2	35.500		0	0.00%	0	0.00%	0	0.00%						
58	H2O	18.016		66,566	14.10%	19,970	14.10%	66,566	13.56%						
59	ZnFe2O4														
60	ZnS														
61	FeS														
62	Fe2O3														
63	ZnO														
64	ASH			47,210	10.00%	14,163	10.00%	51,440	10.48%						
65	Total Solids			472,102	100.01%	141,631	100.01%	491,033	100.00%						
66	Total Flow (pph)			472,102 •		141,631		491,033		1,137,766				122,747	
67															
68	Total Flow (pps)			131.14		39.34		136.40		316.05				34.10	
69	Pressure (psia)			14.7		14.7		14.7		350 •				350 •	
70	Temperature (F)			59		59		59		564 •				564 •	

Illinois #6 — J-1538 — DE-AC21-89MC26291

utput — 10/17/90 — Revision 3

	P	Q	R	S	T	U	V	W	X	Y	Z	AA	AB	AC	AD
	6 Ash Gasifier Ash Silo	Uncomb Carbon 2.69%	7 Fines (Char) Gasifier Briquetting	4.00%	8 Tar Gasifier HGCU	6.00%	9 Dust(per RTI dia) Final Cyclone Reclaim		Miscellaneous Gasifier Heat Losses		10 Hot Gas with Tars Gasifier HGCU	N2 in coal to NH3 Conv	55 scf/lb of coal	90.1%	1
															2
26															3
00/															4
al															5
											lb/hr	lb/mol	wt %	mol %	6
	lb/hr	wt %	lb/hr	wt %	lb/hr	wt %	lb/hr	wt %							7
															8
											440,589	6.39	26.26	22.82	9
											19,821	0.29	1.18	14.26	10
											197,167	2.86	11.75	6.50	11
											85,662	1.24	5.11	6.90	12
											35,997	0.52	2.15	3.26	13
											7,138	0.10	0.43	0.34	14
											12,385	0.18	0.74	0.53	15
											3,644	0.05	0.22	0.09	16
											854,163	12.39	50.91	44.24	17
											14,943	0.22	0.89	0.54	18
											0	0.00	0.00	0.00	19
											581	0.01	0.03	0.03	20
											5,728	0.08	0.34	0.49	21
											0	0.00	0.00	0.00	22
											0	0.00	0.00	0.00	23
											0	0.00	0.00	0.00	24
											0	0.00	0.00	0.00	25
											0	0.00	0.00	0.00	26
											0	0.00	0.00	0.00	27
											1,677,818	24.34	100.00	100.00	28
															29
											1,677,818				30
											69,657				31
											435,363				32
															33
															34
											0.329				35
	0.260		0.260		0.26		0.260				2,588.8				36
	0		10,936		17,329		0				2,375.0				37
	0		10,936		16,571		0								38
											349				39
	154		276		276		323								40
											214				41
	0		0		749		0								42
											3984.76				43
	110.69		206.52		489.41		0.00								44
											585.03				45
	8.43		5.21		7.81		0.77		285.4 Water/steam jacket						46
									66.5 Traversing Stirrer		358.85	Gas HHV=	189	Btu/scf	47
	0.00		0.00		21.21		0.00					Estimated=	628	Btu/lb	48
									352.0 Total		4928.64	Calculated=	639	Btu/lb	49
					498.43		0.77					Bulk Gas=	4.67%	H2O	50
	119.12		211.73									Calc Comb Temp (F)	2335		51
															52
											276,294	276,292	0.00%		53
	7,634	13.92	14,654	77.60%	24,927	88.00%					41,525	41,527	0.00%		54
			0	0.00%	2,266	8.00%					472,273	472,275	0.00%		55
			0	0.00%	567	2.00%					859,185	859,182	0.00%		56
			0	0.00%	283	1.00%					13,597	13,599	-0.02%		57
	0	0.00	0	0.00%	283	1.00%				Sub-Totals	1,662,873	1,662,875	0.00%		58
			0	0.00%							Sum of Streams	Sum of Gas Constituents	Mass Unbalance		59
			0	0.00%								balance check			60
							2,142	50			Cycle Efficiency(g) = 45.81%				61
							48	2			Cycle Efficiency (n) = 40.40%				62
							143	6							63
							0	0							64
							48	2							65
							0	0							66
	47,210	86.08	4,230	22.40%			2,380	100			1,677,818				67
	54,844	100	18,884	100.00%	28,326	100.00%									68
	54,844		18,884		28,326		2380								69
	15.23		5.25		7.87		0.66				466.06				70
•	14.7		350 •		350 •		280				280				
•	650		1120		1120		1300				1120				

gsia & 17 tph (typical) Coal each: 15.3

Unit Output (MWn) 602.1 MWn

	AE	AF	AG	AH	AI	AJ	AK	AL	AM	AN	AO	AP	AQ	AR
1	Standardized IGCC Gasifier Retrofit/Repower Application											Reference Coal -		Ill
2	Mass & Energy Balance			GE 7191 F			Plant					Predicted Gasifier Out		
3	Stream No.		11				12				13	14		
4	Identification		Air				Bleed Air				Bleed Air	Compressor Discharge		
5	From		Atmosphere				Compressor				for	Compressor		
6	To		Gas Turbine Compressor				Booster Compressor Cooler				Coolant	Combustor		
7	Gas	Mol Wt	lb/hr	lb/mol	wt %	mol %	lb/hr	lb/mol	wt %	mol %	lb/hr	lb/hr	lb/mol	wt %
8														
9	CO	28.010	0	0.00	0.00	0.00	0	0.00	0.00	0.00	0	0	0.00	0.00
10	H2	2.016	0	0.00	0.00	0.00	0	0.00	0.00	0.00	0	0	0.00	0.00
11	CO2	44.010	1,570	0.01	0.05	0.03	185	0.01	0.05	0.03	190	1,195	0.01	0.05
12	H2O	18.015	21,077	0.18	0.64	1.02	2,490	0.18	0.64	1.02	2,546	16,041	0.18	0.64
13	CH4	16.042	0	0.00	0.00	0.00	0	0.00	0.00	0.00	0	0	0.00	0.00
14	C2H6	30.068	0	0.00	0.00	0.00	0	0.00	0.00	0.00	0	0	0.00	0.00
15	H2S	34.076	0	0.00	0.00	0.00	0	0.00	0.00	0.00	0	0	0.00	0.00
16	COS	60.070	0	0.00	0.00	0.00	0	0.00	0.00	0.00	0	0	0.00	0.00
17	N2	28.013	2,487,140	21.65	75.03	77.28	293,822	21.65	75.03	77.28	300,477	1,892,840	21.65	75.03
18	Ar	39.948	43,543	0.38	1.31	0.95	5,144	0.38	1.31	0.95	5,260	33,138	0.38	1.31
19	HCl	36.461	0	0.00	0.00	0.00	0	0.00	0.00	0.00	0	0	0.00	0.00
20	HCN	27.026	0	0.00	0.00	0.00	0	0.00	0.00	0.00	0	0	0.00	0.00
21	NH3	17.030	0	0.00	0.00	0.00	0	0.00	0.00	0.00	0	0	0.00	0.00
22	CS2	76.131	0	0.00	0.00	0.00	0	0.00	0.00	0.00	0	0	0.00	0.00
23	SO2	64.059	0	0.00	0.00	0.00	0	0.00	0.00	0.00	0	0	0.00	0.00
24	NO	30.006	0	0.00	0.00	0.00	0	0.00	0.00	0.00	0	0	0.00	0.00
25	O2	31.999	761,731	6.63	22.98	20.72	89,988	6.63	22.98	20.72	92,026	579,716	6.63	22.98
26	NaCl	58.497	0	0.00	0.00	0.00	0	0.00	0.00	0.00	0	0	0.00	0.00
27	KCl	74.596	0	0.00	0.00	0.00	0	0.00	0.00	0.00	0	0	0.00	0.00
28	Total Gas (lb/hr)		3,315,060	28.86	100.00	100.00	391,630	28.86	100.00	100.00	400,500	2,522,930	28.86	100.00
29														
30	Volumetric Flow Rates (STP 14.7 psia, 59F)													
31	(acfm)		725,352				14,003					90,208		
32	(scfm)		725,352				85,691				88,259	552,030		
33														
34	hgAdiabHeat(BTU/lb)													
35	Cp (BTU/lb F)		0.240				0.255					0.255		
36	HHV (BTU/lb)		0.0				0.0					0.0		
37	LHV (BTU/lb)		0.0				0.0					0.0		
38	Sensible Heat													
39	above 59 F Btu/lb		0				169					169		
40	Latent Heat													
41	of Water Btu/lb		7				7					7		
42														
43	Chemical Heat		0.00				0.00					0.00		
44	(LHV) MBtu/hr													
45	Sensible Heat		0.00				66.09					425.73		
46	above 59 F MBtu/hr													
47	Latent Heat		21.92				2.59					16.68		
48	of Water MBtu/hr													
49	TotalHeat(MBtu/hr)		21.92				68.68					442.42		
50												Parasitic Load		80.75 MW
51														
52	C	12.011		428				51			52		326	326
53	H	1.008		2,342				277			283		1,782	1,782
54	O	16.000		781,608				92,336			94,428		594,843	594,843
55	N	14.007		2,487,140				293,822			300,477		1,892,840	1,892,840
56	S	32.060		0				0			0		0	0
57	CL2	35.500		3,271,517	sub-totals			386,486	sub-totals		395,240	sub-totals	2,489,792	2,489,792
58	H2O	18.016												balance check
59	ZnFe2O4													
60	ZnS													
61	FeS													
62	Fe2O3													
63	ZnO													
64	ASH													
65	Total Solids													
66	Total Flow (pph)		3,315,060				391,630				400,500	2,522,930		
67														
68	Total Flow (ppm)		920.85 •				108.79			•	111.25	700.81		
69	Pressure (psia)		14.7 •				205 •					205		
70	Temperature (F)		59 •				721 •					721		

al - Illinois #6 J-1538 DE-AC21-89MC26291

ifier Output Revision 3 10/17/90

AR	AS	AT	AU	AV	AW	AX	AY	AZ	BA	BB	BC	BD	BE	BF	BG
er Discharge er r		15 Fuel HGCU GT Combustor			%H2S Removed 99.0%	16 Inlet Gas GT Combustor GT Expander			Thrml NO (ppmvd) *Rich/Lean Red. F	25 85%	17 Exhaust Gas Gas Turbine Boiler				
wt %	mol %	lb/hr	mol/hr	wt %	mol %	lb/hr	lb/mol	mols	wt %	mol %	lb/hr	mols/hr	wt %	mol %	
0.00	0.00	151,655	5,414	26.38	22.84	0	0.00	0.00	0.00	0.00	0	0.00	0.00	0.00	9
0.00	0.00	6,738	3,342	1.17	14.10	0	0.00	0.00	0.00	0.00	0	0.00	0.00	0.00	10
0.05	0.03	67,867	1,542	11.80	6.51	348,993	3.27	0.0026	11.27	7.42	349,182	7934.16	9.98	6.57	11
0.64	1.02	32,461	1,802	5.65	7.60	144,668	1.35	0.00	4.67	7.52	147,214	8171.77	4.21	6.77	12
0.00	0.00	12,391	772	2.16	3.26	0	0.00	0.00	0.00	0.00	0	0.00	0.00	0.00	13
0.00	0.00	2,457	82	0.43	0.34	0	0.00	0.00	0.00	0.00	0	0.00	0.00	0.00	14
0.00	0.00	43	1	0.01	0.01	0	0.00	0.00	0.00	0.00	0	0.00	0.00	0.00	15
0.00	0.00	13	0	0.00	0.00	0	0.00	0.00	0.00	0.00	0	0.00	0.00	0.00	16
75.03	77.28	294,011	10,496	51.14	44.28	2,188,220	20.48	0.0252	70.64	73.12	2,488,697	88840.79	71.14	73.59	17
1.31	0.95	5,144	129	0.89	0.54	38,282	0.36	0.00	1.24	0.90	43,542	1089.97	1.24	0.90	18
0.00	0.00	0	0	0.00	0.00	0	0.00	0.00	0.00	0.00	0	0.00	0.00	0.00	19
0.00	0.00	200	7	0.03	0.03	0	0.00	0.00	0.00	0.00	0	0.00	0.00	0.00	20
0.00	0.00	1,972	116	0.34	0.49	0	0.00	0.00	0.00	0.00	0	0.00	0.00	0.00	21
0.00	0.00	0	0	0.00	0.00	0	0.00	0.00	0.00	0.00	0	0.00	0.00	0.00	22
0.00	0.00	0	0	0.00	0.00	94	0.0009	0.0000	0.0030	0.0014	94	1.46	0.00	0.00	23
0.00	0.00	0	0	0.00	0.00	769	0.0072	0.0000	0.0248	0.0240	769	25.63	0.02	0.02	24
22.98	20.72	0	0	0.00	0.00	376,859	3.53	0.0038	12.17	11.02	468,886	14653.14	13.40	12.14	25
0.00	0.00	0	0	0.00	0.00	0	0.00	0.00	0.00	0.00	0	0.00	0.00	0.00	26
0.00	0.00	0	0	0.00	0.00	0	0.00	0.00	0.00	0.00	0	0.00	0.00	0.00	27
100.00	100.00	574,930	23,704	100.00	100.00	3,097,880	29.00	0.0345	100.00	100.00	3,498,380	120716.92	100.00	100.00	28
						3,097,884 bal ck					3,498,384	bal ck			29
															30
		24,854				268,214					2,227,230				31
		149,658				674,536					762,169				32
															33
															34
		0.334				0.284					0.267				35
		2,548.9				0.0					0.0				36
		2,330.0				0.0					0				37
															38
		375				636					279				39
															40
		219				49					44				41
															42
		1339.65				0.00					0.00				43
															44
		215.32				1971.63					974.94				45
															46
		125.82				150.45					153.10				47
															48
		1680.79				2122.08	2123.21 bal chk				1128.04				49
80.75 MWg			Combustion Turbine Output			150.427 MWg					1.06 Turbine Compressor Surge Margin				50
															51
326	0.00%		94,854			95,180	95,180	0.00%			95,232	95,232	0.00%		52
1,782	0.00%		14,292			16,074	16,074	0.00%			16,357	16,357	0.00%		53
594,843	0.00%		164,875			759,718	759,723	0.00%			854,151	854,151	0.00%		54
1,892,840	0.00%		295,739			2,188,579	2,188,579	0.00%			2,489,056	2,489,056	0.00%		55
0	0.00%		47			47	47	0.10%			47	47	0.00%		56
2,489,792	0.00%		569,806	sub-total		3,059,598	3,059,603	0.00%	sub-total		3,454,842	3,454,842	0.00%	sub-total	57
balance check							balance check					balance check			58
															59
															60
															61
															62
															63
															64
															65
															66
		574,930				3,097,880					3,498,380				67
		159.71				860.52					971.77				68
		279.7				197 *					15.13				69
		1180				2,300 *					1101 *				70

	BX	BY	BZ	CA	CB	CC	CD	CE	CF	CG	CH	CI
1	Standardized IGCC Gasifier Retrofit/Repower Application									Reference Coal - Illinois #6		
2	Mass & Energy Balance				GE 7191 F					Predicted Gasifier Output		
3	Stream No.		22		23					24		24a
4	Identification		Regen Recycle Loop		Conc SO2 Bleed					Elemental Sulfur		Elemental Sulfur
5	From		Recycle Blower		Regen Loop					Recox Process		DSRP
6	To		Regenerator		SRP					Marketable Byproduct		Marketable Byproduct
7	Gas	Mol Wt	lb/hr	wt %	lb/hr	lbs/mol	mols/hr	wt %	mol %	lb/hr	wt %	lb/hr
8												
9	CO	28.010			0	0.00	0.00	0.00	0.00			
10	H2	2.016			0	0.00	0.00	0.00	0.00			
11	CO2	44.010	685	0.05	57	0.02	1.30	0.05	0.04			
12	H2O	18.015	8,550	0.62	712	0.20	39.55	0.62	1.11			
13	CH4	16.042			0	0.00	0.00	0.00	0.00			
14	C2H6	30.068			0	0.00	0.00	0.00	0.00			
15	H2S	34.076			0	0.00	0.00	0.00	0.00			
16	COS	60.070			0	0.00	0.00	0.00	0.00			
17	N2	28.013	1,034,341	74.87	86,195	24.10	3076.97	74.87	86.02			
18	Ar	39.948	0	0.00	0	0.00	0.00	0.00	0.00			
19	HCl	36.461			0	0.00	0.00	0.00	0.00			
20	HCN	27.026			0	0.00	0.00	0.00	0.00			
21	NH3	17.030			0	0.00	0.00	0.00	0.00			
22	CS2	76.131			0	0.00	0.00	0.00	0.00			
23	SO2	64.059	322,926	23.37	26,910	7.52	420.09	23.37	11.74			
24	NO	30.006			0	0.00	0.00	0.00	0.00			
25	O2	31.999	15,072	1.09	1,250	0.35	39.07	1.09	1.09			
26	NaCl	58.497			0	0.00	0.00	0.00	0.00			
27	KCl	74.596			0	0.00	0.00	0.00	0.00			
28	Total Gas (lb/hr)		1,381,505	100.00	115,125	32.19	3577	100.00	100.00			
29												
30	Volumetric Flow Rates		(STP 14.7 psia, 59F)									
31	(acfm)		48,562		3,829							
32	(scfm)		271,007		22,584							
33												
34	Heat (BTU/lb)											
35	Cp (BTU/lb F)		0.240		0.240					0.000		0.00
36	HHV (BTU/lb)											
37	LHV (BTU/lb)											
38	Sensible Heat above											
39	59 F Btu/lb steam											
40	Latent Heat of											
41	Water Btu/lb steam											
42												
43	Chemical Heat									53.55		53.5
44	(LHV) MBtu/hr											
45	Sensible Heat		444.62		34.29					0.00		0.0
46	above 59 F MBtu/hr											
47	Latent Heat		8.89		0.74					0.00		0.0
48	of Water MBtu/hr											
49	TotalHeat(MBtu/hr)		453.52		35.03					53.55		53.5
50												
51												
52	C	12.011										
53	H	1.008										
54	O	16.000										
55	N	14.007										
56	S	32.060								13,455		13,45
57	CL2	35.500										
58	H2O	18.016										
59	ZnFe2O4											
60	ZnS											
61	FeS											
62	Fe2O3											
63	ZnO											
64	ASH				0.00			0				
65	Total Solids											
66	Total Flow (pph)		1,381,505		115,125					13,455		13,45
67												
68	Total Flow (pps)		383.75		31.98					3.74		3.7
69	Pressure (psia)		294		294					15		1
70	Temperature (F)		1400		130.0					284		1

	CJ	CK	CL	CM
	J-1538	DE-AC21-89MC26291		1
	Revision 3		10/17/90	2
	24b	25		3
ulfur	Sulfur Dioxide	Ash		4
)	SO2 Recovery Unit	SO2 Reductor		5
yproduct	Marketable Byproduct	Disposal		6
	lb/hr	lb/hr	wt %	7
				8
				9
				10
				11
				12
				13
				14
				15
				16
				17
				18
				19
				20
				21
				22
				23
				24
				25
				26
				27
				28
				29
				30
				31
				32
				33
				34
0.000	0.000			35
				36
				37
				38
		154	0	39
				40
				41
				42
53.55	53.55	19.34	0	43
				44
0.00	0.00	0.00	0	45
				46
0.00	0.00	0.00	0	47
				48
53.55	53.55	19.34	0.4	49
				50
				51
		1,334	3	52
				53
				54
				55
13,455	13,455			56
				57
				58
				59
				60
				61
				62
				63
		47,210	97	64
		48,544	100	65
13,455	26,910	48,544	100	66
				67
1.74	7.48	13.48		68
15	100	15		69
190	59	284		70

	BH	BI	BJ	BK	BL	BM	BN	BO	BP	BQ	BR	BS
1	**Standardized IGCC Gasifier Retrofit/Repower Application**									**Reference Coal -**		**Illinois #6**
2	**Mass & Energy Balance**			**GE 7191 F**						**Predicted Gasifier Output**		
3	Stream No.			18			19	Thrml NO (ppmvd)		25	20	
4	Identification			Fuel for Supplementary Firing			Flue Gas		SCR Red F	80%	Sat. Steam	
5	From			Gasifier			Boiler		R/L Red F	85%	Gasifier	
6	To			Boiler			Stack		NOx Reburn F	0%	Steam Turbine	
7	Gas	Mol Wt	lb/hr	lb/mol	wt %	mol%	lb/hr	mols/hr	wt %	mol%	lb/hr	
8												
9	CO	28.010	288,934	6.40	26.38	22.84	0	0.00	0.00	0.00		
10	H2	2.016	12,838	0.28	1.17	14.10	0	0.00	0.00	0.00		
11	CO2	44.010	129,300	2.86	11.80	6.51	1 `11,810	22990.45	22.03	14.59		
12	H2O	18.015	61,845	1.37	5.65	7.60	392,277	21775.02	8.54	13.81		
13	CH4	16.042	23,607	0.52	2.16	3.26	0	0.00	0.00	0.00		
14	C2H6	30.068	4,681	0.10	0.43	0.34	0	0.00	0.00	0.00		
15	H2S	34.076	81	0.00	0.01	0.01	0	0.00	0.00	0.00		
16	COS	60.070	24	0.00	0.00	0.00	0	0.00	0.00	0.00		
17	N2	28.013	560,153	12.40	51.14	44.28	3,051,426	108928.93	66.45	69.11		
18	Ar	39.948	9,799	0.22	0.89	0.54	53,342	1335.28	1.16	0.85		
19	HCl	36.461	0	0.00	0.00	0.00	0	0.00	0.00	0.00		
20	HCN	27.026	381	0.01	0.03	0.03	0	0.00	0.00	0.00		
21	NH3	17.030	3,756	0.08	0.34	0.49	0	0.00	0.00	0.00		
22	CS2	76.131	0	0.00	0.00	0.00	0	0.00	0.00	0.00	Stack Emissions (lb/MBtu)	
23	SO2	64.059	0	0.00	0.00	0.00	272	4.24	0.01	0.00	0.053	
24	NO	30.006	0	0.00	0.00	0.00	457	15.24	0.01	0.01	0.09	
25	O2	31.999	0	0.00	0.00	0.00	82,365	2573.99	1.79	1.63		
26	NaCl	58.497	0	0.00	0.00	0.00	0	0.00	0.00	0.00		
27	KCl	74.596	0	0.00	0.00	0.00	0	0.00	0.00	0.00		
28	Total Gas (lb/hr)		1,095,400	24.26	100.00	100.00	4,591,939	157623.15	100.00	100.00		
29							4,591,949	bal chk				
30	Volumetric Flow Rates (STP 14.7 psia, 59F)											
31	(acfm)		47,353				1,365,240					
32	(scfm)		285,129				995,183					
33												
34	Heat (BTU/lb)										1204	
35	Cp (BTU/lb F)		0.334				0.257					
36	HHV (BTU/lb)		2548.9				0.0					
37	LHV (BTU/lb)		2330.0				0					
38	Sensible Heat above											
39	59 F Btu/lb steam		0				50					
40	Latent Heat of											
41	Water Btu/lb steam		0				89					
42												
43	Chemical Heat		2552.31				0.00					
44	(LHV) MBtu/hr											
45	Sensible Heat		410.23				228.11					
46	above 59 F MBtu/hr											
47	Latent Heat		239.72				407.97					
48	of Water MBtu/hr											
49	TotalHeat(MBtu/hr)		3202.27				636.08				285.44	
50				Steam Turbine Output			476.7	MWg				Fuel Expander
51												
52	C	12.011		180,717			275,948	275,948	0.00%			
53	H	1.008		27,229			43,586	43,586	0.00%			
54	O	16.000		314,122			1,167,297	1,167,297	0.00%			
55	N	14.007		563,444			3,051,647	3,051,640	0.00%			
56	S	32.060		89			136	136	0.07%			
57	CL2	35.500		1,085,601	sub-total		4,538,614	4,538,607	0.00%	sub-total		
58	H2O	18.016										
59	ZnFe2O4											
60	ZnS											
61	FeS											
62	Fe2O3											
63	ZnO											
64	ASH											
65	Total Solids											
66	Total Flow (pph)		1,095,400				4,593,780				280,942	
67												
68	Total Flow (pps)		304				1276.05				78.04	
69	Pressure (psia)		279.7				14.7				350	
70	Temperature (F)		1180				252				432	

BS	BT	BU	BV	BW
is #6	J-1538	DE-AC21-89MC26291		1
	Revision 3		10/17/90	2
			21	3
			Process Stm	4
			Stm Turbine	5
			Process Facility	6
			lb/hr	7
				8
				9
				10
				11
				12
				13
				14
				15
				16
				17
				18
				19
				20
				21
				22
				23
				24
				25
				26
				27
				28
				29
				30
				31
				32
				33
				34
				35
				36
				37
				38
				39
				40
				41
				42
				43
				44
				45
				46
				47
				48
				49
Expander Power	55.8	MWg		50
				51
				52
				53
				54
				55
				56
				57
				58
				59
				60
				61
				62
				63
				64
				65
			0	66
				67
			0.00	68
			230	69
			420	70

DATE
FILMED
3/26/92

I