Conf-930445--28

UCRL-JC-115032
PREPRINT

The Development and Testing of a Backscatter Absorption Gas Imaging (BAGI) System Designed to Image at a Range of 300 m

T.J. Kulp
R. Kennedy
M. Delong
G. Garvis
J. Stahovec

This paper was prepared for submittal to the
Proceedings of the SPIE Conferenece on Opto-Electronic Aerospace and Remote Sensing-Advanced Applications of Laser Radar
Orlando, FL
April 11-17, 1993

April 1993

Lawrence Livermore National Laboratory

This is a preprint of a paper intended for publication in a journal or proceedings. Since changes may be made before publication, this preprint is made available with the understanding that it will not be cited or reproduced without the permission of the author.

MASTER

DISTRIBUTION OF THIS DOCUMENT IS UNLIMITED

DISCLAIMER

This document was prepared as an account of work sponsored by an agency of the United States Government. Neither the United States Government nor the University of California nor any of their employees, makes any warranty, express or implied, or assumes any legal liability or responsibility for the accuracy, completeness, or usefulness of any information, apparatus, product, or process disclosed, or represents that its use would not infringe privately owned rights. Reference herein to any specific commercial products, process, or service by trade name, trademark, manufacturer, or otherwise, does not necessarily constitute or imply its endorsement, recommendation, or favoring by the United States Government or the University of California. The views and opinions of authors expressed herein do not necessarily state or reflect those of the United States Government or the University of California, and shall not be used for advertising or product endorsement purposes.

The Development and Testing of a Backscatter Absorption Gas Imaging (BAGI) System Designed to Image at a Range of 300 m

Thomas J. Kulp, Randall Kennedy, Michael Delong, and Darrel Garvis
Geophysical and Environmental Research Program
Lawrence Livermore National Laboratory
Livermore, CA 94550

Joe Stahovec
Office of Salvage and Diving, Naval Sea Systems Command, Washington, D.C.

INTRODUCTION

The backscatter absorption gas imaging (BAGI) technique is a laser remote sensing method that fuses the chemical detection attributes of chemical lidar with the visualization capability of imaging laser radar (ladar) to allow real-time television images of invisible gas plumes to be made. The BAGI technique is carried out by actively imaging a scene with radiation having a wavelength absorbed by the gas to be visualized. Gas plumes present in the scene become visible in the image when they attenuate a portion of the backscattered radiation. Currently, all BAGI instruments that have been developed operate in the infrared (IR) and image gases via their fundamental vibrational transitions. The laser sources that have been used are the CO_2 and the IR helium neon (HeNe). The former provides tunable radiation at wavelengths in the range between 9 and 11 μm, allowing many organic species to be detected; the latter emits at 3.39 μm and has been used primarily for methane leak location. For further general discussions of the BAGI technique, the reader is referred to earlier publications [1-3].

The target range at which the current BAGI instruments are capable of operating varies between about 6 and 110 m. The imaging device used in those systems is an active raster-scanner that scans the beam of a continuous wave (CW) laser and the instantaneous field-of-view (IFOV) of an infrared detector. The range performances of the past systems have differed primarily because of differences in their laser power and detector sensitivity. The range performance of the scanned imager has been discussed in a recent paper [1], where the projections of a simple system model have been presented and compared with experimental results.

In this paper, we summarize the design and preliminary performance evaluation of a new raster-scanning BAGI imager that is intended for long-range operation, at a target range of 300 m. A system capable of imaging at this range is desired to make airborne gas imaging from a low-flying airplane or helicopter possible. The system uses a 20 W CO_2 laser and a redesigned scanner that employs telescopic transmission and receiving optics. Model predictions of the performance of the new system and some recent field testing results are presented. Issues relating to gas imaging at long ranges will also be discussed.

RANGE PERFORMANCE OF EARLIER BAGI IMAGERS

In order to optimize the ratio of active to passive radiation collected, a raster-scanning approach was chosen for the initial BAGI active imagers. The optical layout of the original system is shown in Figure 1. Scanning is accomplished using a pair of synchronized galvanometrically-driven scan mirrors, operating at 3933 Hz (horizontal sine wave; 7866 Hz line rate) and 60 Hz (vertical). The concerted motion of the mirrors serves to sweep the 4 mrad divergence IFOV of the IR detector and the beam of the laser source across the target in a raster pattern. Through the use of the tab on the horizontal mirror, the reflective areas used by the laser and IFOV are spatially separated, thus reducing the possibility of mirror-generated backscatter entering the return optical path. Table I contains a listing of the BAGI systems that have been developed to date, and the laser sources used in them.

Table I. Existing BAGI Imagers

System	Laser Power (W)	Wavelength Range (μm)	Imaging Range (m)
Man-portable, CO_2	5	9-11	30
Intermediate range, CO_2	20	9-11	125
IR HeNe*	0.020	3.39	6

*developed at Laser Imaging Systems, Punta Gorda, FL

The range performance of the scanned imager is dictated by a number of factors related to its optical design [1]. These include the power of the laser source, the optical transfer efficiency of the transmission and receiving optics, the dimensions of the collection aperture, and the noise-equivalent power (NEP) of the detector. Imaging range is also influenced by the target reflectivity (because a solid target is required) and the atmospheric transmittance at the operating wavelength. Finally, some less tangible elements affecting gas imaging range include air movement and thermal gradients, which affect laser speckle within the image and the local gas concentration and motion of the gas plume.

As shown in Table I, past work has demonstrated ranges of approximately 30 m (using a 5W laser) and 125 m (using a 20 W laser) for the original CO_2 laser-based scanner design. The range measurements were made imaging sulfur hexafluoride emissions against target panels having reflectivities comparable to those expected for average "real-world" surfaces. The materials used in the tests are indicated in Table II. The materials SiC80C and SiC400A are silicon carbide paper panels that were described in Reference [3]. In each case, the imager was mounted in a vehicle and moved away from the target panels in incremental steps. The target panels were mounted on a framework to be oriented perpendicularly to the ground. Imaging was accomplished parallel to the ground with the imaging line-of-sight located about 2 m above the ground.

According to the simple model for the direct detection BAGI system [1], the laser power (W) required to image at a given range is calculated according to:

$$P_L = \frac{48\, R^2 P_N}{\pi\, d^2\, \tau_{AL}^2 \beta\, \eta_{TL}\, \eta_{RL}}$$

where:

P_N	is the detector NEP
d	is the aperture diameter
τ_{AL}^2	is the atmospheric transmittance
η_{TL}	is the transmitter efficiency
η_{RL}	is the receiver efficiency
β	is the target reflectivity

Figure 2 contains a plots of the laser power predictions for the original BAGI scanner design. Also plotted on the graph is the range attained using the 5 and 20 W lasers. Although the determination of the ultimate imaging range is somewhat subjective, the observed performance matches the model performance quite accurately.

Table II. Test Target Reflectivities (sr^{-1} @ 10.6 μm)

Target Material	Reflectivity
Sandblasted Al	0.254
Abrasive SiC80C	0.025
Abrasive SiC400A	0.054

DESIGN OF THE LONG-RANGE BAGI IMAGER

In considering an extended-range imager operating in the mid-IR, one is confronted with the choice between heterodyne and direct modes of detection. Heterodyne detection offers the possibility of photon-limited signal-to-noise ratios, whereas direct detection is background limited. Thus, for the same laser power, much greater ranges can be achieved with heterodyne imaging. There are, however, practical considerations that favor direct detection. Heterodyne detection is strongly affected by laser speckle. Images produced in that mode possess strong contrast variations as a result, which is undesirable in a device that will be used to image low contrast features. Furthermore, heterodyne detection requires much stricter alignment tolerances than a direct system. For these latter reasons, direct detection has been used in all BAGI systems and was chosen to be used in the long-range system.

Improvements to the imager range performance can be considered using Equation (1) and knowledge of the past field results. According to the standard lidar-type equation, imaging range varies approximately linearly with the collection aperture and in proportion to the square-root of the laser power. Thus, there is less of a benefit in increasing laser power than there is in modifying the collection aperture. Furthermore, for the CO_2 laser-based imager, compact and rugged commercial line-tunable lasers that operate at single-line power levels above 20W are not available (for compactness and ruggedness, we have limited our search to waveguide laser sources). Finally, for power levels significantly above 20 W, cooling and optical damage to elements of the system becomes a greater consideration.

Given these considerations, we chose to retain a 20W line-tunable laser source for the long-range BAGI imager and employ a larger collection aperture to increase system range. The increase in the collection aperture is accomplished using a 5x telescope in combination with a

modified galvo mirror mechanism. Originally, an off-axis, all-reflective telescope was chosen to be used for the system. In that approach, the laser and IFOV would enter the scope from the original BAGI scanner mechanism, shown in Figure 1. That design was discarded due to (a) the high cost of manufacturing the telescope, (b) uncertainties regarding backscatter crosstalk between the laser and IFOV (generated within the telescope), and (c) the large size of the telescope.

The optical design that was ultimately chosen is shown in Figure 3. A photograph of the assembled breadboard-mounted imager is shown in Figure 4. It employs 5X magnification refractive optics to transmit and collect the radiation. Each telescope is an identical four-element zinc-selenide design (manufactured by II-IV, Inc Saxonburg, PA) anti-reflection coated for 10.6 microns. Because on-axis backscatter from lens surfaces is an enormous problem in a refractive system, it was decided that the optical transmission and receiving paths would be completely separated using the scanner design of Fig. 3. To accomplish this, the laser is scanned using a polished surface on the rear of the horizontal scan mirror. From that point, the beam is redirected down to the vertical mirror using a corner cube reflector. The IFOV is scanned, as in the past, from the front surface of the horizontal scan mirror, whereopon it travels directly downward to the vertical mirror. Note that a redesigned beryllium vertical scan mirror is used that is much larger than the corresponding mirror of the original scanner, so that it can accommodate the footprints of the laser and IFOV in two distinctly separated regions. In addition, baffles (not shown in the diagram) are used to optically isolate the laser transmission and receiving path from each other. Upon leaving the vertical mirror, the scanned laser and IFOV paths enter their respective telescopes. The IFOV path is translated perpendicularly to the axis of the scanner using a periscope, in order to make room for the two telescope objective lenses. As seen in Fig. 3, one periscope mirror is used prior to the IFOV telescope, while the other is located between the eyepiece and objective lenses. Overlap of the laser and IFOV raster scans at the target is accomplished by translating the IFOV objective lens perpendicularly to the beam axis to aim the IFOV scan at the appropriate region on the target plane.

The laser that was selected to be used in the prototype imager is a 20 W tunable waveguide CO_2 system manufactured by Laser Photonics (Orlando, FL). Given its nominal 7 mrad divergence, the beam of the laser is passed through a 3x beam expander prior to being injected into the scanner. Tests described here were done prior to the use of the waveguide source, instead employing a 20 W glass tube laser that was used in the earlier CO_2 laser-based system [3].

The 5X magnification increases the collection aperture of the system by a factor of 5. It also reduces the maximum field-of-view of the scanner and the laser and IFOV divergences by the same factor. Thus, the maximum working field-of-view is reduced from 18° to 3.6° and the IFOV and laser divergences are reduced to about 0.8 mrad. Obviously, the reduced field-of-view is a tradeoff that must be considered in expanding the system collection aperture using a telescope.

FIELD TESTING OF THE LONG-RANGE BAGI IMAGER

The range performance expected using the long-range BAGI imager is shown in Figure 5. That curve was generated using Equation (1) and the parameters indicated in Table III. It also incorporates an overlap loss caused by time-of-flight losses experienced by the imager. The finite time-of-flight of the laser radiation in transit to and from the target can cause a loss of collection efficiency at long distances (i.e., the IFOV advances to the next pixel before the radiation from the previous pixel arrives). The magnitude of the loss is dependent upon the zoom setting, because it depends upon mirror velocity. Ultimately, we will correct for time-of-flight losses using an acousto-optic deflector; however, this was not implemented at the time of the tests. The optical transfer efficiencies of the transmission and receiving paths, shown in Table III, do not

incorporate this loss. They were obtained by adding the losses measured using a CO_2 laser and the individual optical elements. The largest loss occurs in the transmission path at the point where the laser is reflected on the horizontal scan mirror. That loss (33%) is high because the reflective region is slightly too small to accommodate the entire beam. For the upgraded version of the scanner (under construction at this time), a mirror with a larger rear surface is being built. Nonetheless, the range prediction indicates that a relatively low (12 W) is necessary to achieve the target range of 300 m.

Table III. System Parameter Values for the Long-Range Imager

d (cm)	6.0
k (m^{-1})	4×10^{-4}
NEP (nW)	0.2
β (sr^{-1})	0.03
η_{TL}	0.66
η_{RL}	0.83

The first evaluation of the breadboard imager was carried out during the fall of 1992 at LLNL. The test was performed in a similar fashion to the last test, although the imager remained stationary while the target panels were moved away from it on a truck-mounted framework. Only the two silicon carbide panels listed in Table II were used. The target was imaged at ranges between 60 and 300 m (200 and 1000 ft) as a plume of sulfur hexafluoride was released in front of it. At each range, the system was aligned by focusing the telescopes and adjusting the transverse position of the IFOV objective element to maintain overlap between the laser and IFOV raster patterns. Video images were collected on an ordinary VHS videocassette recorder.

During the tests, gas imaging was attempted at ranges up to 300 m (1000 ft). Images of visually acceptable signal-to-noise ratio were obtained at ranges up to about 227 m (750 ft). Some sample images, obtained at a range of 152 m are shown in Figure 6. Beyond 227 m, there was a notable deterioration in the image quality, caused by a combination of the reduced return signal and by increased intensity modulations caused by laser speckle. The intensity modulations were especially troublesome at long ranges because they exhibited a motion that was very similar in appearance to that of the gas plume. It is certain that this effect was observed at its worst case because, at a height of about 2 m from the ground and with site temperatures of ~90°F, the imaging path traveled the distance to and from the target through a strong thermal gradient. If a BAGI system was deployed in a downlooking mode (such as from a helicopter), in which only a small portion of the optical path traveled through the turbulent zone at the surface, it is conceivable that this problem would not be as severe.

In comparing the measured performance to the predicted performance, it is clear that, although we achieved 75% of the target range, the system did not meet the model expectations. Apart from an obvious misalignment of the system, possible explanations for this include losses unrepresented in the model due to atmospheric turbulence (i.e. defocusing of the laser beam), and other losses that were unaccounted for in the optical system. Work is currently being done to correct these problems. The breadboard system is being converted to a standalone prototype. In doing so, an acousto-optic deflector is being incorporated into the imager to correct for the time-of-flight mismatch and a complete throughput analysis of the system is being carried out. Final field evaluations of the prototype will be carried out following its completion.

REFERENCES

1. T.G. McRae and T.J. Kulp, "Backscatter Absorption Gas Imaging — A New Technique for Gas Visualization," *Opt.* 32 4037-4050 (1993).

2. T.J. Kulp, and T.G. McRae, "The Application of Backscatter Absorption Gas Imaging (BAGI) to the Detection of Chemicals Related to Drug Production," in *Proceedings of SPIE, Law Enforcement Sensors*, ((Society of Photo-Optical Instrumentation Engineers, Bellingham, WA, 1991), Vol. 1479, pp. 352-363.

3. T.J. Kulp, R. Kennedy, D. Garvis, L. Seppala, and D. Adomatis, "Further Advances in Gas Imaging — Field Testing of an Extended-Range Gas Imager," in Proceedings of the International Conference on Lasers '90 (Society for Optical and Quantum Electronics, McLean, VA, 1990), pp. 407-413 (1991).

This work was performed under the auspices of the U.S. Department of Energy by Lawrence Livermore National Laboratory under contract No. W-7405-Eng-48.

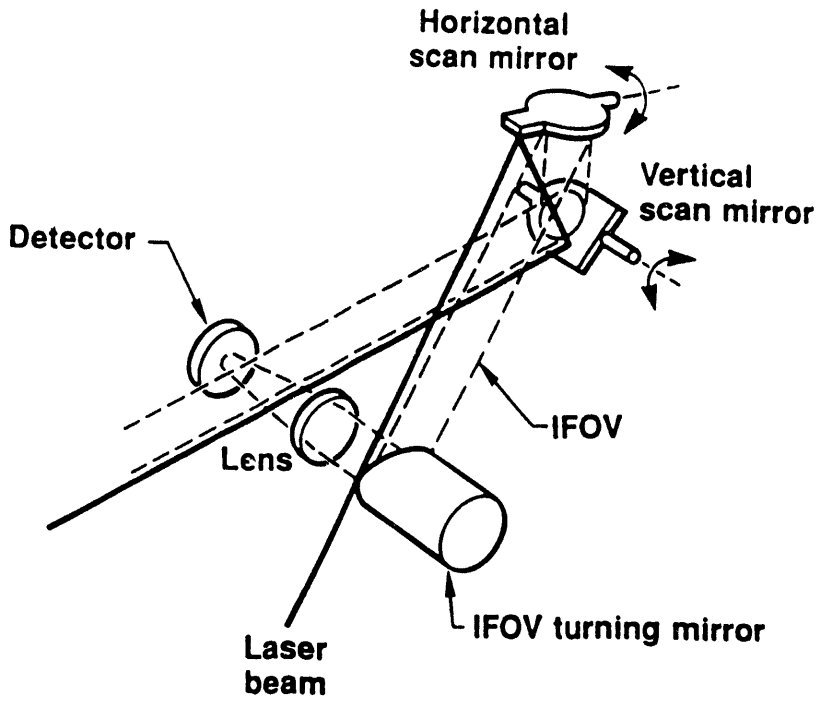

Figure 1. Diagram of the optical layout of the original BAGI scanner

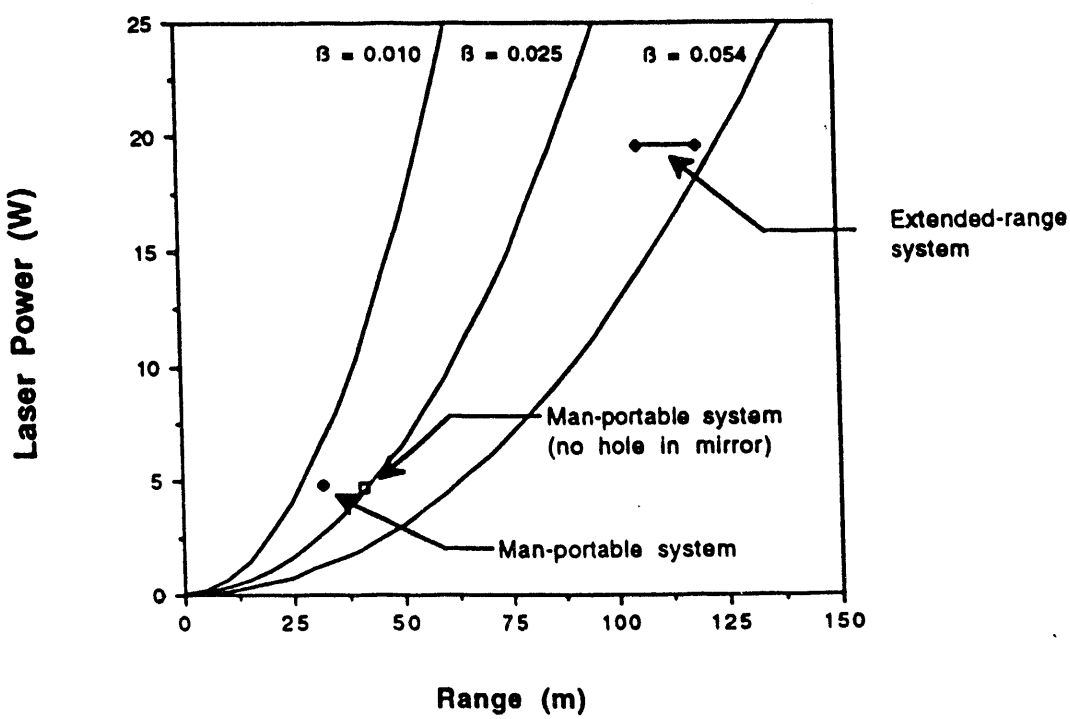

Figure 2. Range performance predictions and measurements for the original BAGI scanner.

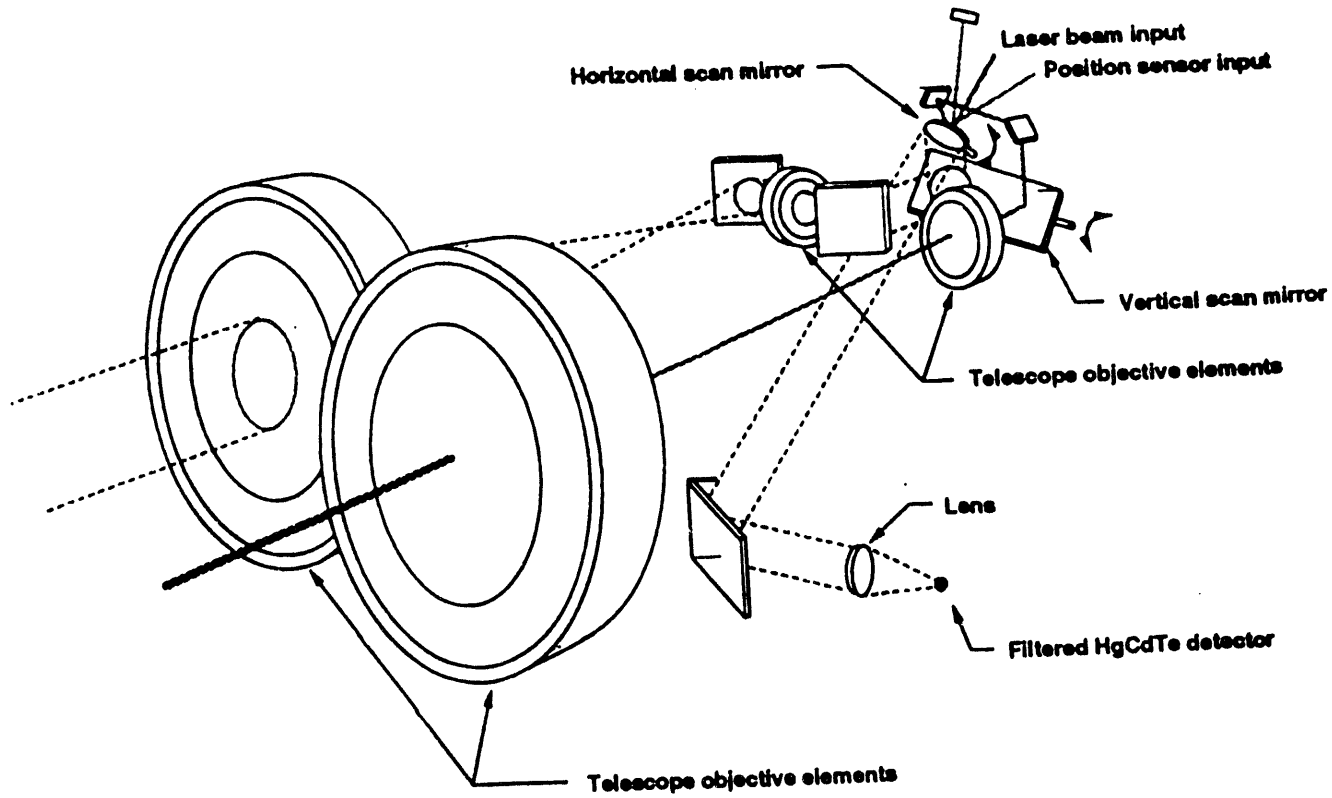

Figure 3. Optical layout of the long-range BAGI imager.

Figure 4. Photograph of the breadboard long-range BAGI imager

Figure 6. Four images taken at a range of 152 m with the long-range imager. The square region is the silicon carbide targets. The black areas on targets are sulfur hexafluoride emissions.

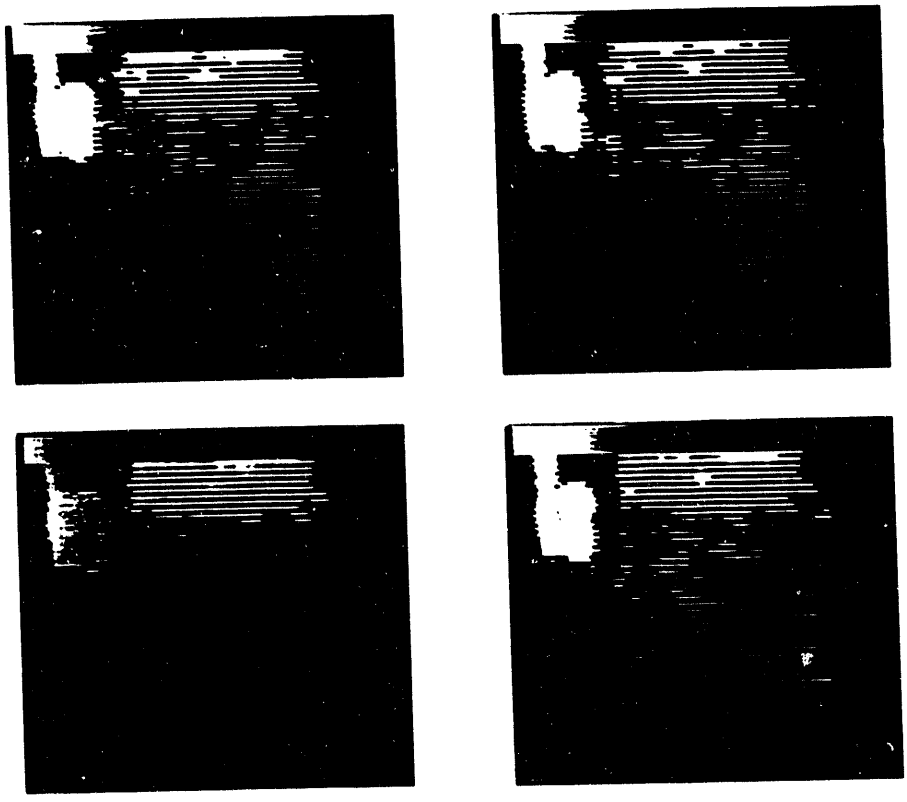

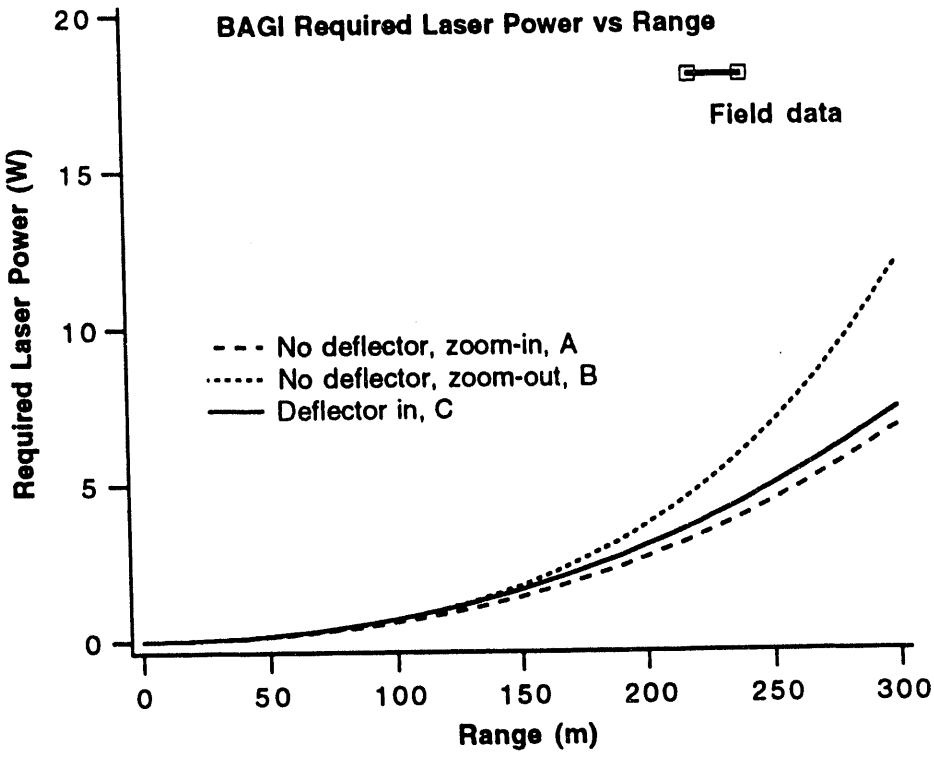

Figure 5. Laser power required to image as a function of range for the long-range imager. Curves A and B are for present case (no acousto-optic deflector) and represent power requirement as a function of system zoom. Curve C represents power requirement with deflector, assuming an 80% transmission for deflector.

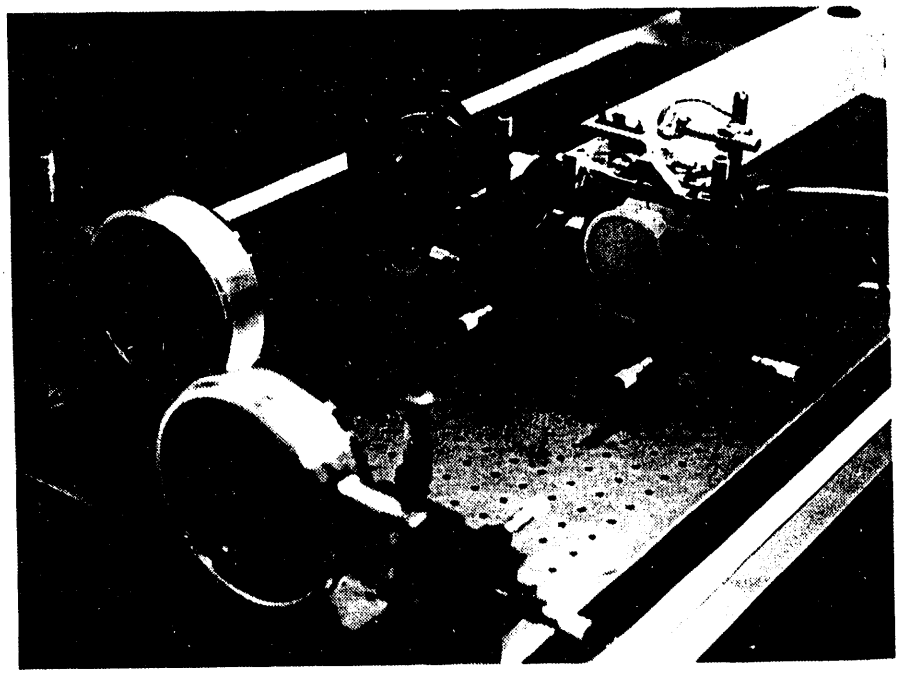

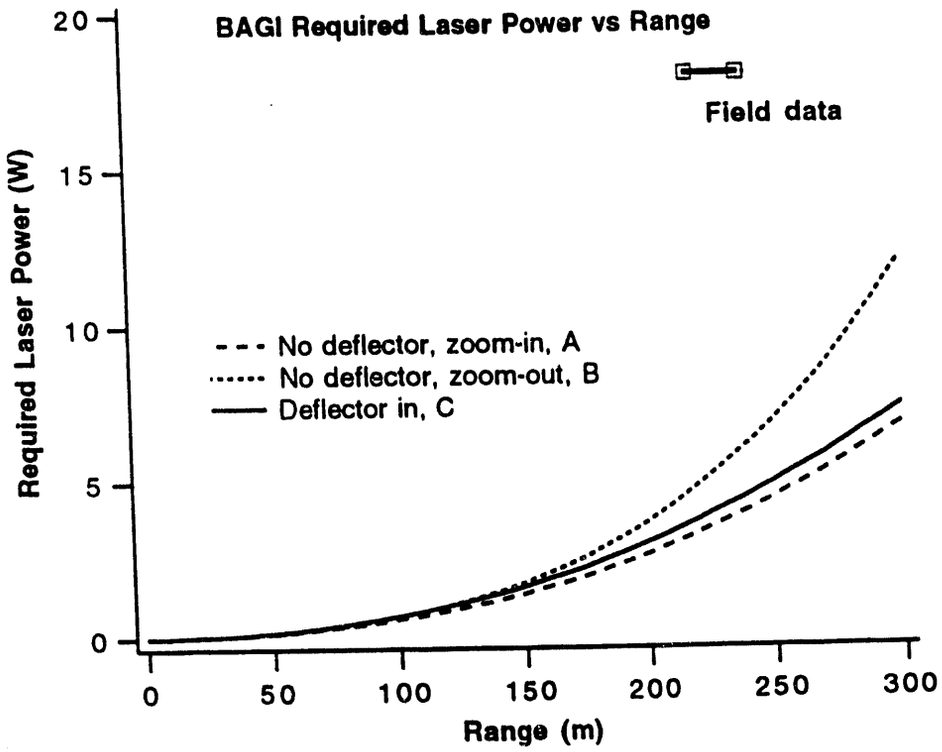

Figure 5. Laser power required to image as a function of range for the long-range imager. Curves A and B are for present case (no acousto-optic deflector) and represent power requirement as a function of system zoom. Curve C represents power requirement with deflector, assuming an 80% transmission for deflector.

END

DATE FILMED

3/14/94