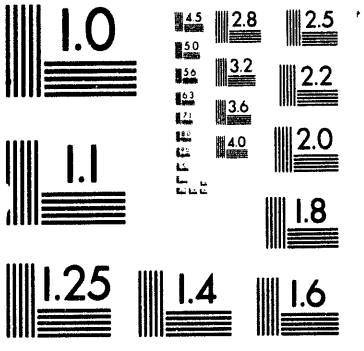
1.0
4.5
2.8
2.5
5.0
5.6
3.2
2.2
6.3
7.1
3.6
2.0
4.0
1.1
1.8
1.25
1.4
1.6

1 of 1

Conf-931094--1

DOE/MC/21023-94/C0271

The Advanced PFB Process: Pilot Plant Results and Design Studies

RECEIVED
NOV 17 1993
OSTI

Authors:
A. Robertson
W. Domeracki
D. Horazak
R. Newby
A. Rehmat

Contractor:
Foster Wheeler Development Corporation
12 Peach Tree Hill Road
Livingston, NJ 07039

Contract Number:
DE-AC21-86MC21023

Conference Title:
12th EPRI Conference on Gasification Power Plants

Conference Location:
San Francisco, California

Conference Dates:
October 27-29, 1993

Conference Sponsor:
Electric Power Research Institute

MASTER

DISTRIBUTION OF THIS DOCUMENT IS UNLIMITED

DISCLAIMER

This report was prepared as an account of work sponsored by an agency of the United States Government. Neither the United States Government nor any agency thereof, nor any of their employees, makes any warranty, express or implied, or assumes any legal liability or responsibility for the accuracy, completeness, or usefulness of any information, apparatus, product, or process disclosed, or represents that its use would not infringe privately owned rights. Reference herein to any specific commercial product, process, or service by trade name, trademark, manufacturer, or otherwise does not necessarily constitute or imply its endorsement, recommendation, or favoring by the United States Government or any agency thereof. The views and opinions of authors expressed herein do not necessarily state or reflect those of the United States Government or any agency thereof.

This report has been reproduced directly from the best available copy.

Available to DOE and DOE contractors from the Office of Scientific and Technical Information, P.O. Box 62, Oak Ridge, TN 37831; prices available at (615) 576-8401.

Available to the public from the National Technical Information Service, U.S. Department of Commerce, 5285 Port Royal Rd., Springfield, VA 22161; phone orders accepted at (703) 487-4650.

THE ADVANCED PFB PROCESS: PILOT PLANT RESULTS AND DESIGN STUDIES

A. Robertson
Foster Wheeler Development Corporation
12 Peach Tree Hill Road
Livingston, New Jersey 07039

W. Domeracki
Westinghouse Power Generation Business Group
The Quadrangle, 4400 Alafaya Trail
Orlando, Florida 32826-2399

D. Horazak
Gilbert/Commonwealth
Route 10 and Pheasant Road
Green Hills, Pennsylvania 19607

R. Newby
Westinghouse Science & Technology Center
1310 Beulah Road
Pittsburgh, Pennsylvania 15235

A. Rehmat
Institute of Gas Technology
3424 South State Street
Chicago Illinois 60616

Abstract

Research is being conducted under a U.S. DOE contract to develop a new type of coal-fueled plant for electric power generation. This new type of plant—called an advanced or second-generation pressurized fluidized bed (PFB) combustion plant—offers the promise of 45-percent efficiency (HHV) with both emissions and a cost of electricity that are significantly lower than conventional pulverized-coal-fired plants with scrubbers. This paper summarizes the pilot plant R&D work being conducted to develop this new type of plant. Although pilot plant testing is still under way, preliminary estimates indicate the commercial plant will perform better than originally envisioned.

APPROVED FOR RELEASE OR
PUBLICATION, METC PATENT
ADVISOR
By L. Jan Date 9/24/93

Introduction

Under U.S. DOE Contract DE-AC21-86MC21023, Foster Wheeler Development Corporation (FWDC) is leading an R&D program to develop a new generation of coal-fueled electric power generation plants. The plants are to operate with efficiencies markedly higher than and stack emissions and costs of electricity markedly lower than present plants. When coupled with a conventional 16.5 MPa gage/538°C/538°C/8.5 kPa (2400 psig/1000°F/1000°F/2.5 in. Hg) steam cycle, the quantitative goal is a 45-percent plant efficiency (coal higher heating value basis) and a cost of electricity at least 20 percent lower than that of a conventional pulverized-coal (PC)-fired plant with a wet stack gas scrubber.

Proposed Plant

The plant being developed is a hybrid of two technologies; it incorporates the partial gasification of coal in a vessel called the carbonizer and the combustion of the resultant char residue in a circulating pressurized fluidized bed combustor (CPFBC). The plant, called an advanced or second-generation PFB, is shown in block diagram form in Figure 1.

In this plant, coal is fed to a pressurized carbonizer that produces a low-Btu fuel gas and char. After passing through a cyclone and a ceramic barrier filter to remove gas-entrained particulates, the fuel gas is burned in a topping combustor to produce the energy required to drive a gas turbine. The gas turbine drives a generator and a compressor that feeds air to the carbonizer, a CPFBC, and a fluidized bed heat exchanger (FBHE). The carbonizer char is burned in the CPFBC with high excess air. The vitiated air from the CPFBC supports combustion of the fuel gas in the gas turbine topping combustor.

Steam generated in a heat-recovery steam generator (HRSG) downstream of the gas turbine and in the FBHE associated with the CPFBC drives the steam turbine generator that furnishes the balance of electric power delivered by the plant.

The low-Btu gas is produced in the carbonizer by pyrolysis/mild devolatilization of coal in a fluidized bed reactor. Because this unit operates at temperatures much lower than gasifiers currently under development, it also produces a char residue. Left untreated, the fuel gas will contain hydrogen sulfide and sulfur-containing tar/light oil vapors; therefore, lime-based sorbents are injected into the carbonizer to catalytically enhance tar cracking and to capture sulfur as calcium sulfide. Sulfur is captured in situ, and the raw fuel gas is fired hot. Thus the expensive, complex, fuel gas heat exchangers and the chemical or sulfur-capturing bed cleanup systems that are part of the coal gasification combined-cycle plants now being developed are eliminated.

The char and calcium sulfide produced in the carbonizer and contained in the fuel gas as elutriated particles are captured by high-temperature filters, rendering the fuel gas essentially particulate-free and able to meet New Source Performance Standards (NSPS). The captured material, with carbonizer bed drains, is collected in a central hopper and injected into the CPFBC through a nitrogen-aerated nonmechanical valve. The high excess air in the combustor subsystem transforms the calcium sulfide to sulfate, allowing its disposal with the normal CPFBC spent sorbent.

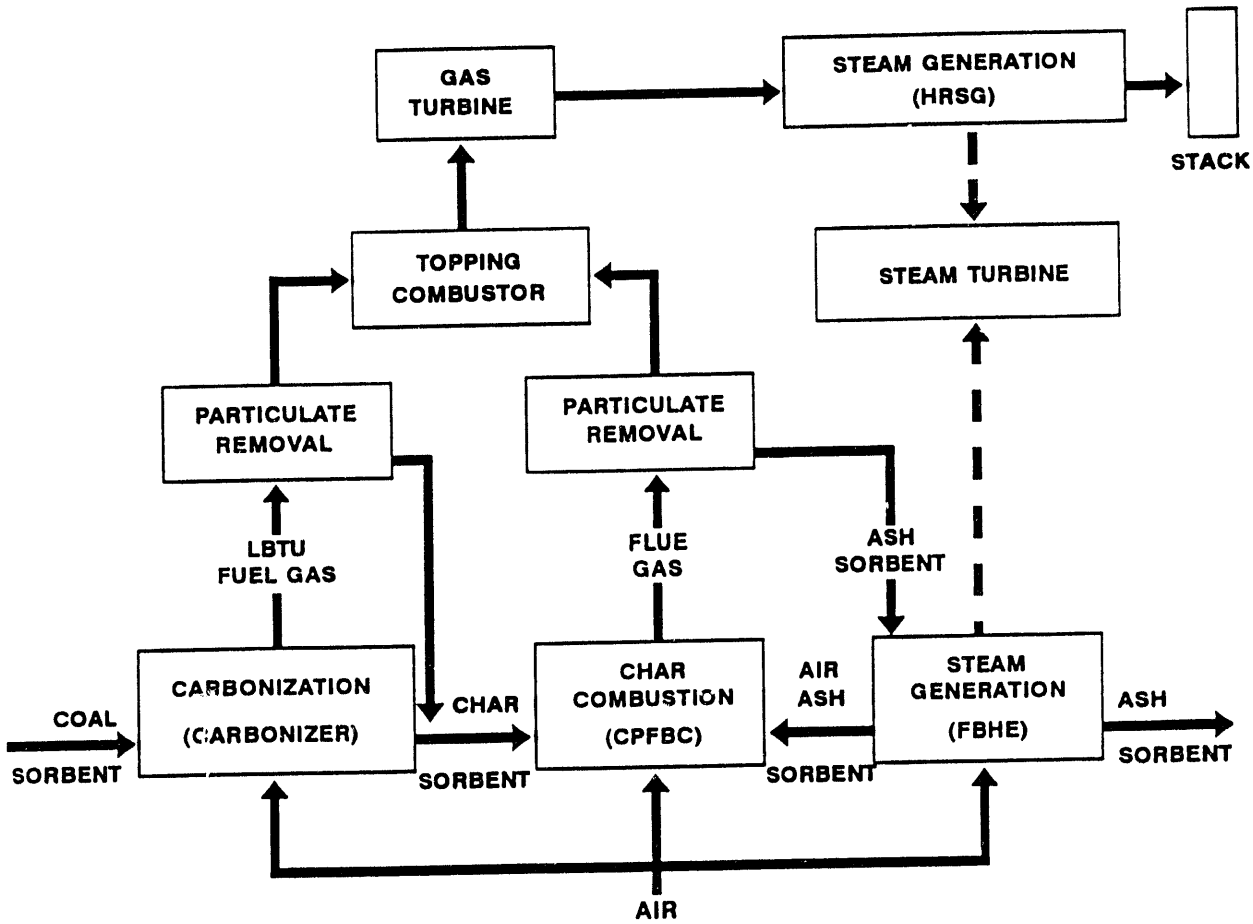

Figure 1 Simplified Process Block Diagram—Second-Generation PFB Combustion Plant

In the CPFBC, the burning char heats the high-excess-air flue gas to 871°C (1600°F); any surplus heat is transferred to the FBHE by sorbent recirculation between the two units. Controlled recirculation is done with cyclone separators and nonmechanical valves. All cooling tube surfaces are placed in the FBHE. Because of the low fluidizing velocity in the FBHE [152 mm/s (≤1/2 ft/s)], the risk of tube erosion is virtually eliminated.

The exhaust gases leaving the carbonizer and the CPFBC contain particles of char, sorbent, and fly ash—all of which can erode and foul downstream equipment. A hot gas cleanup (HGCU) system, consisting of ceramic barrier filters preceded by cyclone separators, cleans these gases to <20 ppm solids loading before they enter the fuel gas topping combustor and the gas turbine.

The topping combustor, which consists of metallic-wall multiannular swirl burners (MASBs), is provided in two external combustion assemblies on opposite sides of the gas turbine. Each MASB contains a series of swirlers that aerodynamically create fuel-rich, quick-quench, and fuel-lean zones to minimize NO_x formation during the topping combustion process. The swirlers also provide a thick layer of air at the wall boundary to control the temperature of the metallic walls.

To help us develop this new type of plant, FWDC has assembled a team of companies consisting of Foster Wheeler Energy Corporation; Foster Wheeler USA; Gilbert/Commonwealth, Inc.; Institute of Gas Technology (IGT); Westinghouse Power Generation Business Unit (PGBU); and Westinghouse Science and Technology Center (STC). In the first phase of our three-phase DOE project, a conceptual design of a 3-percent-sulfur Pittsburgh No. 8 coal-fired second-generation PFBC plant with a conventional 16.5 MPa gage/538°C/538°C/ 8.5 kPa Hg (2400 psig/1000°F/1000°F/2.5 in. Hg) steam cycle was prepared and its economics were determined[1]. When operated with a 1.42 MPa/871°C (14 atma/1600°F) carbonizer, the plant efficiency was 44.9 percent (based on the higher heating value of the coal), and its cost of electricity was 21.8 percent lower than that of a conventional PC-fired plant.

Phase 2 Pilot Plant Testing

The R&D needs of this new type plant and an Integrated Program Plan for meeting these needs have been presented[2,3]. In accordance with that Plan, the key components of this new plant are being tested separately in Phase 2 to ascertain their individual performance characteristics. A series of topping combustor tests has already been conducted at the University of Tennessee Space Institute under the direction of Westinghouse PGBU[4-6]. These tests successfully proved the combustor concept, but the conversion of ammonia contained in the carbonizer fuel gas to NO_x was higher than expected. In June 1993, a 356-mm (14-in.) MASB that had been redesigned/modified to suppress this conversion was tested. Although test results will be the subject of a future paper, the observed ammonia-to-NO_x conversion levels were significantly reduced and approached the 8-percent level assumed in the Phase 1 conceptual plant design. In early 1994, a 457-mm (18-in.) MASB—the size planned for the Westinghouse Models 251 and 501 gas turbines—will be tested. Analytical

calculations indicate the longer residence time provided by this larger unit will result in even lower ammonia-to-NO_x conversions.

In November 1991 FWDC began operating a PFB pilot plant at its John Blizard Research Center in Livingston, New Jersey. The plant was designed to test a carbonizer first and then, after appropriate modifications, a CPFBC. The carbonizer was operated in two different modes—as a 254-mm (10-in.) ID jetting/bubbling bed (Figure 2) and then as a 203-mm (8-in.) ID circulating bed (Figure 3). The bubbling bed mode encompassed 533 hours of operation, 37 test points, 4 different fuels, and 2 different sorbents. Although the bulk of the testing was conducted with Pittsburgh No. 8 coal and Ohio Plum Run dolomite, Illinois No. 6 coal, Wyoming Eagle Butte coal, petroleum coke, and limestone were also tested. The jetting/bubbling fluidized bed carbonizer operated smoothly, was easily controlled, and performed better than originally estimated. The circulating bed mode was an exploratory four-point test to find out whether it offered any process advantages over the bubbling bed, but none were found. One of the questions raised in Phase 1 was whether the carbonizer fuel gas and char sorbent residue would foul and/or blind ceramic barrier filters. To address this question, a Westinghouse STC ceramic barrier filter was installed in the pilot plant; cross-flow elements were used with the bubbling bed and candles with the circulating bed. Although the tests were short, Westinghouse STC observed no compatibility problem[7]. Carbonizer pilot plant test results have been published[8-10], and the pilot plant has been modified for CPFBC testing (Figure 4).

The CPFBC is a vertical, refractory-lined, 76-cm (30-in.)-OD x 11-m (34 ft-6 in.)-tall pressure vessel. All cooling tube surfaces are in the FBHE. The risk of tube erosion is virtually eliminated by the low fluidizing velocity in the FBHE [≤152 mm/s (≤1/2 ft/s)]. The CPFBC primary zone is approximately 4 m (12 ft-6 in.) tall, and the secondary zone is about 5 m (16 ft) tall. Each is refractory lined to yield diameters of 127 and 203 mm (5 and 8 in.) respectively. Coal, sorbent, and pneumatic transport air are injected at the bottom of the unit at a 12- to 18-m/s (40- to 60-ft/s) jet velocity through a central, vertical, 1-in. Sch 80 stainless steel pipe. An outer, concentric, 2-in. Sch 40 pipe injects fluidizing air around and at the base of the feed pipe. A nitrogen-aerated packed-bed cooler at the bottom of the CPFBC cools spent bed material to 149°C (300°F) before depressuring in a lock hopper and its disposal.

The heat released during the combustion process is absorbed by a sorbent/fly-ash mixture continuously circulated between the CPFBC and the FBHE. A cyclone separator atop the FBHE and a nonmechanical L-valve at the bottom control the circulation of solids that enter the CPFBC about 365 mm (14-3/8 in.) above the fluidizing air.

The FBHE is a 1.1-m (42-in.)-OD by 11-m (34 ft-6 in.)-tall pressure vessel, refractory lined to yield a 457-mm (18-in.) square bed and freeboard section. A 1-m (39-in.)-tall (bottom-to-top tube centerline height) water-cooled tube bundle, consisting of eight 25.4-mm (1-in.)-OD Incoloy 800H tubes, is located in the bed; it cools the solids before their return to the CPFBC. An air sparger/pipe arrangement injects fluidizing air at the bottom of the bed and allows solids to flow downward into the L-valve or through the bed-drain cooling section.

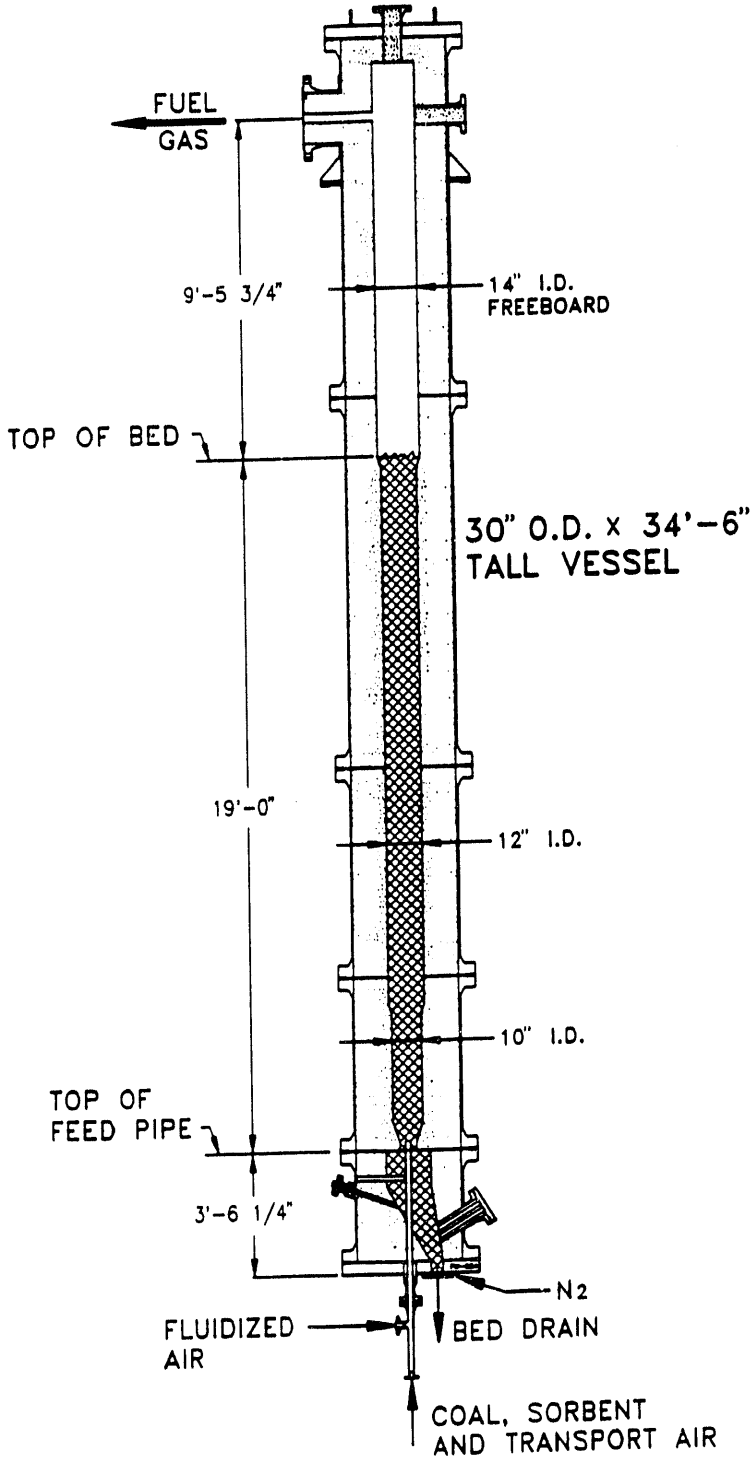

Figure 2 254-mm (10-in.) Carbonizer Test Unit

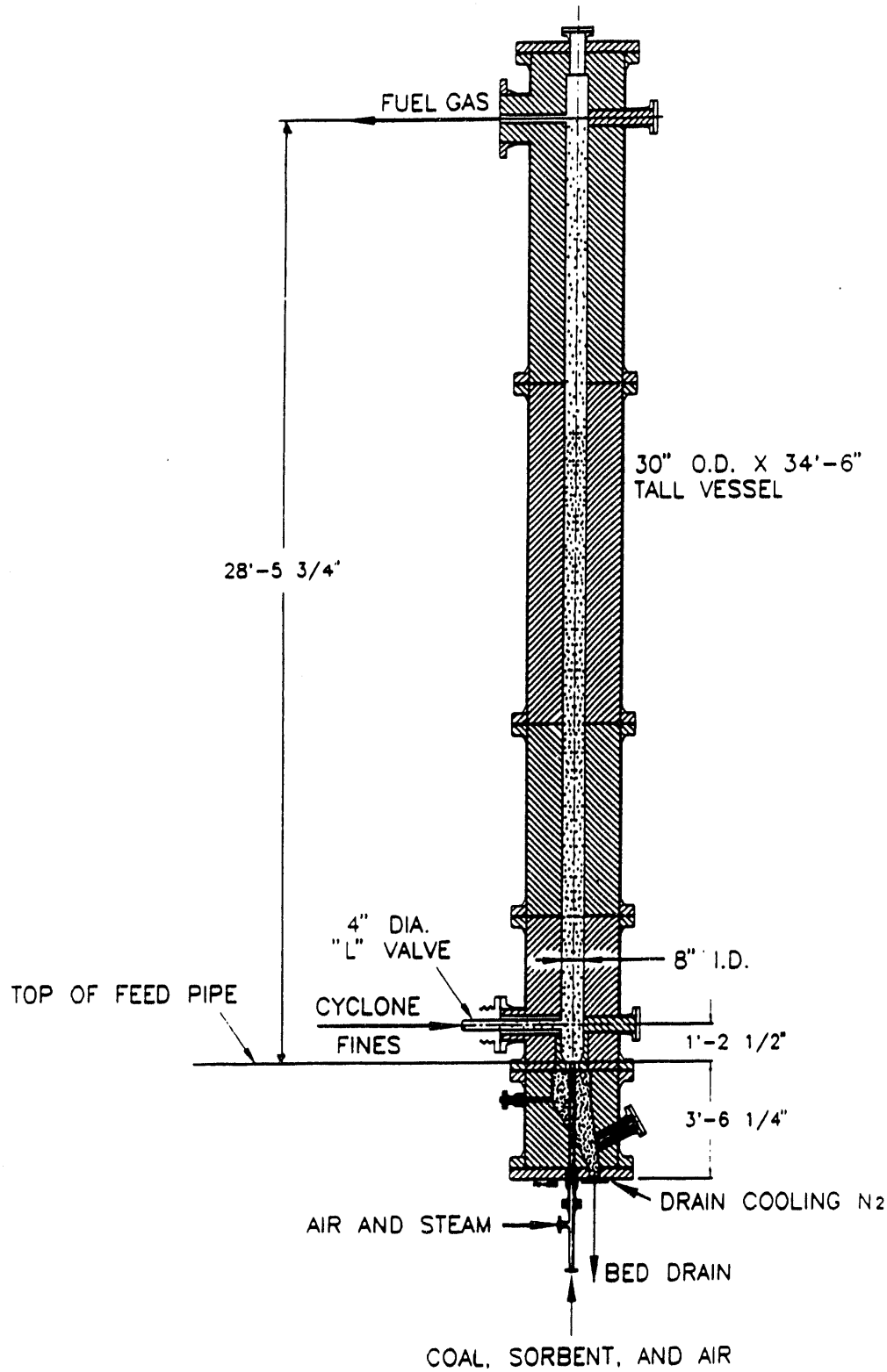

Figure 3 203-mm (8-in.) Circulating Bed Carbonizer Test Unit

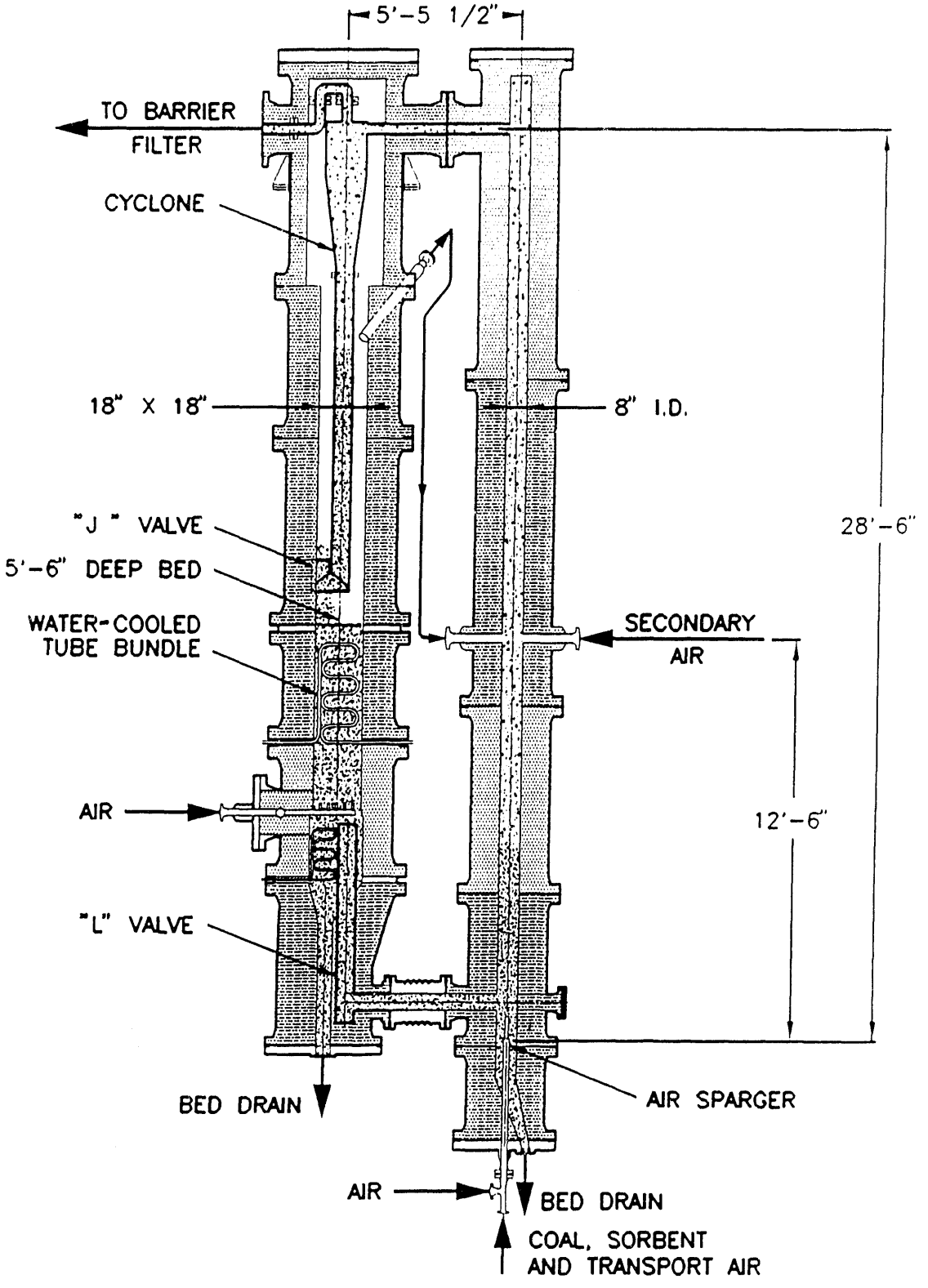

Figure 4 Integrated CPFBC/FBHE Unit—Phase 2

A screw feeder immediately below the FBHE controls the bed drain rate and bed height. By raising and lowering the bed height, the amount of tube surface immersed in the bed, and hence the bed and CPFBC solids return temperature, can be controlled. The fluidizing air leaves the top of the FBHE and enters the CPFBC as secondary air. A dip-leg J-valve arrangement at the bottom of the cyclone provides the necessary CPFBC/FBHE gas seal. The exhaust gas from the cyclone atop the FBHE proceeds to a ceramic barrier filter for final particulate removal. (Both candle and cross-flow types are available for testing.)

The CPFBC will be operated at about a 4-m/s (12-ft/s) superficial gas velocity to ascertain its performance characteristics. Operating pressures will range from 1.01 to 1.42 MPa (10 to 14 atma), temperatures from 843 to 871°C (1550 to 1650°F), primary zone stoichiometries from 50 to 80 percent, and excess air levels from 30 to approximately 210 percent. Pittsburgh No. 8 coal and Plum Run dolomite will be the primary feedstock combination. Illinois No. 6 and subbituminous Eagle Butte coal, petroleum coke, a limestone, and carbonizer-generated char-sorbent residue will also be tested. At the CPFBC design point [14.2 MPa (14 atma), 871°C (1600°F), 4 m/s (12 ft/s), 30-percent excess air], the gross heat input will be 1.5 MW [5.1(10^6) Btu/h].

Upon completing CPFBC testing in 1994, the plant will be returned to the bubbling bed carbonizer mode and another train of vessels, with a 330-mm (13-in.)-ID by 14-m (45-ft)-tall CPFBC, will be installed. With this addition, the carbonizer and CPFBC will be operated as an integrated subsystem, with testing (Phase 3) in 1995.

Commercial Plant Update

When the Phase 1 plant design was prepared, no carbonizer had ever been operated at the proposed plant conditions, but many of the phenomena involved in such a unit had been investigated separately. By correlating and extrapolating the limited amount of data available in the literature, FWDC estimated the expected commercial plant carbonizer performance. Based on the completed pilot plant test program, FWDC has reestimated the performance of the 871°C (1600°F) carbonizer. Using the same Pittsburgh No. 8 coal and Plum Run dolomite sorbent, which are pneumatically injected into the unit, the revised carbonizer performance is presented in Figure 5. Compared with the Phase 1 estimate, we now predict that the carbonizer:

- Fuel gas heating value will be 11 percent higher
- Sulfur-capture efficiency will be 94 percent rather than 86 percent
- Fuel gas will contain 15 percent less ammonia.

All of the improvements will increase the attractiveness of the plant. The last two items will reduce plant emissions; the first will shift the plant to a new and higher topping combustor firing temperature that will further increase plant efficiency. The interaction of fuel gas energy content with optimum topping combustor temperature and plant efficiency is discussed in the Phase 1, Task 2 Report[2].

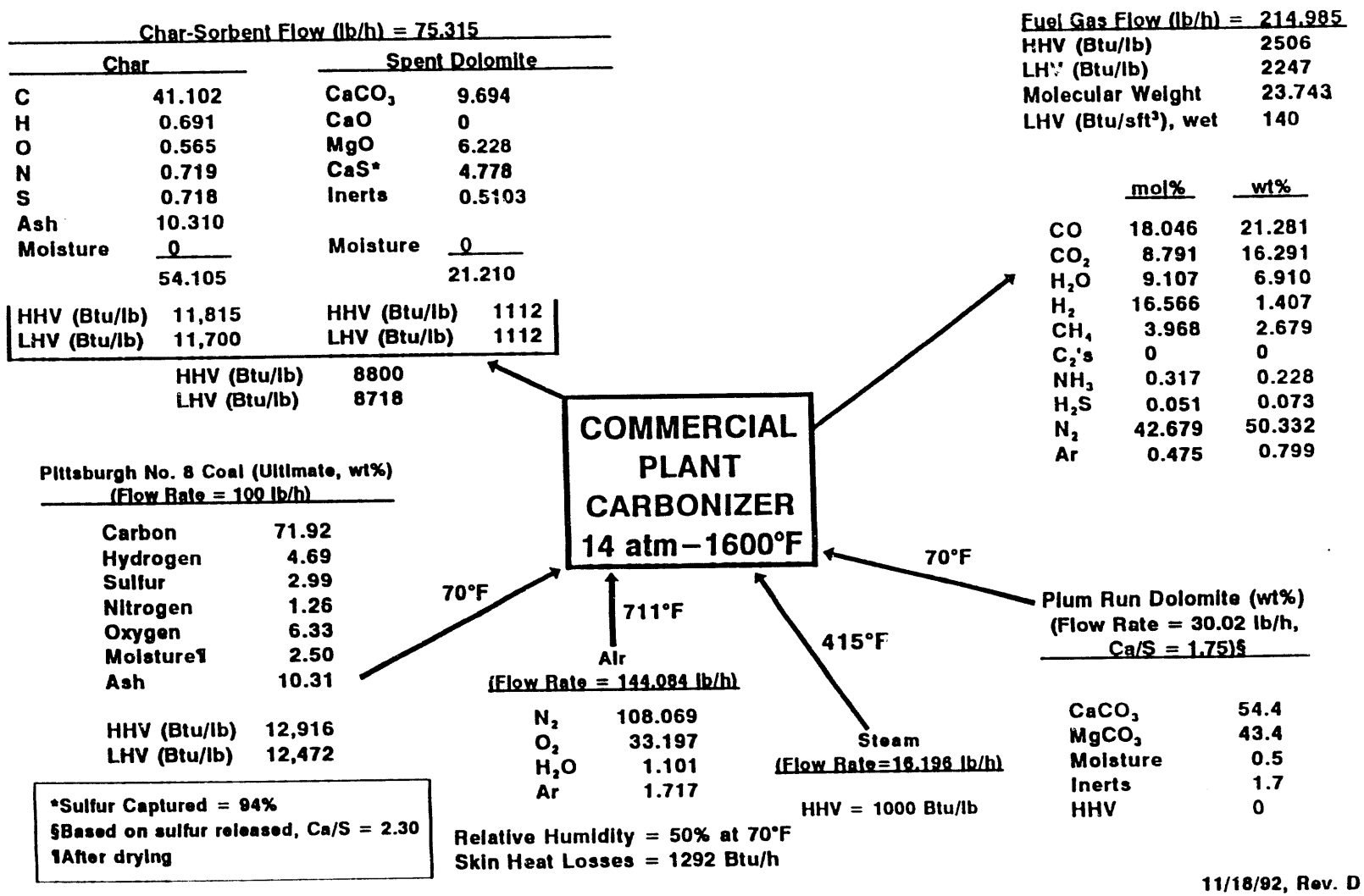

Figure 5 Commercial Plant 871°C (1600°F) Carbonizer Performance (Phase 2 Update)

The 871°C (1600°F) operating temperatures selected for the carbonizer and the CPFBC were based in part on the expectation that they would be low enough to limit the fuel gas and flue gas alkali vapor content to levels that could be tolerated by the gas turbine. Fuel gas alkali levels measured with the pilot plant carbonizer operating at 871°C (1600°F) suggest the need for an alkali getter such as emathlite, unless the gas is cooled significantly.

Although CPFBC and topping combustor testing have not yet been completed, we believe our Phase 1 predicted performance for these items is still reasonable. Using the "old" component data together with the updated carbonizer performance shown in Figure 5, Westinghouse PGBU has determined that the plant efficiency will now be optimized at a 1329°C (2425°F) topping combustor temperature. Allowing for about a 56°C (100°F) temperature drop to the inlet of the first rotating blades, the gas turbine will operate at the current temperature limit of 1260°C (2300°F). Gilbert/Commonwealth has prepared the detailed heat and material balance shown in Figure 6. Although this figure depicts only one carbonizer/CPFBC/gas turbine module, two are required (as in Phase 1); the flow rates shown are the total for the plant.

Based on the updated carbonizer performance and recently published Westinghouse 501F gas turbine data, the previously predicted 44.9-percent plant efficiency will rise to 46.2 percent. As in Phase 1, this analysis is based on the higher heating value of the coal (Pittsburgh No. 8) and the use of the referenced conventional steam cycle. A conventional 24.8 MPa gage/538°C/538°C/8.5 kPa Hg (3600-psig/1000°F/1000°F/2.5 in. Hg) supercritical-pressure steam cycle or even higher steam pressures and temperatures will further increase the efficiency of the plant. Incorporation of alkali getters in both the carbonizer and CPFBC gas paths, as shown in Figure 5, imposes pressure losses that reduce the plant efficiency. If the alkali getters were eliminated, the plant efficiency shown in Figure 5 would rise to 46.4 percent.

From a sulfur-release standpoint, the plant operates with a calcium-to-sulfur molar feed ratio of 1.75, and the dolomite is expected to capture 94 percent of the coal sulfur. Sulfur dioxide emissions, expected to be 0.93 kg (2.04 lb)/MWe (net), can be reduced by increasing the sorbent feed rate. At a calcium-to-sulfur feed ratio of 2.0, we anticipate a 97-percent sulfur-capture efficiency. Because CPFBC and topping combustor testing has not yet been completed, we are not ready to update the Phase 1 NO_x emissions estimate of 0.129 kg/GJ (0.3 lb/10^6 Btu) or 1.001 kg/MWe net (2.21 lb/MWe net). The 1329°C (2425°F) topping combustor temperature is expected to minimize N_2O emissions, and a properly performing ceramic barrier filter will limit particulate emissions to well under 0.013 kg/GJ (0.03 lb/10^6 Btu).

With CPFBC and topping combustor testing still under way, our updated plant estimates are preliminary. Once testing is completed, performance will be reestimated, and a new economic analysis will be prepared. A comparison will be made with a state-of-the-art PC-fired plant with a scrubber. Based on our preliminary Phase 2 data, however, we expect second-generation PFBC combustion plants will be even more attractive than predicted in Phase 1.

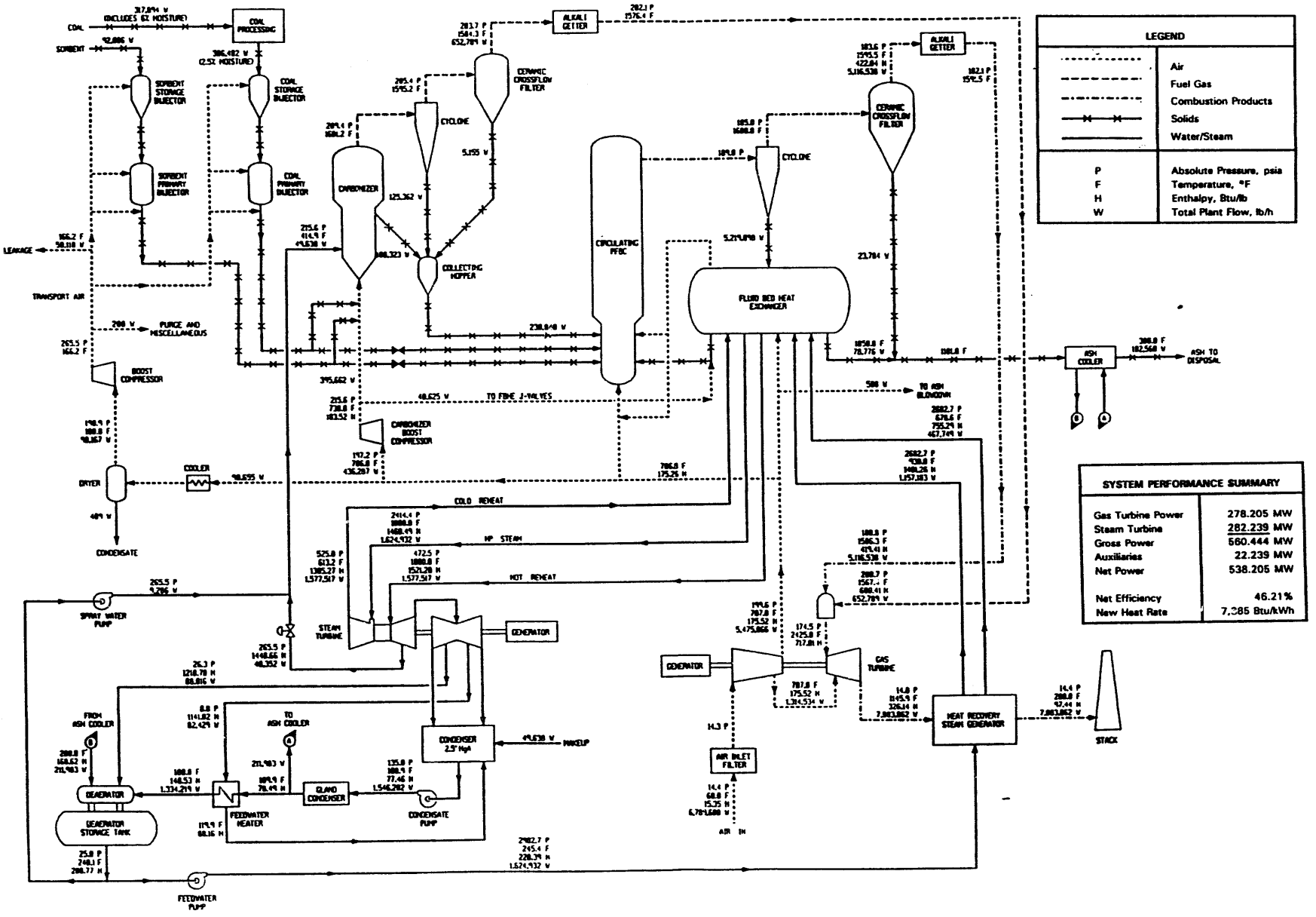

Figure 6 871°C (1600°F) Carbonizer Commercial Plant Heat and Material Balance (Preliminary Phase 2 Update With Alkali Getters)

The second-generation PFB process is one of several advanced technologies (Integrated Gasification Combined Cycles, Direct Coal-Fired Gas Turbines, Fuel Cells, etc.) being developed for electric power generation. To hasten their development, the DOE, EPRI, and industry are funding the construction and operation of the Power System Development Facility (PSDF) at the Wilsonville, Alabama, Station of Southern Company Services. At the PSDF, representative modules of each of these technologies will be integrated with advanced particulate control devices. Each module will be tested to ascertain performance and integration characteristics while investigating scaleup and reliability questions. The first module to be tested will be a second-generation PFB. As described in a paper by McClung, et al.[11], it will have a nominal 7-MWe equivalent capacity and incorporate a Foster Wheeler carbonizer, CPFBC, and FBHE; 1600°F candle-type particulate control devices supplied by Industrial Filter & Pump Manufacturing Company (Carbonizer gas) and Westinghouse STC (CPFBC gas); a Westinghouse PGBU MASB topping combustor; and an Allison Model 501 gas turbine. Since the gas turbine has a 1081°C (1977°F) temperature limit, the 1288°C (2350°F) MASB exhaust gas will be cooled by air dilution before it enters the turbine. The module, being designed by Foster Wheeler, is scheduled for start-up in 1995.

In a Clean Coal Technology V Program announcement, the DOE awarded a second-generation PFB demonstration plant to Air Products and Chemicals, Inc. The plant will be located at Air Product's chemical manufacturing facility in Calvert City, Kentucky[12]. At full load the cogeneration demonstration plant will generate 70 MWe (gross) of electricity while providing 37.8 kg/s (300,000 lb/h) of 1.31 MPa (190 psia)/216°C (420°F) steam. The gas turbine will generate 38 MWe, and an extraction/condensing steam turbine will generate 32 MWe. If all the steam were expanded through the steam turbine, the plant would generate about 95 MWe (gross). The plant will incorporate a Foster Wheeler carbonizer, CPFBC, and FBHE, a Westinghouse candle filter (Carbonizer gas), a Lurgi-Lentjes-Babcock Energietechnik GmbH candle filter (CPFBC gas), and a Westinghouse MASB and gas turbine. Foster Wheeler is designing the plant; design is expected to begin in early 1994 and lead to a 1998 start-up.

References

1. A. Robertson, et al., "Second-Generation PFB Combustion Plant Performance and Economics," 1988 Seminar on Fluidized-Bed Combustion Technology for Utility Applications, Palo Alto, CA, 1988.

2. *Second-Generation Fluidized Bed Combustion Plant: Research and Development Needs.* Foster Wheeler Development Corporation, Livingston, NJ. Phase 1 Task 2 Report FWC/FWDC-TR-89/06 to the U.S. DOE under Contract DE-AC21-86MC21023, 1989.

3. *Second-Generation Pressurized Fluidized Bed Combustion Plant: Integrated R&D Program Plan.* Foster Wheeler Development Corporation, Livingston, NJ. Phase 1 Task 3 Report FWC/FWDC-TR- 89/08 to the U.S. DOE under Contract DE-AC21-86MC21023, 1989.

4. A. Robertson, et al., "Carbonizer, CPFBC and Topping Combustor Testing for Second-Generation PFB Combustion Plants," *Proceedings of the 1991 International Conference on Fluidized Bed Combustion,* Volume 1, E. J. Anthony (ed.), ASME, New York, 1991.

5. A. Robertson, et al., "Second-Generation PFBC Systems Research and Development," *Proceedings of the Eleventh Annual Gasification and Gas Stream Cleanup Systems Contractors Review Meeting*, Volume 1, DOE/METC-91/6123, 1991.

6. W. Domeracki, et al., "Second-Generation PFBC Systems Research and Development," *Proceedings of the Ninth Annual Coal-Fueled Heat Engines, Advanced Pressurized Fluidized Bed Combustion, and Gas Stream Cleanup Systems Contractors Review Meeting*, DOE/METC 93/6129, 1992.

7. R. Newby, et al., "Second-Generation PFBC Systems Research and Development," *Proceedings of the Ninth Annual Coal-Fueled Heat Engines, Advanced Pressurized Fluidized Bed Combustion, and Gas Stream Cleanup Systems Contractors Review Meeting*, DOE/METC 93/6129, 1992.

8. A. Robertson, et al., "Second-Generation PFBC Systems Research and Development," *Proceedings of the Twelfth Annual Gasification and Gas Stream Cleanup Systems Contractors Review Meeting*, Volume 1, DOE/METC 92/6128, 1992.

9. A. Robertson, et al., "Initial Second-Generation PFB Carbonizer Pilot Plant Test Results," *Proceedings of the Ninth Annual International Pittsburgh Coal Conference*, University of Pittsburgh, 1992.

10. J. Van Hook, et al., "Carbon Conversions Measured in a Second-Generation PFB Pilot Plant Carbonizer," *Proceedings of the 12th International Conference on Fluidized Bed Combustion*, Volume 2, L. N. Rubow (ed.), ASME, New York, 1993.

11. J. D. McClung, et al., "Design and Operating Philosophy for an Advanced PFBC Facility at Wilsonville," *Proceedings of the 1993 International Conference on Fluidized Bed Combustion*, San Diego, 1993.

12. Dr. Shoou-I Wang, et al., "Calvert City Advanced Energy Project," *Proceedings of Power-Gen Asia '93*, Singapore, September 1993.

DATE FILMED

1/31/94

END