DOE/NV/26383–109

A Historical Evaluation of the U12t Tunnel, Nevada Test Site, Nye County, Nevada

Prepared by

Harold Drollinger, Robert C. Jones, and Thomas F. Bullard, Desert Research Institute
Laurence J. Ashbaugh, Southern Nevada Courier Service
and
Wayne R. Griffin, Stoller-Navarro Joint Venture

Cultural Resources Technical Report No. 105
Division of Earth and Ecosystem Sciences
Desert Research Institute
Las Vegas, Nevada

February 2009

This report was prepared as an account of work sponsored by an agency of the United States Government. Neither the United States Government nor any agency thereof, nor any of their employees, nor any of their contractors, subcontractors or their employees, makes any warranty, express or implied, or assumes any legal liability or responsibility for the accuracy, completeness, or any third party's use or the results of such use of any information, apparatus, product, or process disclosed, or represents that its use would not infringe privately owned rights. Reference herein to any specific commercial product, process, or service by trade name, trademark, manufacturer, or otherwise, does not necessarily constitute or imply its endorsement, recommendation, or favoring by the United States Government or any agency thereof or its contractors or subcontractors. The views and opinions of authors expressed herein do not necessarily state or reflect those of the United States Government or any agency thereof.

Available for sale to the public from:

U.S. Department of Commerce
National Technical Information Service
5285 Port Royal Road
Springfield, VA 22161
Phone: 800.553.6847
Fax: 703.605.6900
Email: orders@ntis.gov
Online ordering: http://www.ntis.gov/ordering.htm

Available electronically at http://www.osti.gov/bridge

Available for a processing fee to the U.S. Department of Energy and its contractors, in paper, from:

U.S. Department of Energy
Office of Scientific and Technical Information
P.O. Box 62
Oak Ridge, TN 37831-0062
Phone: 865.576.8401
Fax: 865.576.5728
Email: reports@adonis.osti.gov

DOE/NV/26383–109

A Historical Evaluation of the U12t Tunnel, Nevada Test Site, Nye County, Nevada

Prepared by

Harold Drollinger, Robert C. Jones, and Thomas F. Bullard, Desert Research Institute
Laurence J. Ashbaugh, Southern Nevada Courier Service
and
Wayne R. Griffin, Stoller-Navarro Joint Venture

Prepared for

U.S. Department of Energy
National Nuclear Security Administration
Nevada Site Office, Las Vegas, Nevada
and
U.S. Department of Defense
Defense Threat Reduction Agency
Nevada Test Site Office, Mercury, Nevada

Colleen M. Beck, Project Director
Division of Earth and Ecosystem Sciences
Desert Research Institute, Las Vegas, Nevada

Cultural Resources Technical Report No. 105
Division of Earth and Ecosystem Sciences
Desert Research Institute
Las Vegas, Nevada

February 2009

The work upon which this report is based was supported by the U.S. Department of Energy, National Nuclear Security Administration Nevada Site Office under Contract #DE-AC52-06NA26383.

ABSTRACT

This report presents a historical evaluation of the U12t Tunnel on the Nevada Test Site in southern Nevada. The work was conducted by the Desert Research Institute at the request of the U.S. Department of Energy, National Nuclear Security Administration Nevada Site Office and the U.S. Department of Defense, Defense Threat Reduction Agency (DTRA). The U12t Tunnel is one of a series of tunnels used for underground nuclear weapons effects tests on the east side of Rainier and Aqueduct Mesas. Six nuclear weapons effects tests, Mint Leaf, Diamond Sculls, Husky Pup, Midas Myth/Milagro, Mighty Oak, and Mission Ghost, and one high explosive test, SPLAT, were conducted within the U12t Tunnel from 1970 to 1987. All six of the nuclear weapons effects tests and the high explosive test were sponsored by DTRA. Two conventional weapons experiments, Dipole Knight and Divine Eagle, were conducted in the tunnel portal area in 1997 and 1998. These experiments were sponsored by the Defense Special Weapons Agency.

The U12t Tunnel complex is composed of the Portal and Mesa Areas and includes an underground tunnel with a main access drift and nine primary drifts, a substantial tailings pile fronting the tunnel portal, a series of discharge ponds downslope of the tailings pile, and two instrumentation trailer parks and 16 drill holes on top of Aqueduct Mesa. A total of 89 cultural features were recorded: 54 at the portal and 35 on the mesa. In the Portal Area, cultural features are mostly concrete pads and building foundations; other features include the portal, rail lines, the camel back, ventilation and cooling system components, communication equipment, and electrical equipment. On the mesa are drill holes, a few concrete pads, a loading ramp, and electrical equipment.

The principal modifications to the landscape are historic and associated with the development and use of the U12t Tunnel complex. In the Portal Area, these primarily include road building, mine tailings as construction fill, disposal of mine tailings on slopes during tunnel development, and construction of retention ponds. On the mesa, primary landscape modifications include road construction, trailer park pads, drill hole pads, electrical transmission lines and generating stations, and local quarry and bedrock excavation for building the pads and roads.

The U12t Tunnel complex is eligible to the National Register of Historic Places under criteria a and c, consideration g of 36 CFR Part 60.4 and is recommended to be maintained in place as a historic landscape. Scientific research conducted at the tunnel has made significant contributions to the broad patterns of our history, particularly in regard to the Cold War era that was characterized by competing social, economic, and political ideologies between the former Soviet Union and the United States. The tunnel also possesses a distinctive type and method of construction and engineering for conducting nuclear weapons effects tests underground.

ACKNOWLEDGMENTS

This research was conducted for the U.S. Department of Energy, National Nuclear Security Administration Nevada Site Office (NNSA/NSO) under the direction of Linda Cohn, NNSA/NSO Cultural Resources Manager; and for the U.S. Department of Defense, Defense Threat Reduction Agency (DTRA), under the direction of Tiffany Lantow, DTRA Nevada Operations Office Environmental Program Manager. Colleen M. Beck, Desert Research Institute, was project director and the field work was conducted under the supervision of Robert C. Jones, Desert Research Institute. Thomas F. Bullard, Desert Research Institute, conducted the geomorphological study. Other members of the field crew were Harold Drollinger, Barbara Holz, and Hal Rager, Desert Research Institute.

The Desert Research Institute extends special thanks to Laurence Ashbaugh and Wayne Griffin. Laurence Ashbaugh, former manager of the DTRA Nevada Operations Office, shared his extensive knowledge of the history surrounding the DTRA Underground Nuclear Weapons Effects Test (UNWET) program. Wayne Griffin, DTRA Project Manager for Stoller-Navarro Joint Venture, was instrumental in providing access to the U12t Tunnel and for information based on his UNWET knowledge and experience.

We would like to thank Bill Flangas for accompanying us to the Local Records Center, Las Vegas to look at historic documents related to the tunnel. Byron Ristvet, DTRA, also deserves thanks for his help in obtaining documents and photographs at the Defense Threat Reduction Information Analysis Center (DTRIAC), Kirtland Air Force Base, Albuquerque, New Mexico. At DTRIAC, Connie Saulus and her staff were helpful and efficient in providing access to scientific documents and photographs. Martha DeMarre, National Security Technologies, and her staff were ever helpful in providing documents and photographs on file at the Nuclear Testing Archive, Las Vegas. So it was with Loretta Bush and Robert Wilson at the NNSA/NSO Technical Library, North Las Vegas where key scientific reports on various historic Nevada Test Site activities are on file. Troy Leonard helped to provide engineering drawings on file at the Archives and Records Center, Mercury.

Special thanks are also due to a number of unique persons willing to share their knowledge and experiences at the tunnels in recorded interviews. One video interview was conducted on location at the U12t Tunnel site with Byron Ristvet, Laurence Ashbaugh, and Wayne Griffin. A second video interview was conducted at the Desert Research Institute with Bill Flangas, former Reynolds Electrical & Engineering Company (REECo) Operations Manager and Bill Harvey, a former REECo U12t Tunnel Mechanical Superintendent. An audio interview was conducted at the Desert Research Institute with Margaret Townsend, geologist with National Security Technologies. Keith Kolb, videographer for National Security Technologies, provided his skills and experience to make the video interviews possible.

TABLE OF CONTENTS

ABSTRACT. i

ACKNOWLEDGMENTS. ii

TABLE OF CONTENTS. iii

LIST OF TABLES. iv

LIST OF FIGURES. iv

INTRODUCTION. 1

RESEARCH DESIGN AND METHODS. 3

HISTORIC CONTEXT. 6
- Department of Energy 6
- Department of Defense 7
- Nevada Test Site 9
- Atmospheric Nuclear Testing 10
- Underground Nuclear Testing 11

ENVIRONMENTAL SETTING OF THE U12t TUNNEL. 34

DESCRIPTION OF THE U12t TUNNEL. 38
- Geomorphology of the Portal Area. 57
- U12t Tunnel Cultural Features. 87
- U12t Tunnel Tests. 211

SUMMARY AND RECOMMENDATIONS. 257
- National Register Eligibility. 259
- Management Recommendations 260

REFERENCES. 261

APPENDIX A: Bedrock Descriptions for Older Geologic Units in Rainier and Aqueduct Mesas. 272

APPENDIX B: Contractors and Other Government Agencies. 276

LIST OF TABLES

Table 1: U12t Tunnel Aqueduct Mesa Drill Holes, UTM Coordinates, and Depth. 56

Table 2: Legend for Surficial Geologic Map of the Portal Area. 59

Table 3: Location of U12t Tunnel Divisions. 95

Table 4: Location of U12t Tunnel Features. 99

Table 5: Nuclear Weapons Effects Tests in the U12t Tunnel. 214

LIST OF FIGURES

Figure 1: Location of the U12t Tunnel on the Nevada Test Site. 2

Figure 2: U12t Tunnel complex. 5

Figure 3: Schematic of a horizontal line-of-sight pipe for tunnels. 14

Figure 4: Typical layout of an underground nuclear weapons effects test. 15

Figure 5: Sketch of a typical conical line-of-sight pipe section and supports. 16

Figure 6: Sketch of the test chamber for the Diamond Sculls test. 17

Figure 7: Sketch of a High Explosive Machine or Fast Acting Closure. 19

Figure 8: Sketch of a Sandia Auxiliary Closure.. 20

Figure 9: Sketch of a DNA Fast Door or Auxiliary Closure. 21

Figure 10: Sketch of a Tunnel and Pipe Seal. 22

Figure 11: Sketch of a Muffler for a line-of-sight pipe. 23

Figure 12: Reentry team, U12t Tunnel, 1970. 31

Figure 13: Map of Area 12 tunnel complexes and roads, 1992. 35

Figure 14: Drift plan of U12t Tunnel, 1990.. 39

Figure 15: U12t Tunnel portal area, view north, 1972.. 41

Figure 16: U12t Tunnel portal area, view southeast, 1975. 42

Figure 17: Plan of the initial U12t Tunnel portal area, 1968. 43

Figure 18: Plan of the U12t Tunnel portal area, 1972. 44

Figure 19: Plan of the U12t Tunnel portal area and water distribution system, 1972. 45

Figure 20: Plan of the U12t Tunnel portal area, 1981. 46

Figure 21: Plan of the U12t Tunnel portal area, 1984. 47

Figure 22: Plan of the retention ponds downslope of the portal and muck pile, 1991. 48

Figure 23: Aerial view of the U12t Tunnel mesa trailer park on Aqueduct Mesa, 1972.. . . 49

Figure 24: View northwest of the U12t Tunnel mesa trailer park, 1974. 50

Figure 25: Plan of the U12t Tunnel mesa trailer park for the Mint Leaf test, 1970.. 51

Figure 26: Plan of the U12t Tunnel mesa trailer park for the Diamond Sculls test, 1972.. . 52

Figure 27: Plan of the U12t Tunnel mesa trailer park for the Husky Pup test, 1974. 53

Figure 28: Map of Area 12 showing locations of drill holes, roads, trailer parks, and portal areas during the Midas Myth/Milagro test, 1983.. 54

Figure 29: Plan of the Milagro cable hole drill pad, 1982. 55

Figure 30: Surficial geologic map for the U12t Tunnel complex. 58

Figure 31: View west of cut slopes in thick colluvium and bedrock in the portal area. 61

Figure 32: Panorama view to the south of the portal area. 62

Figure 33: View along the Aqueduct Mesa access road south of the portal area. 63

Figure 34: View west of artificial fill blocking a tributary to “The Aqueduct” drainage on Aqueduct Mesa. 65

Figure 35: View southeast from the top of Aqueduct Mesa showing the spatial arrangement of the six retention ponds. 66

Figure 36: View east from the edge of Aqueduct Mesa toward the portal area.. 67

Figure 37: Example of bedrock cut slopes in the portal area.. 68

Figure 38: Example of Ars, road side-cast.. 69

Figure 39: Example of tailing slopes at the eastern edge of the staging and dump area. . . . 71

Figure 40: View south at the eastern edge of the tailings dump area.. 72

Figure 41: Tailings dump station and rail line, 2006. 73

Figure 42: General view of tailings dump station and terraced tailings pile, 2006. 74

Figure 43: View northeast of gullied tailings on the east end of the tailings pile area at U12t Tunnel. 75

Figure 44: View southwest of large bladed areas along the access road on top of Aqueduct Mesa. 76

Figure 45: View to the southeast showing the access road on Aqueduct Mesa where it crosses a tributary drainage.. 77

Figure 46: Example of fluvial terrace and fluvial gravel inset into beveled bedrock surface near the U12t Tunnel portal.. 78

Figure 47: View of colluvial slopes of Survey Butte.. 80

Figure 48: View of the Tongue Wash tributary alluvial valley and terrace remnants immediately west of the U12t Tunnel portal. 81

Figure 49: View northeast of the U12t Tunnel portal area and flanks of Aqueduct Mesa. . . 82

Figure 50: Large bladed area of the U12t Tunnel main mesa trailer park on top of Aqueduct Mesa. 83

Figure 51: Example of a broad bladed area, removing thin mantle of colluvium overlying bedrock, for the U12t Tunnel mesa trailer park on top of Aqueduct Mesa. 84

Figure 52: Fissures in the Rainier Mesa Member of the Timber Mountain Tuff on the top of Aqueduct Mesa. 86

Figure 53: Location of the U12t Tunnel Portal; subsurface test locations;. 88

Figure 54: Location of the U12t Tunnel features on Portal, Ventilation, and Water Supply terraces and Pond Area. 89

Figure 55: Location of features at the U12t Tunnel Mesa Trailer Park on Aqueduct Mesa. . 91

Figure 56: Location of features at the Midas Myth/Milagro Trailer Park on Aqueduct Mesa. 92

Figure 57: Feature 1, U12t Tunnel Portal, view northeast. 94

Figure 58: Plan map of Feature 2, U12t Tunnel. 97

Figure 59: Photograph of Feature 2, U12t Tunnel, view southwest. 98

Figure 60: Photograph of Feature 2, U12t Tunnel, view northeast. 98

Figure 61: Plan map and photograph of Feature 3, U12t Tunnel, view southwest. 103

Figure 62: Plan map and photograph of Feature 4, U12t Tunnel, view northeast. 105

Figure 63: Plan map and photograph of Feature 5, U12t Tunnel, view west. 106

Figure 64: Plan map and photograph of Feature 6, U12t Tunnel, view southeast. 108

Figure 65: Plan map and photograph of Feature 7, U12t Tunnel, view northeast 109

Figure 66: Plan map of Features 8 and 9, U12t Tunnel. 111

Figure 67: Photograph of Feature 8, U12t Tunnel, view north. 112

Figure 68: Photograph of Feature 9, U12t Tunnel, view northeast. 112

Figure 69: Plan map and photograph of Feature 10, U12t Tunnel, view southwest. 113

Figure 70: Plan map and photograph of Feature 11, U12t Tunnel, view northwest. 114

Figure 71: Plan map and photograph of Feature 12, U12t Tunnel, view southwest. 116

Figure 72: Plan map and photograph of Feature 13, U12t Tunnel, view southwest. 117

Figure 73: Plan map and photograph of Feature 14, U12t Tunnel, view southwest. 118

Figure 74: Plan map and photograph of Feature 15, U12t Tunnel, view southwest. 120

Figure 75: Plan map and photograph of Feature 16, U12t Tunnel, view northeast. 121

Figure 76: Plan map and photograph of Feature 17, U12t Tunnel, view southwest. 122

Figure 77: Plan map and photograph of Feature 18, U12t Tunnel, view west. 123

Figure 78: Plan map and photograph of Feature 19, U12t Tunnel, view northwest. 124

Figure 79: Plan map and photograph of Feature 20, U12t Tunnel, view northwest. 126

Figure 80: Plan map and photograph of Feature 21, U12t Tunnel, view northwest. 127

Figure 81: Plan map and photograph of Feature 22, U12t Tunnel, view northeast. 128

Figure 82: Plan map and photograph of Feature 23, U12t Tunnel, view southwest. 130

Figure 83: Photograph of Feature 24, anemometer U12t Tunnel, view northwest. 131

Figure 84: Plan map and photograph of Feature 25, U12t Tunnel, view southeast. 133

Figure 85: Plan map and photograph of Feature 26, U12t Tunnel, view southeast. 134

Figure 86: Plan map and photograph of Feature 27, U12t Tunnel, view northwest. 135

Figure 87: Plan map and photograph of Feature 28, U12t Tunnel, view northwest. 137

Figure 88: Plan map and photograph of Feature 29, U12t Tunnel, view southwest. 138

Figure 89: Plan map and photograph of Feature 30, U12t Tunnel, view southeast. 139

Figure 90: Plan map and photograph of Feature 31, U12t Tunnel, view southwest. 141

Figure 91: Plan map and photograph of Feature 32, U12t Tunnel, view northeast. 142

Figure 92: Plan map and photograph of Feature 33, U12t Tunnel, view northwest. 143

Figure 93: Plan map and photograph of Feature 34, U12t Tunnel, view northwest. 145

Figure 94: Plan map and photograph of Feature 35, U12t Tunnel, view southwest. 146

Figure 95: Plan map and photograph of Feature 36, U12t Tunnel, view southeast. 147

Figure 96: Plan map and photograph of Feature 37, U12t Tunnel, view northwest. 148

Figure 97: Plan map and photograph of Feature 38, U12t Tunnel, view northeast. 150

Figure 98: Plan map and photograph of Feature 39, U12t Tunnel, view northwest. 151

Figure 99: Plan map and photograph of Feature 40, U12t Tunnel, view northwest. 152

Figure 100: Plan map and photograph of Feature 41, U12t Tunnel, view north. 154

Figure 101: Plan map and photograph of Feature 42, U12t Tunnel, view north. 155

Figure 102: Plan map and photograph of Feature 43, U12t Tunnel, view northwest. 157

Figure 103: Plan map and photograph of Feature44, U12t Tunnel, view north. 158

Figure 104: Plan map and photograph of Feature 45, U12t Tunnel, view northwest. 159

Figure 105: Plan map and photograph of Feature 46, U12t Tunnel, view northwest. 161

Figure 106: Plan map and photograph of Feature 47, U12t Tunnel, view northwest. 162

Figure 107: Plan map and photograph of Feature 48, U12t Tunnel, view north. 163

Figure 108: Plan map and photograph of Feature 49, U12t Tunnel, view northeast. 164

Figure 109: Photograph of Feature 50, U12t Tunnel, view southeast 166

Figure 110: Plan map and photograph of Feature 51, U12t Tunnel, view southwest. 167

Figure 111: Plan map and photograph of Feature 52, U12t Tunnel, view west. 169

Figure 112: Plan map and photograph of Feature 53, U12t Tunnel, view south. 170

Figure 113: Plan map and photograph of Feature 54, U12t Tunnel, view east. 171

Figure 114: Plan map and photograph of Feature 55, U12t Tunnel, view east. 172

Figure 115: Plan map and photograph of Feature 56, U12t Tunnel, view southeast. 174

Figure 116: Plan map and photograph of Feature 57, U12t Tunnel, view northwest. 175

Figure 117: Plan map and photograph of Feature 58, U12t Tunnel, view southwest. 176

Figure 118: Plan map and photograph of Feature 59, U12t Tunnel, view north. 177

Figure 119: Plan map and photograph of Feature 60, U12t Tunnel, view northeast. 178

Figure 120: Plan map and photograph of Feature 61, U12t Tunnel, view northwest. 179

Figure 121: Plan map and photograph of Feature 62, U12t Tunnel, view northeast. 181

Figure 122: Plan map and photograph of Feature 63, U12t Tunnel, view northwest. 182

Figure 123: Plan map and photograph of Feature 64, U12t Tunnel, view south. 183

Figure 124: Plan map and photograph of Feature 65, U12t Tunnel, view west. 184

Figure 125: Plan map and photograph of Feature 66, U12t Tunnel, view west. 185

Figure 126: Plan map and photograph of Features 67 and 68 and photograph of Feature 67, U12t Tunnel, view northwest. 187

Figure 127: Photograph of Feature 68, U12t Tunnel, view north. 188

Figure 128: Plan map and photograph of Feature 69, U12t Tunnel, view east. 189

Figure 129: Plan map and photograph of Feature 70, U12t Tunnel, view south. 190

Figure 130: Plan map and photograph of Feature 71, concrete foundation and cable holes U12tCH#1 and U12tCH#2, U12t Tunnel, view northeast. 191

Figure 131: Photograph of Feature 72, UE12#1, U12t Tunnel, view northwest. 192

Figure 132: Plan map and photograph of Feature 73, concrete pad covering post-shot drill holes U12t.04PS#1A and U12t.04PS#1AA, U12t Tunnel, view northwest 194

Figure 133: Plan map and photograph of Feature 74, U12t Tunnel, view west. 195

Figure 134: Plan map and photograph of Feature 75, U12t Tunnel, view north. 196

Figure 135: Plan map and photograph of Feature 76, U12t Tunnel, view west. 197

Figure 136: Photograph of Feature 77, cratered area around U12t.04CH#1, U12t Tunnel, view southwest. 198

Figure 137: Plan map and photograph of Feature 78, U12t Tunnel, view southwest. 200

Figure 138: Plan map and photograph of Feature 79, U12t Tunnel, view south. 201

Figure 139: Photograph of Feature 80, U12t.04PS#1D, view northwest.. 202

Figure 140: Photograph of Feature 81, U12t.04PS#2D, view northwest.. 203

Figure 141: Photograph of Feature 82, UE12#3, view west. 205

Figure 142: Photograph of Feature 83, U12t.02PS#1A, view northwest.. 206

Figure 143: Photograph of Feature 84, UE12t#2, view northwest. 207

Figure 144: Photograph of Feature 85, UE12t#5, view northwest. 208

Figure 145: Photograph of Feature 86, UE12t#4, view west.. 209

Figure 146: Photograph of Feature 87, UE12t#6, view northeast. 210

Figure 147: Photograph of Feature 88, UE12t#7, view east. 212

Figure 148: Photograph of Feature 89, UE12t#8, view northwest. 213

Figure 149: Plan of the U12t.01 drift for the Mint Leaf nuclear weapons effects test. 215

Figure 150: Construction plan of the U12t.01 drift, 1969. 216

Figure 151: Plan of the U12t.02 drift for the Diamond Sculls test. 219

Figure 152: Construction plan of the U12t.02 drift for the Diamond Sculls test, 1972.. 220

Figure 153: U12t Tunnel Portal Area, with storage of the half sections of the line-of-sight pipe for the Diamond Sculls test, view southeast, 1970. 221

Figure 154: Half sections of the line-of-sight pipe for the Diamond Sculls test, U12t Tunnel Portal Area, view south, 1970. 222

Figure 155: Tunnel and Pipe Seal for the Diamond Sculls test, U12t Tunnel Portal Area, 1971. 223

Figure 156: Half section of the line-of-sight pipe being moved into the portal entrance, U12t Tunnel, 1970. 224

Figure 157: Assembly room, U12t.02 drift, 1971. 225

Figure 158: Construction of the line-of-sight pipe, U12t.02 drift, 1971. 226

Figure 159: Test Chamber No. 1 in Assembly Room, U12t.02 drift, 1972. 227

Figure 160: View of Test Chamber No. 1 and attached pipe stubs in the Assembly Room for the Diamond Sculls test. 228

Figure 161: Plan of the U12t.03 drift for the Husky Pup nuclear weapons effects test. 232

Figure 162: Construction plan of the U12t.03 drift, 1975. 233

Figure 163: A-box for the Husky Pup test being moved into U12t Tunnel, 1975. 234

Figure 164: Test Chamber No. 1 for the Husky Pup test in the U12t.03 drift, 1975. 235

Figure 165: Plan of the U12t.04 drift for the Midas Myth/Milagro test. 239

Figure 166: Plan of the U12t.03 drift and the U12t.04 drift, ca 1984. 240

Figure 167: Plan of the ballroom in U12t.04 drift, 1983. 241

Figure 168: Plan of the U12t.08 drift for the Mighty Oak test. 246

Figure 169: Construction plan of the U12t.08 drift for the Mighty Oak test, 1985. 247

Figure 170: Plan of the U12t.09 drift for the Mission Ghost test. 251

Figure 171: Plan of the U12t.09 drift for the Mission Ghost test, 1987. 252

Figure 172: Plan and profile of the U12t.09 drift, 1987. 253

INTRODUCTION

The U.S. Department of Energy (DOE), National Nuclear Security Administration Nevada Site Office (NNSA/NSO) requested the Desert Research Institute to conduct a historical evaluation of the U12t Tunnel in Area 12 of the Nevada Test Site (NTS), Nye County, Nevada (Figure 1). The intent of this historical evaluation is in reference to Section 110 of the National Historic Preservation Act of 1966, as amended, and involves the identification and evaluation of historic properties. The NTS is a Federal government facility administered by the NNSA/NSO and is not accessible to the general public. It is about 65 miles (105 km) northwest of Las Vegas by way of U.S. Highway 95 with the main entrance and the base camp of Mercury located toward its southeast corner.

The U12t Tunnel, at the north end of the NTS, was in operation from 1967 to 1988 for nuclear weapons effects tests by the U.S. Department of Defense (DoD), Defense Threat Reduction Agency (DTRA). The U12t Tunnel is eligible to the National Register of Historic Places under criteria a and c, consideration g of 36 CFR Part 60.4. It is eligible under criterion a because of its historic significance at the NTS and its role in national defense during the Cold War between the United States and the former Soviet Union. It is eligible under criterion c because of specialized engineering techniques and achievements in order to carry out nuclear weapons effects tests underground.

Because of the nature and significance of the property, the U12t Tunnel area is recommended to be maintained in place as a historic landscape. A historic landscape is one associated with a historic event or series of historic events, where the landscape has been planned, altered because of a desired function, and has a discernable pattern. The U12t Tunnel area is also recommended to be included in the NTS cultural resources monitoring program to be monitored on a regular basis.

The following sections of this report are the research design and methods for the work conducted for this historic evaluation; a historic context for nuclear testing at the NTS, with an emphasis on underground testing; environmental setting of the U12t Tunnel, including the location, geology, topography, and natural resources; a description of the U12t Tunnel complex including the geomorphology and cultural resources in the portal and mesa areas and summaries of the nuclear and high explosive tests conducted in the tunnel; and an overall summary, national register eligibility, and management recommendations for the U12t Tunnel. Appendix A provides a description of the geology for the stratigraphic units where the underground nuclear weapons effects tests were conducted in Rainier and Aqueduct Mesas. Appendix B provides a listing of contractors and other government agencies involved in the testing and operations at the NTS.

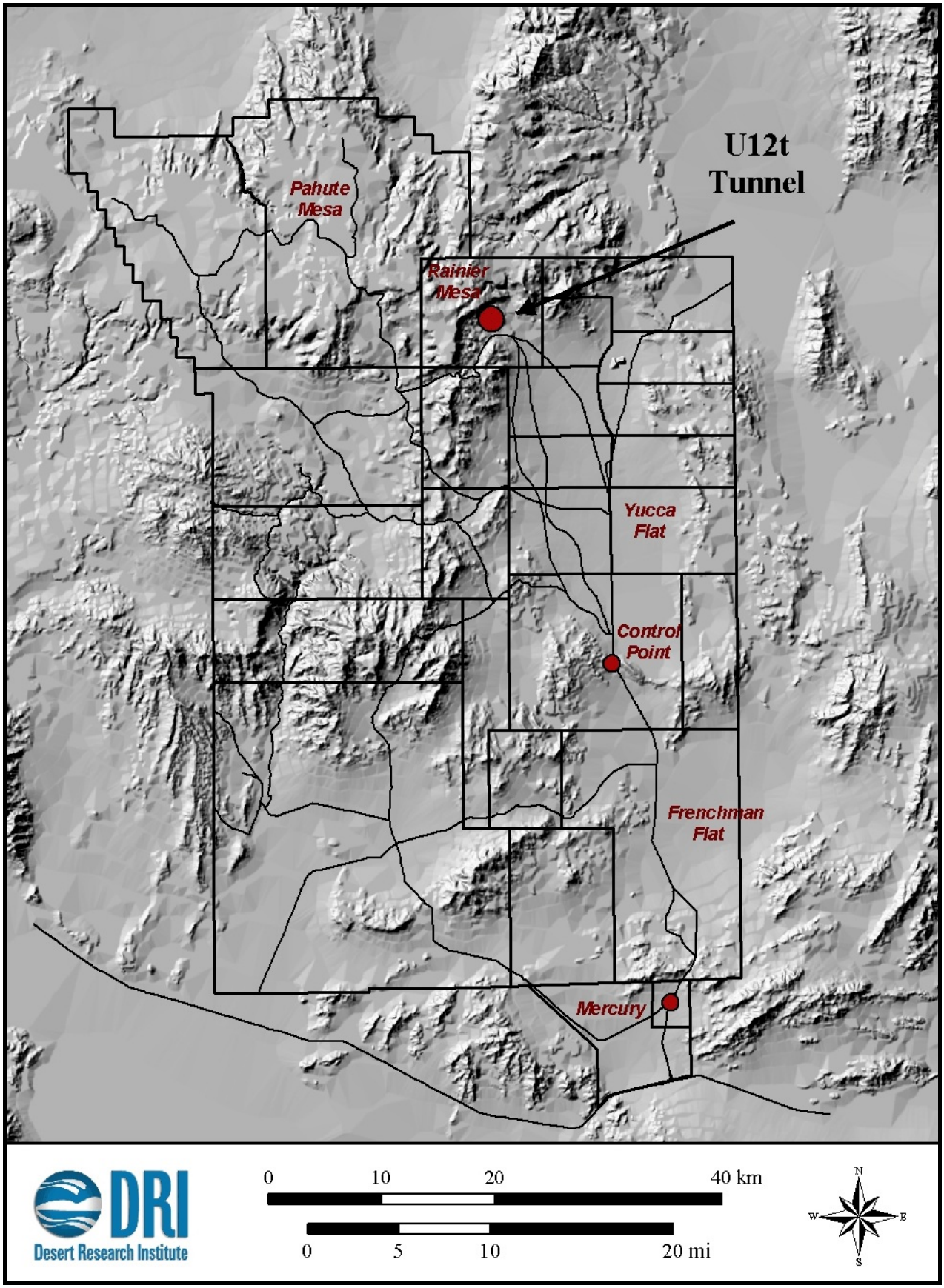

Figure 1. Location of the U12t Tunnel on the Nevada Test Site.

RESEARCH DESIGN AND METHODS

The research design for this historical evaluation of the U12t Tunnel consisted of background research, interviews, and field documentation of the tunnel complex. The first focus for this study was to obtain documents to describe the historic context of the U12t Tunnel in order to evaluate its historic significance and exceptional importance for eligibility to the National Register of Historic Places. The Desert Research Institute in Las Vegas maintains complete records of all cultural resources inventories, historic evaluations, mitigations, and archaeological site information for the NTS. Documents and historic photographs were also obtained from the NNSA/NSO Nuclear Testing Archive, Las Vegas; the NNSA/NSO Technical Library, North Las Vegas; the NNSA/NSO Remote Sensing Laboratory, Las Vegas; and the Defense Threat Reduction Information Analysis Center, Albuquerque, New Mexico. The Archives and Records Center, Mercury, Nevada maintains the collection of engineering drawings for the NTS. At least 4,200 engineering drawings related to the U12t Tunnel are on file. Many of the documents for the nuclear weapons effects tests at the U12t Tunnel are still classified and not publicly available; therefore, historic information for this evaluation is based solely on available unclassified documents. Photographs and engineering drawings in this report have been approved for public release.

The U12t Tunnel historical evaluation is the third study of a nuclear testing tunnel at the NTS. The other two are the U12b Tunnel (Jones et al. 2006) and the U12e Tunnel (Drollinger et al. 2007). Historic themes for this research are nuclear testing and national defense. Other studies of cultural resources on the NTS with similar historic themes are the Area 2 Equipment Support Yard (Johnson 1994), the Japanese Village (Johnson and Edwards 1996), Camp Desert Rock (Edwards 1997), the Apple-2 Historic District in Yucca Flat (Johnson and Edwards 2000), the Frenchman Flat Historic District (Johnson et al. 2000), the Yucca Lake Historic District (Jones et al. 2005), underground nuclear test locations in Frenchman Flat (Jones and Drollinger 2001), bunkers used in atmospheric nuclear tests (Edwards and Johnson 1995; Johnson 2002; Jones 2003, 2004), benches for viewing atmospheric nuclear tests (Jones 2005), buildings in the Area 6 Control Point area (Drollinger et al. 2003), the Super Kukla facility (Drollinger et al. 2000; Drollinger and Goldenberg 2004), and the Pluto Control Facility Historic District (Drollinger et al. 2005).

Cultural resources determined eligible to the National Register of Historic Places from the above studies include structures in the Frenchman Flat and Yucca Lake Historic Districts, houses in the Apple-2 Historic District, the Japanese Village, the atmospheric testing bunkers, the viewing benches, buildings in the Area 6 Control Point, the Super Kukla facility, the Pluto Control facility, and the U12b and U12e Tunnels. Sedan Crater, a Plowshare nuclear experiment conducted in 1962 on the NTS, is listed on the National Register of Historic Places. All of these historic properties date to the Cold War era and are representative of the various nuclear testing activities carried out at the NTS during this period.

A second major focus of this study was the physical setting and description of the U12t Tunnel complex and consisted of on-site visits, photographs, mapping and description of the geology and geomorphology, and mapping and measurements of extant cultural features. Components of the U12t

Tunnel historic landscape are shown in Figure 2. These include the Portal Area with 31.4 acres (12.7 hectares) and two Mesa Areas with 153.5 acres (62.1 hectares). Total area for the tunnel complex is 184.9 acres (74.8 hectares). Fieldwork for the U12t Tunnel complex consisted of 12 days from May to September, 2007 to map and describe extant cultural features and the geology and geomorphology. One day was spent at the portal area in November to conduct interviews about the history of the tunnel with Laurence Ashbaugh, Wayne Griffin, and Byron Ristvet (Ristvet et al. 2007). Other interviews were conducted at the Desert Research Institute with Bill Flangas, Bill Harvey, and Maggie Townsend (Flangas and Harvey 2007; Townsend 2007). Entry to the interior of the U12t Tunnel was not allowed due to safety. Moreover, a concrete plug is about 100 ft (30 m) from the portal entrance, effectively sealing the tunnel. Consequently, fieldwork carried out during this study was restricted to the exterior settings of the portal and mesa areas. Posted radiation contaminated areas downslope of the portal were not entered and included the ponds area and base of the talus deposit.

The purpose of the geomorphic study was to document the changes in the landscape as a result of site preparation and tunneling activities. This study, conducted in July 2007, was accomplished by making a reconnaissance-level map of the surficial and bedrock geology at the site. During field visits, the extent of tailings from mining operations, fill emplacements, cut slopes, material side-cast during road construction activities, and building pad preparations on the top of Aqueduct Mesa were mapped. No surface disturbing activities (e.g., digging) or detailed field descriptions of bedrock or soils were undertaken.

Boundaries of the historic landscape for the U12t Tunnel and the geomorphology study area were based on field recordings and from available documents. Fieldwork was conducted by archaeologists Robert Jones, Barbara Holz, Hal Rager, and Harold Drollinger, Desert Research Institute, Las Vegas and geomorphologist Thomas F. Bullard, Desert Research Institute, Reno. A total of 89 cultural features were recorded: 55 in the Portal Area and 35 in the Mesa Areas. Overall dimensions and digital, color, and black-and-white photographs were taken of each feature. The negatives of the photographs and electronic copies of the digital photographs are on file at the NNSA/NSO Curation Facility, Frank H. Rogers Building, Desert Research Institute, Las Vegas.

As standard practice in cultural resources studies, the Universal Transverse Mercator (UTM) Coordinate System, expressed in meter units, is used throughout this document for plotting geographic locations. The State Plane Coordinate System, employed historically by the NTS, uses feet as the standard unit of measure. Conversions between the two coordinate systems for a specific geographic location were performed with the *Corpscon* software program (U.S. Army Corps of Engineers 2004).

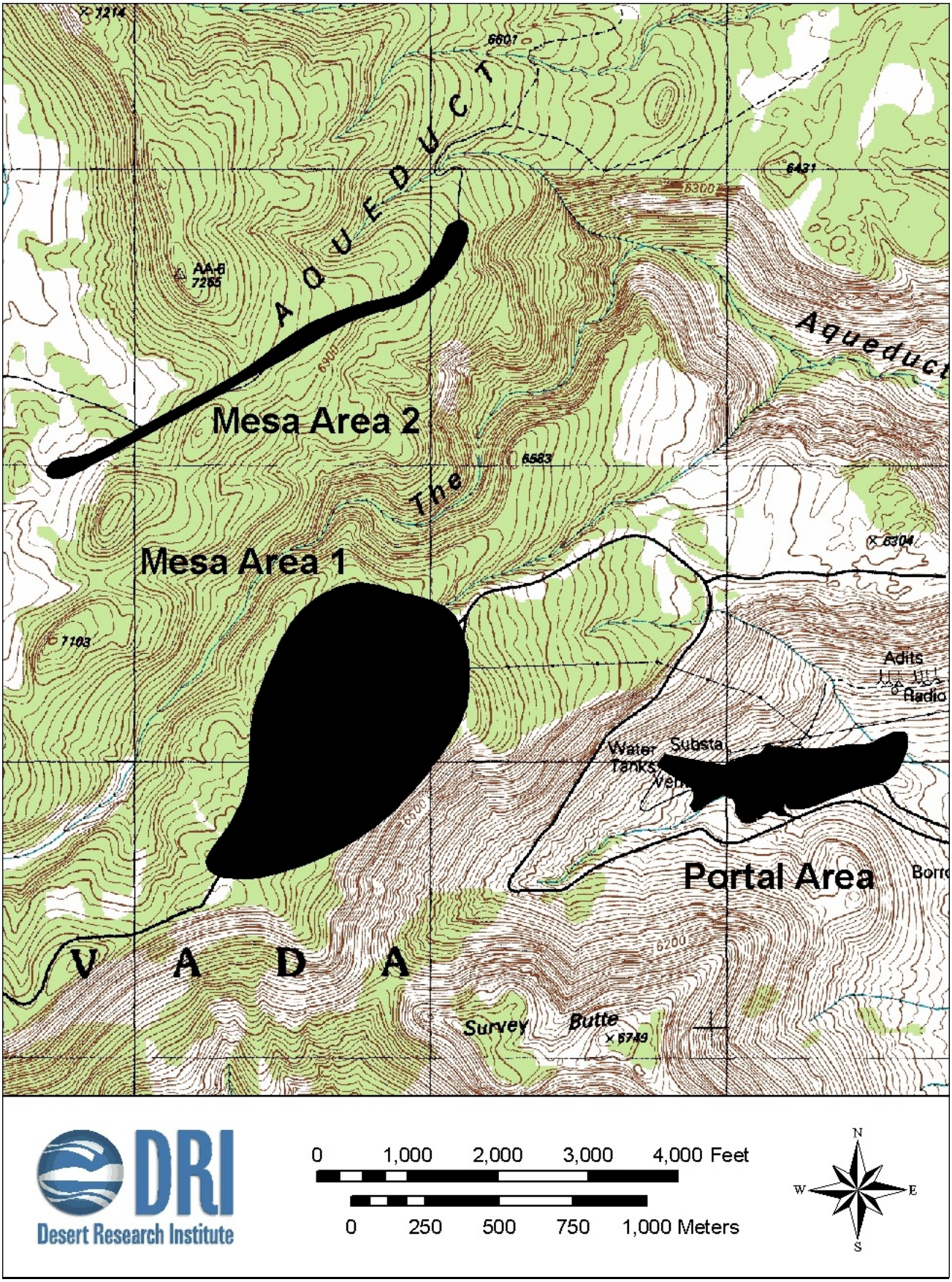

Figure 2. U12t Tunnel complex (USGS Rainier Mesa 7.5 min 1986).

HISTORIC CONTEXT

The historic context for the U12t Tunnel is local and national because of its role in the United States nuclear weapons testing program at the NTS during the Cold War with the former Soviet Union. A result of this confrontation was an ever-escalating arms race for nuclear weapon superiority (Anders 1978:4; Loeber 2002:80; Ogle 1985:20). This led to numerous nuclear detonations worldwide in the atmosphere, outer space, underwater, and underground. The major proponents in this struggle for the United States were the U.S. Department of Energy and the U.S. Department of Defense, with both having active roles at the NTS in the development and testing of nuclear weapons and their effects.

Department of Energy

Shortly after World War II, the Atomic Energy Commission (AEC), now the U.S. Department of Energy, was established when President Harry Truman signed the Atomic Energy Act of 1946. The purpose of the act was to address issues of government control of fissionable material, nuclear experiments for military applications, and regulations pertaining to the release of scientific and other related data. The function of the AEC was to maintain civilian government control of the research, development, and production of atomic weapons for the military (Anders 1978:2). Research of nuclear weapons was conducted at the Los Alamos Scientific Laboratory (LASL), now the Los Alamos National Laboratory (LANL), New Mexico, established in 1943 as part of the Manhattan Engineer District. Development and production of the weapons took place at Sandia Laboratory, now the Sandia National Laboratories, New Mexico, established in 1948; the Y-12 Plant in Oak Ridge, Tennessee; at Hanford, Washington; and the Rock Island Arsenal in Illinois (Anders 1978:3; Brady et al.1989:18-19; Stapp 1997). Following the first nuclear detonation by the former Soviet Union in 1949 (Anders 1978:4; Ogle 1985:20), increased efforts for research and production were implemented in the United States. A second nuclear weapons research laboratory was established in 1952 at Livermore, California, eventually becoming the Lawrence Livermore National Laboratory (Brady et al.1989:18). The Lawrence Livermore National Laboratory (LLNL) was initially the University of California Radiation Laboratory, a branch of the Berkeley Radiation Laboratory, and then in 1958 became the Lawrence Radiation Laboratory. In 1971, it separated from the Berkeley laboratory to become a national laboratory, and in 1982 it became LLNL (DOE 1997:203). Other facilities added to the nuclear weapons industry in the 1950s included manufacturing plants at Rocky Flats near Golden, Colorado; the Kansas City Plant in Missouri; the Burlington Army Ordnance Plant in Iowa; the Pinellas Plant in Largo, Florida; Mound Laboratory in Miamsburg, Ohio; and the Pantex Plant near Amarillo, Texas (Anders 1978:4; DOE 1997:27).

The United States and the former Soviet Union ceased nuclear testing in 1958 by self-imposed moratoriums at the urging of internal and external forces (Ogle 1985:30-31), but by 1961 both superpowers were once again conducting nuclear tests. Except for a few surface and near-surface tests, most of the tests after the moratoriums were placed underground, and after ratification of the Limited Test Ban Treaty among the United States, the former Soviet Union, and Great Britain in 1963, all nuclear tests were underground (Friesen 1995:6). According to the treaty, no tests could

be conducted in the atmosphere, outer space, or underwater. Furthermore, certain safeguards for the United States were established in order for the U.S. Senate to ratify the treaty (DTRA 2002:246). These safeguards were an intensive underground testing program, maintenance of the weapons laboratories, the ability to resume atmospheric testing on a short notice, and improvements in verifying compliance to the treaty. In 1974, the United States and the former Soviet Union agreed to the Threshold Test Ban Treaty and, in 1976, to the Peaceful Nuclear Explosions Treaty in order to restrict nuclear test explosions to a defined test site and to yields no greater than 150 kilotons. A second self-imposed moratorium on nuclear testing by the United States was established in 1992 and in 1996 the United States signed the Comprehensive Test Ban Treaty banning all nuclear tests. This latter treaty, however, has yet to be ratified by the U.S. Senate.

Department of Defense

The U.S. Department of Defense, with the establishment of the Armed Forces Special Weapons Project (AFSWP) in 1947, had a continuing role post-World War II in the testing of nuclear weapons at the Pacific Proving Grounds and later at the NTS (DTRA 2002). This group evolved over the years through reorganization and mission change into the Defense Atomic Support Agency (DASA) from 1959 to 1971, the Defense Nuclear Agency (DNA) from 1971 to 1996, the Defense Special Weapons Agency (DSWA) from 1996 to 1998, and now as DTRA, established in 1998. General L.R. Groves, who was instrumental in developing the first nuclear weapon during the Manhattan Project and in keeping the military active in the nuclear weapons industry after the war, was appointed chief of AFSWP in early 1947 (DTRA 2002:35). The primary mission was to train military personnel in the assembly, storage, and firing of the atomic weapon, tasks previously conducted primarily by civilian scientists.

By 1949, when AFSWP was set up and operating, it was assigned the tasks of studying the effects of nuclear weapons on targets underwater, underground, and in the atmosphere and for radiological warfare (DTRA 2002:71-72). More tasks soon followed as the agency and the nuclear weapons industry as a whole became more adept. For example, the agency began to provide specialized training and technical support, coordinated storage and oversight of the ever-expanding nuclear weapons stockpile, and became more involved in the planning and operation of the weapons tests (DTRA 2002:80, 104). Most importantly, for the first time the defense agency participated in the development of the nuclear weapons and associated systems. DASA became the new name for the organization in 1959, and with the change, the added responsibility for the supervision of weapons effects tests for all the different military branches (DTRA 2002:149). The agency by this time also served as an integral information source in Cold War strategy for the United States.

Significant changes occurred in the agency during the 1960s. The number and diversity of nuclear weapons, including the associated delivery and defense systems increased dramatically in response to the high state of nuclear readiness of the Cold War policy (DTRA 2002:173). DASA had to modify the weapons effects tests and management of the weapons stockpile accordingly. It also meant changes or upgrades in scientific and technical staff within the organization to increase research and development. At the same time, as the role and prominence of the agency changed,

control of the agency was placed directly under the civilian Secretary of Defense rather than the joint chiefs of the military services. Furthermore, because of the current situations and readiness for immediate response in case of attack, custody of the nuclear weapons stockpile was formally transferred from the AEC to the DoD (DTRA 2002:178). It was agreed that the AEC would be responsible for weapons development, quality assurance of the weapons stockpile, effects tests on warhead components, and management of the NTS; while DoD through DASA would provide testing facilities, certain hardware for diagnostics and data recording, field support, and funding (Brady et al. 1989:9; DTRA 2002:180). Both agencies would still be able to conduct nuclear tests, with devices supplied by the Livermore or Los Alamos national laboratories through the AEC, and both would do research in detecting nuclear tests by other nations.

A major difference in research objectives also occurred between the AEC and DASA (DTRA 2002:189). DASA began to emphasize research on the actual use and effects of the nuclear weapon by the military. This emphasis contrasted with the research interests and desires of the weapon developers for the AEC, whose main focus was on developing the weapon and not how it was going to be used. Because of limits imposed on testing in 1963, three methods of nuclear weapons effects tests were implemented by the defense agency (DTRA 2002:191). The first was improvements in underground testing techniques, particularly for containment; the second was the use of high explosives rather than nuclear explosives for some of the effects tests; and the third was the use of simulators, such as reactors, in some of the effects tests. Large scale simulators, once constructed and operating, could do a series of tests in one day compared to a single nuclear test in a tunnel or shaft that may have taken up to two years to prepare (DTRA 2002:239). High explosive testing could also be prepared faster and easier than a nuclear test and with less safety and security concerns. These types of tests and simulations, however, could not replicate all the experiments and effects that could be conducted with a nuclear explosion, so nuclear testing was still considered necessary. Nuclear testing was also thought to be necessary for testing the reliability of the weapons stockpile (DTRA 2002:250).

Several important changes were made in the 1970s. One was the reorganization of the AEC due to conflicts of interest in regulating itself. It was divided in 1974 into the Energy Research and Development Administration (ERDA) and the Nuclear Regulatory Commission to solve the problem (Buck 1983:8; DTRA 2002:216). Soon thereafter, in 1977, ERDA was incorporated into a cabinet level organization as DOE. A second change was the reorganization and reduced responsibilities of the DASA, including a new name, the DNA (DTRA 2002:216). The new DNA's primary mission now consisted of nuclear weapons management, nuclear weapons testing, and nuclear weapons effects research. Reduction in personnel at the agency was also implemented and reflected the other military branches increasing supervision of the nation's nuclear weapons, particularly by the U.S. Air Force. The bases in Albuquerque came under the control of the Air Force; Johnston Atoll remained under the management of the Air Force, with a lesser role by the DNA; and training in nuclear weapons became the responsibility of each of the military branches. Nuclear weapons training would return to the DNA in the early 1990s, however.

In the late 1970s and early 1980s, DNA had an important role in the buildup of the military and national defense of the United States (DTRA 2002:259). The central theme of this role was survivability from a nuclear weapons attack, particularly the improvement and hardening of the various military weapons systems against such an attack. Efforts were also made to improve and harden communication systems, vehicles, such as airplanes and missiles and their components, and structures, such as underground bunkers. These efforts often used high explosive tests in order to simulate open air reactions or blast effects to the materials and structures as in an actual attack. Earlier weapons effects data from atmospheric nuclear tests at the NTS were also used to bolster these efforts.

The late 1980s and early 1990s heralded the end of the Cold War and an assortment of treaties calling for the reduction of strategic and tactical weapons (DTRA 2002:282, 294). In 1992, the Hunters Trophy test conducted in the U12n Tunnel was the last nuclear weapons effects test at the NTS (DTRA 2002:296). Since then, the NTS has served as a testing ground for non-nuclear munitions against hardened installations. Also, because of changing world conditions and the emergence of weapons of mass destruction and terrorism, the mission of the DNA was re-evaluated and a reorganization was sought that reflected these conditions and the perceived needs of the military. Consequently, the DNA was replaced by the DSWA in 1996 and a new mission focusing on threat reduction, arms control, and support for counter proliferation activities (DTRA 2002:314). DSWA still performed the previous tasks, however, including the management of the military nuclear weapons stockpile. Tantamount to this was the vast amount of information the agency possessed from its inception about nuclear weapons (DTRA 2002:318-319). Programs, such as the Data Archival and Retrieval Enhancement Program, were initiated to assemble data about the technical history of atmospheric and underground nuclear weapons effects testing. These programs enabled the information already gathered over the years to be stored for future use and provide to new defense projects the research material about nuclear weapons effects without having to repeat them.

DTRA was created in 1998, incorporating DSWA, the On-Site Inspection Agency, the Defense Technology Security Administration, and some of the staff from DoD (DTRA 2002:322). While it still retained its nuclear stewardship responsibilities, this newest agency would concentrate on perceived defense threats. Its mission statement is to reduce threats to the United States and its allies from nuclear, biological, chemical, conventional, and special weapons (DTRA 2002:323). These tasks, though somewhat altered due to evolving technologies and management roles, still conform to the mission when the agency first started and it still maintains a key presence in the testing programs at the NTS today.

Nevada Test Site

During the late 1940s, a search was conducted to establish a test site in the continental United States, relatively remote from the populace and near the research laboratories. The main reasons for this were security, shorter travel times, and economic costs in the transportation of people and equipment (Lay 1950; Ogle 1985:44; Tlachac 1991). At the time, testing was conducted at the Proving Grounds

in the Pacific Ocean and was relatively expensive in both cost and time. Security at the Pacific locale was also becoming a major concern, being outside the confines of the United States, and especially due to the situation developing in Korea (DTRA 2002:77). Four places in the United States were seriously considered for a continental testing ground: Camp Lejeune in North Carolina, Dugway Proving Ground in Utah, White Sands Proving Ground in New Mexico, and the Las Vegas Bombing and Gunnery Range in southern Nevada (Lay 1950). The ideal location, in addition to the attributes described above, was to have favorable and predictable weather and terrain conditions to be able to test year round, be under federal control, and have an infrastructure already in place (Lay 1950; Tlachac 1991).

The bombing and gunnery range in southern Nevada was the place chosen that best met the conditions for the continental test site. The first nuclear weapon test, Able of Operation Ranger, was carried out in Frenchman Flat on January 27, 1951 (Ogle 1985:43-44; Titus 1986:58). Construction of the facilities for the Nevada Proving Grounds, as it was originally designated, began soon afterwards. The first land withdrawal by the AEC establishing the official nuclear weapons testing ground in the continental United States was February 12, 1952 under Public Land Order 805. After a series of name changes, it became the NTS on the last day of 1954 and has remained so ever since. Additional land parcels were obtained under public orders and memorandum of agreements. Today the NTS encompasses an area of approximately 1,375 square miles (3,561 sq km), and spans approximately 55 miles (89 km) north-south and 30 miles (50 km) east-west.

A total of 928 atmospheric and underground nuclear tests have been conducted at the NTS, with 120 performed in the 1950s and 808 after 1961 (DOE/NV 2000; Friesen 1995:6, 10). Atmospheric tests number 100, and most were conducted on Frenchman Flat or Yucca Flat. Most of the underground nuclear tests were either in vertical shafts on Pahute Mesa and Yucca and Frenchman Flats or in horizontal tunnels mined into the sides of Aqueduct and Rainier Mesas. Some underground tests were on Buckboard Mesa, Oak Butte, and Dome and Shoshone Mountains.

Atmospheric Nuclear Testing

Between 1951 and 1958, atmospheric nuclear tests on the NTS were conducted in Yucca and Frenchman Flats. The bombs were initially dropped from airplanes, but due to efforts for greater monitoring and a general lack of control on air drops, the devices were placed near the ground, on top of towers, and eventually elevated by balloons to the desired height. Also at this time in the Pacific arena, high altitude tests of large yield were being performed, mostly by balloon, a few on rockets into outer space, and some on barges and underwater (Ogle 1985:49-50). Main objectives of the testing were for monitoring, measuring, perfecting techniques, and technological improvements of the nuclear weapons (Ogle 1985:84-85). Other objectives included physical effects (DTRA 2002:106). Some of the earliest experiments determined the physical effects on naval ships, while later experiments were physical effects on airplanes, tanks, jeeps, automobiles, clothing, docks, and different types of houses, underground structures, and radio and radar transmissions. At the NTS, various structure and building designs were included for civil defense, such as underground shelters, domed subterranean structures, concrete and brick buildings, residential houses, a metal bridge, and

a bank vault. In some cases, Army personnel participated in the tests for preparation of nuclear warfare. Camp Desert Rock, located at the south edge of the NTS, was created to house military and other personnel involved in the nuclear tests as participants or as observers (DTRA 2002:80, 85; Edwards 1997).

Underground Nuclear Testing

The concept of the underground test, versus atmospheric, was presented in the mid 1950s, but was not acted upon until the late 1950s when containment of the nuclear explosions became a major issue (Carothers 1995:16, 20; Johnson et al. 1959:2; Malik et al. 1981:12; Byron Ristvet 2006, personal communication). Radioactive fallout was a safety and health concern for both the workers doing the tests and for the public at large. Following the signing of the Limited Test Band Treaty in 1963, all tests were to be completely contained underground (Schoengold et al. 1996:2). Initially, this posed a new engineering challenge and learning experience and not all tests were able to be contained right away. After a number of underground nuclear tests had been completed, it was determined that radioactive material from nuclear tests could be satisfactorily contained with proper depths of burial, stemming of the drill hole or tunnel, blocking seeps around cables and pipes, and understanding the surrounding geology for possible cracks or other weaknesses (Malik et al. 1981:12-15).

Most of the underground nuclear tests at the NTS have been for either weapons development or for weapons effects (DOE/NV 2000). A few tests had other purposes, such as safety experiments, industrial engineering for the Plowshare program, and seismic monitoring. Weapons development tests evaluated the performance of the nuclear device itself and were usually placed in vertical shafts; whereas, a weapons effects test evaluated the effects on critical components of missiles and warheads, and sometimes entire systems, and was usually conducted in horizontal tunnels deep below ground (Brady et al. 1989:2; Wolff 1984). Generally, two to four years went into the planning, preparation, construction, and post-test analyses of a single underground nuclear weapons effects test.

At DTRA in the early 1960s, a shift toward weapons effects rather than the interests of the weapon developers guided the research (DTRA 2002:189). The effectiveness of the weapons systems during a nuclear attack was a primary concern. To further advance this research and because of the treaty requiring testing to be conducted underground, new methods of testing had to be devised. A range of underground testing options was explored from line-of-sight pipe systems assembled within vertical shafts and horizontal tunnels to hemispherical cavities and underground structures experiments mined or constructed within a tunnel complex or at the bottom of a vertical shaft. DTRA has used each of these options or a combination of the options in the undergound nuclear weapons effects tests they conducted. The primary objectives of a DTRA underground nuclear weapons effects test were to construct a facility in which to install, expose, and protect the experiments; record data obtained from the experiments; contain the nuclear detonation and its byproducts underground; and recover the experiments and equipment after a test was conducted.

As underground testing techniques improved, horizontal tunnels increasingly were preferred over vertical shafts by DTRA because of the flexibility they provided (DTRA 2002:193-194). Rooms could be readily mined in tunnels to house various sized equipment, including entire systems rather than just parts of systems. Secondary drifts could be added or drifts from a previous test could be used to place additional experiments and equipment. In contrast, the number and size of experiments were more limited in vertical shafts. Moreover, when line-of-sight pipes were constructed in vertical shafts, experiments and signal conditioning equipment positioned over the shaft had to be quickly pulled off the test locale to keep them from falling into the subsidence crater that often developed shortly after the test.

Recovering equipment and experiments from the tunnels was standard practice and was undertaken with great caution because the nuclear explosion potentially created hazardous physical conditions and the possibility of high radiation levels (LRL 1961). Hazardous conditions included damage from the shock wave, which may result in a total or partial collapse of the test drift or the main tunnel; upheaval of the floor or movement along fault lines; damage to the utility infrastructure, such as ventilation; and the presence of trapped toxic and explosive gases.

Rainier Mesa

DTRA and the national research laboratories began studies in the mid 1950s on the development of underground complexes to meet their testing needs. These studies, which included high explosive testing and geology, indicated that the Rainier Mesa area could be a good location for underground nuclear testing. High explosive tests conducted in the U12a Tunnel supported the concept and Rainier Mesa was subsequently selected for this purpose. LLNL started work in Rainier Mesa by developing the U12b, U12c, U12d, U12e, and U12f tunnel complexes in the mid to late 1950s. The first underground nuclear test in a tunnel, code named Saturn, was a safety experiment and took place at the U12c Tunnel in August 1957 (DOE/NV 2000:8). The Saturn test had zero yield. The Rainier weapons related test with a yield of 1.7 kiloton was conducted in the U12b Tunnel a month later and was the first contained underground nuclear detonation in the world (Carothers 1995:31; DOE/NV 2000:10).

Geology of Rainier Mesa, an erosional volcanic remnant, consists of 2,000 to 3,000 ft (610 to 914 m) of volcanic ash-fall tuff resting on earlier granitic and sedimentary rock (LaComb et al. 1996:11). It is capped at the surface by welded or rhyolitic ash-flow tuff, 150 to 300 ft (46 to 91 m) thick, more dense and stronger than the underlying tuff. Below the caprock is an unsaturated section of friable and vitric bedded tuff 600 to 800 ft (183 to 244 m) thick and below that is a thin section of welded tuff, followed by a thick section of zeolitized and water-saturated bedded tuff lying on older granitic and sedimentary rocks (LaComb et al. 1996:11). This lower bedded zeolitized tuff section is between 650 and 1,150 ft (198 and 351 m) thick and is where most of the tunnel complexes were mined. It is divided into Tunnel Beds 1 to 4, with Tunnel Bed 1 being the lowest. A more detailed description of these beds is provided in Appendix A.

The degree of water or air-void content of the geologic formations was found to affect the speed of the shock wave traveling through the rock and that certain locations for ground zero were better suited than others for the best transmission of the shock wave. Geologic samples were taken of the rock formations before mining of the tunnel drifts in order to place the nuclear device in the most optimum location. Horizontal exploratory core holes drilled from within the tunnel were typically 3.25 inches (8.26 cm) in diameter and from 1,000 ft (305 m) to 2,500 ft (762 m) in length. Cores from these holes were tested for such things as bulk density, moisture content, grain density, porosity, compressive strength, triaxial compression, ultrasonic shear and compressive wave velocity (Horton et al. 1987:12). This testing was usually performed for DTRA by the Holmes and Narver Testing Lab at the NTS and by TerraTek Corporation from Salt Lake City, Utah. These data were used to map and understand the surrounding geology of the tunnel in order to design a plan to properly construct the test bed facility and to protect the experiments and the environment both inside and outside the tunnel complex.

Experiment Protection

Because the 1963 Limited Nuclear Test Ban Treaty required nuclear tests to be contained underground, new methods of testing had to be devised. A steel pipe, hundreds of feet long attached to a steel box (A-Box) containing the nuclear device, was soon discovered to be the solution (Figures 3-4). This configuration, called a line-of-sight pipe, was placed in a horizontal or vertical position depending on where the test was located, in a tunnel or shaft, and served to enclose and protect experiments from the surrounding geologic media. It was also possible to create a vacuum inside the line-of-site pipe to simulate a high altitude atmospheric or exoatmospheric environment.

The horizontal line-of-sight pipe used in tunnels was tapered to support an expanding cone of radiation which emanated from the nuclear explosion (Figure 5). The horizontal line-of-sight pipes were as small as 4 inches (10 cm) in diameter at the end nearest the nuclear device and from 10 ft (3 m) to 27 ft (8 m) in diameter at the portal end; lengths varied from 100 ft (30.5 m) to 1,900 ft (579 m). Samples or experiments were placed in test chambers located at the portal end of the pipe and were exposed to the radiation effects of the nuclear detonation as they passed through the pipe. The pipe was constantly checked with lasers for proper alignment during construction. Following pipe installation and alignment, an extensive vacuum check was conducted to determine if any leaks were in the pipe system or if there were any foreign materials in the pipe that would out gas, thereby lowering the ability to obtain the desired vacuum. Leaks were repaired and stemming of the annulus between the pipe exterior and the tunnel wall was started following a successful vacuum check. This stemming was done early to allow the heat of hydration generated by the curing grout to decrease to a level that would not distort the laser beam during installation and critical alignment of the experiments. Materials used in grouting this section of the drift are described later in the Containment section.

Experiments were mounted on special non-metallic bulkheads in test chambers (see Figure 6). Experiments were also placed in an assortment of stub pipes at the end of the pipe. The stub pipes functioned to reduce the fluence level traveling down the horizontal line-of-sight pipe as required

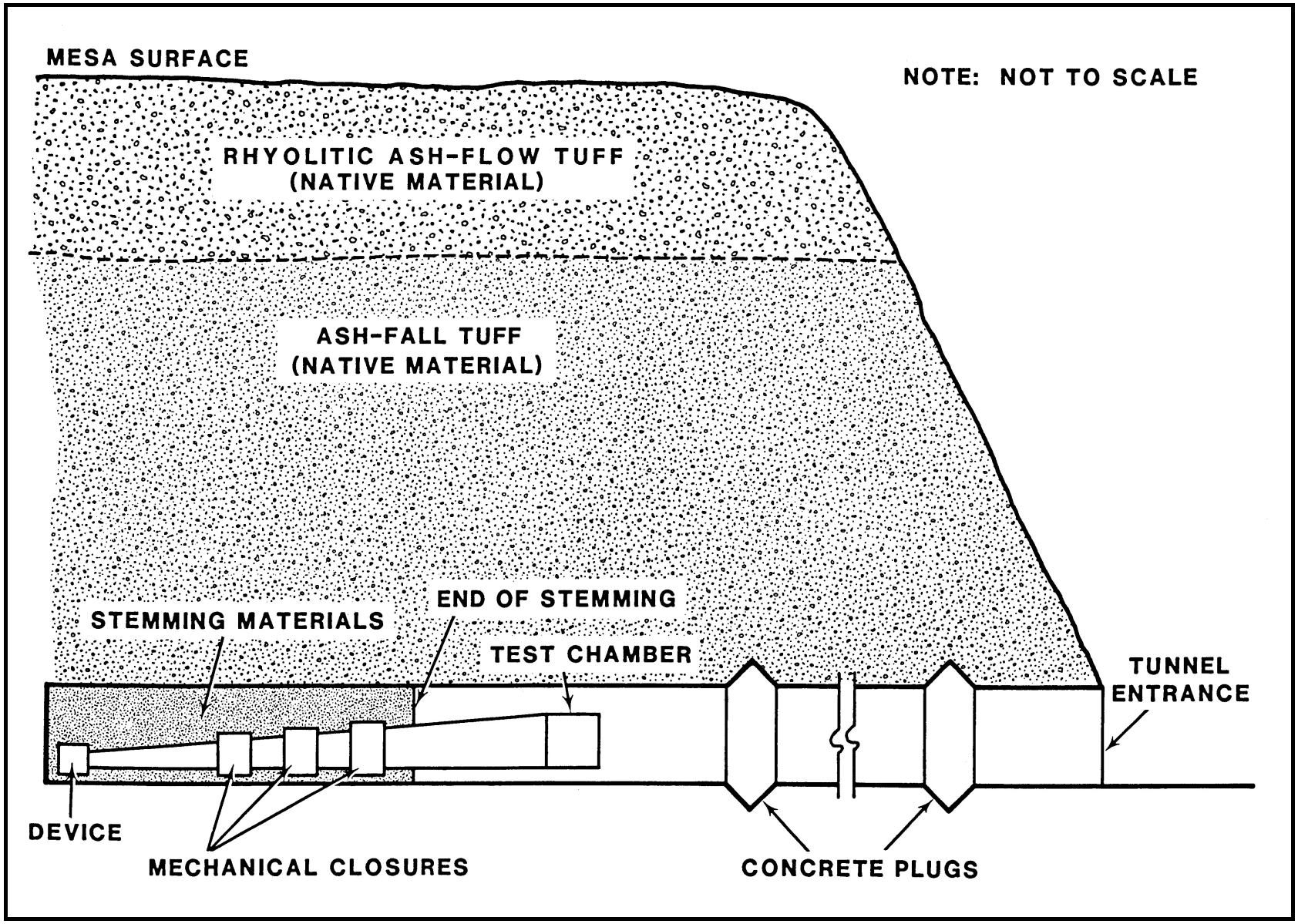

Figure 3. Schematic of a horizontal line-of-site pipe for tunnels (Horton et al. 1987).

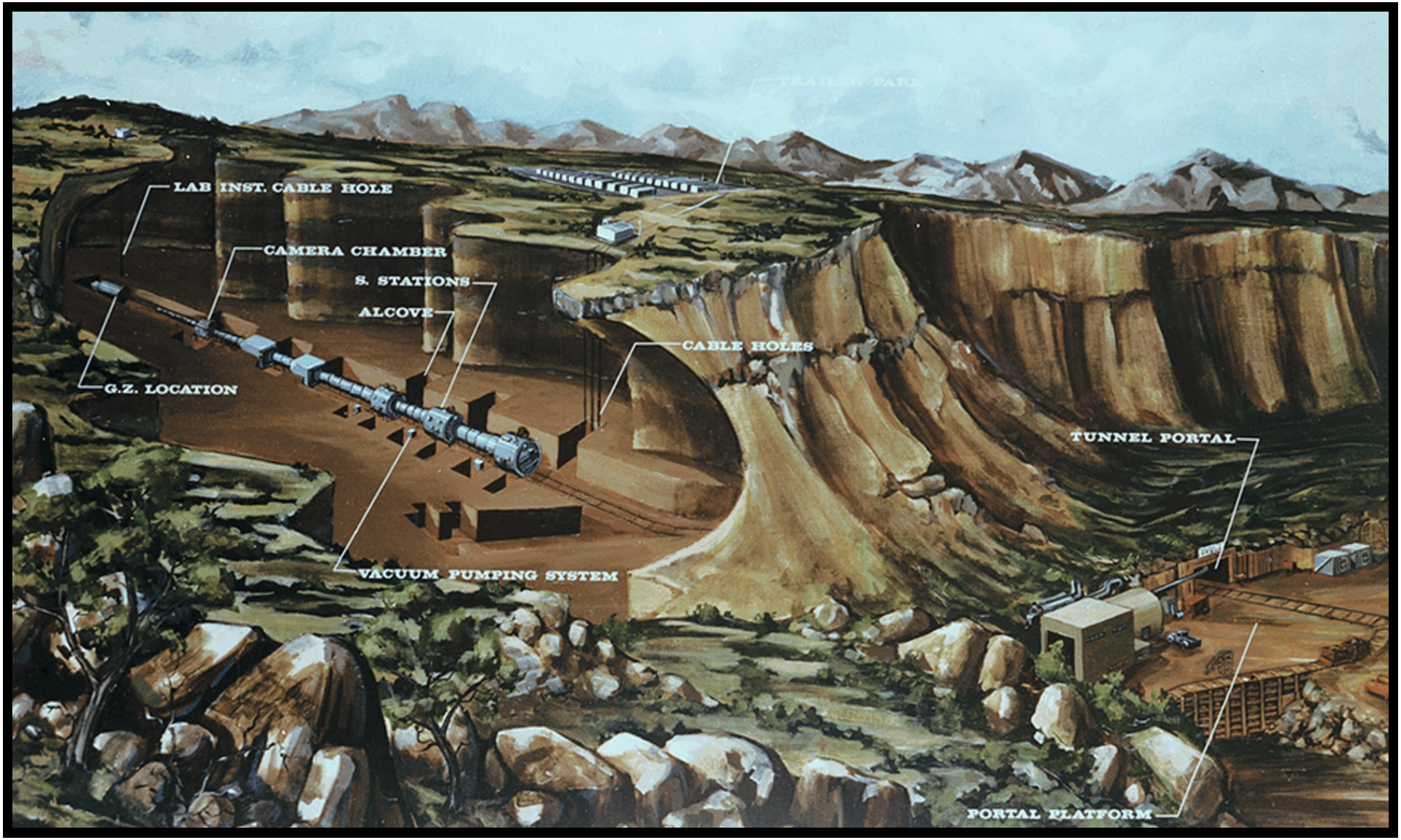

Figure 4. Typical layout of an underground nuclear weapons effects test (photograph on file at Remote Sensing Laboratory, Las Vegas).

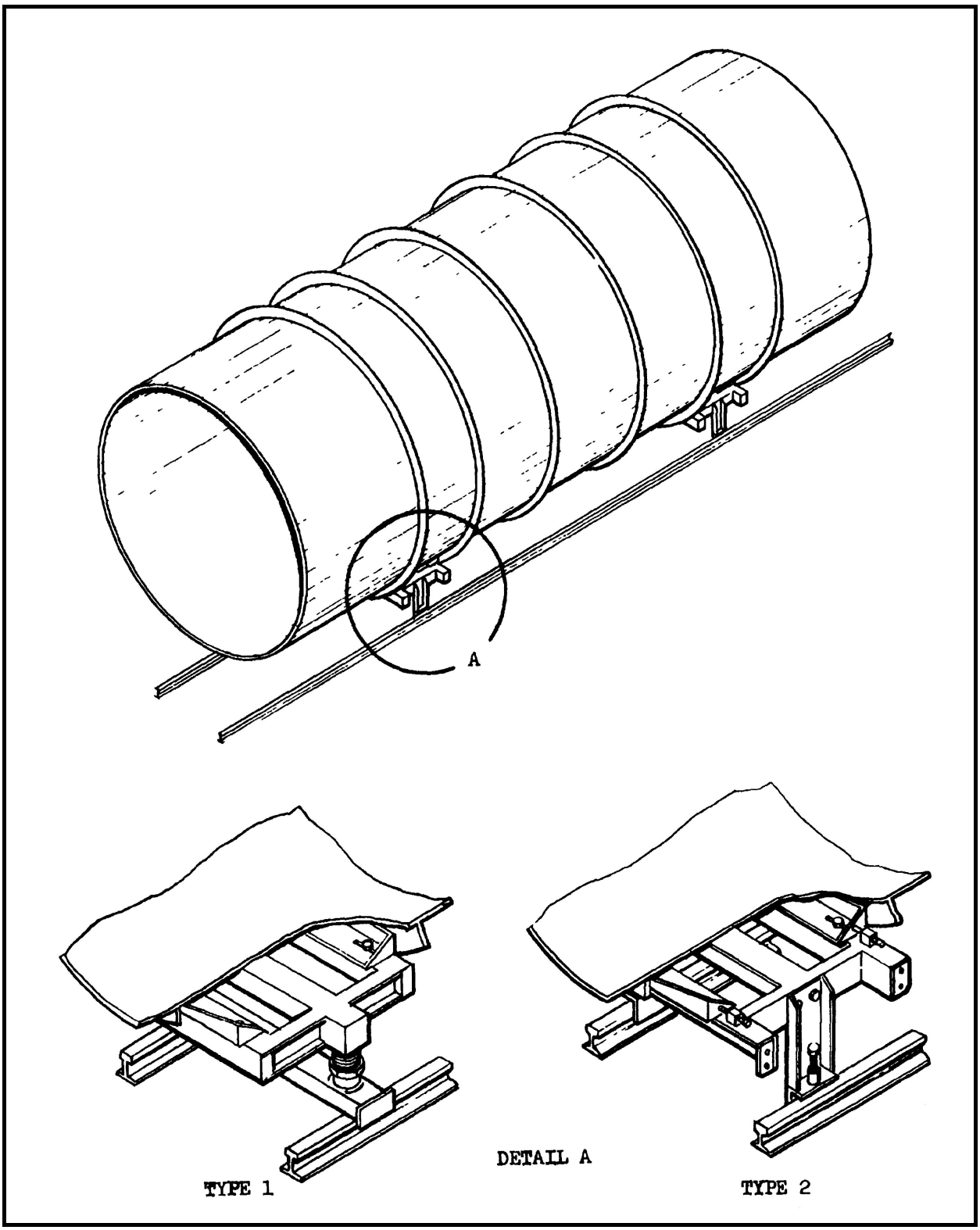

Figure 5. Sketch of a typical conical line-of-sight pipe section and supports (Carpenter 1971). Note the use of the tunnel rail system for attaching and aligning the pipe supports.

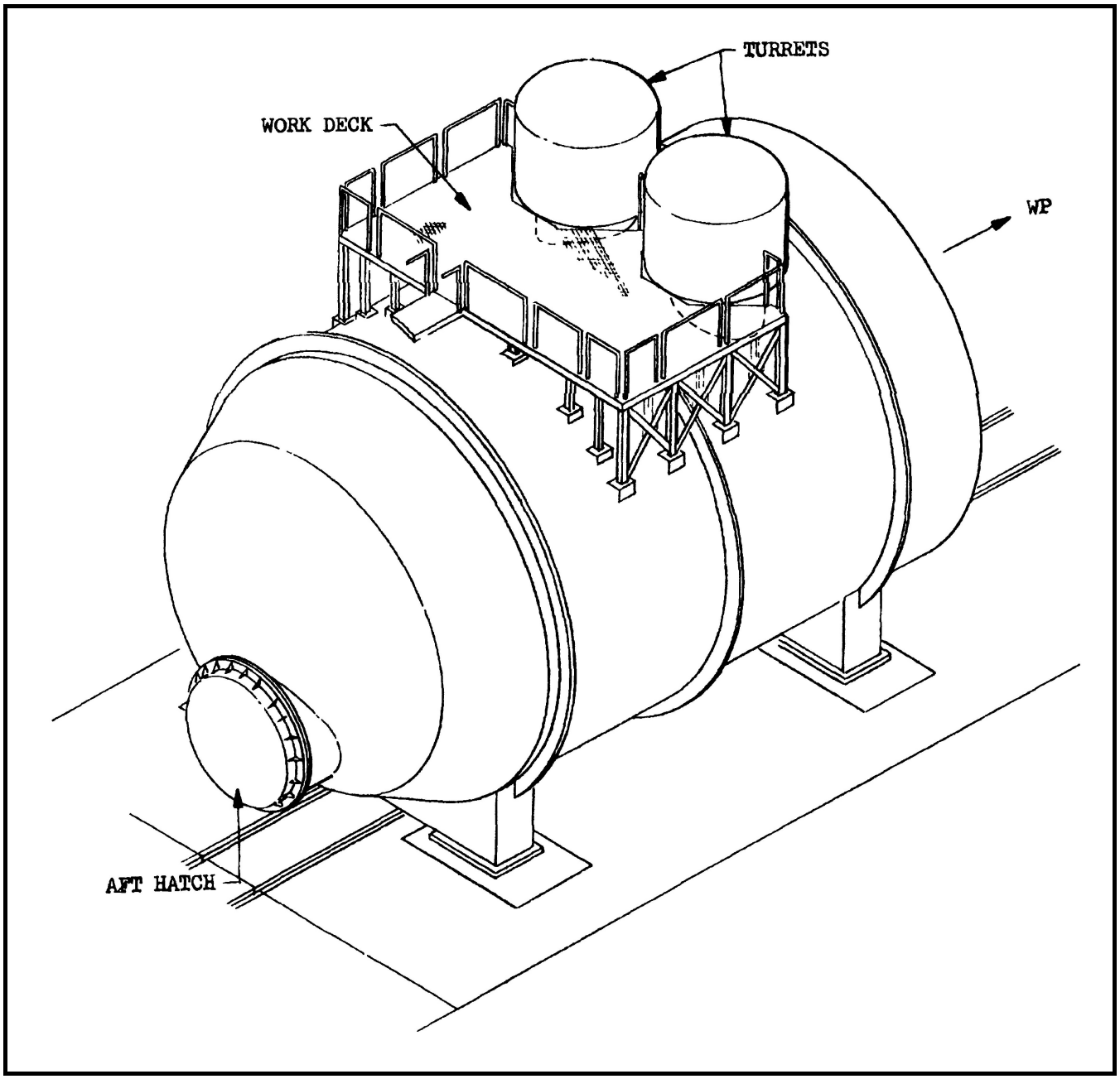

Figure 6. Sketch of the test chamber for the Diamond Sculls test (Carpenter 1971).

for some experiments, support increased vacuum requirements for some experiments, or create a specific environment for experiments where isolation from the test chamber was required.

As a final check, just prior to installing the device in the A-Box at ground zero, an x-ray source was used to verify alignment of each experiment in relationship to other experiments and to the eventual nuclear exposure. The temporary x-ray source was placed at ground zero and the exposure face (working point side) of each experiment was covered with photographic film. Following exposure to the x-rays, the film was developed and carefully reviewed to verify that all experiments would be fully exposed to the nuclear source and that no experiment would shadow another.

Another challenge for underground nuclear weapons effects tests was preservation of the samples or equipment being tested (DTRA 2002:193). The objective of the test was to produce radiation from the nuclear explosion, allow it to travel through a line-of-sight pipe at the speed of light, and irradiate the experiments. The problem was that debris traveling down the line-of-sight pipe following the radiation, but at slower velocities than the radiation, could also strike and potentially destroy the experiments. The solution was to install a series of fast-closing gates or closures that effectively closed the pipe after the radiation had passed, thereby, preventing the debris from damaging or destroying the experiments. The first of these gates was the Fast Acting Closure located closest to ground zero, about 200 ft (61 m) away (Figure 7). The Fast Acting Closure had a 30 inch (76 cm) diameter line-of-sight opening, surrounded by a copper sleeve that was surrounded by an aluminum sleeve. The sleeves were encircled with 500 pounds of high explosive data sheet and the explosive was surrounded by lead. The high explosive drove the copper and aluminum sleeves into the line-of-sight opening, creating a plug, and closing the line-of-sight pipe within one millisecond after detonation of the nuclear device. The Gas Seal Auxiliary Closure was the next in line (Figures 8-9), about 400 ft (122 m) from ground zero. The line-of-sight opening in the Gas Seal Auxiliary Closure was about 60 inches (152 cm). The closure had two 1 ft (30.5 cm) thick high-strength aluminum alloy doors that slid across the line-of-sight opening from opposite sides, sealing it within 30 milliseconds. Its function was to stop debris and provide a tight closure so gases would not escape. The Tunnel and Pipe Seal was the third and final closure in the series (Figure 10). The Tunnel and Pipe Seal, positioned about 500 ft (152 m) from ground zero and weighing approximately 45 tons, included a massive steel round door, hinged at the roof, and held open in a horizontal position by an explosive bolt. The bolt released the five ton door at exactly the same time device detonation occurred, allowing the door to free fall, close, and seal the pipe in about 750 milliseconds. The purpose of the Tunnel and Pipe Seal was to prevent radioactive gases and any debris that might get past the first two closures from damaging experiments in the test chambers. The Tunnel and Pipe Seal was designed to withstand 1,000 degrees Fahrenheit and 1,000 psi gas pressure for a period of two hours. A decoupler was located in the line-of-sight pipe about 600 ft (183 m) from ground zero, just outside the end of stemming. The decoupler was specifically designed with flexible segments to mitigate the effects of the shockwave traveling down the line-of-sight pipe and avoid damage to experiments in the test chambers. For some tests, a muffler was installed in the line-of-sight pipe near the device (Figure 11). This was an expanded section of pipe that created turbulence and stagnation, thereby reducing the flow of energy down the pipe (DOE/NV 1987:15).

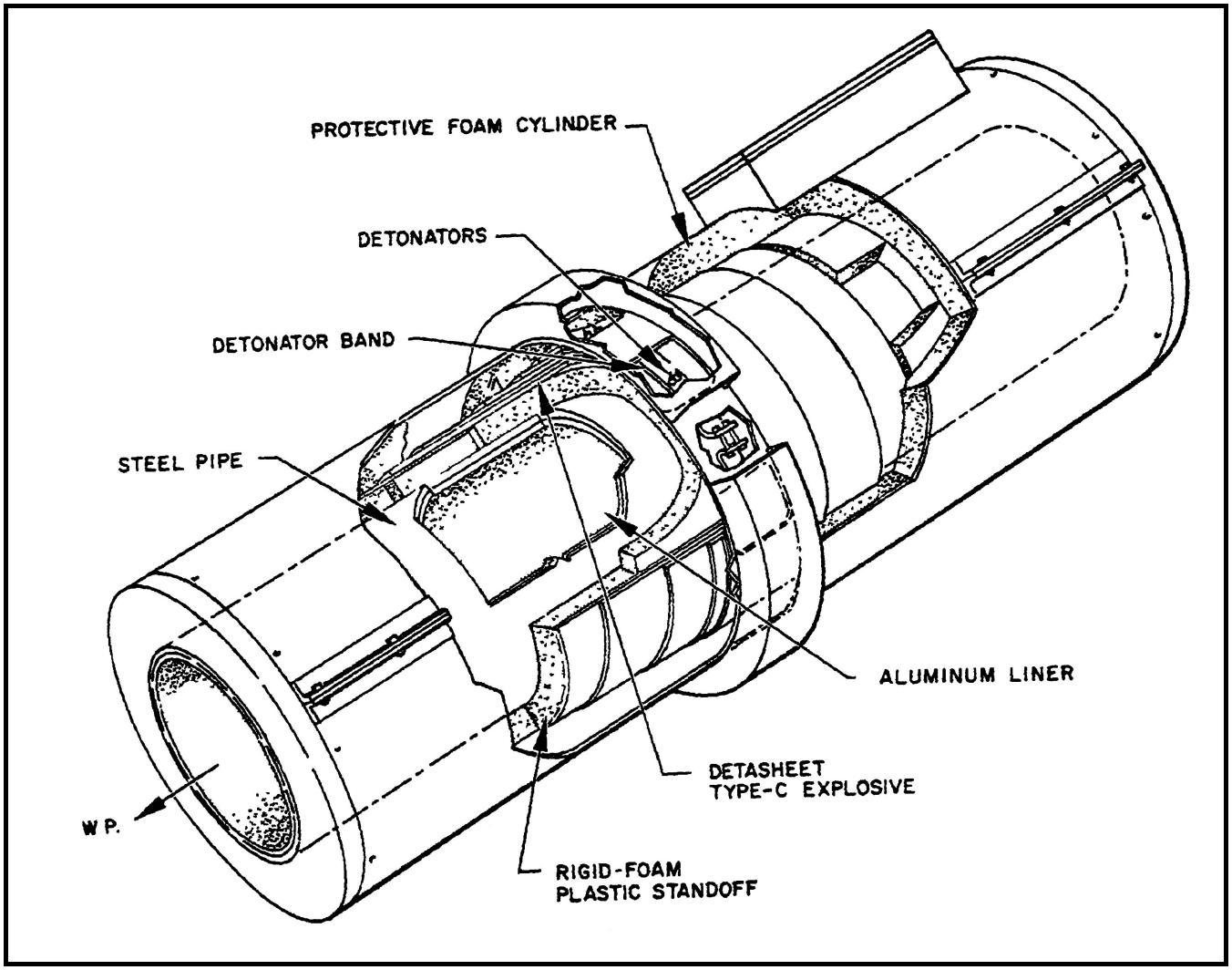

Figure 7. Sketch of a High Explosive Machine or Fast Acting Closure (Buys and Williamson 1972).

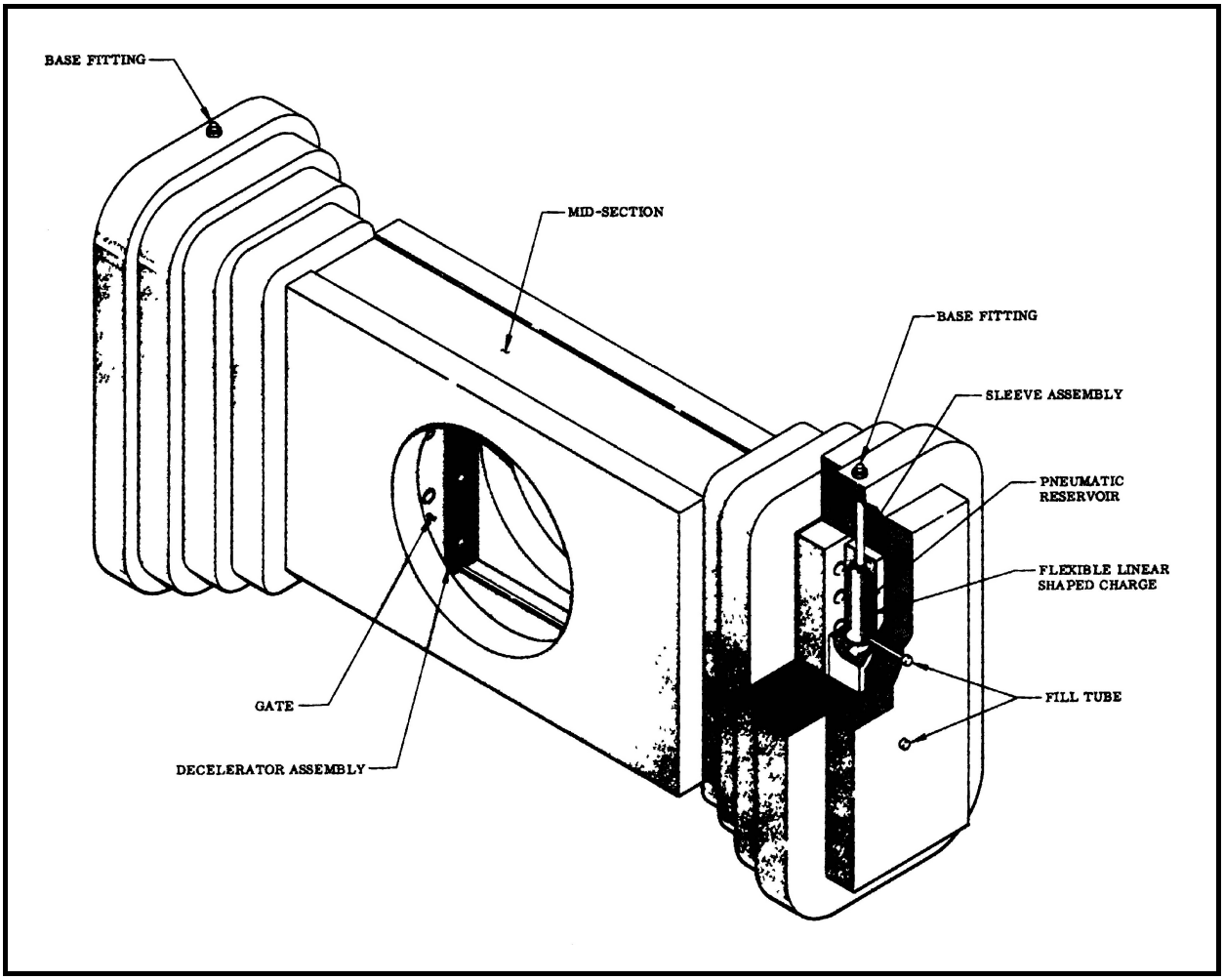

Figure 8. Sketch of a Sandia Auxiliary Closure (Buys and Williamson 1972).

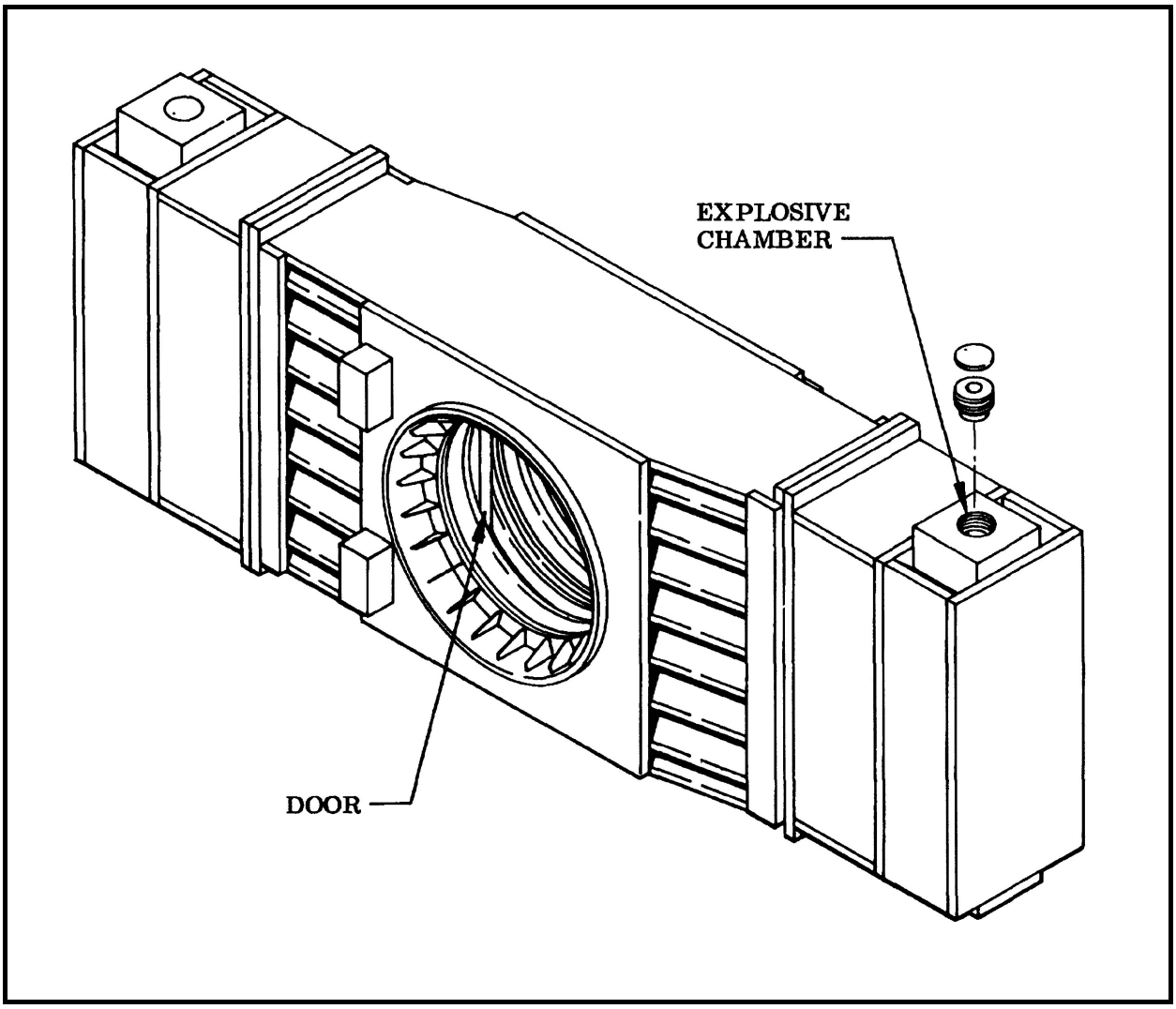

Figure 9. Sketch of the DNA Fast Door or Auxiliary Closure (Buys and Williamson 1972).

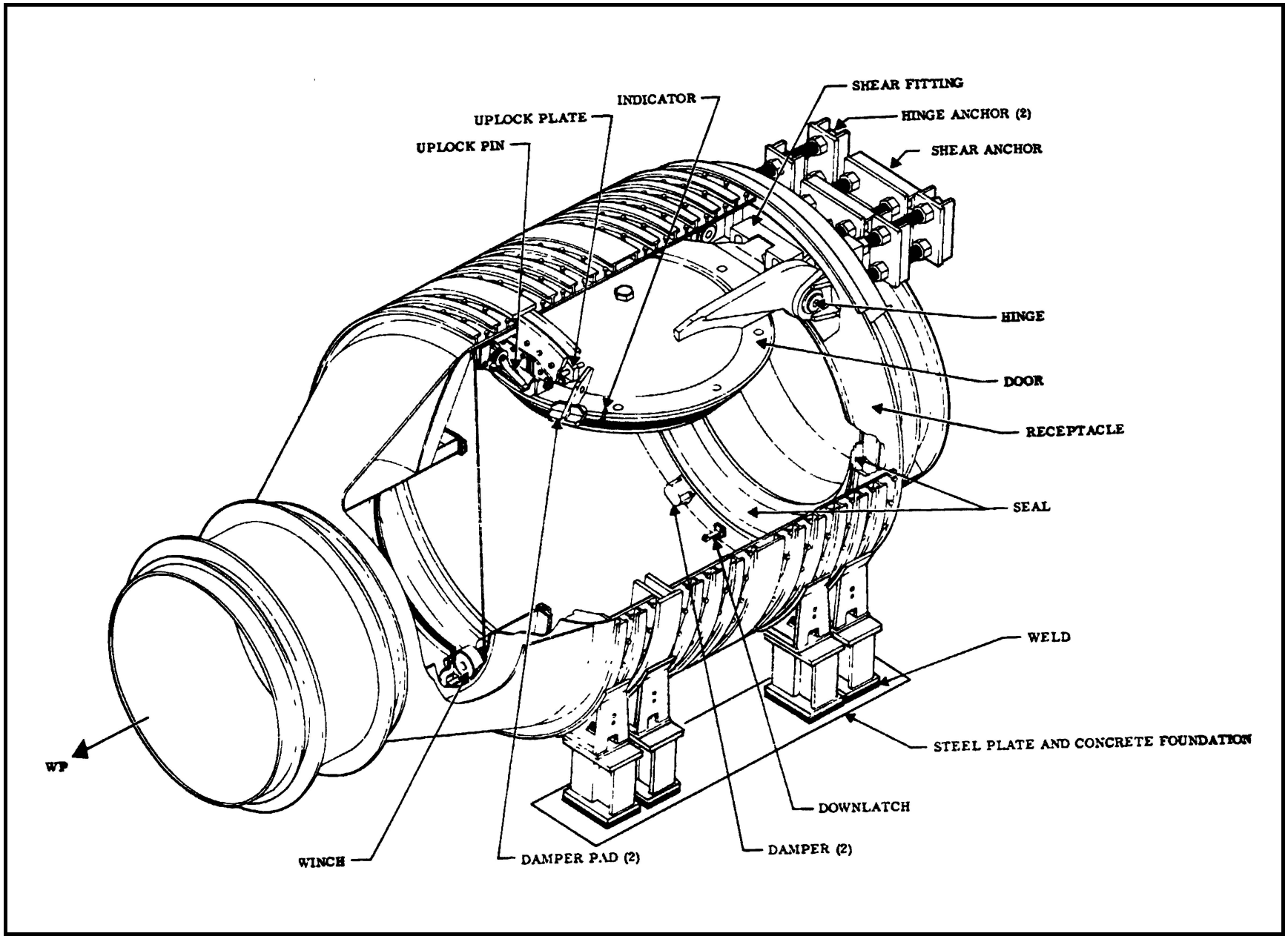

Figure 10. Sketch of a Tunnel and Pipe Seal (Carpenter 1971).

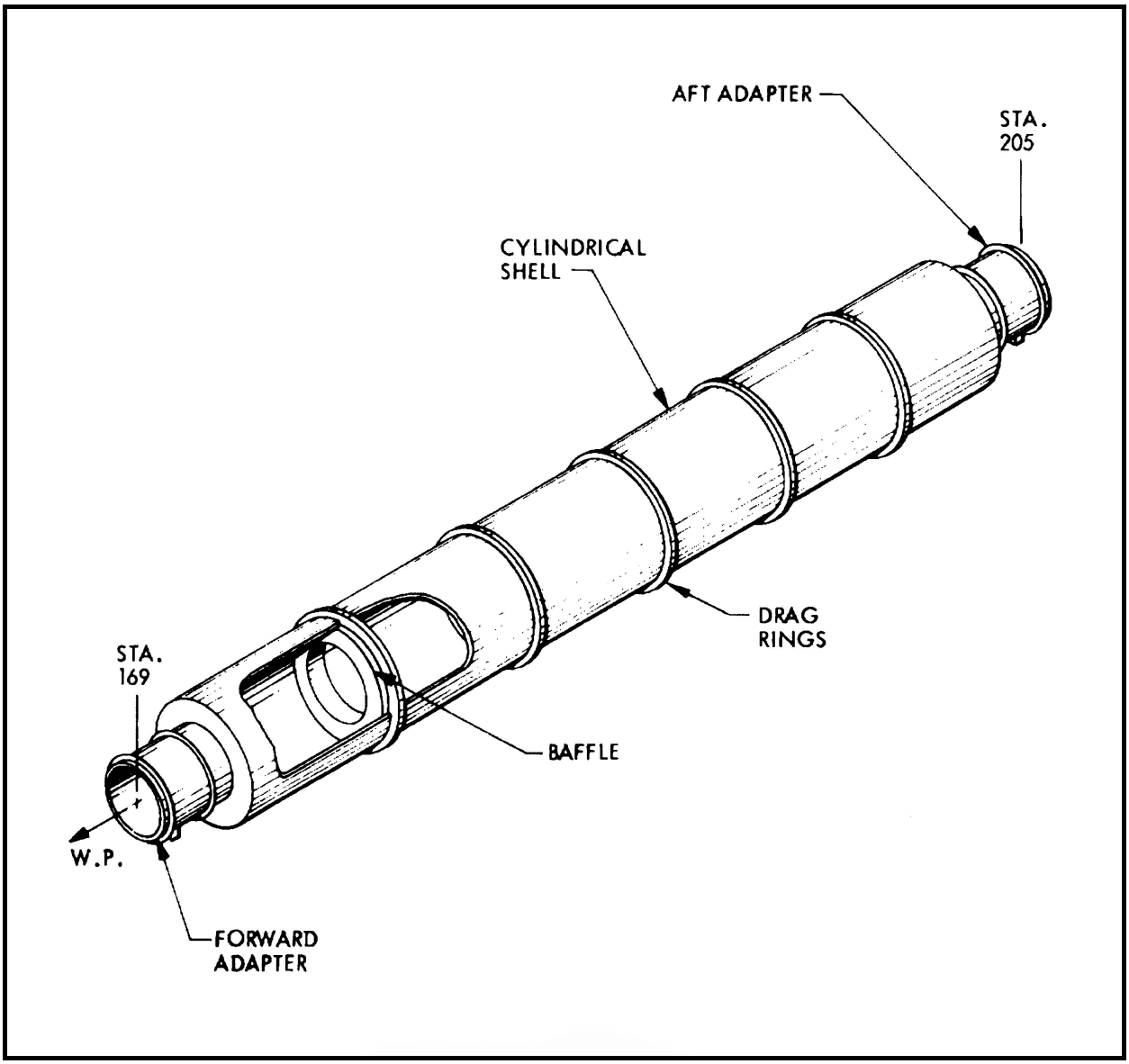

Figure 11. Sketch of a Muffler for a line-of-sight pipe (Wilson 1976:32).

The horizontal line-of-sight pipe, device canister (A-Box), test chambers, test chamber experiment bulkheads, and vacuum systems were manufactured at the Lockheed Shipbuilding and Construction Company in Seattle, Washington when other construction activities allowed. If the shipyard facilities were not available, the pipe system fabrication was subcontracted to either American Pipe and Construction Company of Portland, Oregon or Welk Brothers, Inc., of Spokane, Washington. The horizontal line-of-sight pipe system was trucked to the NTS in sections by Widing Transportation, Inc., of Portland, Oregon. Prior to shipment, the test chambers and bulkheads were taken to the Lockheed shipyard facilities in Seattle and assembled with mock experiments (wood templates) to verify the critical fit and proper alignment. When the pipe sections arrived at the NTS, they were transported underground on the tunnel train system for final assembly. Lockheed Missiles and Space Company provided technical guidance during the installation. Other features of the pipe system were designed by Sandia National Laboratories. Sandia National Laboratories designed, procured, and shipped the Fast Acting Closures; although, the Fast Acting Closure was not used at the U12t Tunnel.

Data Recording

Initially, data were gathered from the underground tests by sensors and cables stretching from the experiments mounted in the test chambers and other underground instrumentation to recorders in trailers positioned outside the portal (DTRA 2002:196). Cables also extended from the nuclear device to the portal. The ability to drill large diameter holes had been developed by the time DTRA began testing at the tunnel complexes and trailer parks for instrument trailers on top of the mesa became feasible. It was more economical to drill the holes vertically into the tunnel complex from the top of the mesa and install a permanent cable plant in the tunnels. This was a shorter path than to the portal and cut the costs in cable lengths. The shorter cable lengths also provided a better and faster signal to the recording instruments (Ristvet et al. 2007). All cables installed in the drill holes were gas blocked at the bottom where they entered the tunnel and at the top where they exited the hole on the mesa. The entire cable hole was grouted for containment purposes. The underground cable runs consisted of jumper cables from the experiments in the test chambers to a gas block connector in the wall of the line-of-sight pipe, and then to a signal-conditioning equipment alcove located within a few hundred feet of each test chamber. The conditioned signals were then routed via cables to the underground splice alcove at the bottom of the cable hole where each cable was attached to a gas block connector. On the mesa, one end of another jumper cable was attached to a gas block at the top of the cable hole and the other end was connected to an instrumentation trailer where the signal was recorded.

Following installation of temporary signal generators in the test chambers, configuration of the instrumentation equipment in the alcoves and on the mesa, and set up of the Control Room in the DTRA data recording station at the Control Point in Area 6, the test equipment was ready for Signal Dry Runs. Signal Dry Runs were necessary to work out any flaws in the instrumentation recording systems. The temporary signal generators were each activated by a timing and firing signal initiated at the Control Point in Area 6. The temporary signals were then sent through the entire instrumentation system to the final recording station. The DTRA Scientific Director was in charge

the Signal Dry Runs. The Control Room was operated for DTRA by the EG&G Corporation, Las Vegas. Signal Dry Runs were conducted until every experiment and associated recording device operated flawlessly. This process could take up to two months. The final Signal Dry Run was referred to as the Mandatory Full Participation Dry Run. Upon conducting a successful Mandatory Full Participation Dry Run, the test bed was ready for installation of the nuclear device. After the nuclear device was installed, the final containment stemming operation took place.

Eventually, the original mix of cables became outdated when faster signals were required and not enough coaxial cables were available in the existing cable holes to the mesa. To satisfy the requirement, a new recording system was developed. The Recorder and Oscilloscope Sealed Environmental System (ROSES) was a portable, climate controlled, mini version of an instrumentation trailer and it was used underground to house electronic equipment for recording data from the experiments. It was first used in 1975 on the Dining Car test in the U12e Tunnel to validate the system during an actual test. The ROSES was designed by Electrical Engineer Robert L. Shirkey of the DTRA Nevada Operations Office, who was also responsible for procurement and monitoring during their initial use. The ROSES units, holding up to six racks of electronic recording equipment, could be placed underground and closer to the test chambers than was possible with the instrumentation trailers on the surface. This allowed for faster recording of high-speed data generated from the later tests. The ROSES units were shock-mounted in a manner similar to the instrumentation trailers; that is, with crushable foam pads and anchored to the back and invert of the drift to keep them from tipping over. They were cooled by a complex 250 ton combination underground and surface chilled water system.

The ROSES was successfully used on all tests from Dining Car in the U12e Tunnel through Midas Myth/Milagro in the U12t Tunnel. During the Midas Myth/Milagro test, the tunnel walls and roof collapsed destroying most of the ROSES units. Fortunately, during the interval that the ROSES units were being used, a recording system that utilized fiber optic cables was being developed. The loss of the ROSES units and final development of the fiber optic recording system coincided enough that the new system was soon implemented. Configuration of the new fiber optic system began with data from the experiments to underground recording alcoves being transmitted primarily on fiber optic cables. In 1983, the Tomme/Midnight Zephyr weapons effects test conducted in the U12n Tunnel was the first test to be fully recorded underground (DTRA 2002:388). The recording alcoves created a pressurized and sealed environment with a concrete Alcove Protection Plug placed in the entrance to protect the recording equipment and recorded data post test. Instrumentation racks, assembled in groups of four to ten and mounted on wheels, were transported underground by train, offloaded at the entrance to the recording alcove, and rolled into position. The racks were shock mounted and tied off to the back and floor of the tunnel for stability during ground shock. The Alcove Protection Plug, with a 36 inch (91 cm) to 48 inch (122 cm) diameter crawl tube through it for personnel access to the alcove, was built after the recording equipment was installed. The crawl tube was closed and the alcove was pressurized to five pounds per square inch prior to the test.

The data recorded in the instrumentation alcoves could be transmitted to a secondary data recording station at the portal, called a Portal Recording Station. The Portal Recording Station was capable of

storing data in computers as well as transmitting it a distance of 20 miles (32 km) over fiber optic links to a third recording station at the Control Point. There, the data was printed out soon after the test so technical personnel and test group staff could quickly evaluate the data quality and quantity. Prior to employing this new fiber optic system, along with the underground recording capability, data had to be manually retrieved from recording equipment at the portal, on the mesa, or from the ROSES underground. This type of data recovery could take days and even weeks, and sometimes the instruments recording the data were destroyed or contaminated.

Containment

Containment of tunnel tests was developed and continually refined as a result of lessons learned during postshot analyses of expended tests and the in-depth technical calculations that resulted in the design of what is described as the three nested vessel system. The first of these, Vessel I, is the horizontal and vertical region surrounding ground zero and extending out for a distance of about 600 ft (183 m) to the ends of stemming in both the bypass and line-of-site drifts. It was designed to withstand the effects of ground shock and contain the cavity temperature, pressure, and radiation. Immediately following insertion of the device in the A-Box, the Zero Room was filled with sandbags to eliminate as many voids as possible and to aid in keeping the room dry. Stemming in each drift consisted of similar types of cement grout, with stemming of the line-of-site drift normally completed two to three months prior to final button-up of the bypass drift. Three types of grout were used: Rock-matching Grout, Super Lean Grout, and High Strength Grout. Rock-matching Grout, designed to match the shock velocity and other characteristics of the surrounding natural rock, was used in the first zone of stemming extending outward from the Zero Room. The purpose of Rock-matching Grout was to allow the nuclear cavity to grow uniformly as much as possible. The next stemming section was called Super Lean Grout. Super Lean Grout was designed to behave like toothpaste being squeezing from a tube. It would easily flow when compressed by the shock wave, filling any natural or shock induced fractures in the rock. In the early development of Super Lean Grout, sections with different colors were placed in the line-of-site drift. Reentry drifts, which were mined post test to evaluate the containment design, would encounter the different colors of Super Lean Grout, thereby enabling the containment scientist to determine how far it traveled. Continuing beyond the Super Lean Grout region was a mixture called High Strength Grout. High Strength Grout was used for the last several hundred feet, or to the end of stemming, and was designed to act like a high strength plug or anchor. Finally, all mechanical and electrical penetrations that exited the end of stemming were protected with redundant 1,000 psi and 1,000 degree Fahrenheit rated valves and cable connectors.

Vessel II in the nested vessel containment system included Vessel I and extended out to the Overburden Plug. The objective of Vessel II was to provide a larger tunnel volume to dissipate energy in case of a containment failure in Vessel I. The Overburden Plug was designed to contain any radioactive gases that could potentially seep from the line-of-site pipe or from the end of stemming. The Overburden Plug was located within the tunnel complex so that the depth of rock over the plug would have an overburden pressure equal to or greater than 1,000 psi. All electrical and mechanical features that extended through the Overburden Plug had gas block connectors or

containment valves on both sides of the plug with a design rating of 1,000 psi and 1,000 degrees Fahrenheit for a minimum of one hour. The containment valves at the Overburden Plug could be opened or closed underground, from the portal, or from the Control Point.

Vessel III in the nested vessel containment system included Vessels I and II and extended out to the Gas Seal Plug. Its primary purpose was to ensure that no radiation escaped to the atmosphere if the first two containment vessels failed. The Gas Seal Plug, a concrete mass approximately 15 ft (4.6 m) thick, was located within the tunnel complex so that the depth of rock over the plug would have an overburden pressure equal to or greater than 500 psi. The Gas Seal Plug was placed far enough away from the Overburden Plug to provide a tunnel volume large enough to reduce the design to 500 psi and 500 degrees Fahrenheit for one hour. The same cable connectors and mechanical valves as used on the Overburden Plug were used on the Gas Seal Plug, but only on the Portal side of the plug.

The Gas Seal Plug was a later addition to the containment scheme. Originally a steel door, known as the Gas Seal Door and located closer to the portal, was used in conjunction with the Overburden Plug. The Gas Seal Door was designed for 75 psi for one hour. The Gas Seal Door was closed and pressure checked for leaks just after completion of the stemming operations and prior to test zero time. After several uses, however, it was discovered just prior to a test that ground shock had distorted the steel plates in the Gas Seal Door and it would no longer hold pressure. This created an urgent need for a new plug that had to be built before the current test could be conducted. A new concrete plug was hastily constructed between the Gas Seal Door and the Overburden Plug so as not to delay the test any longer than necessary. As a result, this plug was called the "Hasty Plug." The name lasted a few years until the Gas Seal Plug concept was developed. Even though the old Gas Seal Door would not hold pressure, it was still closed on Button-up as a redundant plug to stop any debris that may have traveled that far.

Button-Up Activities

Tunnel Button-up activities normally involved at least one representative from every agency associated with the test. Button-up normally started the day before the test, known as D-1, and extended straight through until completed, just prior to test time. The Button-up team consisted of a Team Chief and his deputy, both of whom were DTRA personnel from the Nevada Operations Office; members of the Test Group Directors staff, including the Test Construction Engineer and the Cable Coordinator; the Architectural and Engineering Project Engineer and his deputy; the Construction Contractors staff, including the Project Manager and the Mining, Mechanical, and Electrical Superintendents; and the DOE Project Engineer for Mining. The function of the Button-up team was to verify that all experiment requirements, both mechanical and electrical, were in test configuration; all features, structural, mechanical, and electrical, were in test configuration; and that the entire tunnel complex was configured to support post test activities.

Prior to Button-up, a DTRA staff engineer and the Cable Coordinator developed detailed mechanical and electrical systems check lists to show how the facility would be configured at test time. The Button-up check lists generally filled a thick notebook binder and covered all features within the

entire tunnel complex. Button-up of items and areas of the tunnel not directly related to the current test were completed on D-1. Test related activities, such as recording alcoves, were buttoned-up as the experimenters completed their activities and were ready to depart the tunnel. All other button-up activities, starting at the end of stemming in both the line-of-sight pipe drift and the bypass drift, through the containment plugs and out to and including the portal, were started as soon as the Laboratory Device Engineer completed their work and turned the complex over to the Button-up team. Construction crafts completed last minute tasks, such as closing gates, late time sandbag shielding, and removing blocks from under recording equipment racks so they were resting on the shock mounting material. At this time, the Button-up team, the Laboratory device arming team, and the Security Force were the only people in the tunnel.

Following the arming of the device, the Button-up team started working its way out the tunnel, checking every item on its respective check lists. As the Button-up progressed, the Security Force secured areas within the tunnel. At the Overburden Plug, the Gas Seal Plug, and the Gas Seal Door all mechanical features were closed per containment requirements (i.e., tunnel ventilation ducts, water lines, and compressed air lines). As each was closed, the status of the Button-up was reported to personnel in the Monitoring Room at the Control Point. The Monitoring Room personnel monitored all systems and tracked the progress of the Button-up Team so, if necessary, a problem could be repaired before continuing. When the Button-up Team reached the portal, the Electrical Team component completed their checklists by placing the portal electrical systems in shot and reentry configuration. The Mechanical Team component verified that the retention ponds downslope were empty. When the Button-up was completed, the Team Chief notified the DOE Test Controller's office that the team was on its way to the Control Point. The Wackenhut Services Security Force escorted the team. After a final all-is-ok meeting, the DOE Test Controller gave the Laboratory Device Engineer the okay to start the final countdown.

Detonation

When the firing signal is sent to the nuclear device for a typical DTRA underground nuclear weapons effects tunnel test there is a sequence of significant phenomena that happen upon detonation (DOE/NNSA 2004:126-127; U.S. Congress 1989:32). These phenomena begin within a few nanoseconds of the detonation and include the prompt release of radiation down the line-of-sight pipe to expose the experiments; the mechanical closures (e.g., Fast Acting Closure and Tunnel and Pipe Seal) are triggered; and a shockwave, essential for closing the line-of-sight pipe and containing the extremely high temperatures and pressures created in the nuclear cavity, begins to expand radially from the device.

The energy of the shockwave eventually overcomes the line-of-sight pipe, the surrounding super lean grout, thereby collapsing and closing the tunnel and the line-of-sight pipe before it reaches the mechanical closures. The collapsing and closing of approximately the first 200 ft (61 m) of the tunnel and pipe supports the containment concept for Vessel I. The shockwave, depending on the size of the test, can be monitored many thousands of miles away from the detonation point as seismic waves.

At the same moment the experiments are being exposed to radiation generated during the detonation and ground shock is beginning to close the line-of-sight pipe, a cavity surrounding the zero point is forming. The thermal energy reaches several million degrees Kelvin and instantly vaporizes the device canister, the sand bag fill, and the surrounding rock. As the cavity expands outward it reaches its maximum size when the pressure is equal to the overburden pressure of the surrounding rock. The final diameter of the cavity is therefore dependent upon both the yield and the depth of burial of the device. The expanding shockwave crushes and fractures the rock until it becomes so weak that it no longer has an effect on the rock. At the cavity, the thermal energy melts the surrounding rock and it condenses in the bottom of the cavity. The growth of the cavity stops when the stress field in the surrounding rock is greater than the pressure in the cavity. Within minutes and up to days following detonation the cavity pressure decreases to the point it no longer supports the overlying rock and the roof collapses into the cavity void. This further weakens the rock above the cavity where additional rock collapse occurs. This process continues until the rubble filled chimney stops growing. The height of the rubble filled chimney for a tunnel nuclear weapons effects test may extend to the underside of the overlying cap rock on the mesa.

Reentry and Recovery

After detonation of the nuclear device, the DOE Test Controller and his staff monitored the data from the Remote Area Monitoring System units inside the tunnel and outside at the portal and on the mesa. These units detected and measured gamma radiation. The weather at the NTS, as well as in the surrounding areas, continued to be monitored. When all conditions were correct, the DOE Test Controller gave permission to prepare for manned reentry to the portal area and to trailer parks on the mesa. The Reentry Teams assembled at the Construction Trailer located at the Control Point. Following a briefing to the teams on current status of the areas, the DOE Test Controller gave permission to proceed to the portal first. The Portal Reentry Team, upon arrival at the portal, quickly assessed the condition of the area. If all appeared safe and the readings from the Remote Area Monitoring System units were normal, the team started to reestablish the portal power. Experiment recovery teams for both the mesa and portal trailer parks would depart the Control Point area while portal power was being reestablished. Power to the trailers would also be reestablished and data recovery would start soon after.

Tunnel reentry and experiment recovery operations required more precise industrial hygiene monitoring than most other operations within the tunnels. This was due to the potentially hazardous environment that industrial hygiene and radiation safety personnel, construction crafts, and scientist could encounter during reentry and recovery operations. Prior to sending reentry and recovery personnel underground, the Remote Area Monitoring System was used to determine if radiation, toxic gasses, or explosive mixtures were present and, if so, at what concentration. The Health Physicist then used that information to determine what level of personnel protective equipment was required to protect members of the reentry and recovery teams.

Tunnels were routinely ventilated by way of controlled releases after each test so workers could work in them without unnecessary exposure to toxic, explosive, or radioactive gases. During a controlled

release the air was discharged in measured amounts, which would then be diluted by the atmosphere to trace amounts so as not to endanger anyone's health. Depending on the conditions within the tunnel and the weather for the next few days, tunnel ventilation could be reestablished between the portal and the Gas Seal Door. The Portal Reentry Teams would then depart the Portal Area. Security would remain on the access road to both the portal and the mesa until work crews arrived the next morning. The following morning the Reentry Control Staff would meet at the Control Point to assess the current status of the Remote Area Monitoring System units in the tunnel and the weather report for the day.

During the time the Reentry Control Staff were being briefed, the Tunnel Reentry Teams would be getting prepared to go underground. Anti-contamination suits and Self Contained Breathing Apparatus were worn for the initial reentry into the tunnel (see Figure 12). Three reentry teams would suit up, two for reentry and one for rescue, if required. If tunnel conditions up to the Gas Seal Door were acceptable and permission was received, a work team would go to the Gas Seal Door, open it, and reestablish the rail line through it so the reentry teams could ride a train to the Gas Seal Plug. The work team would establish a communication line so the Reentry Teams could maintain constant communication with the Reentry Control Staff at the portal. Ventilation was also reestablished through the Gas Seal Door to the portal side of the Gas Seal Plug.

As soon as the teams were suited and ready and the Gas Seal Door had been opened, the Staff Health Physicist briefed them on the current status of the tunnel based on latest readings from the Remote Area Monitoring System. When the briefing was completed, and with the DOE Test Controller's permission, the Primary Reentry Team would enter the tunnel and proceed to the Gas Seal Plug using the man train. No electrical power was established until the initial reentry and tunnel condition assessment was completed so, except for their headlamps, the Reentry Team worked in total darkness. At the Gas Seal Plug, the team checked for radiation and any gases that may be present on the working point side of the plug and reported the data to the Reentry Control Staff at the portal. With approval of the DOE Test Controller, the team then opened the ventilation line containment doors and reconnected the ventilation ducts so air could be circulated to the portal side of the Overburden Plug. The crawl tube door in the Gas Seal Plug was then opened and the team proceeded to the Overburden Plug using the man train that was purposely left on the working point side of the Gas Seal Plug by the Button-up Team. At the Overburden Plug, the procedure was repeated. The Reentry Team then proceeded to the line-of-sight pipe drift and the Test Chamber area. There they assessed tunnel conditions, took radiation and gas measurements, and checked for fallen rock, bad ground, or any other debris that could hamper experiment recovery. If all was okay outside the line-of-sight pipe and Test Chamber, the team remotely sampled for radiation and gases inside the pipe. If levels inside the pipe were acceptable, the team opened the Test Chamber doors far enough to get a quick look inside at the experiments. The Reentry Team then returned to the portal where they were checked for any contamination, removed the anti-contamination clothing, and showered and dressed. If conditions were acceptable the experimenters would then enter the tunnel to begin recovering their experiments and data.

Figure 12. Reentry team, U12t Tunnel, 1970 (photograph 3233-13, on file at the Nuclear Testing Archive, Las Vegas).

Responsibilities

The Manager of the U.S. Department of Energy, Nevada Operations Office administered all activities at the NTS, including real estate and facilities, support services, and the planning and execution of nuclear tests. The Manager delegated authority to execute a nuclear test to a DOE Test Controller, who assumed responsibility for the safe conduct of the test. The Test Controller had authority to delay, postpone, or proceed with a nuclear test. The Test Controller assumed complete operational control of the NTS during the test execution period which started the day, D-1, before the test through to completion of the initial reentry following the test. The NTS returned to normal operations only when the Test Controller determined it was safe for employees and the environment.

Test Group Directors, appointed by DTRA or the National Laboratories (i.e., LLNL or LANL), directed the fielding and technical aspects of experiments and tests and were also responsible for compliance with applicable environmental laws and regulations. The LLNL or LANL Test Group Director, depending on which laboratory supplied the nuclear device, assumed responsibility for radiological safety from the time the device was delivered to the tunnel until it was detonated. After detonation, the DOE Test Controller assumed responsibility for radiological safety until it was determined that no uncontrolled venting had occurred. The tunnel was then transferred back to the DTRA Test Group Director for post test reentry and recovery operations.

The Reynolds Electrical and Engineering Company (REECo), Inc., Environmental Sciences Department, performed all radiological safety services for the tests and was accountable to each of the Test Group Directors before and after the tests (Mullen and Eubank 1977). Agencies with experiments on a test were responsible for design, preparation, installation, post-test removal, and analyzing and reporting experiment data. James Metcalf, Health Physicist, Sandia National Laboratory, provided Health Physics support to the DTRA nuclear weapons effects test program from 1969 until the last test in 1992. He worked closely with REECo personnel to design and develop a Remote Area Monitoring System. REECo was responsible for installing and maintaining the Remote Area Monitoring System. They also ensured that calibrated radiation monitoring instruments and an adequate supply of personal protective equipment i.e., self-contained breathing apparatus and anti-contamination clothing were available. Metcalf provided real-time post test radiation data and analysis to the DOE Test Controller and DTRA Management. Upon receiving approval from the DOE Test Controller, Metcalf briefed every tunnel reentry and recovery team on the type of environment they could expect to encounter. Metcalf was the lead communicator with the reentry teams and responsible for recording all communications. He was also responsible for knowing exactly where the reentry team was underground and the physical condition of each team member at all times; for knowing what conditions they had encountered; for advising the Test Group staff; and for maintaining a detailed hand written log of activities. A second log was maintained by the REECo lead Health Physicist; thereby, providing DTRA and DOE with complete and redundant documentation of the reentry and recovery operations for each test.

Fenix & Scisson, Inc., designed and engineered the tunnels and drill holes; REECo constructed the tunnels; and Lockheed Missile and Space Corporation developed the test beds, specifically, the

line-of-site pipes used to house and protect experiments, and the vacuum systems to reduce the internal pressure in the line-of-sight pipe to near zero psi. Holmes and Narver, Inc., and later Raytheon Services, Nevada, provided architectural and engineering services for the NTS. They provided civil, structural, electrical, and mechanical design support for the NTS including development of the tunnels. LLNL and LANL provided the nuclear devices, while Sandia National Laboratory was responsible for arming and firing the LLNL devices. LANL conducted their own device arming and firing. EG&G, Inc., supplied instrumentation for the National laboratories, while Bendix Corporation, and later Honeywell, Inc., supplied instrumentation for DTRA experiment recording. The U.S. Geological Survey, and later Fenix & Scisson, Inc., provided detailed mapping of the geology (Ristvet et al. 2007; Townsend 2007). The U.S. Army Corps of Engineers, Waterways Experiment Station was responsible for designing and developing concrete and grout mixes and for quality control during the blending and batching process in preparation for stemming placement. REECo performed all mining and construction and was responsible for operating and maintaining the tunnel complexes.

ENVIRONMENTAL SETTING OF THE U12T TUNNEL

The NTS is within the southern portion of the Great Basin, characterized by high mountain ranges interspersed by valleys and bolsons (Dohrenwend 1987). Climate is characterized by limited precipitation, low humidity, and extreme daily temperature ranges. Generally, the lower elevations have dry, hot summers and mild winters, while the higher elevations have increased precipitation and lower temperatures. Most of the precipitation on the NTS is in the form of snow and winter rainstorms, with an occasional storm during the fall and spring. Rainstorms do occur in the summer, but are rare. The U12t Tunnel Portal Area is at the north end of the NTS, beneath and on the east sloping flanks of the lower slopes of Aqueduct Mesa. Aqueduct Mesa abuts and is north of Rainier Mesa and several hundred feet lower in elevation. Both mesas comprise a relatively flat highland between Pahute Mesa to the west and Yucca Flat to the east (Howard 1985:8). The portal is at an elevation of 5,600 ft (1,707 m). The highest elevation above the tunnel on the top of Aqueduct Mesa is 6,942 ft (2,116 m).

The U12t Tunnel is reached from Mercury, at the south end of the NTS, by initially traveling north on the Mercury Highway and the Rainier Mesa Road for approximately 39 miles (63 km), over Checkpoint Pass, through Frenchman Flat, over Yucca Pass, and through Yucca Flat to the North Mesa Road turnoff to the north just below the Area 12 Camp (Figure 13). About 1.6 miles (2.6 km) further north on the North Mesa Road, a fork is reached with the North Mesa Road continuing to the left or northwest for the U12t Tunnel and the road to the right or north for the U12p Tunnel. Another 1 mile (1.6 km) further northwest on the North Mesa Road, entrance to the U12t Tunnel is made by exiting to the right and proceeding through a gate. The North Mesa Road at one time went up the side and to the top of the mesa, but this section of road has since been abandoned.

Located at the lower boundary of the Great Basin Desert, vegetation around the U12t Tunnel area is classified as a singleleaf pinyon tree (*Pinus monophylla*) and black sagebrush (*Artemisia nova*) woodland (Ostler et al. 2000). This woodland typically occurs on slopes, mesas, plateaus, and ridges of dry mountain ranges of the Great Basin region and eastern foothills of the Sierra Nevada (Brown 1994; NatureServe 2003). It is found exclusively in the northern part and at the higher elevations of the NTS, particularly on Pahute and Rainier Mesas. Black sagebrush dominates the association, representing over 50 percent of the plants. Other common plants include the Utah juniper tree (*Juniperus osteosperma*), green rabbitbrush (*Chrysothamnus viscidiflorus*), and big sagebrush (*Artemisia tridentata*).

Nearly 80 percent of the fauna on the NTS consists of insects, and of these, most are ants, termites, and beetles (Castetter and Hill 1979; Greger 1994; Medica 1990; O'Farrell and Emery 1976; Wills and Ostler 2001). The more noticeable fauna near the U12t Tunnel are coyote (*Canis latrans*), badger (*Taxidea taxus*), kit fox (*Vulpes macrotis*), mule deer (*Odocoileus hemionus*), raven (*Corvus corax*), red-tailed hawk (*Buteo jamaicensis*), chukar (*Alectoris chukar*), quail (*Callipepla gambelii*), jay *(Aphelocoma coerulescens*), golden eagle (*Aquila chrysaetos*), mice (*Perognathus parvus*), kangaroo rats (*Dipodomys microps*, *Dipodomys ordii*), squirrels (*Ammospermophilus leucurus*, *Spermophilus townsendii*, *Spermophilus variegatus*), jackrabbits (*Lepus californicus*), cottontails *(Sylvilagus*

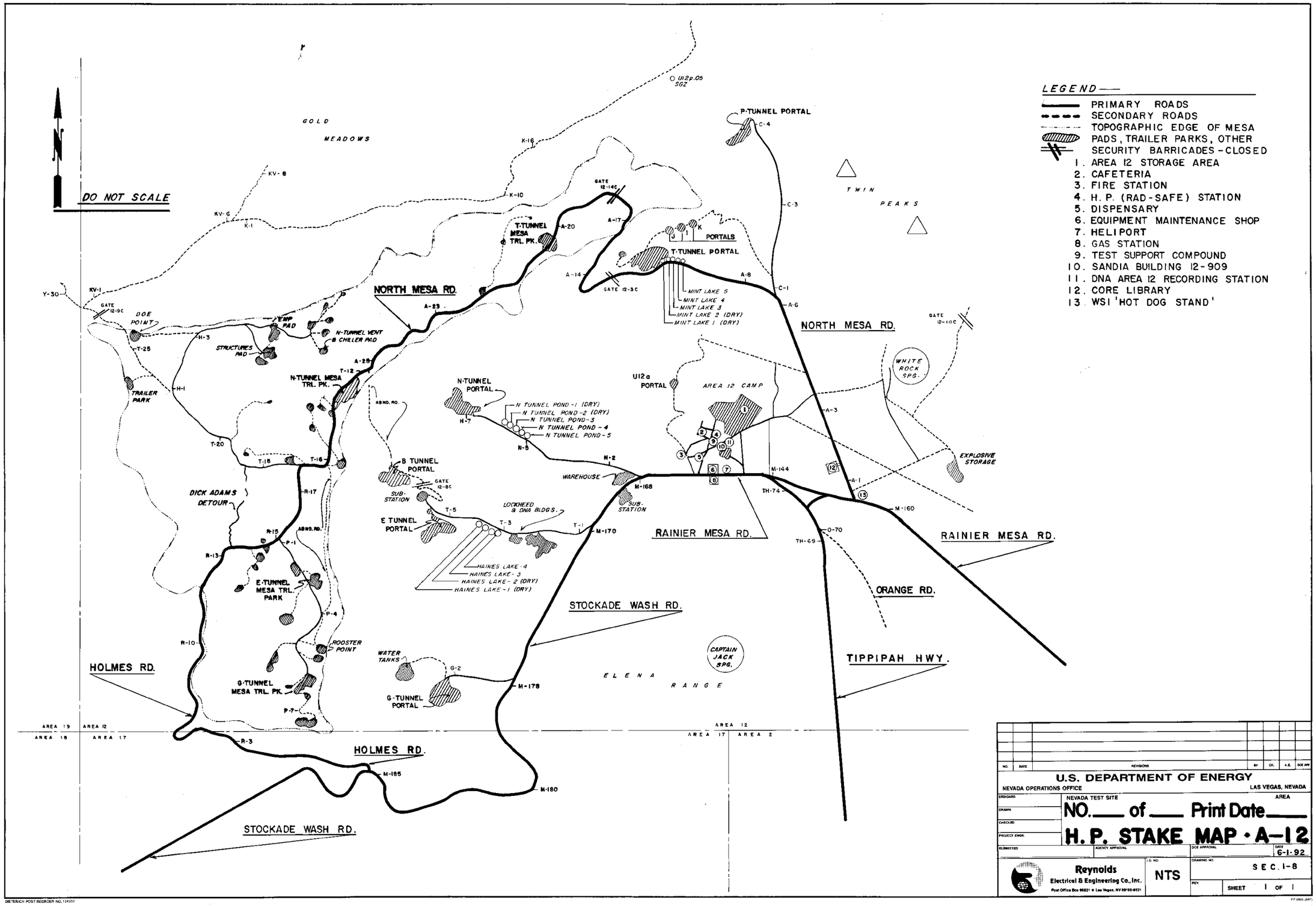

Figure 13. Map of Area 12 tunnel complexes and roads, 1992 (drawing SEC.1 08, on file at the Archives and Records Center, Mercury).

audubonii, *Sylvilagus nuttallii*), lizards (*Sceloporus graciousus*, *Sceloporus occidentalis*, *Eumeces skiltonianus*), and snakes (*Chionactis occipitalis*, *Pituophis melanoleucus*, *Crotalus mitchellii*, *Crotalus lutosus*, *Crotalus stephensi*). Other animals known to occur in the region are mountain lion (*Felis concolor*), pronghorn antelope (*Antilocapra americana*), and the occasional bighorn sheep (*Ovis canadensis*).

Permanent natural water sources for the NTS are springs and seeps. The nearest natural water source to the U12t Tunnel is White Rock Spring, about 2.2 miles (3.54 km) to the southeast. Rainier Spring located between the U12b and U12e Tunnels is 2.38 miles (3.84 km) to the southwest. Captain Jack Spring is 3.25 miles (5.23 km) to the south. Tongue Wash seep is 4.3 miles southwest (6.9 km). None of the springs and seeps produce enough to meet current public water supply.

Topography on the east slope of Aqueduct Mesa is steep and rugged, and stream valleys are narrow and steep. Prominent, deeply entrenched bedrock streams on Aqueduct Mesa and Rainier Mesa include "The Aqueduct" and a tributary that bisects the mesa part of the study area. "The Aqueduct," a major tributary to Tongue Wash, drains about 5,000 acres (2,070 hectares). At the base of Aqueduct Mesa, the U12t Tunnel portal is in a smaller (about 1,800 acres or 700 hectares) east-west trending tributary valley that drains the southeastern flanks of Aqueduct Mesa. The principal access road leading to the U12t Tunnel complex is in the center of the lower part of this valley; near the U12t Tunnel portal the road is along the valley margins.

Soils of the NTS are similar to those of surrounding areas and include Aridisols and Entisols (Peterson 1988; Taylor 1986; Wesling et al. 1992; Whitney et al. 1986). The degree of soils development reflects their age, and the soils types and textures reflect their origin. Entisols generally form on steep mountain slopes and in stream valleys along active washes. Aridisols commonly are older and form on more stable alluvial fans and stream terraces. In the U12t Tunnel complex area, older hillslope soils formed on colluvium derived from Tertiary rocks have well developed B horizons that contain accumulations of calcium carbonate present on the undersides of stones, although there are only a few exposures where road building has cut through thick colluvial mantles. Elsewhere, hillslope soils are thin and weakly developed, minimally developed on tailings slopes, and weak to undeveloped along the major wash along the base of the tailings pile. Exposures of well-developed soils were not observed on the mesa top.

Geology of the Rainier Mesa and Aqueduct Mesa area is described (LaComb et al. 1996; USGS 1978) as consisting of 2,000 to 3,000 ft (610 to 914 m) of layered calc-alkaline Tertiary ash flow, peralkaline ash fall of the Indian Trail Formation (Hoover 1972), reworked ash fall, and tuffaceous sandstone units. These units were deposited on an irregular surface of Mesozoic granite at the northern edge of the mesas and Paleozoic sedimentary rocks comprised of carbonate and clastic rocks under the central and southern parts of the mesa. The top of Aqueduct Mesa is capped by a thick, competent, welded ash-flow.

Rock units encountered within the U12t Tunnel complex consist of Tertiary bedded non-welded high silica vitric tuffs formed from ash-fall tuff and densely welded tuffs of similar high-silica, rhyolitic

composition of the Belted Range Tuffs (Frizzell and Shulters 1990), principally within Tunnel Bed 4, subunits G-K of the Indian Trail Formation (see Appendix A). The degree of welding affects the density and competency of the tuffs as well as influencing fracture patterns and fracture frequency as well as porosity and permeability. Paleozoic rocks consisting of Devonian, Silurian, and Ordovician dolomite and limestone, which are possibly correlative to Devil's Gate Limestone and Nevada Formation (rock unit Ddc of Sargent and Orkild 1973) underlie the Tertiary section well below the level of the U12t Tunnel complex.

Tertiary rock units are represented by Oligocene to Pliocene volcanic and volcaniclastic rocks that include ash-fall tuff, tuffaceous sandstone, welded tuffs of the Belted Range Tuff, which consists of the Grouse Canyon Formation (Frizzell and Shulters 1990) and the Indian Trail Formation, Grouse Canyon member (Gibbons et al. 1963), and ash-fall tuffs coeval with the Timber Mountain Tuff and related lavas (Frizzell and Shulters 1990; Sargent and Orkild 1973) and with the Survey Butte member of the Piapi Canyon Formation (Dickey and Emerick 1962; Gibbons et al. 1963). These two ash-fall units were initially mapped as units or members of the Oak Spring Formation (Hansen and Lemke 1957) and over the years, variations on this theme have emerged (see Appendix A). At the surface and in the U12t Tunnel, bedrock exposures indicate the geologic structure consists primarily of northwest striking beds with northeast dip angles of 6 to 30 degrees, north northeast and north northwest trending high-angle faults, prominent fracture zones and north northwest trending syncline (Gibbons et al. 1963; Lee 1972; Sargent and Orkild 1973).

DESCRIPTION OF THE U12t TUNNEL

The U12t Tunnel complex consists of a main drift and side drifts, a substantial tailings pile fronting the tunnel portal, a series of discharge ponds downslope of the tailings pile, and two trailer parks and 16 drill holes on top of Aqueduct Mesa. It is one of a series of mined tunnels used for underground nuclear and high explosive tests on the east side of Rainier and Aqueduct Mesas. The U12t Tunnel was initiated by DTRA to meet its testing program requirements for DoD. DTRA also provided the criteria for the tunnel based on the large size and complexity of experiments they needed to conduct (DTRA 2002:381).

The U12 t Tunnel was composed of the main drift, nine primary side drifts, and numerous secondary bypass and reentry drifts (Figure 14). A total of 6.61 miles (10.64 km) were mined. Work at the tunnel began in the last months of 1967 (Ristvet et al. 2007), with mining of the main drift beginning on April 30, 1968 and completed by September 16, 1969 (Bennett 1991). Bearing was northwest and it measured 16 ft (4.9 m) wide, 19.5 ft (5.9 m) high, and 3,425 ft (1,044 m) long (Bennett 1991; Lee 1972:1). It was extended another 1,476 ft (450 m) in 1987 following the Mission Ghost test, the last nuclear weapons effects test in the tunnel (Bennett 1991; Townsend 2007; see Figure 14). An exploratory core hole for the U12t.10 drift was drilled from the end of the main drift extension into the middle of Aqueduct Mesa (see Figure 14). The core hole was 2,030 ft (619 m) in length and breached an underground aquifer under the mesa, that when discovered, made this particular part of the mesa, and tunnel, unsuitable for testing purposes (Townsend 2007). The amount of water initially released from the aquifer through the drill hole was approximately 500 gallons of water per minute, which decreased through time to 100 gallons per minute (Wayne Griffin 2008, personal communication). An earlier exploratory core hole 3,690 ft (1,125 m) in length for the U12t.03 drift and nearly parallel and south of the U12t.10 exploratory hole was fully grouted to stem the flow of water from this hole (see Figure 14). In 1993, as part of the mothball program for the tunnel, the Gas Seal Plug and the Gas Seal Door, normally used as containment plugs for underground tests, were closed and sealed to stop the discharge of water from the tunnel (DTRA 2003:7; Wayne Griffin 2008, personal communication).

Only six of the nine primary drifts were fully developed and used for testing. No tests were conducted in the U12t.05, U12t.06, and U12t.07 drifts. The U12t.10 drift was never mined. The last nuclear weapons effects test in the U12t Tunnel was in 1987 in the U12t.09 drift, with its operations ending in 1988. The first drifts in the tunnel were mined by the drill-and-blast technique, consisting of a series of horizontal holes about 10 ft (3 m) in length drilled into the rock face and filled with an explosive. The right amount of explosive to use for each hole or face was based on the skill and experience of the miners. After detonation, the resulting rock rubble was mucked out to the portal by way of muck cars and rails and deposited at the edge of the muck pile, the rail lines were extended further inward as mining progressed, and the process was repeated. The later drifts were mined using a road header machine that eliminated the need for drilling and blasting (Flangas and Harvey 2007; Townsend 2007). The road header machines used at the NTS were manufactured by the Voist-Alpine Company and were commonly referred to as Alpine Miners (Laurence Ashbaugh 2008, personal communication). The Alpine Miner used a rotary head at the end of an articulating arm to cut the

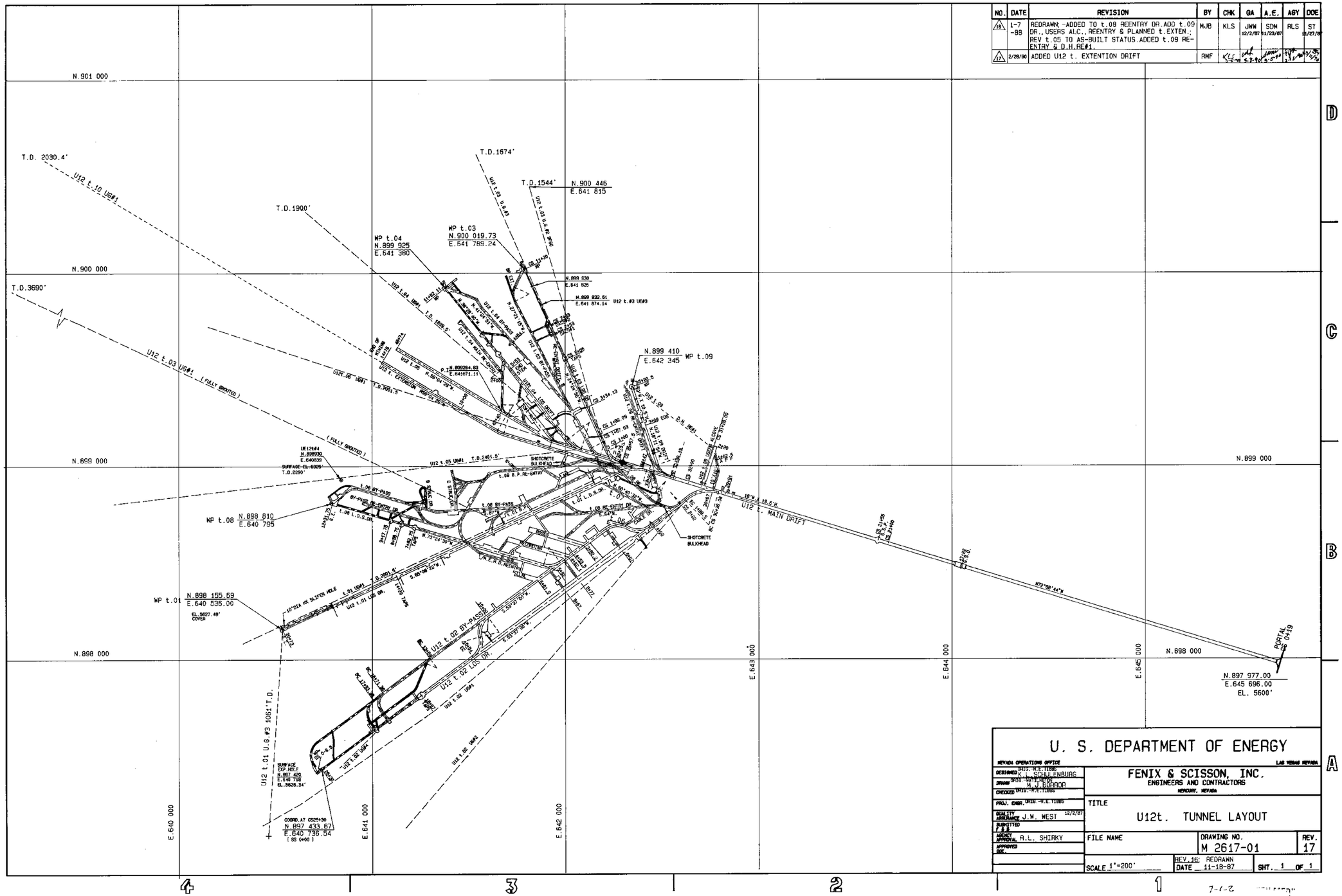

Figure 14. Drift plan of U12t Tunnel, 1990 (drawing M 2617-01.17, on file at the Archives and Records Center, Mercury).

rock, and thereby, was able to mine with greater precision and could better control the overbreak or residual rock of the opening in the drift face. The end product was a more uniform and smoother drift. The machine had a flat pan in front that was pushed into the rubble pile as the machine advanced. Two articulating arms mounted on the pan gathered the muck and moved it up and onto a conveyor. The conveyor carried the muck to the rear of the machine and dropped it into a train of mine cars that transported it to the portal.

The Portal Area defined for the U12t Tunnel has an irregular shape, somewhat rectangular east to west (Figures 2, 15-21). Approximate length east-west is 2,755 ft (840 m) and the width north-south is 855 ft (260 m). It encompasses 31.4 acres (12.7 hectares). UTM coordinates (NAD 27, Zone 11) roughly defining the limits of the Portal Area are provided below.

West End	E 573772	N 4118985
North Edge, Middle	E 574165	N 4119054
East End	E 574610	N 4119068
South Edge, Middle	E 574190	N 4118816

Six ponds, named the Mint Lakes, are located downslope and east of the portal talus deposit (Figures 13, 22). The upper portion of the first pond has been buried by the muck pile (DTRA 2003:7). The back edge of the last pond is approximately 1,260 ft (384 m) from the edge of the muck pile. All six ponds are unlined, have berms at their lower ends, and range from 80 to 160 ft (24 to 49 m) long and 50 to 170 ft (15 to 52 m) wide. They have been constructed on a thin alluvium veneer overlying bedrock. Depths of the ponds are unknown. The ponds were used for settling groundwater encountered during tunnel activities. The water was discharged from the tunnel through a pipe buried in the muck pile to the first pond and then to each successive pond by way of overflow pipes into small drainage channels between the ponds. Because water containment plugs were installed in the tunnel in 1993, discharge of groundwater from the tunnel into the ponds has not occurred since that date.

On top of Aqueduct Mesa are two trailer parks and 16 vertical holes associated with the U12t Tunnel (Figures 23-24, Table 1). Two distinct use areas are defined on the mesa, divided by a deep gorge or canyon (see Figure 2). Mesa Area 1 is at the edge of the mesa and just above the Portal Area, while Mesa Area 2 is inward and follows along a secondary road. Mesa Area 1 is teardrop in shape, spanning 3,920 ft (1,195 m) north-south and 2,215 ft (675 m) east-west, and encompasses 136 acres (55 hectares). The trailer parks and 13 of the drill holes are located in Mesa Area 1. The main trailer park was used only on the first three nuclear weapons effects tests (Figures 25-27). For the later tests, a fiber optic recording system replaced the outdated and less efficient recording cables to the mesa. The second, smaller trailer park, referred to as the Midas Myth/Milagro Trailer Park, was used only for the LANL Milagro experiments in the fourth test (Figures 28-29). This trailer park was positioned directly over the Milagro experiments that were located underground near ground zero. Mesa Area 2 is linear, following the road, about 164 ft (50 m) wide and 4,216 ft (1,285 m) in length, and includes 17 acres (7 hectares). Three of the drill holes are located in Mesa Area 2. Total area for

Figure 15. U12t Tunnel portal area, view north, 1972 (photograph CC-250-04, on file at the Defense Threat Reduction Information Analysis Center, Albuquerque).

Figure 16. U12t Tunnel portal area, view southeast, 1975 (photograph CP-057-04, on file at the Defense Threat Reduction Information Analysis Center, Albuquerque).

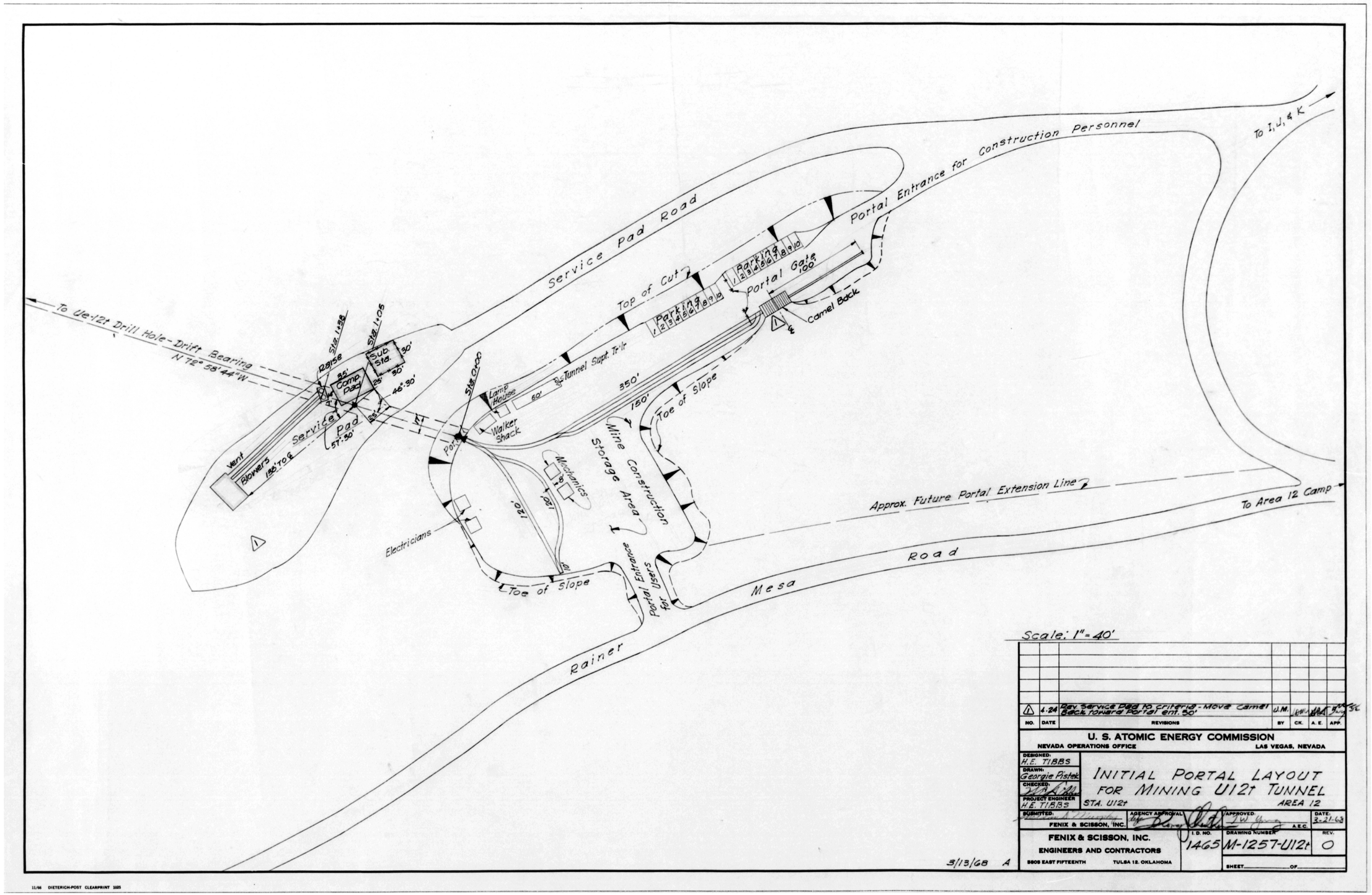

Figure 17. Plan of the initial U12t Tunnel portal area, 1968 (drawing M-1257-U12t, on file at the Archives and Records Center, Mercury).

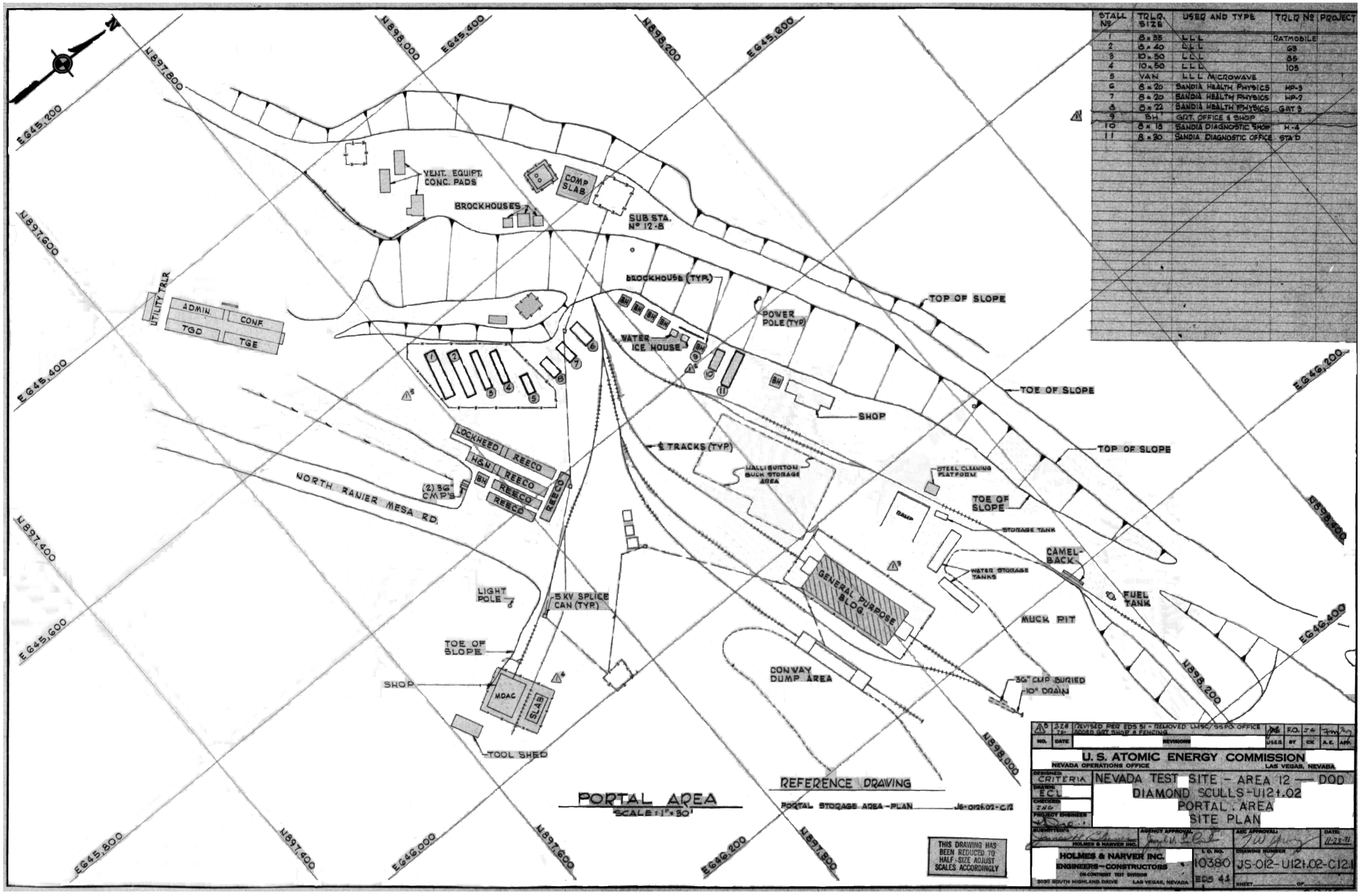

Figure 18. Plan of the U12t Tunnel portal area, 1972 (drawing JS-012-U12t.02-C12.1, on file at the Archives and Records Center, Mercury).

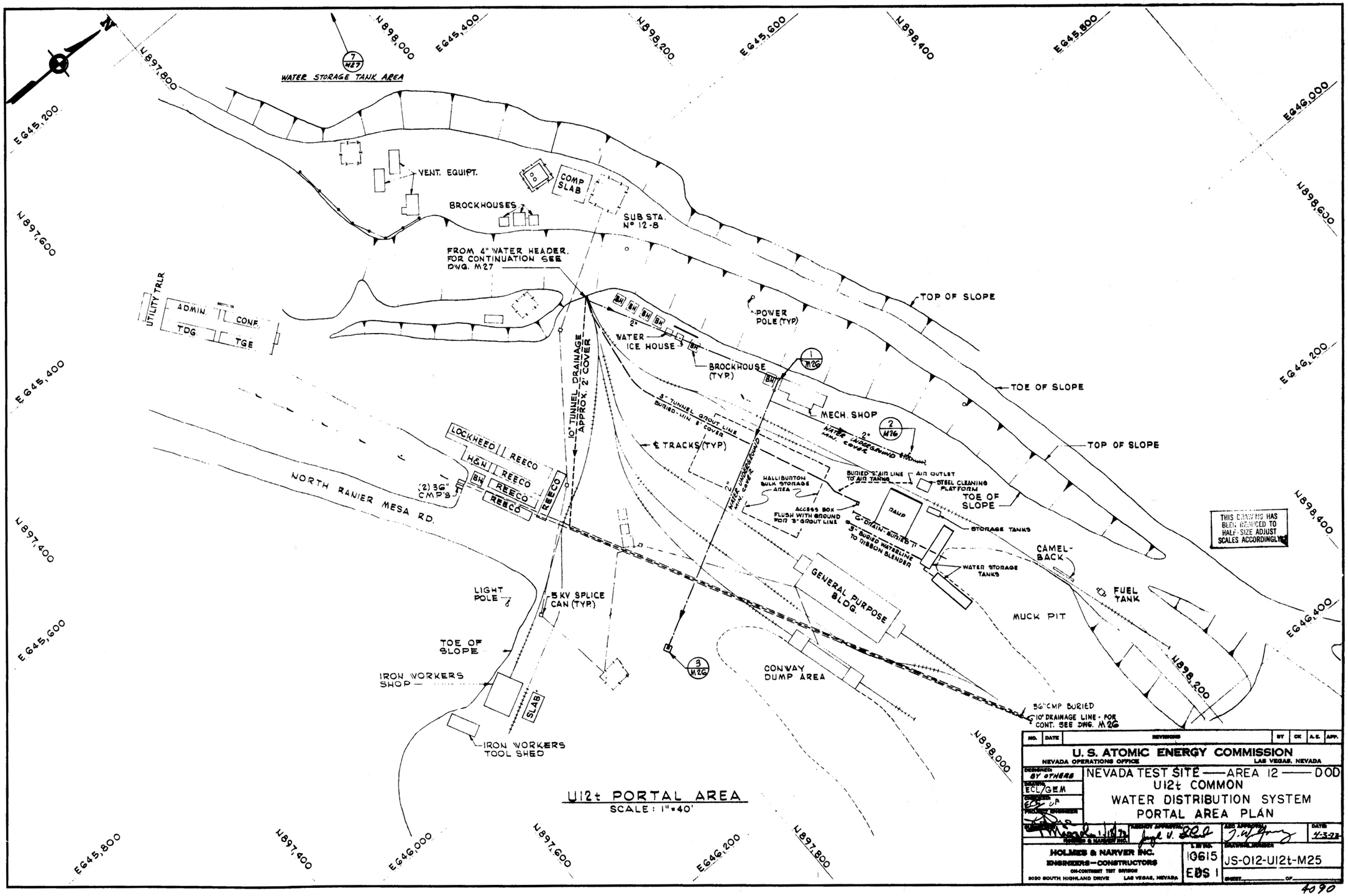

Figure 19. Plan of the U12t Tunnel portal area and water distribution system, 1972 (drawing JS-012-U12t-M25, on file at the Archives and Records Center, Mercury).

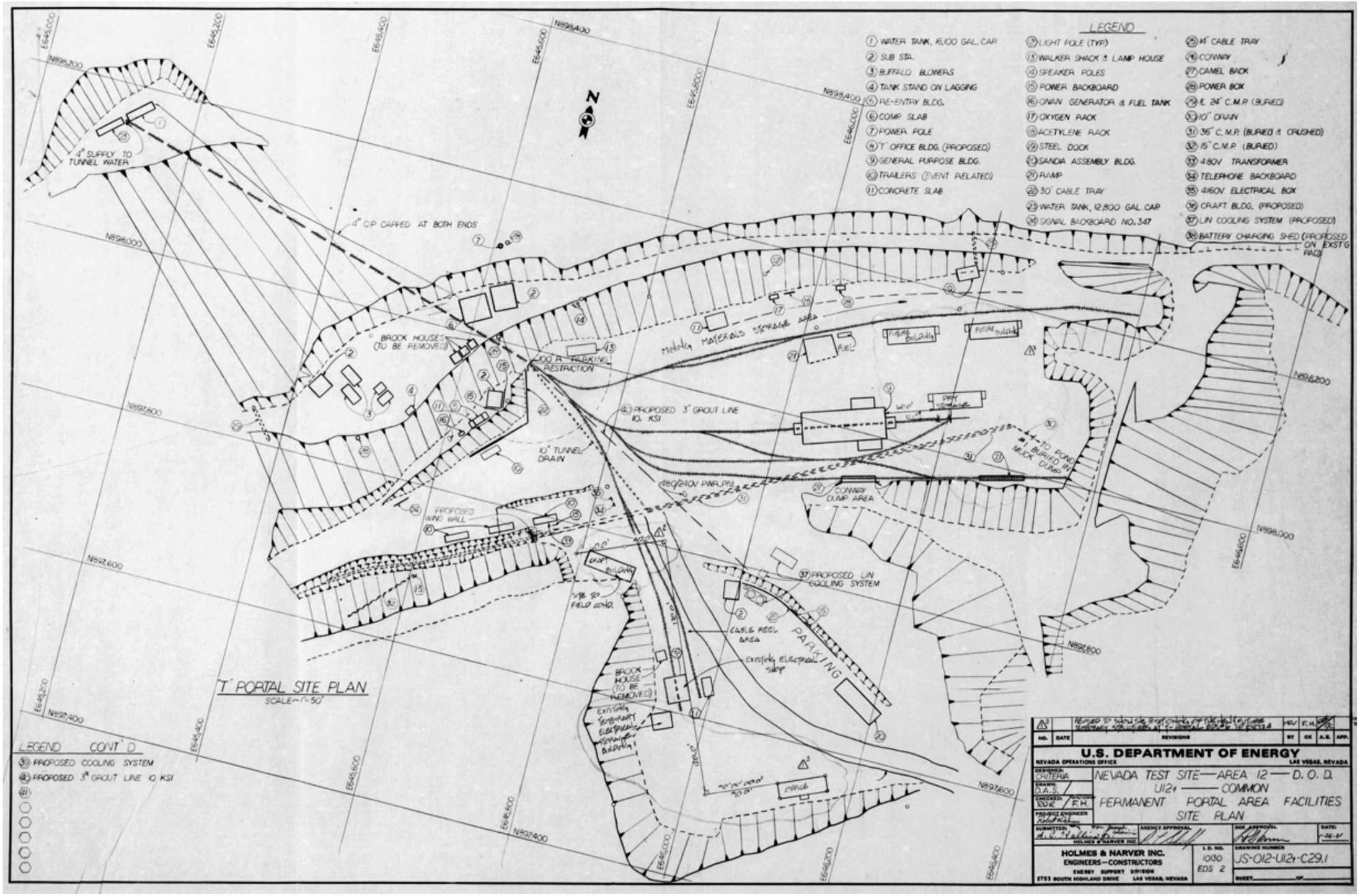

Figure 20. Plan of the U12t Tunnel portal area, 1981 (drawing JS-012-U12t-C29.1, on file at the Archives and Records Center, Mercury).

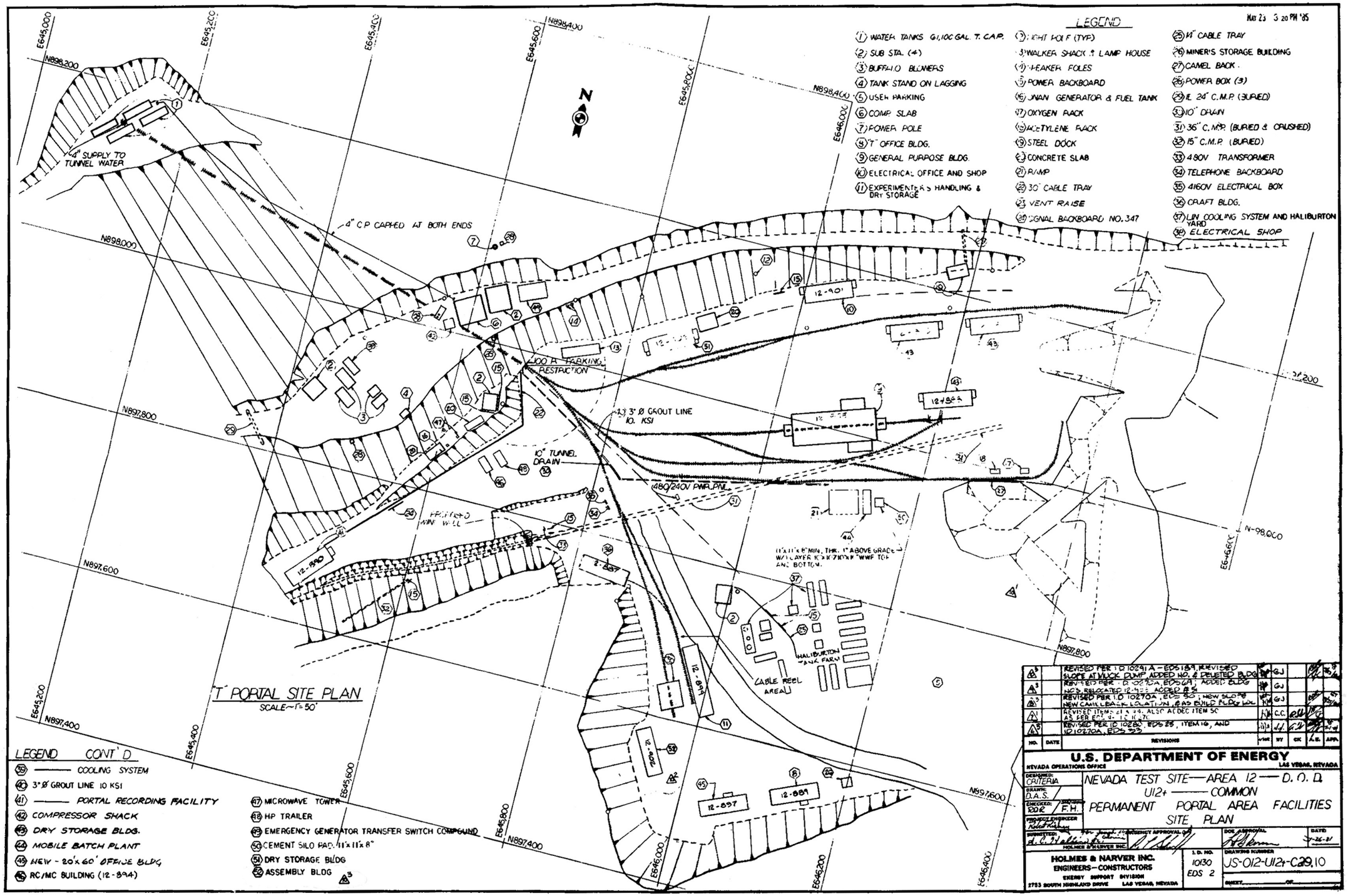

Figure 21. Plan of the U12t Tunnel portal area, 1984 (drawing JS-012-U12t-C29.10, on file at the Archives and Records Center, Mercury).

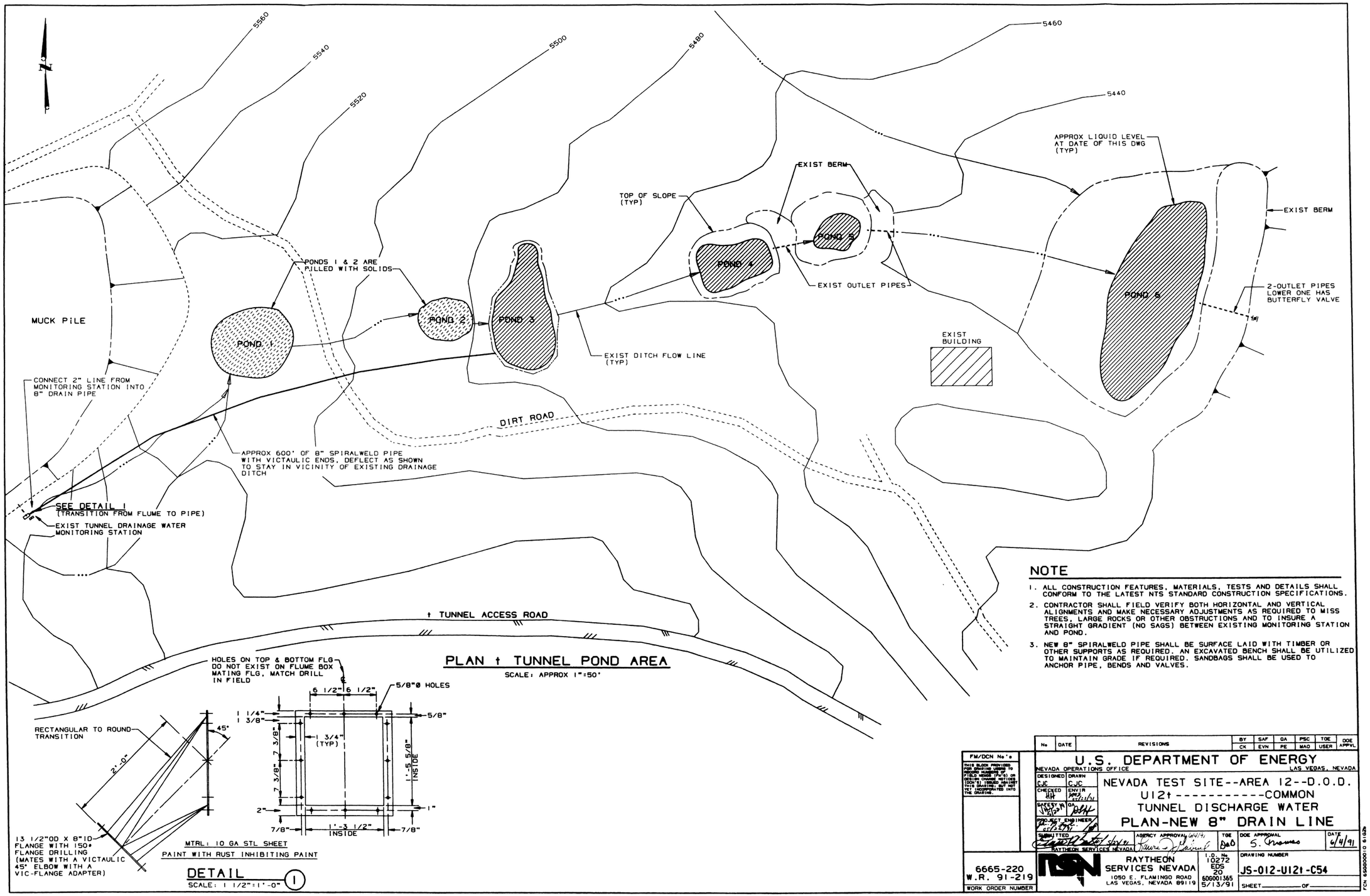

Figure 22. Plan of the retention ponds downslope of the portal and muck pile, 1991 (drawing JS-012-U12t-C54, on file at the Archives and Records Center, Mercury).

Figure 23. Aerial view of the U12t Tunnel mesa trailer park on Aqueduct Mesa, 1972 (photograph CC-263-07, on file at the Defense Threat Reduction Information Analysis Center, Albuquerque)

Figure 24. View northwest of the U12t Tunnel mesa trailer park, 1974. Shown are the cable splice building and cable trays, 1974 (photograph CP-001-03, on file at the Defense Threat Reduction Information Analysis Center, Albuquerque).

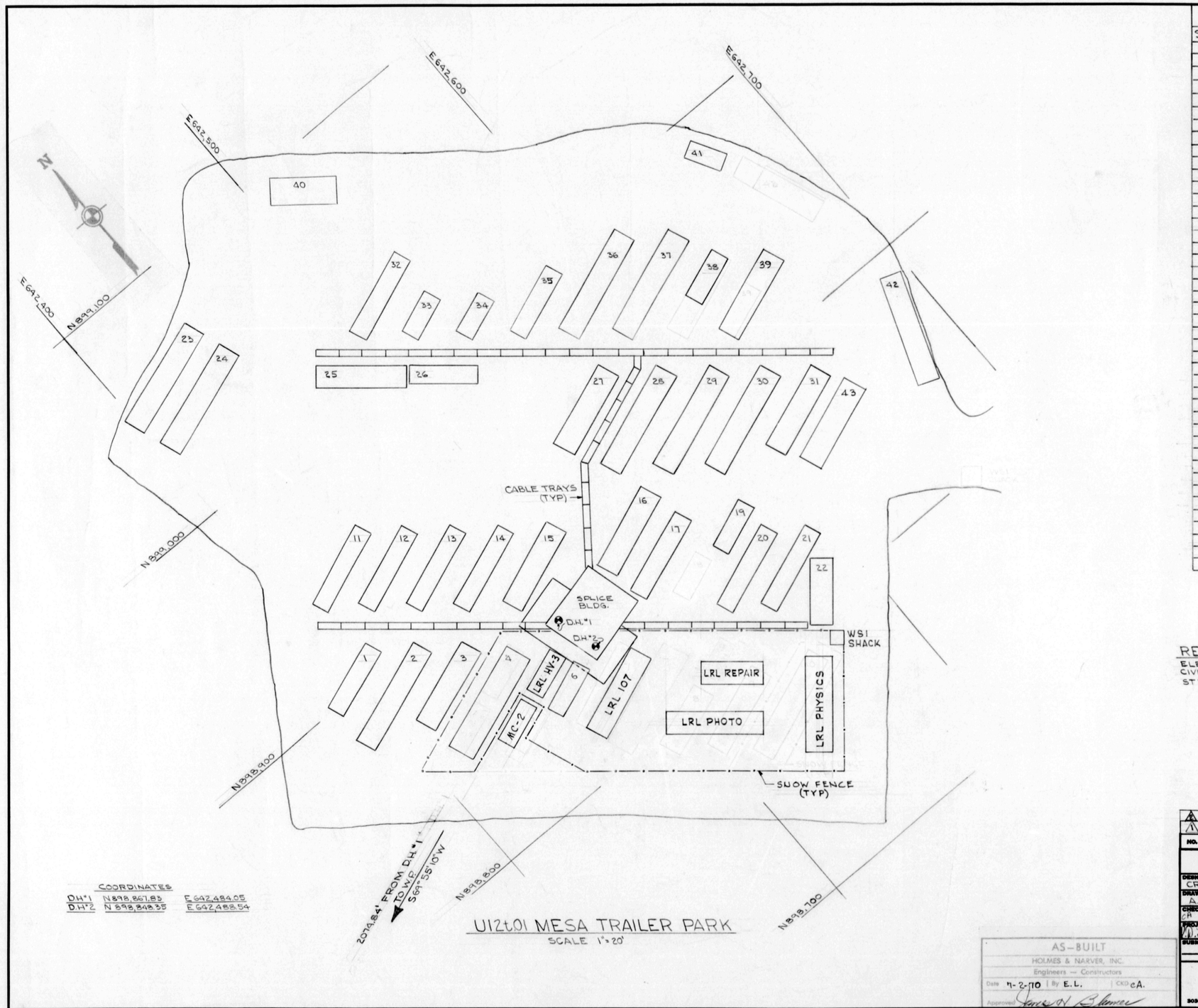

TRAILER SCHEDULE

SLOT	USER & PROJECT NO.	TRLR. NO.	SIZE
1	LMSC 9.70	33606	8x33
2	BTL-MDC 8.11	50017	10x50
3	LMSC-NRL 8.22/8.25	40014	10x40
4	LRL - 8.52	86	12x50
5	LRL HI-VOLT - 8.52		8x24
6	EGG T&F 8.52		8x24
8	LRL - REPAIR 8.52		10x30
9	LRL - PHOTO 8.52		10x40
10	LRL - PHYSICS 8.52		10x50
11	S.C. 8.71/8.72	B-38	8x40
12	S.C. 8.71/8.72	B-50	8x40
13	S.C. 8.71/8.72	B-52	8x40
14	S.C. 8.71/8.72	B-23	8x40
15	S.C. 8.71/8.72	B-68	10x40
16	L.R.L. 8.51	40009	10x40
17	L.R.L. 8.51	45	8x40
19	L.R.L. 8.51	168	8x24
20	L.R.L. 8.51	71	8x40
21	L.R.L. 8.51	102	8x40
22	L.R.L. - SUPPORT 8.51	25175	10x30
23	S.C. 8.71/8.72	STA-C	10x50
24	S.C. 8.71/8.72	STA-T	10x50
25	S.C. 8.71/8.72	B-70	10x40
26	S.C. 8.71/8.72	C-4	8x30
27	S.C. 8.71/8.72	B-63	10x40
28	S.R.I. 8.21	50031	10x50
29	P.I. - A.F.R.P.L. 9.62/8.81	50024	10x50
30	P.I. 9.62	50025	10x50
31	G.G.A 9.64	40003	10x40
32	E.G.G. - PHOTO VAN	7D8514	8x40
33	AFWL 8.84	20032	10x20
34	KN-SAFSCOM 8.13	20034	10x20
35	KN-SAFSCOM-PA-AWFL 8.12/8.13/8.84	33019	8x33
36	KN-SAFSCOM-PA-AWFL 8.12/8.13/8.84	50020	10x50
37	KN-SAFSCOM 8.13	50030	10x50
39	ETI 8.92	40013	10x40
38	MIT	M119	8x23
40	REECO		
41	REECO		
42	DOD 18.21	2330-16012-01	10x50
43	BENDIX MAINT.	40502	10x40

REFERENCE DRAWINGS

ELECTRICAL E 20
CIVIL - U12t C 4
STRUCT. S13, 20 & 21

INDEX CODE							
AREA	BLDG — STA	CLASS	TYPE	A.&E.	SHT. NO.	USER	
12	U12T-01.37	04	001	C16.2		04	

NO.	DATE	REVISIONS	BY	CK	A.E.	APP.
2	7-2-70	AS BUILT REVD. ENTIRE DWG.	EL	CA		
1	11-9-70	UPDATE TRLR. PARK PER EDS 59	AV			

U. S. ATOMIC ENERGY COMMISSION
NEVADA OPERATIONS OFFICE — LAS VEGAS, NEVADA

DESIGNED: CRITERIA
DRAWN: A. VANYO
CHECKED: CA
PROJECT ENGINEER

NEVADA TEST SITE — AREA 12 — DOD
MINT LEAF — U12t01
MESA TRAILER PARK
PLAN

SUBMITTED: HOLMES & NARVER INC.
AGENCY APPROVAL
A.E.C. APPROVAL
DATE

HOLMES & NARVER INC.
ENGINEERS—CONSTRUCTORS
ON-CONTINENT TEST DIVISION
3030 SOUTH HIGHLAND DRIVE LAS VEGAS, NEVADA

I. D. NO. 10168 EDS 9

DRAWING NUMBER JS-012—U12t01-C16.2

SHEET ____ OF ____

Figure 25. Plan of the U12t Tunnel mesa trailer park for the Mint Leaf test, 1970 (drawing JS-012-U12t.01-C16.2, on file at the Archives and Records Center, Mercury).

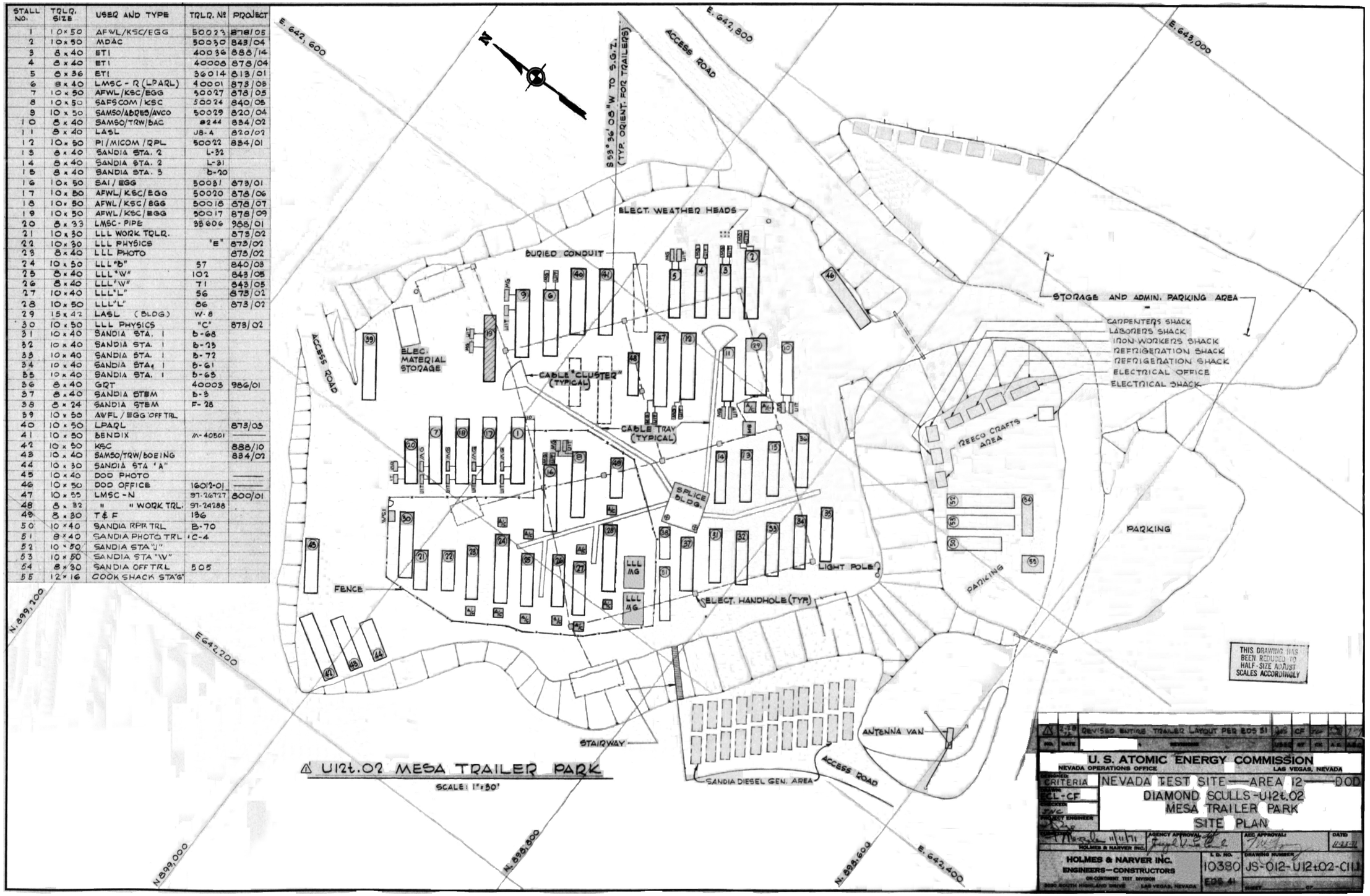

STALL NO.	TRLR. SIZE	USER AND TYPE	TRLR. Nº	PROJECT
1	10 × 50	AFWL/KSC/EGG	50023	878/05
2	10 × 50	MDAC	50030	843/04
3	8 × 40	ETI	40036	888/14
4	8 × 40	ETI	40008	878/04
5	8 × 36	ETI	36014	813/01
6	8 × 40	LMSC - R (LPARL)	40001	873/03
7	10 × 50	AFWL/KSC/EGG	50027	878/05
8	10 × 50	SAFSCOM/KSC	50024	840/05
9	10 × 50	SAMSO/ABRES/AVCO	50029	820/04
10	8 × 40	SAMSO/TRW/BAC	#244	834/02
11	8 × 40	LASL	UB-4	820/02
12	10 × 50	PI/MICOM/RPL	50022	834/01
13	8 × 40	SANDIA STA. 2	L-32	
14	8 × 40	SANDIA STA. 2	L-31	
15	8 × 40	SANDIA STA. 3	b-20	
16	10 × 50	SAI/EGG	50031	873/01
17	10 × 50	AFWL/KSC/EGG	50020	878/06
18	10 × 50	AFWL/KSC/EGG	50018	878/07
19	10 × 50	AFWL/KSC/EGG	50017	878/09
20	8 × 33	LMSC - PIPE	35606	988/01
21	10 × 30	LLL WORK TRLR.		873/02
22	10 × 30	LLL PHYSICS	"E"	873/02
23	8 × 40	LLL PHOTO		873/02
24	10 × 50	LLL "B"	57	840/03
25	8 × 40	LLL "W"	102	843/05
26	8 × 40	LLL "W"	71	843/05
27	10 × 40	LLL "L"	56	873/02
28	10 × 50	LLL "L"	86	873/02
29	15 × 42	LASL (BLDG)	W-8	
30	10 × 50	LLL PHYSICS	"C"	873/02
31	10 × 40	SANDIA STA. 1	b-68	
32	10 × 40	SANDIA STA. 1	b-73	
33	10 × 40	SANDIA STA. 1	b-72	
34	10 × 40	SANDIA STA. 1	b-61	
35	10 × 40	SANDIA STA. 1	b-63	
36	8 × 40	GRT	40003	986/01
37	8 × 40	SANDIA STBM	b-3	
38	8 × 24	SANDIA STBM	F-28	
39	10 × 50	AWFL/EGG OFF TRL		
40	10 × 50	LPARL		873/03
41	10 × 50	BENDIX	M-40501	——
42	10 × 50	KSC		888/10
43	10 × 40	SAMSO/TRW/BOEING		834/02
44	10 × 30	SANDIA STA "A"		
45	10 × 40	DOD PHOTO		——
46	10 × 50	DOD OFFICE	16012-01	——
47	10 × 55	LMSC - N	97-26727	800/01
48	8 × 32	" " WORK TRL.	97-24288	
49	8 × 30	T & F	136	
50	10 × 40	SANDIA RPR. TRL	B-70	
51	8 × 40	SANDIA PHOTO TRL	1C-4	
52	10 × 50	SANDIA STA "J"		
53	10 × 50	SANDIA STA "W"		
54	8 × 30	SANDIA OFF TRL	505	
55	12 × 16	COOK SHACK STA "G"		

Figure 26. Plan of the U12t Tunnel mesa trailer park for the Diamond Sculls test, 1972 (drawing JS-012-U12t.02-C11, on file at the Archives and Records Center, Mercury).

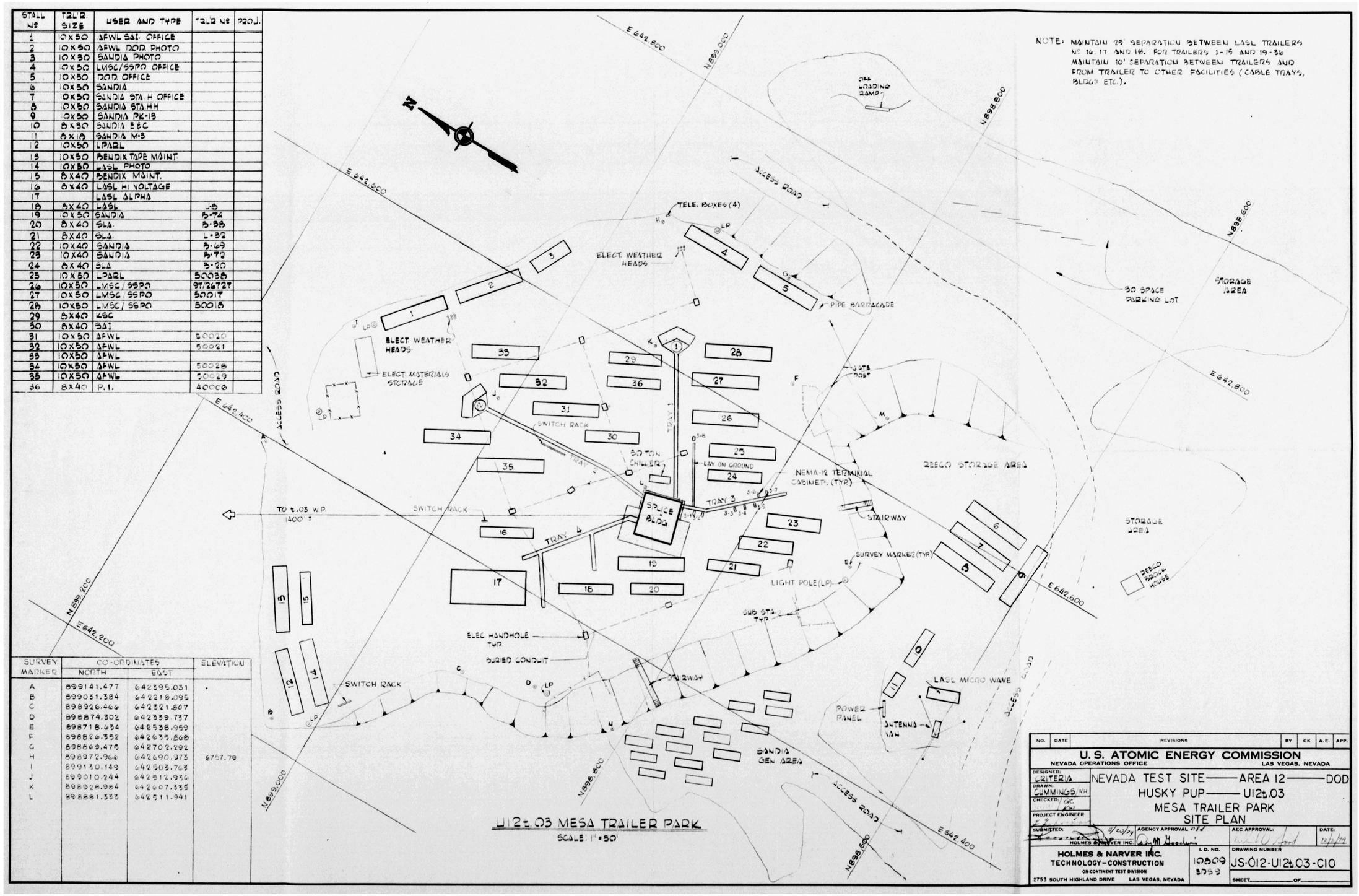

STALL Nº	TRL'R. SIZE	USER AND TYPE	TRL'R Nº	PROJ.
1	10x50	AFWL SAI. OFFICE		
2	10x50	AFWL DOD PHOTO		
3	10x30	SANDIA PHOTO		
4	10x50	LMSC/SSPO OFFICE		
5	10x50	DOD OFFICE		
6	10x50	SANDIA		
7	10x50	SANDIA STA. H OFFICE		
8	10x50	SANDIA STA. H.H		
9	10x50	SANDIA PK-13		
10	8x30	SANDIA E&C		
11	8x18	SANDIA M-3		
12	10x50	LPARL		
13	10x50	BENDIX TAPE MAINT		
14	10x50	LASL PHOTO		
15	8x40	BENDIX MAINT.		
16	8x40	LASL HI VOLTAGE		
17		LASL ALPHA		
18	8x40	LASL	L-8	
19	10x50	SANDIA	S-74	
20	8x40	SLA.	S-38	
21	8x40	SLA.	L-32	
22	10x40	SANDIA	S-69	
23	10x40	SANDIA	S-72	
24	8x40	SLA	S-20	
25	10x50	LPARL	50038	
26	10x50	LMSC/SSPO	97/26727	
27	10x50	LMSC SSPO	50017	
28	10x50	LMSC/SSPO	50018	
29	8x40	ZSC		
30	8x40	SAI		
31	10x50	AFWL	50020	
32	10x50	AFWL	50021	
33	10x50	AFWL		
34	10x50	AFWL	50028	
35	10x50	AFWL	50029	
36	8x40	P.I.	40006	

SURVEY MARKER	CO-ORDINATES NORTH	CO-ORDINATES EAST	ELEVATION
A	899141.477	642395.031	
B	899051.384	642218.095	
C	898926.466	642321.807	
D	898874.302	642339.737	
E	898718.634	642538.959	
F	898826.352	642635.868	
G	898869.475	642702.292	
H	898972.966	642690.973	6757.79
I	899130.149	642503.763	
J	899010.244	642512.936	
K	898928.984	642607.535	
L	898881.533	642511.941	

Figure 27. Plan of the U12t Tunnel mesa trailer park for the Husky Pup test, 1974 (drawing JS-012-U12t.03-C10, on file at the Archives and Records Center, Mercury).

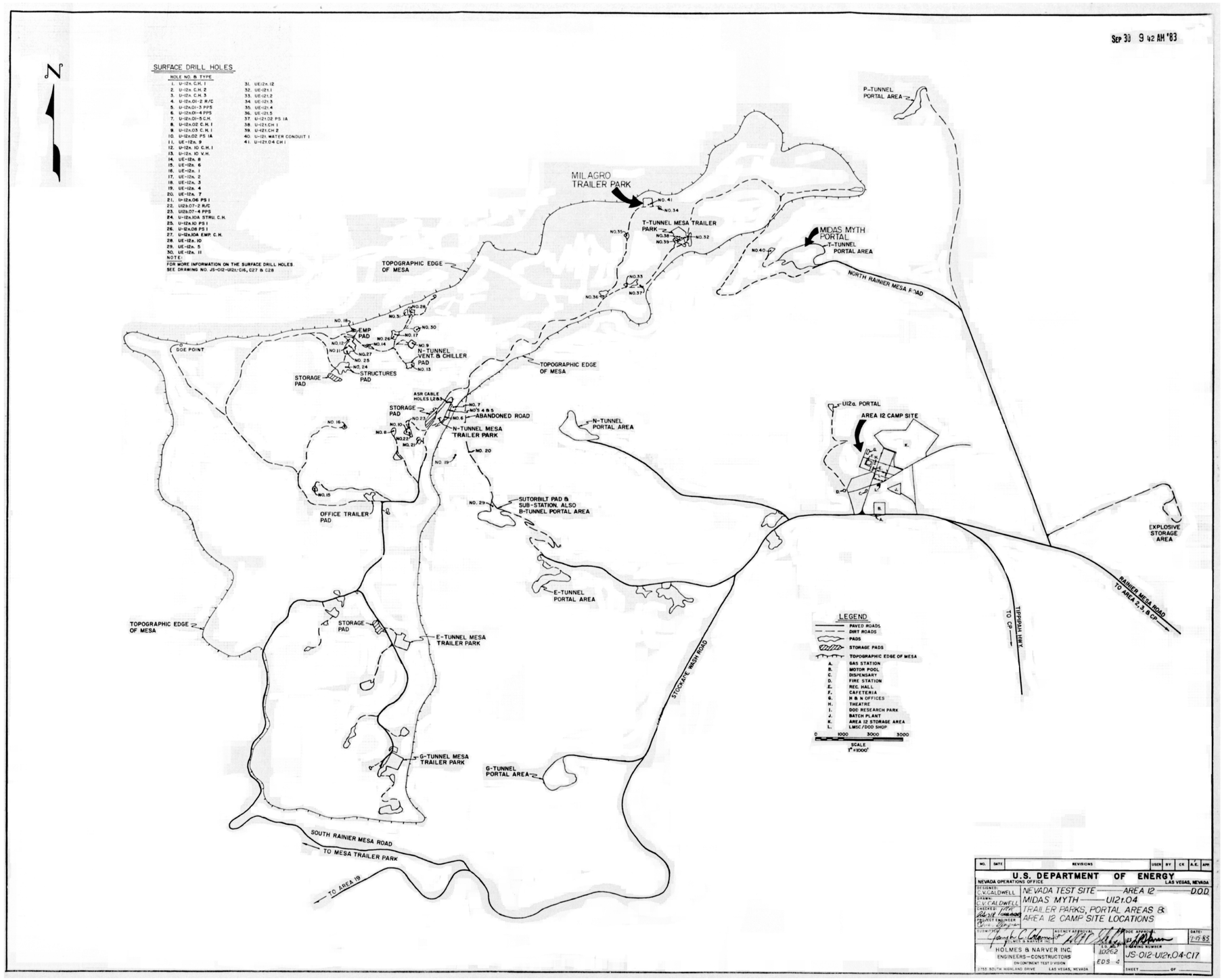

Figure 28. Map of Area 12 showing locations of drill holes, roads, trailer parks, and portal areas during the Midas Myth test, 1983 (drawing JS-012-U12t.04-C17, on file at the Archives and Records Center, Mercury).

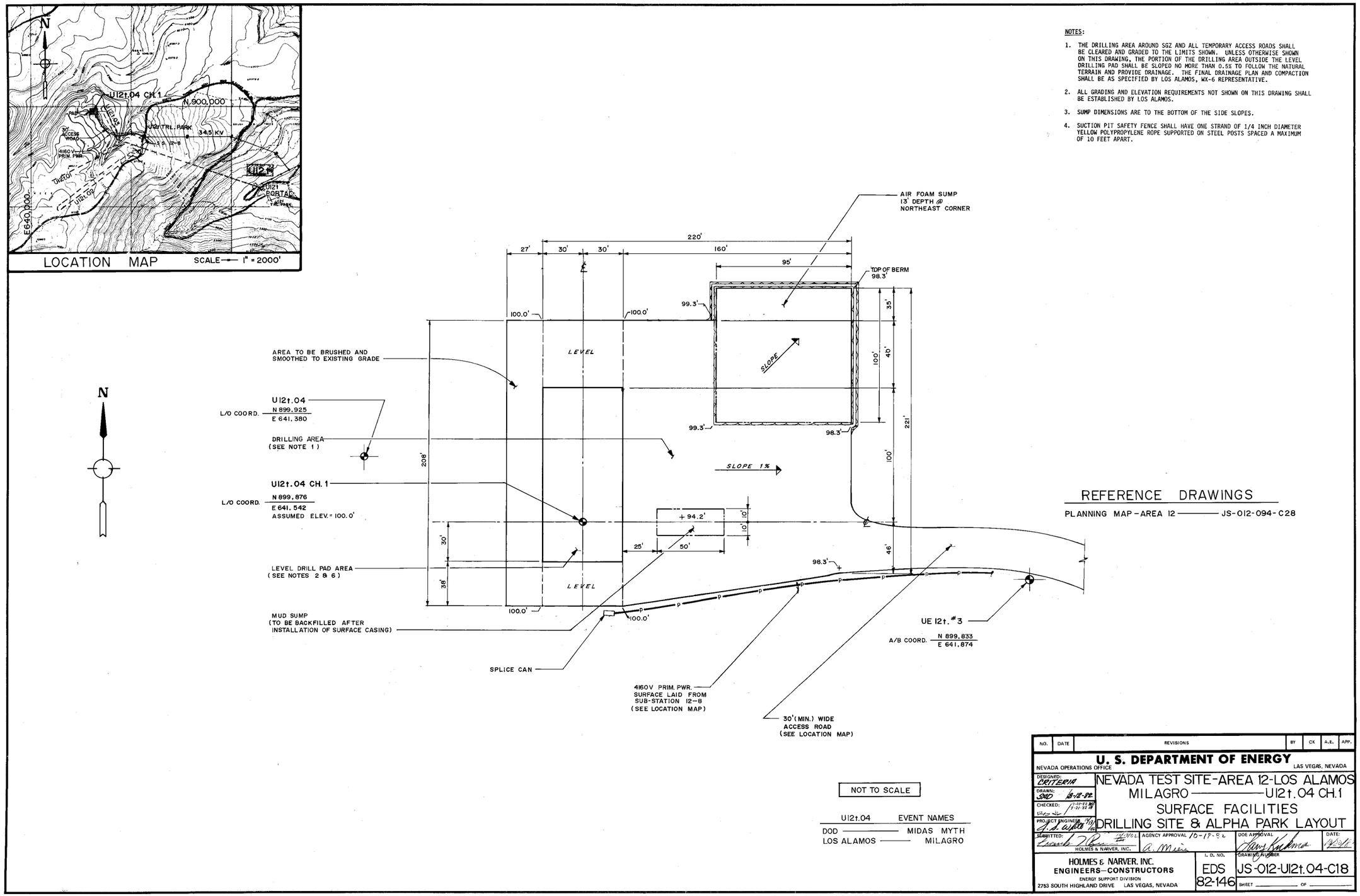

Figure 29. Plan of the Milagro cable hole drill pad, 1982 (drawing JS-012-U12t.04-C18, on file at the Archives and Records Center, Mercury).

Table 1. U12t Tunnel Aqueduct Mesa Drill Holes, UTM Coordinates, and Depth.*

1	UE-12t #1 Exploratory	N 4119246	E 573002	2,262 ft (689 m)
2	UE-12t #2 Exploratory	N 4118774	E 572461	1,684 ft (513 m)
3	UE-12t #3 Exploratory	N 4119514	E 572804	2,176 ft (663 m)
4	UE-12t #4 Exploratory	N 4119238	E 572490	2,290 ft (698 m)
5	UE-12t #5 Exploratory	N 4118655	E 572295	1,611 ft (491 m)
6	UE-12t #6 Exploratory	N 4119989	E 571754	1,461 ft (445 m)
7	UE-12t #7 Exploratory	N 4120450	E 572584	1,692 ft (516 m)
8	UE-12t #8 Exploratory	N 4120794	E 573085	1,058 ft (322 m)
9	U12t.02 Postshot #1A	N 4118766	E 572614	1,643 ft (501 m)
10	U12t.04 Pre-Postshot #1D (abandoned)	N 4119543	E 572735	7 ft (2 m)
11	U12t.04 Pre-Postshot #2D (abandoned)	N 4119548	E 572745	8 ft (2 m)
12	U12t.04 Cable Hole #1	N 4119527	E 572703	1,187 ft (362 m)
13	U12t.09 Postshot #1A	N 4119275	E 572992	1,088 ft (332 m)
14	U12t.09 Postshot #1AA	N 4119275	E 572992	1,131 ft (345 m)
15	U12t Cable Hole #1	N 4119221	E 572991	1,180 ft (360 m)
16	U12t Cable Hole #2	N 4119215	E 572993	1,175 ft (358 m)

* Data obtained from Bennett (1991); UTM coordinates are NAD27 and Zone 11.

the Mesa Area is 153.5 acres (62 hectares). UTM coordinates (NAD 27, Zone 11) roughly outlining the two mesa areas are provided below.

Area 1		
North Edge	N 4119575	E 572890
East Edge	N 4119055	E 573060
South Edge	N 4118615	E 572290
West Edge	N 4119210	E 572410
Area 2		
Southwest End	N 4119970	E 571710
Northeast End	N 4120825	E 573115

Drill holes on top of Aqueduct Mesa associated with the U12t Tunnel listed in Table 1 include exploratory, postshot, and cable holes (Bennett 1991). Most of them are exploratory, about 4 inches (10 cm) in diameter. There are three postshot and two pre-postshot drill holes, with the pre-postshot holes being abandoned after only 7 and 8 ft (2.1 and 2.4 m) in depth, respectively. Two of the postshot holes are in the same drill hole, with one about 10 inches (25 cm) in diameter and the second about 6 inches (15 cm) in diameter. The third postshot hole is also about 10 inches in

diameter. The three cable holes are all approximately the same depth. Two of the cable holes in the main trailer park are 36 inches (91 cm) in diameter the entire depth, whereas the third one, the U12t.04 cable hole in the Milagro trailer park, starts out at 48 inches (122 cm) in diameter to a depth of 60 ft (18 m) and then reverts to a 36 inch diameter the rest of the way.

Geomorphology of the Portal Area

The geomorphic study area for this historical evaluation covers about 1,020 acres (412 hectares) in and around the Portal Area. The geomorphic study area is contained in an east-west trending polygon about 9,600 ft (2,900 m) long and 4,600 ft (1,400 m) at the widest point. The U12t Portal is near the center of the polygon and approximately 20 ft (6 m) above the former axial valley floor. Numerous modifications to the valley floor were made to accommodate the access road and control runoff. The access road leading to areas above the portal and the slope of Aqueduct Mesa traverses artificial fill, hillslope colluvium, and bedrock units that consist primarily of bedded Tertiary ash-fall and ash-flow tuff of the Paintbrush Tuff (Ta2 of Frizzell and Schulters 1990; Tb of Sargent and Orkild 1973; Survey Butte - Tps of Gibbons et al. 1963); Belted Range Tuff (Tba of Frizzell and Schulters 1990; Tba of Sargent and Orkild 1973; Upper and Lower Grouse Canyon members of Indian Trail Formation of Gibbons et al. 1963); and the Timber Mountain Tuff (Ammonia Tanks Tuff – Tma; and welded tuffs of the Rainier Mesa Member – Tmr of Frizzell and Schulters 1990).

Geomorphic Mapping of the Portal Area

The bedrock and surficial geology of the U12t Tunnel area was mapped in the field and later compiled as a digital map (Figure 30). The mapping also included the types and extent of surface modification that likely occurred during development of and operations at the U12t Tunnel system including road building and construction of infrastructure. The geologic mapping was conducted to provide context for interpreting the general degree of surface disturbance. Table 2 provides the map unit descriptions.

Historic Deposits and Modifications to the Landscape

The historic deposits and modifications to the landscape represent the principal landscape modifications that occurred in association with 1) road building, including drainage ditches (Ad), bladed areas (Ab), cut slopes (Acs), and road side-cast (Ars), 2) use of mine tailings as fill (Af) in construction of building pads, road widening, road turnouts, retention pond dams, and benched fill for staging areas and slopes associated with large fill areas (Afs), 3) disposal of mine tailings (muck) on slopes during tunnel development (At), and 4) construction of retention ponds (Ap). Subsequent erosion of tailings (Ate) and severely gullied tailings (Atg) and associated small alluvial fans formed on terraced tailings (Aaf) are mapped as discrete units. Roads and ramps (road) are included as separate units of historic deposits and modifications. Figure 30 shows the distribution of many of these map units in the U12t Portal Area.

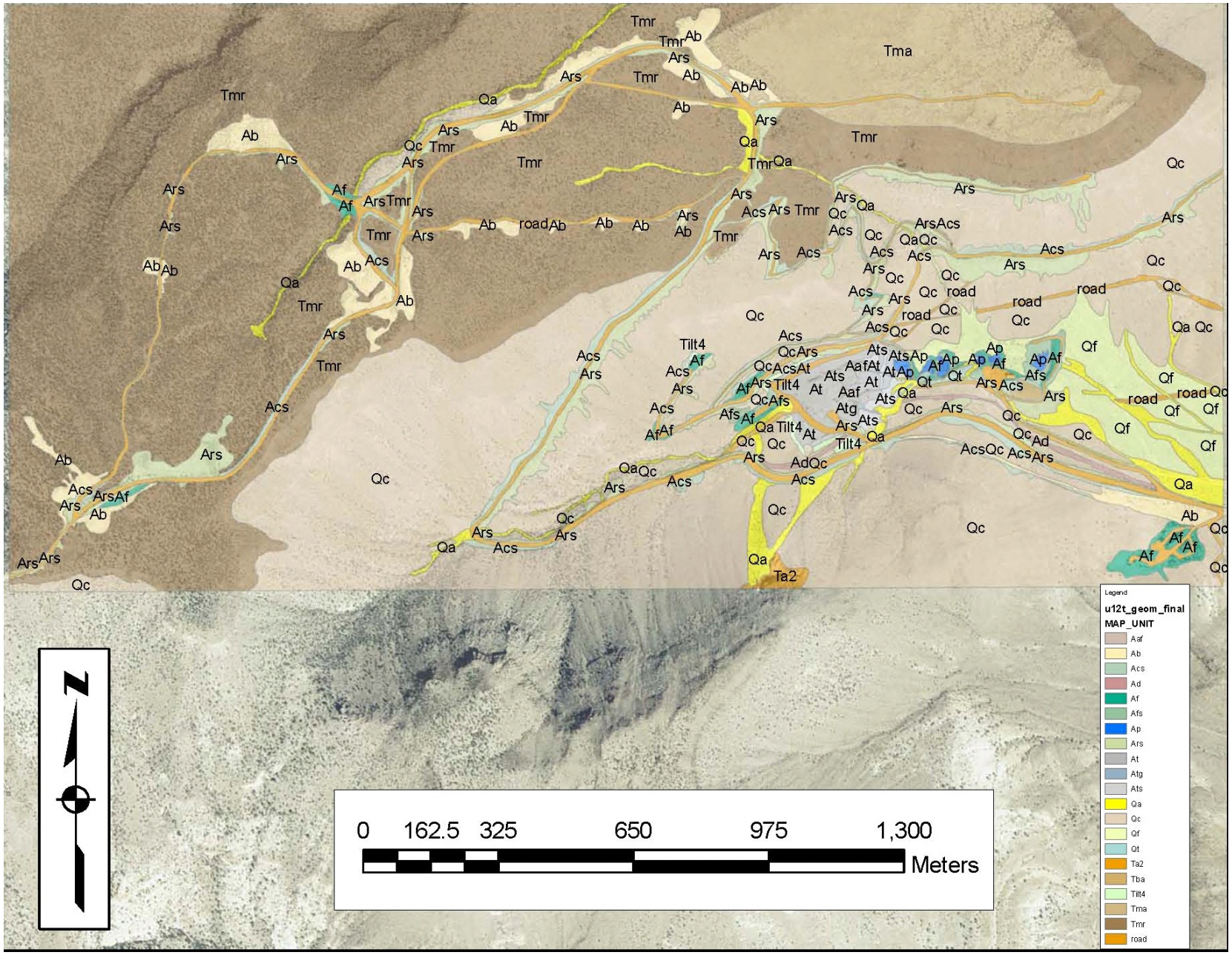

Figure 30. Surficial geologic map for the U12t Tunnel complex. Shown are bedrock outcrop, surficial deposits, and areas disturbed during development of the tunnel system.

Table 2. Legend for Surficial Geologic Map of the Portal Area.

MAP SYMBOL	MAP UNIT	DESCRIPTION
Aaf	Alluvial fans on artificial fill	Small alluvial fans formed on or adjacent to tailings comprised of sediment derived from incision and erosion of tailings.
Ab	Bladed area	Areas characterized by shallow blading and/or removal of colluvium and thin surface mantle; commonly results in bedrock surfaces.
Acs	Artificial cut slope	Slopes cut in bedrock or colluvium during road construction.
Af	Artificial fill	Mechanically placed fill derived primarily from tunnel development.
Afs	Artificial fill slope	Slopes formed adjacent to artificial fill, such as building pads, drill pads, etc.
Ap	Artificial pond	Shallow holding ponds to capture surface runoff; more recently used to retain water draining from U12t main tunnel.
Ars	Road side-cast	Material that has spilled down slopes as a result of road grading and fill emplacement.
At	Tailings	Mine waste dumped on hill slopes; stable tailings vegetated.
Ate	Eroded tailings	Tailings with defined networks of gullies, rills, and small channels; largely unvegetated.
Atg	Gully	Deep, wide gullies formed on unvegetated tailings.
Road	Road	Principal access roads for the U12t Tunnel complex.
Qa	Alluvium	Late Holocene deposits associated with ephemeral stream channels.
Qc	Colluvium	Late Holocene mantle of bedrock derived colluvium and weathered surficial mantle.
Qf	Alluvial fan	Late Holocene alluvial fans and principal feeder channels found on the south facing slopes east of the U12t Tunnel complex and in the valley floor down valley from the artificial ponds.
Qt	Terrace	Holocene fluvial terrace situated above active floodplain.

Continued

Table 2. Continued.

MAP SYMBOL	MAP UNIT	DESCRIPTION
Tma	Ammonia Tanks	Pliocene; gray, buff, and pink partially welded rhyolite ash-flow tuff member of the Timber Mountain Tuff.
Tmr	Rainier Mesa Member	Pliocene; pale-red to dark-brown nonwelded to densely welded rhyolite ash-flow tuff member of the Timber Mountain Tuff.
Ta2	Ash Fall Tuff	Massive to bedded, reworked ash-fall tuff member of the Timber Mountain Tuff
Tba	Ash-Fall Tuff	Massive to well-bedded ash-fall and tuffaceous sandstone member of the Belted Range Tuff (Indian Trail Formation).
Tilt4	Tunnel Bed 4	Miocene; pale gray and red bedded peralkaline ash-fall tuff and tuffaceous sandstone subunits 4G, 4H, 4J, and 4K of the Lower Member of the Indian Trail Formation.

Cut slopes (Acs) are formed principally during road construction and maintenance activities and during excavations for buildings. The cut slopes are commonly associated with small colluvial wedges of loose rock and soil shed from the cut slope, and in some cases small fans that have spread across roads and staging areas (Figures 31-33). In the U12t Tunnel area, cut slopes are associated with access road preparation, along the valley margins on the main tunnel portal level in the equipment staging and storage areas, and on access roads to the mesa top. In general, large volumes of friable bedrock and colluvium may be removed depending on road alignment. Road cuts may be many meters tall where road alignment and topography require significant excavation into a hillslope. The material excavated from cut slopes is commonly used in road construction activities, especially to fill low parts of the road bed or to raise the elevation of the road bed. As the roadbed is constructed, material is bladed to the edge of the roadbed and often spills onto adjacent hillslopes. In the U12t Tunnel area, cut slopes are generally less than 6.6 ft (2 m) high and occupy about 15 acres (6 hectares) or less than 2 percent of the geomorphic study area. Near the U12t Tunnel portal, bedrock cut slopes are as much as 16 ft (5 m) high, but are relatively stable. Cut slopes in colluvium are generally steep, unvegetated, and shed material onto the road and fill area. In some places near the portals, protective mesh and shockcrete were installed to reduce the hazard of rock fall. Smaller cut slopes in colluvium where access roads are cut into hillslopes tend to shed sediment into roadside ditches. Material shed into ditches restrict drainage and can result in gullies forming on the road bed.

Artificial fill (Af) deposits cover about 10 acres (4 hectares) or about 1 percent of the map area and constitute significant volumes of material, which in terms of geomorphic process is essentially in

Figure 31. View west of cut slopes (Acs) in thick colluvium and bedrock in the portal area. Road side-cast is shown (Ars). Coarse bouldery colluvium (Qc) covers bedrock slopes of Aqueduct Mesa.

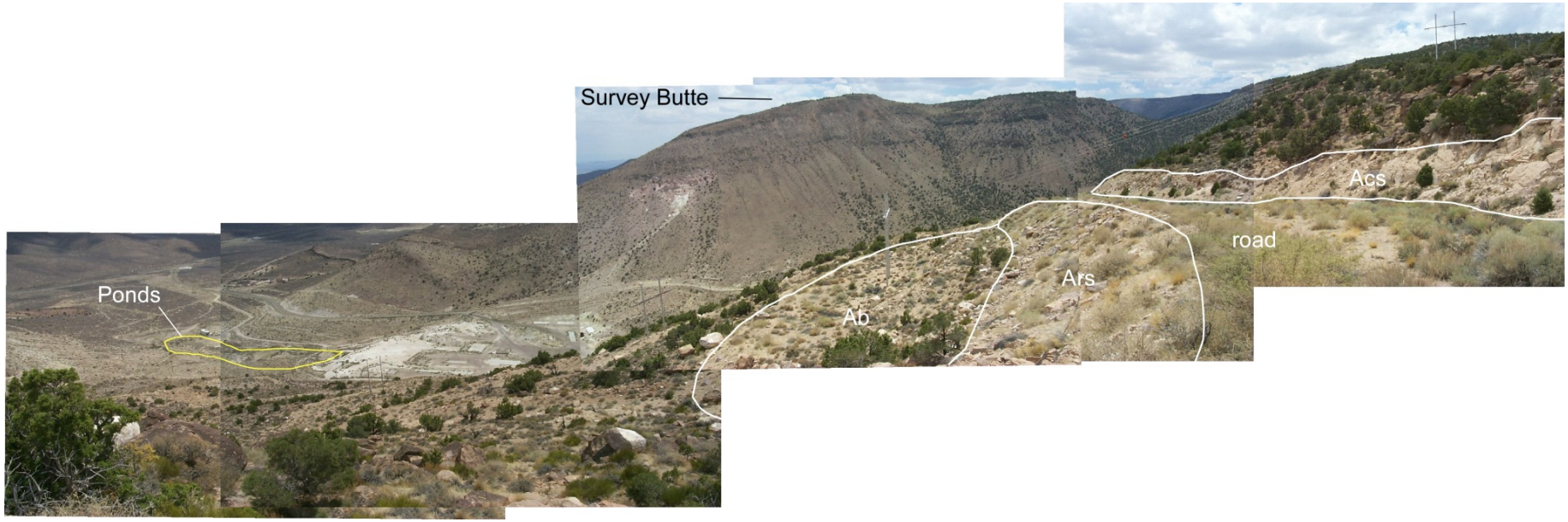

Figure 32. Panorama view to the south of the portal area. Shown are cut slopes (Acs) in bedrock and colluvium and road side-cast (Ars) along the Aqueduct Mesa access road and cut slopes, road side-cast, and bladed areas (Ab) associated with power transmission line. Retention ponds can be seen on the east end of the tailings area.

Figure 33. View along the Aqueduct Mesa access road south of the portal area. Shown are cut slopes (Acs) in bedrock and colluvium and narrow zone of road side-cast (Ars). Survey Butte is on the left in the photograph.

temporary storage on the hillslopes (Figure 34). Many of the flat areas of artificial fill are vegetated with grasses and low shrubs. Artificial fill is commonly emplaced simply by dumping mined waste rock into a topographic low and continuing to dump until the fill is built to the level desired, or by the same process but engineered by careful selection of material size and composition, adequate mixing, and compaction in designed layers, or lifts. For building and major highway construction, engineered fill is normally required. It is not known if the artificial fill in staging areas near U12t Tunnel was engineered or simply dumped on the existing surface. Because there is no obvious cracking of concrete pads or displacements of the fills after nearly 40 years, it is likely that some form of compaction was used. The composition of the fill indicates that the source of fill material was muck from the mining activities during U12t Tunnel development. Because of the similarity of geologic materials mined from the U12t Tunnel, and the impracticality of transporting specialized fill to the site, it is unlikely that a prescribed mix of fill was required. Also, because muck from tunneling is commonly a mix of fine and coarse material, the U12t Tunnel material would probably have served as adequate fill.

Rearrangement of the natural drainage for the main road in the valley is most evident beyond the map area where relocation of the stream channel was necessary and resulted in loss of natural riparian vegetation, and increased runoff and erosion from the road surface and roadside ditches. To control surface runoff from slopes above and below roads, ditches (Ad) were constructed to intercept surface flow.

Retention ponds (Ap) are artificially constructed ponds for the purpose of capturing tunnel water during mining activities. As a consequence of the pond locations, water and sediment runoff from the tailings slopes are captured by the ponds. A series of six engineered ponds is located in the axial valley on a former fluvial terrace associated with the tributary to Tongue Wash (Figures 32, 35). The ponds are situated at the toe of the tailings slopes and are unlined. The ponds cover an area of about 1.7 acres (0.7 hectares) or less than 1 percent of the geomorphic study area.

Road side-cast (Ars) consists of road bed material that is graded from the road as part of the roadbed leveling and smoothing process and is pushed to the side of the road, often over the edge of steep slopes where it may be transported long distances down slope. The slope angle, material consistency, and amount of material govern the distance of down slope movement and subsequent impact on the hillslope system. For the purposes of this report, the road side-cast also includes fill material that is draped over hill slopes as a result of the process of creating fill areas such as road turnouts and staging areas. In the study area, the road side-cast covers about 40 acres (16 hectares) or about 4 percent of the area. The road side-cast is most notable on the hillslopes flanking Aqueduct Mesa and Survey Butte south of the U12t Portal. The slopes adjacent to the road are very steep (greater than 70 percent slope) and a large amount of material was displaced during the cutting and filling when extending the road up the slopes of Aqueduct Mesa (Figures 36-38). Although difficult to determine without extensive field investigation, a visual inspection suggests that the most significant amounts of road side-cast material extend 100 ft (30 m) or less down the hillslope. The greatest impact from the perspective of modification to the landscape is confined to a few meters from the road bed.

Figure 34. View west of artificial fill (Af) blocking a tributary to "The Aqueduct" drainage on Aqueduct Mesa. Approximately 30 ft (10 m) of fill was placed over a culvert pipe to provide road access to the Milagro trailer park. Sediment has accumulated upstream of the road fill.

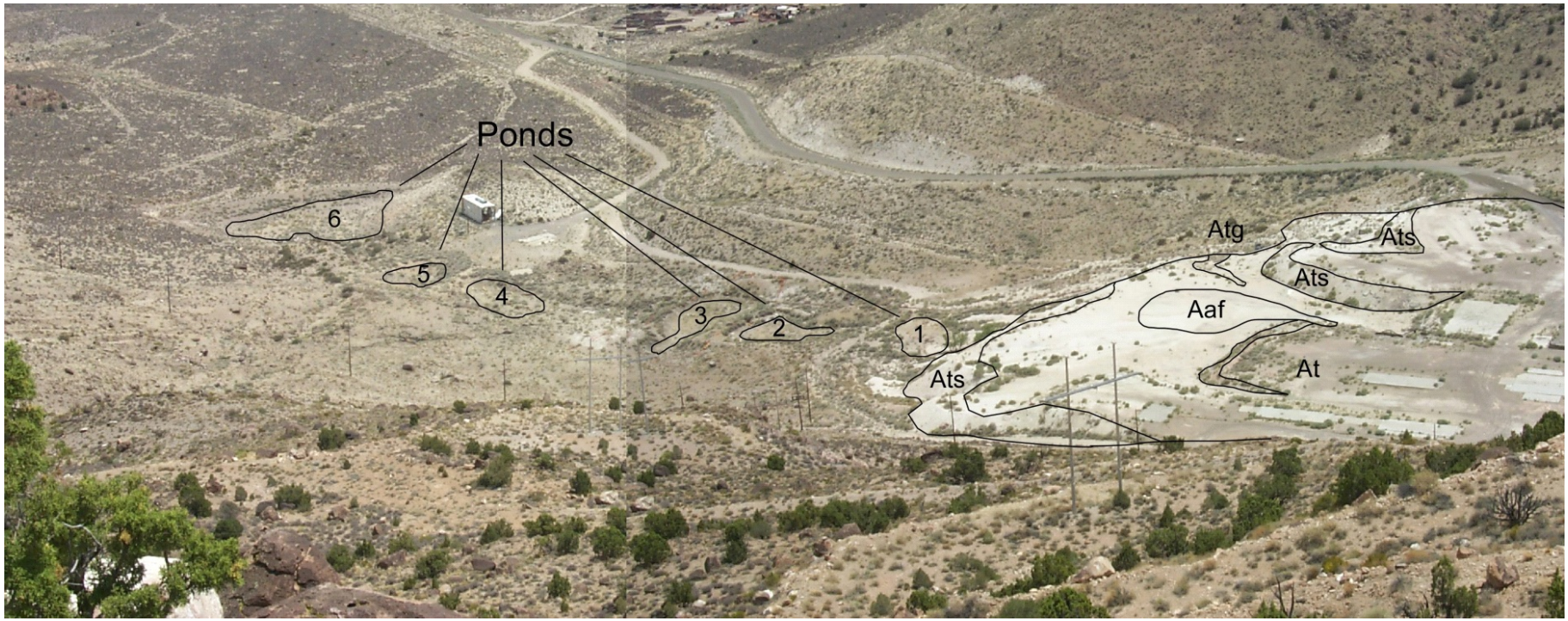

Figure 35. View southeast from the top of Aqueduct Mesa showing the spatial arrangement of the six retention ponds (Ap).

Figure 36. View east from the edge of Aqueduct Mesa toward the portal area. Shown are the extent of operations and road-side cast (Ars) along access road on the flank of the mesa.

Figure 37. Example of bedrock cut slopes (Acs) in the portal area. At the top of the bedrock exposure, road side-cast (Ars) from road and terracing is visible.

Figure 38. Example of Ars, road side-cast; material bladed from the road surface during construction and subsequent road maintenance. Rilled tailings are observed in the foreground.

Mine tailings (At) consist of material mined during tunnel construction and post-test reentry of the tunnels. In typical mining operations, as mining progresses, the muck removed following drilling and blasting is dumped on the hillslope at or near the tunnel portal. As more and more material is removed, a broad area can be built up to accommodate necessary construction-related activities, buildings, and equipment staging areas. Excess muck is pushed over the edge where it may travel down slope until the angle of repose is attained (Ats) (Figures 35-36, 39-40). There is no doubt that during initial tunnel development a certain volume of material was dumped directly onto the slope adjacent to the portal area, but as the U12t tunnel system became more extensive it was necessary to design an efficient system to distribute tailings in a systematic manner. At U12t Tunnel, it is apparent that a significant operation was designed to transport muck by rail from the tunnel workings to a dumping station (Figures 41-42) where heavy equipment redistributed the muck on the tailing pile. The tailings, including buildings and roads situated on the tailings, cover a large area (approximately 40 acres or 16 hectares) and have filled a significant portion of the Tongue Wash tributary. The existing prism of mine waste is about 1,300 ft (400 m) long and wide. The depth is difficult to estimate because modern topographic maps depict the current topography. The greatest vertical thickness is about 120 ft (36 m) at the easternmost end of the tailing pile and tapers to a few feet at the western end. Thus, the volume of tailings disposed at the site is several tens of thousands of cubic feet. Much of the native vegetation was destroyed and little vegetation other than grasses and sparse sage and rabbit brush has established in the intervening decades since the last tunneling activities were undertaken.

Rilled and eroded tailings occur on relatively unvegetated tailings slopes (Ats) (Figures 38-40) and are characterized by visible dendritic networks of rills, parallel rills, and shallow gullies (< 0.3 m deep). Approximately 2 acres (0.9 hectares) of unvegetated tailings slopes (Ats) are present on the margins of the tailings area. Some of the eroded material is temporarily stored in small alluvial fans (Aaf) that form on the terrace treads following precipitation events. The small alluvial fans on terraced tailings cover about 0.4 acre (0.1 hectare).

Gullied tailings (Atg) are prominent sites of intense vertical and lateral erosion of the tailings slope (Figures 39, 43). Mapped gullied tailings cover about 0.2 acres (0.06 hectares) of the study area, which represents about 8 percent of the exposed tailings slopes. The gullied tailings occur on unvegetated portions of the tailings slope and may be several meters deep and several meters wide. The expansion of individual gullies commonly occurs by fluvial erosional processes, but localized slope failure of banks, localized debris flow, and sapping processes also occur. In some locations the gullies have expanded into dendritic drainage patterns that extend to the head of the tailings slope. The major gullies are associated with poorly controlled surface drainage in the broad, relatively level areas formerly used as staging areas and equipment storage.

The principal access to the U12t Tunnel complex also served as an access to the top of Aqueduct Mesa (Figures 33, 44-46). Since the Midas Myth/Milagro test conducted February 15, 1984 in the U12t Tunnel, however, the access via this road has been closed. Evidence of numerous small, defunct roads branching from the main road is still visible, however they are generally inaccessible. The principal roadbed is unimproved and generally is sloped to provide inboard drainage to roadside

Figure 39. Example of tailing slopes (Ats) at the eastern edge of the staging and dump area. Gullying of the tailings (Atg) has occurred in this area resulting in incision of more than 6 ft (2 m) into the mine tailings.

Figure 40. View south at the eastern edge of the tailings dump area. Shown are tailing slopes (Ats) and road side-cast (Ars) material and and colluvial covered slopes (Qc) on the flanks of Survey Butte.

Figure 41. Tailings dump station and rail line, 2006.

Figure 42. General view of tailings dump station and terraced tailings pile, 2006.

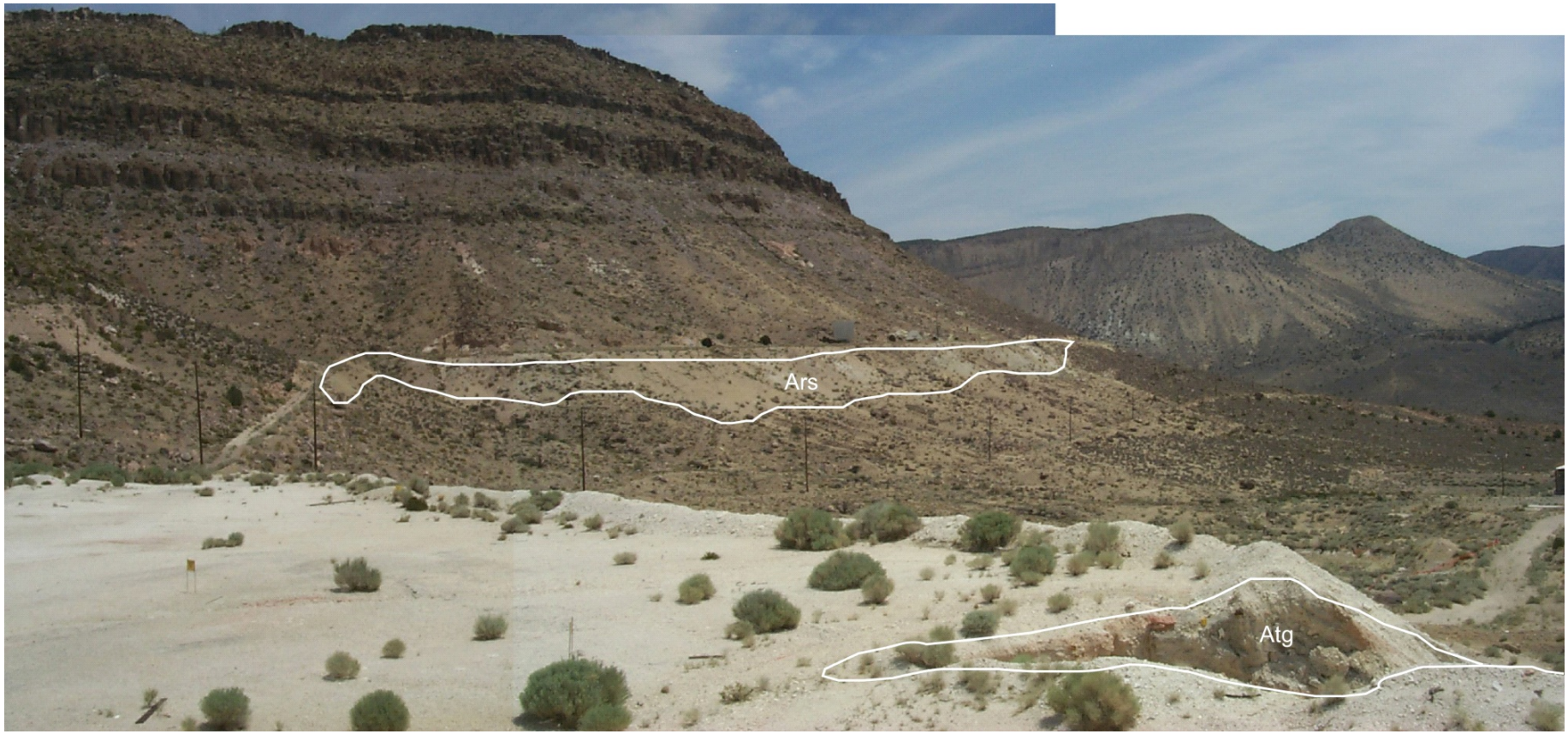

Figure 43. View northeast of gullied tailings (Atg) on the east end of the tailings pile area at U12t Tunnel. In the background are a mix of road side-cast (Ars) and tailings from U12i, U12j, and U12k adits on the flank of Aqueduct Mesa.

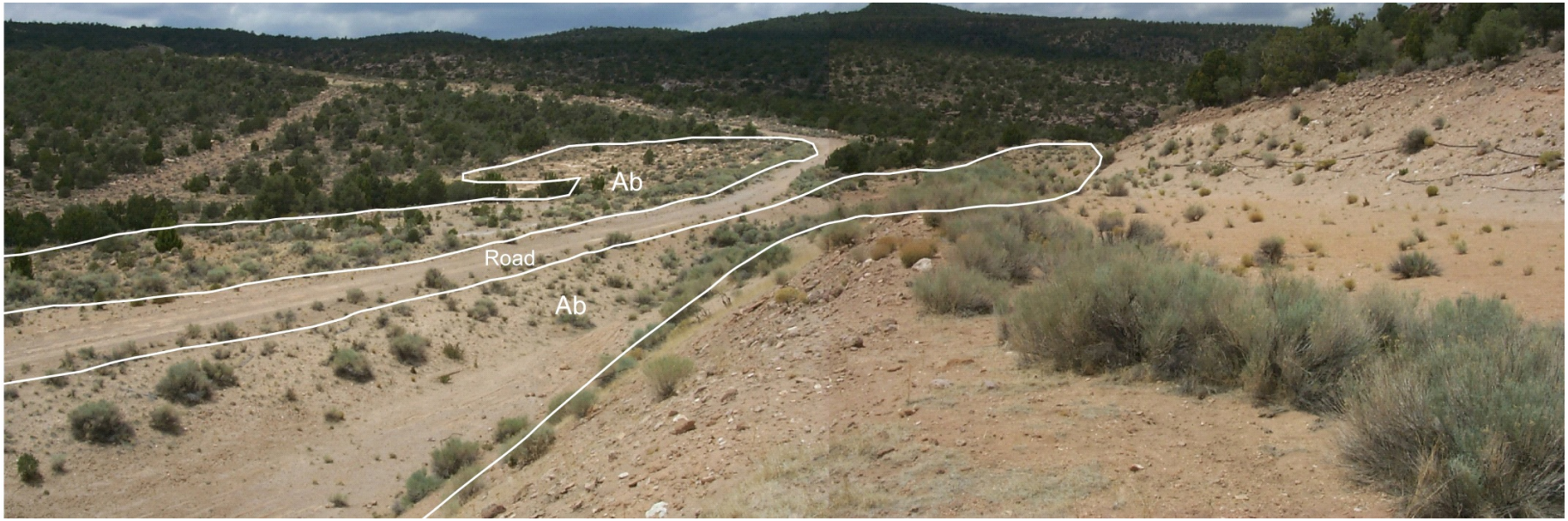

Figure 44. View southwest of large bladed areas (Ab) along the access road on top of Aqueduct Mesa. Area in the foreground was likely a borrow pit.

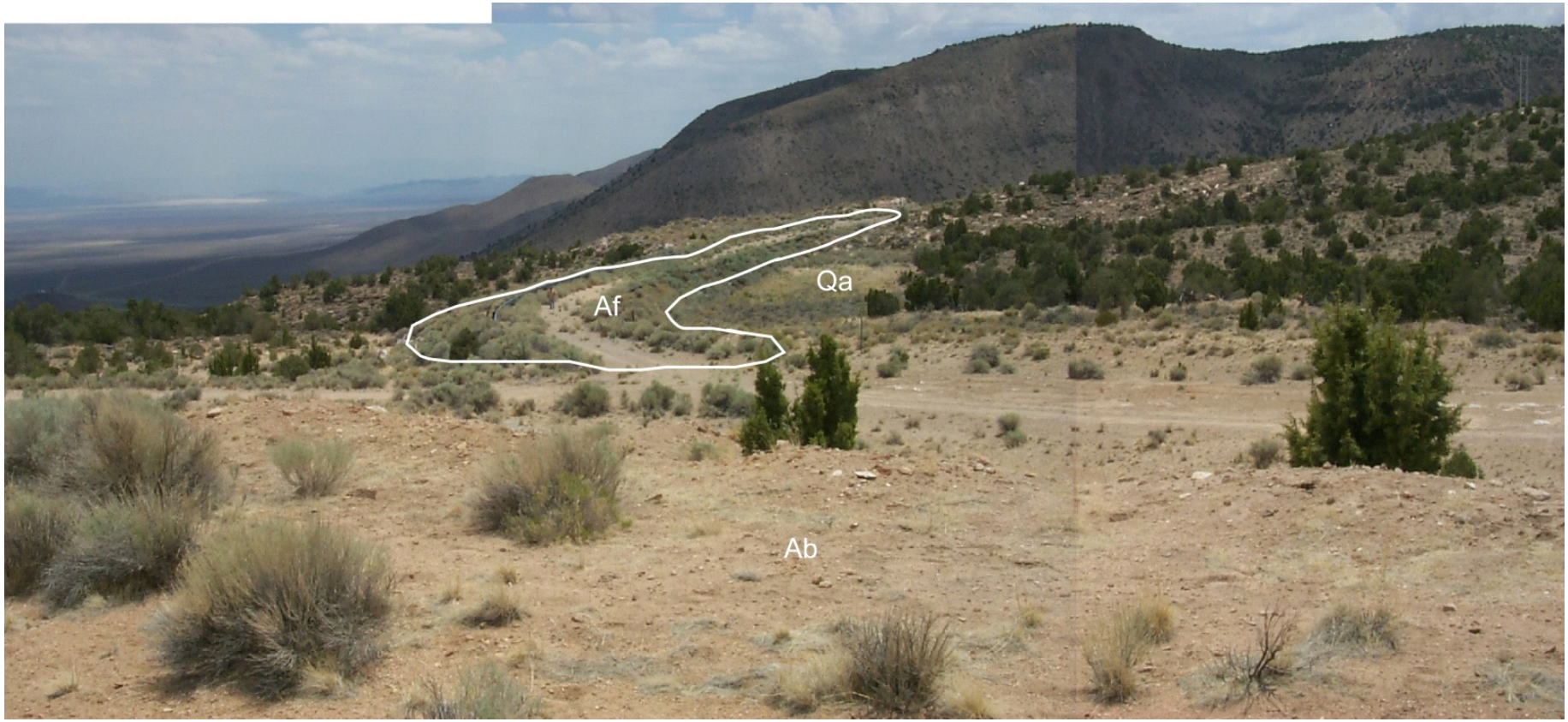

Figure 45. View to the southeast showing the access road on Aqueduct Mesa where it crosses a tributary drainage. Insufficient drainage beneath the road surface has resulted in deposition of sediment (Qa) and creation of a small area capable of storing seasonal moisture as standing water and in shallow ground water. Vegetation associated with this small riparian environment is consistent with other dry marsh vegetation. Bladed areas (Ab) are on both sides of the road.

Figure 46. Example of fluvial terrace (Qt) and fluvial gravel inset into beveled bedrock surface near the U12t Tunnel portal. This gravel was associated with the Tongue Wash tributary drainage and colluvium from adjacent hillslopes. Gravel is cemented by pedogenic calcium carbonate indicating many thousands of years of landscape stability and soil formation. Gravel is inset into the ash-fall tuff of Tunnel Bed 4 (Tilt4) of the Grouse Canyon Member of the Indian Trail Formation.

ditches. Numerous smaller roads serving the top of Aqueduct Mesa and various communications and energy transmission lines crisscross the sides of the mesa. The road area covers about 4 percent of the study area (about 40 acres or 16 hectares).

Surficial Geologic Units

The deposits of these units consist of alluvium, colluvium, and landslide deposits (Figure 32). They are considered to be Holocene, and likely late Holocene, because pedogenic features indicating appreciable soil development is not apparent on most deposits. Some small remnants of soils on older fluvial terraces and colluvial deposits are found in the area around the portal (Figures 46-49). The steep hillslope environment of the area also contributes to the absence of well-developed soils on the upper slopes because of mixing of the soil caused by mass wasting processes.

Quaternary alluvium is mapped along ephemeral stream channels and constitutes about 2 percent (22 acres) of the study area. It consists of thin deposits of unconsolidated silt, sand, and gravel transported and deposited during rain events and snow melt of magnitudes sufficient to generate runoff. Quaternary alluvium is derived from erosion of hillslopes, tailings piles, and channel margins.

Quaternary fluvial terraces (Qt) are represented by small, less than 0.7 acre (0.3 hectare) remnants of fluvial terraces along the axial valley of the tributary to Tongue Wash. These remnants are situated about 3 ft (1 m) above the active floodplain and channel and are vegetated primarily by shrubs. Although the soil was not observed, elsewhere in the region, a soil having a weakly developed B horizon would be observed on these Holocene terraces.

Quaternary colluvium (Qc) is mapped throughout the area and consists of a very thin veneer, generally 20 inches (50 cm) or less of silt, sand, gravel, angular cobbles, and angular boulders derived from bedded tuffs and welded tuff. Colluvium covers about 33 percent or 340 acres (137 hectares) of the geomorphic study area. All grain sizes can be derived from the mechanical and chemical weathering of bedrock units in the area; however, a thin silty soil crust indicates that an eolian silt component is probably present.

Other Surface Altering Effects

In addition to surface modifications in the immediate vicinity of the U12t Tunnel portal, there were activities on the mesa top. Disturbance observed includes surface alteration caused by road construction, trailer park pad preparations, borehole drilling sites, electrical transmission lines and generating stations, and local quarry and bedrock excavation for building pads.

Road disturbances are similar, although the regolith on the mesa top is generally thin and the road bed is commonly at or near bedrock. Based on composition of road bed material, it appears that some exotic road-bed material was imported. Broad areas were leveled by blading (Ab) as well as cutting and filling for preparation of trailer parks and temporary building sites (Figures 50-51). In some

Figure 47. View of colluvial slopes of Survey Butte. Rock units exposed are ash-fall tuffs associated with the Belted Range Tuff (Tba). In the foreground are fluvial terrace remnants associated with the Tongue Wash tributary that bisects the U12t Tunnel area.

Figure 48. View of the Tongue Wash tributary alluvial valley (Qa) and terrace remnants immediately west of the U12t Tunnel portal. Colluvial slopes (Qc) on the flanks of Survey Butte and the northeast part of Rainier Mesa are visible in the background.

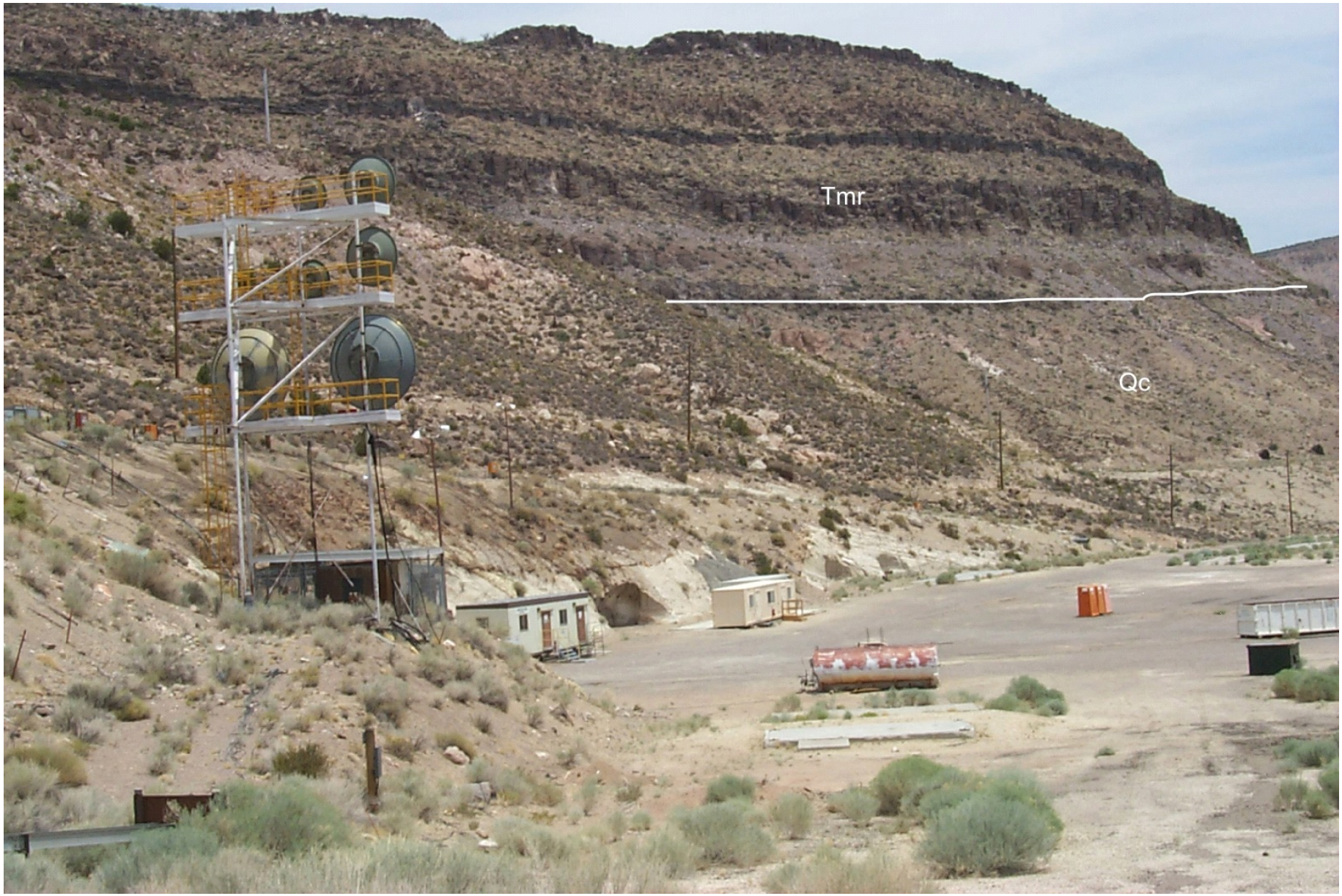

Figure 49. View northeast of the U12t Tunnel portal area and flanks of Aqueduct Mesa. The prominent cliff-forming bedrock above the colluvial slopes (Qc) belongs to the Rainier Mesa Member (Tmr) of the Timber Mountain Tuff.

Figure 50. Large bladed area (Ab) of the U12t Tunnel main mesa trailer park on top of Aqueduct Mesa. Configuration of vertical cuts in the Rainier Mesa Member (Tmr) indicate quarry activities occurred at this site.

Figure 51. Example of a broad bladed area (Ab), removing thin mantle of colluvium overlying bedrock, for the U12t Tunnel mesa trailer park on top of Aqueduct Mesa.

cases the welded tuff on the mesa was quarried as fill material and as part of site preparation for the trailer parks. Borehole locations included leveled areas of fill for drill rig pads, and small ponds for circulation fluids are present at some sites. These were typically made by moving the loose regolith at the site to form berms to retain the fluids. Roads were cut for transmission lines as well as communication lines.

Fissures are visible at various places on the surface of Aqueduct Mesa (Figure 52). The fissures are the result of ground shaking as well as the collapse of the underground blast cavities and chimneys. In some cases, vertical displacement of up to 12 inches (30 cm) occurred on new fractures and displacement on existing fractures and faults were observed (Snyder 1972). Fissuring is extensive and fissures extend tens of meters on the surface. Small grabens several to tens of meters wide have formed and local relief on these structures may be in excess of a meter. Depth of the fissures is unknown.

Summary of Geomorphic Processes

At the U12t Tunnel complex, modifications of the landscape have resulted from four principal activities: 1) road construction and maintenance, 2) mining activities related to development of the U12t Tunnel complex, 3) site preparation for activities related to experiments and testing in the U12t Tunnel complex, and 4) construction of retention ponds in the alluvial valley.

Road construction was conducted to create an access road to the U12t Tunnel site and to the top of Aqueduct Mesa. In the alluvial valley fronting the Portal Area, some branches of the former stream channel have been filled or relocated with the result that the roadbed now acts as a source of sediment and generator of runoff from direct precipitation. On the steeper sections of the road as it climbs the flanks of the mesa, some blasting was necessary for road building, but excavating and scraping bedrock was the most prevalent method of construction. Material side-cast from the roads and fill piles typically is restricted to a narrow (16 ft or about 5 m) corridor along the road.

Mining activities associated with development of the U12t Tunnel are responsible for the talus deposit immediately at the portal and elsewhere. The broad, artificial fill terraces at the portal and in the vicinity attest to the large volume of material placed on the upper hillslopes. The tailings locally may be up to 120 ft (36 m) thick at the east end of the tailings directly above the former stream valley. Small rivulets and second order stream networks have developed on the tailings pile and have been transporting fine grained tailings to the main branch of the tributary, into retention ponds, and to the lower parts of the drainage system.

Site preparation activities, primarily the emplacement of fill for the preparation of building sites and staging areas, have resulted in small but recognizable modifications of the natural landscape. Retention ponds are situated on the valley floor on former fluvial terraces associated with the Tongue Wash tributary. The upper pond is partially buried by sediment derived from the tailings. Despite the amount of construction activity, the footprint of the U12t Tunnel complex is relatively small.

Figure 52. Fissures in the Rainier Mesa Member (Tmr) of the Timber Mountain Tuff on the top of Aqueduct Mesa. Fissures formed during nuclear test detonation in the U12t Tunnel.