# DISTRIBUTION SHEET

| To | From | Page 1 of 1 |
|---|---|---|
| J. R. Bellomy | B. F. Norman/Equipment Stress Analysis/8D430 | Date 10/07/94 |
| Project Title/Work Order | | EDT No. 142176 |
| Spool Assembly Support Analysis/D2M9G | | ECN No. N/A |

| Name | MSIN | Text With All Attach. | Text Only | Attach./ Appendix Only | EDT/ECN Only |
|---|---|---|---|---|---|
| L. W. Bartholf | H5-60 | | X | | |
| J. R. Bellomy | S6-12 | X | | | |
| J. P. Harris | S6-12 | | X | | |
| R. L. Jorissen | H5-53 | | X | | |
| T. C. Mackey | S2-03 | | X | | |
| B. F. Norman | H5-53 | X | | | |
| R. B. Pan | H5-53 | X | | | |
| Central Files (2) | | X | | | |
| OSTI (2) | L8-07 | X | | | |

A-6000-135 (01/93) WEF067

DISTRIBUTION OF THIS DOCUMENT IS UNLIMITED

OCT 2 4 1994
Sta. #3 58

# ENGINEERING DATA TRANSMITTAL



1. EDT 142176

| | | |
|---|---|---|
| 2. To: (Receiving Organization) Single-Shell Tank Retrieval/J. P. Harris | 3. From: (Originating Organization) Equipment Stress Analysis | 4. Related EDT No.: N/A |
| 5. Proj./Prog./Dept./Div.: Spool Assembly Support Analysis/D2M9G | 6. Cog. Engr.: J. R. Bellomy | 7. Purchase Order No.: N/A |
| 8. Originator Remarks: | | 9. Equip./Component No.: N/A |
| | | 10. System/Bldg./Facility: N/A |
| 11. Receiver Remarks: | | 12. Major Assm. Dwg. No.: H-2-83739, H-2-83740, & H2-83741 |
| | | 13. Permit/Permit Application No.: N/A |
| | | 14. Required Response Date: |

15. DATA TRANSMITTED

| (A) Item No. | (B) Document/Drawing No. | (C) Sheet No. | (D) Rev. No. | (E) Title or Description of Data Transmitted | (F) Impact Level | (G) Reason for Transmittal | (H) Originator Disposition | (I) Receiver Disposition |
|---|---|---|---|---|---|---|---|---|
| 1 | WHC-SD-W320-DA-004 | | 0 | Spool Assembly Support Analysis | SQ | 1 | 1 | |
| | | | | | | | | |
| | | | | | | | | |

16. KEY

| Impact Level (F) | Reason for Transmittal (G) | Disposition (H) & (I) |
|---|---|---|
| 1, 2, 3, or 4 (see MRP 5.43) | 1. Approval 4. Review<br>2. Release 5. Post-Review<br>3. Information 6. Dist. (Receipt Acknow. Required) | 1. Approved 4. Reviewed no/comment<br>2. Approved w/comment 5. Reviewed w/comment<br>3. Disapproved w/comment 6. Receipt acknowledged |

17. SIGNATURE/DISTRIBUTION (See Impact Level for required signatures)

| (G) Reason | (H) Disp. | (J) Name | (K) Signature | (L) Date | (M) MSIN | (J) Name | (K) Signature | (L) Date | (M) MSIN | (G) Reason | (H) Disp. |
|---|---|---|---|---|---|---|---|---|---|---|---|
| 1 | 1 | Cog.Eng. | J. R. Bellomy | 10/24/94 | S6-12 | ESA Eng. | B. F. Norman | | H5-53 | 1 | 1 |
| 1 | 1 | Cog. Mgr. | J. P. Harris | 10/24/94 | S6-12 | | | | | | |
| 1 | 1 | QA | J. J. Huston | 10/24/94 | S6-12 | | | | | | |
| 1 | 1 | Safety | G. E. McPherson | 10-10-94 | S2-41 | | | | | | |
| 1 | 1 | ESA Mgr. | R. B. Pan | | H5-53 | | | | | | |
| | | | | | | | | | | | |

| 18. | 19. | 20. | 21. DOE APPROVAL (if required) |
|---|---|---|---|
| 10-7-94<br>Signature of EDT Originator / Date<br>B. F. Norman | 10/24/94<br>Authorized Representative for Receiving Organization / Date<br>J. R. Bellomy | 10/24/94<br>Cognizant/Project Engineer's Manager / Date<br>J. P. Harris | Ltr. No.<br>☐ Approved<br>☐ Approved w/comments<br>☐ Disapproved w/comments |

BD-7400-172-2 (07/91) GEF097

# RELEASE AUTHORIZATION

**Document Number:** WHC-SD-W320-DA-004, REV 0

**Document Title:** Spool Assembly Support Analysis

**Release Date:** 10/24/94

* * * * * * * * * * * * *

**This document was reviewed following the procedures described in WHC-CM-3-4 and is:**

**APPROVED FOR PUBLIC RELEASE**

* * * * * * * * * * * * *

**WHC Information Release Administration Specialist:**

Kara Broz — October 24, 1994

(Signature) — (Date)

TRADEMARK DISCLAIMER. Reference herein to any specific commercial product, process, or service by trade name, trademark, manufacturer, or otherwise, does not necessarily constitute or imply its endorsement, recommendation, or favoring by the United States Government or any agency thereof or its contractors or subcontractors.

This report has been reproduced from the best available copy. Available in paper copy and microfiche. Printed in the United States of America. Available to the U.S. Department of Energy and its contractors from

U.S. Department of Energy
Office of Scientific and Technical Information (OSTI)
P.O. Box 62
Oak Ridge, TN 37831
Telephone: (615) 576-8401

Available to the public from the U.S. Department of Commerce
National Technical Information Service (NTIS)
5285 Port Royal Road
Springfield, VA 22161
(703) 487-4650

MASTER

A-6001-400.2 (09/94) WEF256

DISTRIBUTION OF THIS DOCUMENT IS UNLIMITED

## DISCLAIMER

Portions of this document may be illegible in electronic image products. Images are produced from the best available original document.

# SUPPORTING DOCUMENT

1. Total Pages 59

2. Title
Spool Assembly Support Analysis

3. Number
WHC-SD-W320-DA-004

4. Rev No.
0

5. Key Words
Heel Pit
Pump Pit
Sluicing Pit

APPROVED FOR PUBLIC RELEASE

KMB 10/24/94

6. Author
Name: B. F. Norman

B. F. Norman
Signature

Organization/Charge Code Equipment Stress Analysis/D2M9G

7. Abstract

This document provides the wind/seismic analysis and evaluation for the pump pit spool assemblies. Hand calculations were used for the analysis. UBC, AISC, and load factors were used in this evaluation. The results show that the actual loads are under the allowable loads and all requirements are met.

8. PURPOSE AND USE OF DOCUMENT - This document was prepared for use within the U.S. Department of Energy and its contractors. It is to be used only to perform, direct, or integrate work under U.S. Department of Energy contracts. This document is not approved for public release until reviewed.

PATENT STATUS - This document copy, since it is transmitted in advance of patent clearance, is made available in confidence solely for use in performance of work under contracts with the U.S. Department of Energy. This document is not to be published nor its contents otherwise disseminated or used for purposes other than specified above before patent approval for such release or use has been secured, upon request, from the Patent Counsel, U.S. Department of Energy Field Office, Richland, WA.

DISCLAIMER - This report was prepared as an account of work sponsored by an agency of the United States Government. Neither the United States Government nor any agency thereof, nor any of their employees, nor any of their contractors, subcontractors or their employees, makes any warranty, express or implied, or assumes any legal liability or responsibility for the accuracy, completeness, or any third party's use or the results of such use of any information, apparatus, product, or process disclosed, or represents that its use would not infringe privately owned rights. Reference herein to any specific commercial product, process, or service by trade name, trademark, manufacturer, or otherwise, does not necessarily constitute or imply its endorsement, recommendation, or favoring by the United States Government or any agency thereof or its contractors or subcontractors. The views and opinions of authors expressed herein do not necessarily state or reflect those of the United States Government or any agency thereof.

9. Impact Level SQ

10. RELEASE STAMP

OFFICIAL RELEASE 58
BY WHC
DATE OCT 24 1994
Sta. #3

# SPOOL ASSEMBLY SUPPORT ANALYSIS

August 1994

PREPARED BY: _____ DATE: 9-6-94
B. F. Norman, Engineer
Equipment Stress Analysis

REVIEWED BY: _____ DATE: 10/7/94
R. L. Jonissen, Principal Engineer
Equipment Stress Analysis

APPROVED BY: _____ DATE: 10/7/94
R. B. Pan, Manager
Equipment Stress Analysis

Westinghouse Hanford Company
Hanford Operations and Engineering Contractor
for the
U.S. Department of Energy

# CHECKLIST FOR INDEPENDENT REVIEW

Document Reviewed WHC-SD-W320-DA-004, Rev. 0

Author B. F. Norman

| Yes | No | NA | |
|---|---|---|---|
| [X] | [ ] | [ ] | Problem completely defined. |
| [X] | [ ] | [ ] | Necessary assumptions explicitly stated and supported. |
| [ ] | [ ] | [X] | Computer codes and data files documented. |
| [X] | [ ] | [ ] | Data used in calculations explicitly stated in document. |
| [X] | [ ] | [ ] | Data checked for consistency with original source information as applicable. |
| [X] | [ ] | [ ] | Mathematical derivations checked including dimensional consistency of results. |
| [ ] | [ ] | [X] | Models appropriate and used within range of validity or use outside range of established validity justified. |
| [X] | [ ] | [ ] | Hand calculations checked for errors. |
| [ ] | [ ] | [X] | Code run streams correct and consistent with analysis documentation. |
| [ ] | [ ] | [X] | Code output consistent with input and with results reported in analysis documentation. |
| [X ] | [ ] | [ ] | Acceptability limits on analytical results applicable and supported. Limits checked against sources. |
| [X] | [ ] | [ ] | Safety margins consistent with good engineering practices. |
| [X] | [ ] | [ ] | Conclusions consistent with analytical results and applicable limits. |
| [X] | [ ] | [ ] | Results and conclusions address all points required in the problem statement. |

**MANDATORY** Software QA Log Number N/A

Randy Jorissen
Reviewer - R. L. Jorissen

10/7/94
Date

# DESIGN VERIFICATION METHOD

The need for design verification has been reviewed with the method selected as indicated below: (ESR/Work Plan # WP-8D430-289).

| | |
|---|---|
| X | Independent Review |
| | Alternative Calculations |
| | Qualification Testing |
| | Formal Design Review |

R. B. Pan R.B. Pan 10/7/94
Cognizant/Project/Design Manger

SD # WHC-SD-W320-DA-004, Rev. 0

ECN #

DWG(S) #

# CONTENTS

| | | Page |
|---|---|---|
| 1.0 | INTRODUCTION | 1 |
| 2.0 | RESULTS | 1 |
| 3.0 | CONFIGURATION AND LOADINGS | 2 |
| | 3.1 CONFIGURATION | 2 |
| | 3.2 LOADINGS | 2 |
| 4.0 | STRESS ANALYSIS | 2 |
| 5.0 | REFERENCES | 3 |

## APPENDICES

| | |
|---|---|
| HEEL PIT SPOOL ASSEMBLY | A-1 |
| PUMP PIT SPOOL ASSEMBLY | B-1 |
| SLUICING PIT SPOOL ASSEMBLY | C-1 |
| BOX SIZES FOR ASSEMBLIES | D-1 |

## ATTACHMENT

DSI FROM F. H. HUANG TO T. C. MACKEY, "WEIGHTS AND CONTAINER SIZES FOR PIT PLATFORMS, SPOOL PIECE ASSEMBLY, AND PIT COVER PLATE, DATED MARCH 24, 1994

# SPOOL ASSEMBLY SUPPORT ANALYSIS

## 1.0 INTRODUCTION

A stress analysis was performed on three spool-piece assembly supports: the heel pit, the pump pit, and the sluicing pit. These supports will be used to transport the spool assemblies from location to location on flatbed trucks or in shipping containers. Hand calculations were used to evaluate the stresses in the three support systems.

The design is in accordance with SDC 4.1 (HPS) and is safety class 3. The design and fabrication is in accordance with American Institute of Steel Construction, Manual of Steel Construction (AISC 1989). All welding and weld inspection is in accordance with AWS D1.1. Loads were applied to the spool assemblies in accordance with the *Uniform Building Code* (UBC 1991) and ASCE 7-88 (ASCE 1988).

Results of the analysis appear in Section 2.0. Loadings and configurations appear in Section 3.0. Section 4.0 describes the stress analysis process, and the appendices contain the detailed stress calculations.

## 2.0 RESULTS

The loads for the support members were based on limits prescribed in the *Manual of Steel Construction, Allowable Strength Design* (AISC 1989, 9th ed.). The limits for the hoisting members of the support system were reduced to a 1/3 of yield strength.

The resulting stresses in all three support assemblies are acceptable. These include the W members for top and bottom platforms and the structural tubes for column supports, the structural tubes for lifting and diagonal bracing, and the angles used to guide the spool assemblies. Added bracing (cribbing) will be installed in the field in sufficient quantity, to prevent movement of spool assemblies inside the crates while being transported.

The sizing of the shipping crate was developed in a calculation done by F. H. Huang. These results can be found in Appendix D.

# 3.0 CONFIGURATION AND LOADINGS

## 3.1 CONFIGURATION

The configurations for the three support assemblies are documented in the following drawings:

- H-2-83739
- H-2-83740
- H-2-83741

The configurations and dimensions of the components analyzed appear in Appendices A, B, and C along with the calculations.

## 3.2 LOADINGS

The loading criteria for the supports analyzed were based on the weight of each spool assembly. Discussions of these weights and loadings appear in Appendices A, B, and C along with the calculations.

# 4.0 STRESS ANALYSIS

Loads were applied to the spool assemblies in accordance with the *Uniform Building Code* (UBC 1991) and ASCE 7-88 (ASCE 1988). Hand calculations were used to analyze individual supports. The loads for each component were provided via a memo dated March 24, 1994, from F. F. Huang to T. C. Mackey (Huang 1994). Appendices A, B, and C discuss the applied loads in depth, as well as the allowable and actual loads.

# 5.0 REFERENCES

AISC, 1989, *Manual of Steel Construction, Allowable Strength Design*, 9th edition, American Institute of Steel Construction, Chicago, Illinois.

ASCE, 1988, *Minimum Design Loads for Buildings and Other Structures*, ASCE 7-88, American Society of Civil Engineers, New York, New York.

Huang, F. H., 1994, DSI to T. C. Mackey, "Weights and Container Sizes for Pit Platforms," dated March 24, 1994, Westinghouse Hanford Company, Richland, Washington (see Attachment 1).

UBC, 1991, *Uniform Building Code*, International Conference of Building Officials, Whittier, California.

# APPENDIX A

## HEEL PIT SPOOL ASSEMBLY

# ANALYTICAL CALCULATIONS



Subject HEEL PIT SPOOL ASSEMBLY SUPPORT

Originator BF NORMAN Date 4-26-94

Checker [illegible] Date 5/9/94

OBJECTIVE: WE WERE ASKED TO ANALYSE A SUPPORT FOR THE HEEL PIT SPOOL ASSEMBLY. THIS SUPPORT WILL BE USED TO SET THE PIECE OF EQUIPMENT ON AT THE FAB SHOP ALONG WITH INSIDE A CRATE WHILE BEING TRANSPORTED. WHILE BEING MOVED BY TRUCK EXTRA SHORING OR CRIBBING IS REQUIRED.* (WILL BE PROVIDED BY OTHERS). SEE CALCULATION FOR MEMBER SIZES & CONCLUSIONS.

* CRIBBING WILL BE FIELD INSTALLED AND OF SUFFICIENT QUANTITY TO PREVENT MOVEMENT OF SPOOL ASSEMBLY INSIDE CRATE WHILE BEING MOVED.

# ANALYTICAL CALCULATIONS



Subject HEEL PIT SPOOL ASSEMBLY SUPPORT

Originator BF NORMAN Date 4-25-94

Checker [illegible] Date 5/9/94

- NO WIND LOADS WHILE STRUCTURE IS IN BOX, BUT LOADS COULD BE SEEN WHILE STANDING OUTSIDE (SEE PAGE 6)

APPLIED LOADS
- 1.5 G ULTIMATE IN ALL DIRECTION - WHILE BEING TRANSPORTED
- 125% TO ALLOWABLE IN ALL DIRECTION FOR LOADING

- WGT OF ASSEMBLY = 8,351#
  FROM DST. DATED MARCH 24, 1994 FROM FRANK HUANG TO TOM MACKEY

  8,351# INCLUDES 3200# FOR THE SUPPORT SYSTEM WHICH WILL BE DESIGNED IN THIS CALCULATION.

USE 8,351# AS LOAD SEEN BY SUPPORT STRUCTURE

DIMENSIONS OF SUPPORT PLATFORM (H-2-820737 SH #1-4)

COMPARE YIELD TO ULTIMATE STRESSES

AISC ALLOWABLE

$F_y$ = 36,000 psi  LOAD = 8,351 (1.25)

LOAD = 10,439#

STRESS % = 10,439/36,000 = 0.29% ← GOVERNS

TRANSPORT ALLOWABLE

$F_U$ = 58,000  LOAD = 8,351 (1.5)

LOAD = 12,527#

STRESS % = 12,527/36,000 = .22%

AISC ALLOWABLE LOADS WILL GOVERN FOR DESIGN ANALYSIS. THESE LOADS WILL ALSO MEET THE REQUIREMENTS FOR TRANSPORT (ULTIMATE STRESSES)

SO USE $F_y$ ALLOWABLES IN SUPPORT DESIGN

# ANALYTICAL CALCULATIONS



Subject: HEEL PIT SPOOL ASSEMBLY SUPPORT
Originator: RF NORMAN  Date: 4-25-94
Checker: [illegible]  Date: 5/9/94

LOAD = 10,439#

AREA = 108 X 87¼ = 9,423 in² = 65.44 ft²

PSF = 10,439 / 65.44 = 160 PSF

- ASSUME 1 BEAM HAS TO SUPPORT ½ THE LOAD OF THE PLATFORM.

(SEE PG # FOR SKETCHES & DETAILS)

108 X (87¼/2) = 4,712 in² = 32.72 ft²

PLF = 32.72 (160) / 9 = 582 PLF

TRY W 6 X 25 MEMBERS.

A = 7.34 in²  $I_x$ = 53.4  $I_y$ = 17.1
$S_x$ = 16.7  $S_y$ = 5.61
$r_x$ = 2.70  $r_y$ = 1.52

SIMPLE SUPPORTED

M = wℓ²/8 = 582 (9)²/8 = 5,893 '#

$f_{bx}$ = M/S = 5893 (12) / 16.7 = 4,235 psi

CHECK WELDS OF W CONNECTIONS

V = ½ W = 2,619  ASSUME FIXED END = M = 1/12 wℓ²
M = 3928.5

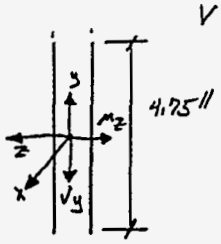


$S_w = d^2/3$ = 7.52

$f_1 = V_y / A_w$ = 2619 / 2(4.75) = 276
$f_2 = M/S$ = 3928.5 / 7.52 = 522.4
$f_r = \sqrt{(276)^2 + (522.4)^2}$ = 590
w = fr / .707 fa
w = 590 / .707 (14400) = .106 < 3/16"

∴ OK

USE W 6 X 25 FOR TOP PLATFORM

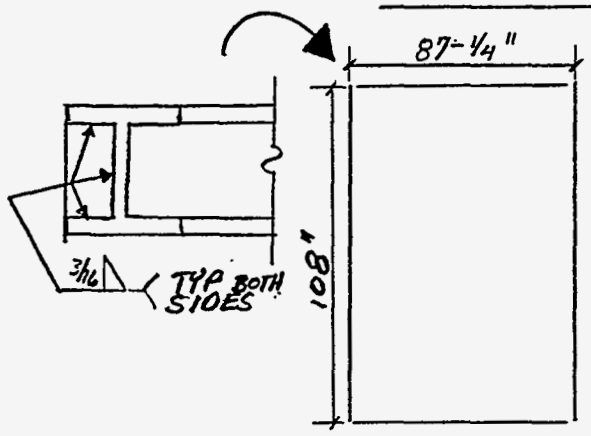


- W6X25'S TYP 4 PLACES
- USE 3/16" FILLET AT CORNER CONN.

# ANALYTICAL CALCULATIONS



Subject HEELPIT SPOOL ASSEMBLY SUPPORT
Originator B F NORMAN Date 4-25-94
Checker [illegible] Date 5/9/94

VERTICAL DIMENSIONS (H-2-820737 SH 1 SECTION A-A)

HEIGHT = 51 7/8" FROM BOTTOM OF SUPPORT STRUCTURE TO BOTTOM OF P-SEAL

3" CLEARANCE FROM BOTTOM OF CRATE

51 7/8 + 3 = 54 7/8"

* USE W 6X25'S FOR TOP SUPPORT AND BOTTOM BASE SUPPORT d = 6 3/8"

54 7/8" - 12 6/8" = 42 1/8"

- COLUMN SUPPORTS @ 4 CORNERS = 42 1/8" LONG

LOAD / 2 SUPPORTS = 10,439# /2 = 5,220 # (CORS)

USE 5,220 lbs PER COLUMN TO EQUATE IF THE PLATFORM IS NOT UNIFORMLY LOADED.

TRY 3X3X1/4" TS A = 2.59 I = 3.16 S = 2.10 r = 1.10

fa = P/A = 5,220 / 2.59 = 2,015 psi

fa 2.02 Ksi << Fa ∴ OK

USE 3X3X1/4" STRUCTURAL TUBE

CHECK LATERAL BRACING

BRACING WILL BE DESIGNED TO HANDLE ALL HORIZONTAL LOADS.

ANALYSE WORST CASE TO DESIGN MEMBERS.

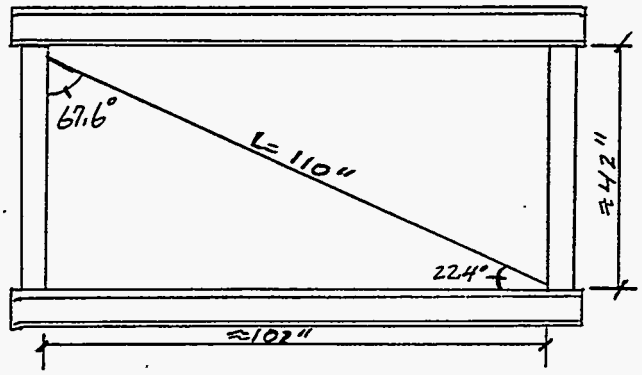

# ANALYTICAL CALCULATIONS



Subject: HEEL PIT SPOOL ASSEMBLY SUPPORT

Originator: BF NORMAN  Date: 4-26-94

Checker: [illegible]  Date: 5/9/94

LOAD = 10,439# /2 SUPPORTS

F = 5,220 POUNDS

FORCE IN MEMBER

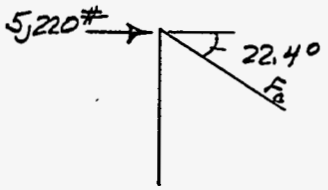


$F_a$ = 5,220 / cos 22.4 = 5,646 #

TRY 2X2 X 1/4

SUPPORTS FIXED @ BOTH ENDS.  K = 0.65  r = 0.694 in
A = 1.59 in

Kl/r = (.65)(110)/0.694

Kl/r = 103

CONSERVATIVE COMPARE W/ A36 STEEL

103 = 12.59 Ksi  (AISC p 3-16)

- IF USE GUSSET PLATE - REACTION FORCE MUST PASS THROUGH WORK POINT.

$f_a$ = 5,646/1.59 = 3,551

12.59 >> 3.55 ∴ OK

USE 2X2 X 1/4 TS FOR BRACING

LOAD TRANSFER TO WELDS

-WELDS WILL SEE SHEAR LOADS ONLY-

MIN REQD LENGTH OF WELD (3/16) TO RESIST SHEAR LOADS

5,646# / 2,784 = 2.02"  WELDS = 70(.3)(.707)(1/16) =
W = 928#/16"
3/16 = 2.78 Ksi

MIN WELD REQD = 2.02"

- WELD ALL AROUND TS TO W6X25 CONNECTIONS

# ANALYTICAL CALCULATIONS



Subject: HEEL PIT SPOOL ASSEMBLY SUPPORT
Originator: BF NORMAN  Date: 4-26-94
Checker: JS Burgess  Date: 5/9/94

5

CHECK OF WIND LOADS (ASCE 7-88)

$F = q_z G_h C_f A_f$

$q_z = .00256 K_z (IV)^2$  $K_z = 0.80$, $I = 1.07$, $V = 70$ MPH

$q_z = .00256(.8)(1.07(70))^2$

$q_z = 11.49$

$G_h = 1.32$

$C_f =$  $D = 42''$

$42\sqrt{11.49} = 142 > 2.5$

$h/D = 51\frac{7}{8}/42 = 1.235$

$C_f = 0.5$

$F = 11.49(1.32)(0.5)A_f =$

$F = 7.58 A_f$ FOR CIRCULAR TUBE

USE $F = 20 A_f$ FOR FLAT MEMBER SUPPORTS

FORCE OVER ENTIRE AREA

$F_H = [9' \text{ LONG } (12'' + 6'' + 6'') + 8'(3')]20 + [42 \cdot 51\frac{7}{8}]7.58$

$F_{HORIZONTAL} = 300^{\#} + 115^{\#} = 415^{\#}$

$415 \ll 10{,}439^{\#}$  USE AISC ALLOWABLE LATERAL LOADS

CHECK OVERTURNING

- CHECK IN SHORT DIRECTION
- APPLY LOADS AT TOP OF STRUCTURE (CONS)

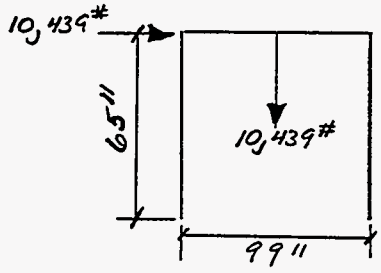


$M_O = 10{,}439^{\#}(65'') = 678{,}535''^{\#}$

$M_R = 10{,}439(99/2) = 516{,}731''^{\#}$

∴ NG TO RESIST OVERTURNING

- IF USED AS A SIMPLE SUPPORT TO STORE ASSEMBLY WHILE SITTING AT THE SHOP 125% YIELD IS NOT REQUIRED. USE $F_p = .5$(WEIGHT) (CONS)

$M_O = 8{,}351(.5)(65) = 271{,}408$

$M_R = 8{,}351(49.5) = 413{,}374$

$S.F. = 1.52 > 1.50$ ∴ OK

- WHILE TRANSPORTING EXTRA SHORING WILL BE REQUIRED INSIDE OF CRATE TO PREVENT MOVEMENT WHILE TRANSPORTING.

# ANALYTICAL CALCULATIONS



Subject HEEL PIT SPOOL ASSEMBLY SUPPORT
Originator BF NORMAN Date 4-27-94
Checker [illegible] Date 5/5/94

ANGLE SUPPORT STRUCTURE TO HOLD ASSEMBLY IN PLACE

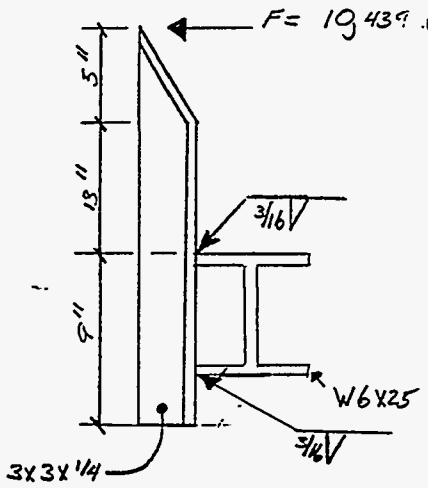


F= 19,439 (10% OF LOAD PER SUPPORT)

M = 1,044 (18") = 18,792

Fb = 21.6

S= 18,792/21,600 = 0.87

TRYANGLE 3X3X1/4 (AISC 9th ed)

S= 0.930 A= 1.44 in²

fb = M/S = 18,792/0.93 = 20,206

20.21 < 21.6 ∴ OK

Fv = .4 Fy = 14.4 Ksi

P/A = 5,220/1.44 = 3,625 psi

14.4 > 3.6 ∴ OK

USE 3X3X1/4 L

CHECK WELD

Sw = b·d = 3 X 6 3/8 = 19.125

fb = 18,792/19.125 = 983 psi

WELD REQUIRED - per 1/16 INCH

983/(.70)(.3)(.707)(1/16) = 1.06" REQUIRED

USE 3/16" FILLET WELD TOP & BOTTOM OF W MEMBERS.

# ANALYTICAL CALCULATIONS



Subject: HEEL PIT SPOOL ASSEMBLY SUPPORT
Originator: BF NORMAN  Date: 5-3-94
Checker: [illegible]  Date: 5/9/94

CHECK LIFTING LUGS & SUPPORT

WGT = 10,439#/2 LUGS = 5,220# (HANFORD SITE HOIST & RIGGING MANUAL)

- LIFTING LOCATIONS WILL BE POSITIONED AT THE FOUR CORNERS

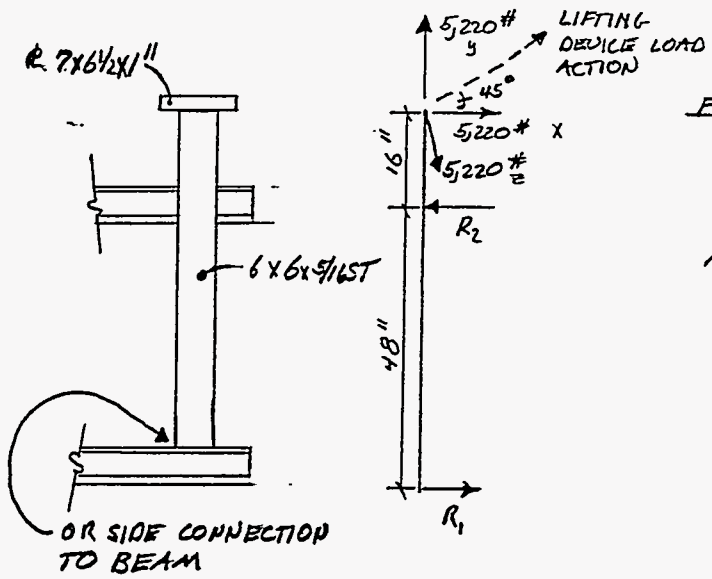


- LIFTING WILL TAKE PLACE FROM CENTER OF PLATE @ 45° ANGLE MAX

FORCE ANALYSIS

$R_1 = \frac{Pa}{l} = 5,220(16)/48 = 1,740\#$

$R_2 = P/l(l+a) = 5,220/48(16+48) = 6,960\#$

$M_{MAX} = Pa = 5,220(16) = 83,520$

$F_y = 1/3$ (YIELD) WHEN LIFTING

$F_b = .33(46) = 15.33$ KSI

$S_{REQD} = 83,520/15,333$
$S = 5.46$

- DOUBLE S VALUE (WE HAVE BENDING IN BOTH DIRECTIONS)

TRY 6X6X5/16  S = 12.1  A = 6.86  r = 2.30

$f_{bx} = 83,520/12.1 = 6,903$ psi.  $F_a = Kl/r = \frac{2(60)}{2.30}$

$f_{bz}$ = SAME AS x = 6,903 psi  52 = 18.17

$f_{ay} = 5,220/6.86 = 761$ psi  ↳ A36 STEEL CONS.

CHECK COMBINED LOADS

$6,903/15,33 + 6,903/15,33 + 761/18.17$

$0.94 < 1.0$ ∴ OK

USE 6X6X5/16" TS

# ANALYTICAL CALCULATIONS



Subject: HEEL PIT SPOOL ASSEMBLY SUPPORT

Originator: BF NORMAN  Date: 5-3-94

Checker: [illegible]  Date: 5/9/94

CHECK PLATE 1" THK 7"X6" (FIXED DUE TO WELDS ON 3 SIDES)

$M = PL/8 = 7{,}400\,(6)/8 = 5{,}550$ "#

$S$ PLATE $= 1/6\,(6)(1)^2 = 1.0$

$f_b = 5{,}550$ psi $< .33\,F_y$ ∴ OK

- SHEAR LOADS VERY MINIMAL
- COMBINED LOADS WILL BE OK - LESS THAN 1/3 OF ALLOWABLE LOADS.

- CHECK WELDS ON TS 6X6X5/16

$M = 5220\,(16) = 83{,}520$

$A_w = 12$"

$S_w = b \cdot d = (6)(6\,3/4) = 38.25$

$J_w = 178$

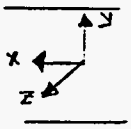


$f_y = 5{,}220/(12) = 435$

$f_x = 83{,}520\,(3)/178 = 1{,}408$

$f_z = 83{,}520/38.25 = 2{,}183$

$f_r = [(435)^2 + (1{,}408)^2 + (2183)^2]^{1/2}$  $f_r = 2{,}633$ #/in

TRY 1/4" FILLET WELD  $.707(21)(1/4) = 3{,}711$ #/in

$3{,}711 > 2{,}633$ ∴ OK [SHEAR ON BASE METAL OK $F_y = .3\,F_u$]

USE 1/4" FILLET WELDS TOP & BOTTOM
ALSO WELD BOTTOM W/ SAME WELDS

CHECK DIMENSIONS IF SPOOL ASSEMBLY IS NOT SQUARE
- ASSUME 5° ANGLE

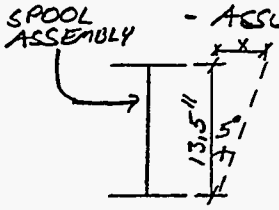


$X = 13.5 \tan a = 1.18$" USE 1 1/4"

OVERALL LENGTH = 108 71/4 = 109 1/4" → 109 1/2"

OVERALL WIDTH = 87 1/4 1 1/4 = 88 1/8" → 88 1/2"

# ANALYTICAL CALCULATIONS



Subject HEEL PIT SPOOL ASSEMBLY SUPPORT

Originator B F NORMAN Date 4-26-94

Checker J S Burgess Date 5/9/94

6

## SKETCHES

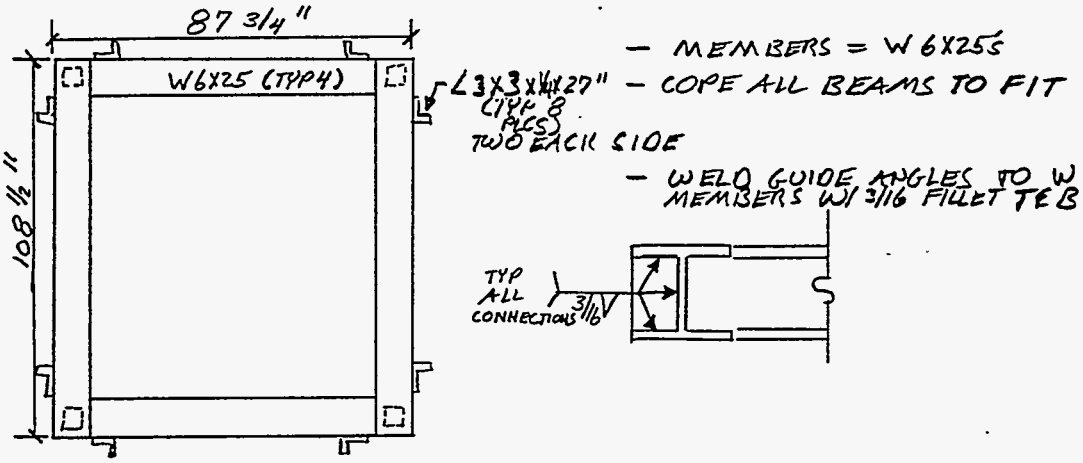


TOP PLATFORM

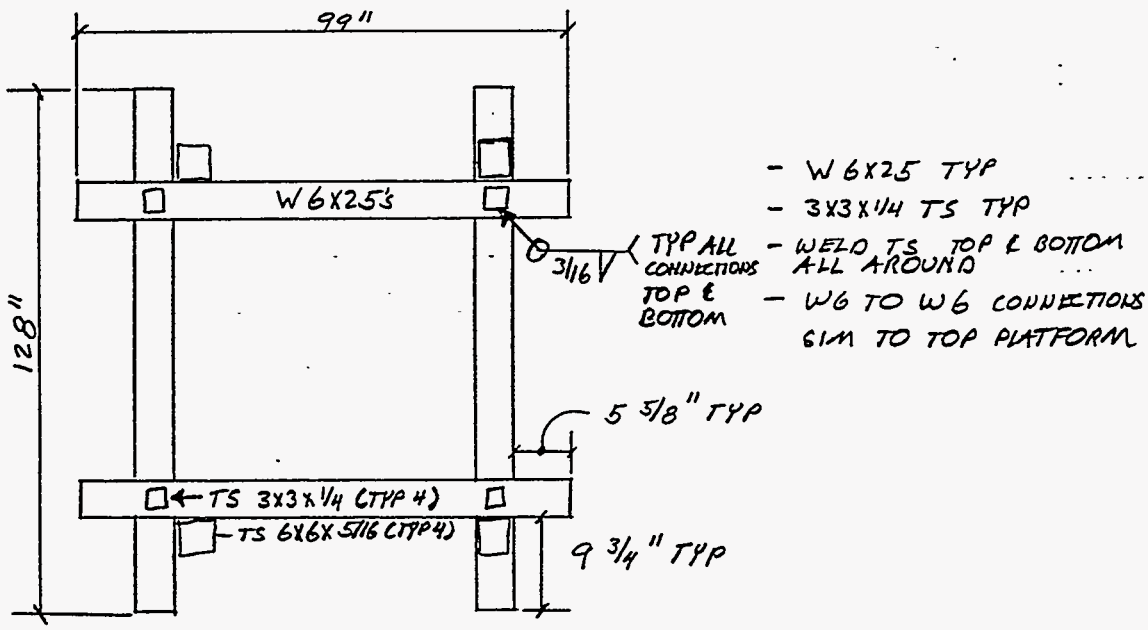


BOTTOM PLATFORM

# ANALYTICAL CALCULATIONS



Subject HEEL PIT SPOOL ASSEMBLY SUPPORT

Originator BF NORMAN Date 4-26-94

Checker [illegible] Date 5/9/94

7

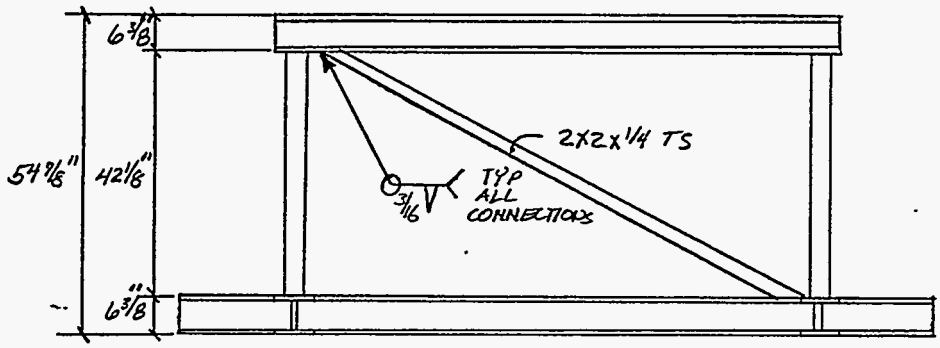


- 2X2X1/4 TS BRACING TYP 4 SIDES
- 3X3X1/4 TS
- W 6X25
- WELD 2X2 TS ALL AROUND TO W6X25's

SIDE VIEW

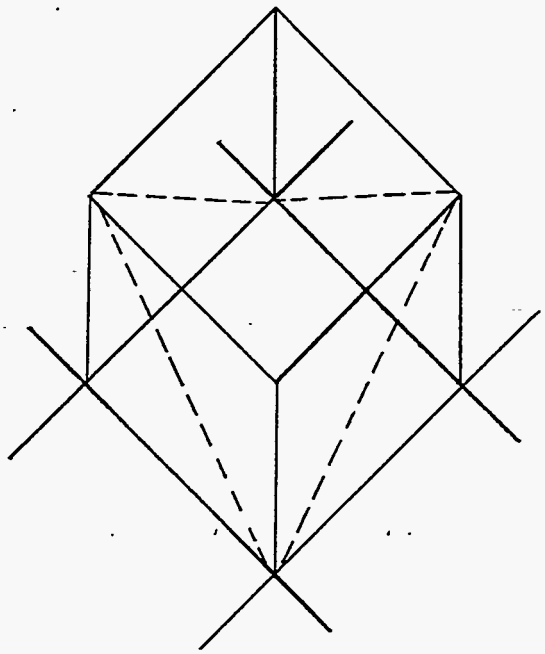

—— MAIN SUPPORTS

– – – CROSS BRACING

ORTHOGONAL VIEW OF BRACING

# APPENDIX B

# PUMP PIT SPOOL ASSEMBLY

# DESIGN CALCULATION

(1) Drawing H-2-83740 (2) Doc. No. _____ (3) Page 1 of 11
(4) Building _____ (5) Rev. _____ (6) Job No. _____
(7) Subject PUMP PIT SPOOL PIECE ASSEMBLY SUPPORT
(8) Originator BF NORMAN Date 5-10-94
(9) Checker JB Burgess Date 5/16/94

(10) OBJECTIVE: THE REQUIREMENTS FOR THIS CALCULATION CAME FROM DWGS H-2-820736 SH 1-4. WE WERE ASKED TO DESIGN A SUPPORT SYSTEM TO HOLD THE 241-CR-06A SPOOL PIECE ASSEMBLY. SKETCHES & CALCULATIONS CAN BE SEEN ON THE FOLLOWING PAGES. MEMBER SIZES FOR OUR SUPPORT CAN BE SEEN THROUGHOUT THIS CALCULATION. CRIBBING WILL BE FIELD INSTALLED AND OF SUFFICIENT QUANTITY TO PREVENT MOVEMENT OF SPOOL ASSEMBLY INSIDE CRATE WHILE BEING MOVED.

# DESIGN CALCULATION

(1) Drawing H-2-83740 (2) Doc. No. _____ (3) Page 2 of 11
(4) Building _____ (5) Rev. _____ (6) Job No. _____
(7) Subject PUMP PIT SPOOL PIECE ASSEMBLY
(8) Originator BF NORMAN Date 5-9-94
(9) Checker [illegible] Date 5/16/94

(10)

- NO WIND LOADS WILL BE SEEN BY SUPPORT WHILE IN CRATE, LOADS WILL BE SEEN BY SUPPORT WHILE STANDING OUTSIDE. (SEISMIC LOADS WILL GOVERN)
- 1.56 • ULTIMATE IN ALL DIRECTIONS WHILE BEING TRANSPORTED
- 1.25% OF ALLOWABLE IN ALL DIRECTIONS FOR LOADING
- ASSEMBLY WGT = 7,490 # + 3200 # FOR SUPPORT

  WGT = 9,690 #

  * FROM DSI DATED MARCH 24, 1994 FROM FRANK HUANG TO TOM MACKEY
- DIMENSIONS OF SUPPORT PLATFORM (H-2-820736 SH 1-4)

COMPARE YIELD TO ULTIMATE STRESSES

AISC ALLOWABLE

$F_y = 36{,}000$ LOAD = 9,690 (1.25)
LOAD = 12,112.5 #

STRESS % = 12,112.5/36,000 = 34 % ← GOVERNS

TRANSPORT ALLOWABLE

$F_u = 58{,}000$ LOAD = 9,690(1.5)
LOAD = 14,535

STRESS % = 14,535/58,000 = 25%

- AISC ALLOWABLE LOADS WILL GOVERN FOR DESIGN ANALYSIS.
- USE $F_y$ ALLOWABLES IN SUPPORT DESIGN

# DESIGN CALCULATION

(1) Drawing H-2-83740 (2) Doc. No. _____ (3) Page 3 of 11
(4) Building _____ (5) Rev. _____ (6) Job No. _____
(7) Subject PUMP PIT SPOOL PIECE ASSEMBLY
(8) Originator BF NORMAN Date 5-9-94
(9) Checker [illegible] Date 5/16/94

(10)

LOAD ANALYSIS

LOAD = 12,113 #
AREA OF PLATFORM = 186" X 66½ = 12,369 in²
= 85.90 ft²

PSF = 12,113/85.9 = 141 PSF

- LOADS WILL BE UNIFORMLY DISTRIBUTED TO PERIMETER SUPPORT MEMBERS.

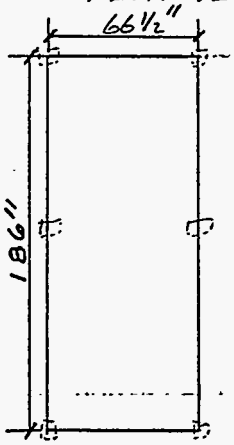


186" = 15.5'

- SINCE PUMP PIT SPOOL PIECE IS ITS OWN SELF SUPPORTING FRAME WHILE BEING LIFTED. WHEN RESTING ON OUR SUPPORT ASSEMBLY LOADS WILL BE TRANSFERED TO OUR COLUMN SUPPORTS. OUR SUPPORT MUST BE ABLE TO WITHSTAND SEISMIC LOADS.

- BREAK LOAD INTO 4 POINT LOADS ONE ON EACH SPAN (CONS, WE HAVE 6 SPANS)

LOAD/4 = 12,113/4 = 3,028#

MAXIMUM SPACING BETWEEN SUPPORTS = 7.75'

M = PL/4 = 3,028 (7.75)/4 = 5,867 '# = 70,401 "#

TRY W6X15 MEMBERS A = 4.43 Sx = 9.72 Sy = 3.11
I = 29.1

σ = M/S = 70,401/9.72 = 7,243 psi

σALL = .6 (36) = 21.6

USE W6X15 FOR TOP PLATFORM

# DESIGN CALCULATION

(1) Drawing H-2-83740 (2) Doc. No. _____ (3) Page 4 of 11
(4) Building _____ (5) Rev. _____ (6) Job No. _____
(7) Subject PUMP PIT SPOOL PIECE ASSEMBLY
(8) Originator BF NORMAN Date 5-9-94
(9) Checker [signature] Date 5/16/94

(10) CHECK BEAM CONNECTIONS

$R = P/2 = 3,028/2 = 1514\#$ $M = PL/8 = 2,933'\#$

$A_w = 2(2.875) + 4.75 = 10.5$

$S_w = bd + d^2/6 = 2.875(4.75) + (4.75)^2/6 = 17.42$

$f_1 = 1514/10.5 = 144$

$f_2 = 2,933(12)/17.42 = 2020$

$f_r = [(144)^2 + (2020)^2]^{1/2} = 2025$

$w_r = 2025/.707(21,000) = 0.14''$

$3/16 = 0.187$ ∴ OK

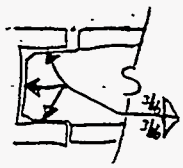


TRY 3/16" FILLET WELD

$F_w = .3(70)(.707)(3/16) = 2.78$ K/in

$2.78 > .624$ ∴ OK

USE 3/16 FILLET WELD 3 SIDES

CHECK VERTICAL DIMENSIONS & COLUMNS
(H-2-820736 SH 1-4)

- HEIGHT = 95 3/4" FROM BOTTOM OF SUPPORT STRUCTURE TO BOTTOM OF P-SEAL
- 3" CLEARANCE FROM BOTTOM OF CRATE

$95\ 3/4'' + 3 = 98\ 3/4''$

- USE W6X15.5 FOR TOP & BOTTOM SUPPORT STRUCTURE

$98\ 3/4 - 2(6) = 86.75''$ SAY 87"

- USE 3 COLUMN SUPPORTS EACH SIDE
- LOAD APPLIED @ TWO COLUMNS

$12,113/2 = 6,057\#$ PER COLUMN

- TRY 3X3X1/4 ST $A = 2.59$ $I = 3.16$ $S = 2.10$ $r = 1.10$

$KL/r = .65(87)/1.10 = 52$ (COMPARE TO A-36 PG 3-16 AISC 9th ed)

$F_a = 18.17$

$f_a = 6,057/2.59 = 2,339$ psi

$18.17 > 3.34$ ∴ OK

USE 3X3X1/4 TS FOR COLUMN SUPPORTS

# DESIGN CALCULATION

(1) Drawing H-2-83740 (2) Doc. No. _____ (3) Page 5 of 11
(4) Building _____ (5) Rev. _____ (6) Job No. _____
(7) Subject PUMP PIT SPOOL PIECE ASSEMBLY
(8) Originator BF NORMAN Date 5-9-94
(9) Checker [illegible] Date 5/16/94

(10) CHECK LATERAL BRACING

- BRACING WILL BE DESIGNED TO HANDLE ALL HORIZONTAL LOADS.
- ANALYSE WORST CASE TO DESIGN MEMBERS.
- MINIMAL BENDING LOADS WILL BE SEEN BY COLUMNS DUE TO CROSS BRACING

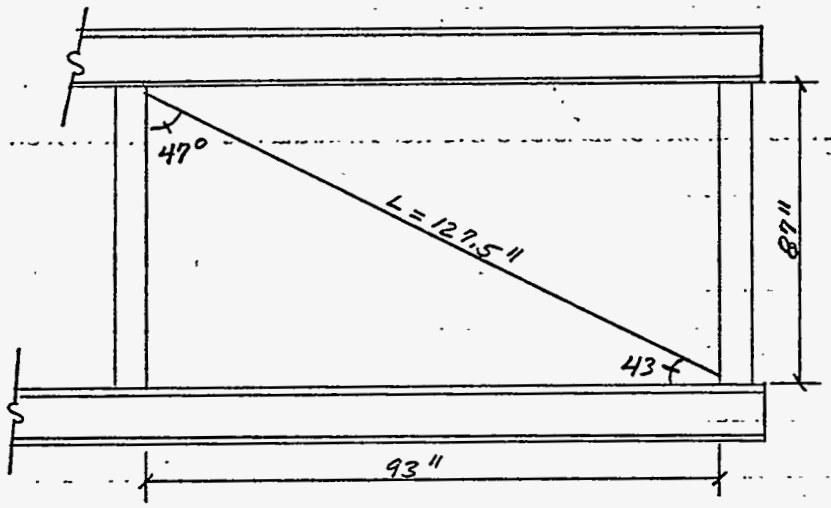


LOAD = 6,057# PER BRACING SUPPORT

FORCE IN MEMBER

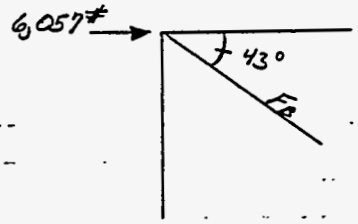


$F_B = 6{,}057 / \cos 43° = 8{,}282\#$

- TRY 2x2x1/4
SUPPORTS FIXED @ BOTH ENDS
$K = 0.65 \quad r = 0.69 \quad A = 1.59"$
$KL/r = (.65)(127.5)/0.69 = 120$
- COMPARE W/ A-36 STEEL (AISC p 3-16)
$120 = 10.28 = F_a$
$f_a = 8{,}282\#/1.59 = 5{,}209\ \#/in^2$
$10.28 > 5.21 \therefore$ OK

USE 2x2x1/4 TS FOR BRACING

- LATERAL BRACING WILL REDUCE OVERTURNING MOMENTS ON STRUCTURE, MOMENTS WILL BE MINIMAL ∴ OK FOR OVERTURNING.

# DESIGN CALCULATION

(1) Drawing H-2-83740 (2) Doc. No. _____ (3) Page 6 of 11
(4) Building _____ (5) Rev. _____ (6) Job No. _____
(7) Subject PUMP PIT SPOOL PIECE ASSEMBLY
(8) Originator BF NORMAN Date 5-9-94
(9) Checker [illegible] Date 5/16/94

(10)

WELD CHECK

- WELDS WILL SEE SHEAR LOADS ONLY
- MIN REQUIRED LENGTH OF WELD (3/16) TO RESIST SHEAR LOAD.

WELDS = (.70)(.3)(.707)(3/16) = 3,784

8,282 / 3,784 = 2.97"

- WELD 2 SIDES OF TUBE STEEL W/ 3/16 FILLET WELDS
  USE CLOSURE WELDS ON OTHER TWO SIDES

ANGLE SUPPORT STRUCTURE TO HOLD ASSEMBLY IN PLACE

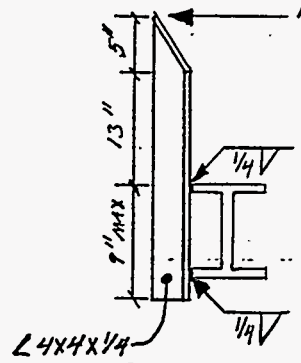


12,113# (10% PER SUPPORT) → SWAY LOAD SEEN BY SUPPORT IF BUMPED DURING LOADING F = 1,211

M = 1,211 (18") = 21,798

Fb = 21,600

S REQD = 21,798 / 21,600 = 1.01

TRY ANGLE 4X4X1/4
Sx = 1.05 A = 1.94

fb = 21,798 / 1.05 = 20,760 < 21,600 ∴ OK

Fv = .4 (Fy) = 14.4 Ksi

fa = P/A = 6,057 / 1.94 = 3,122 psi

14.4 > 3.1 ∴ OK

USE 4X4X1/4 L

L3X3X1/4
(21.6 · 1.33) = 28.72
SIDE LOAD INCREASE
fb = 21,798 / 1.930 = 23,439
28.72 > 23.44 ∴ OK
ALSO USE 3X3X1/4

- CHECK WELD

Sw = b · d = 4 · 6 = 24

fb = 21,798 / 24 = 908 psi

WELD REQUIRED 1/16th INCH
983 / 70(.3)(.707)(1/16) = 1.06" REQUIRED

USE 3/16" FILLET WELD TOP & BOTTOM OF W MEMBER

(1) Drawing H-2-83740 (2) Doc. No. _____ (3) Page 7 of 11
(4) Building _____ (5) Rev. _____ (6) Job No. _____
(7) Subject PUMP PIT SPOOL PIECE ASSEMBLY
(8) Originator B F NORMAN Date 5-10-94
(9) Checker [illegible] Date 5/16/94

(10)

- CHECK DIMENSIONS IF SPOOL ASSEMBLY IS NOT SQUARE

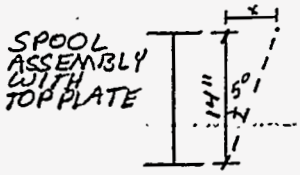


$X = 14 \tan \alpha = 1.22''$ USE 1.25" IN EACH DIRECTION

CHECK LIFTING LUGS & SUPPORT

WGT = 12,113/2 LUGS = 6,057 # (HANFORD SITE HOIST & RIGGING MANUAL)

- LIFTING LOCATIONS WILL BE POSITIONED NEAR THE 4 CORNERS.

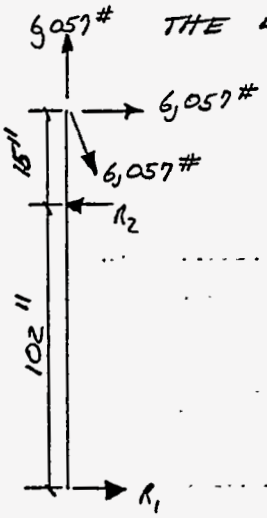


FORCE IN LUG @ 45° LIFTING ANGLE
6057 (1.414)*
= 8,566 #

* HANFORD HOIST & RIGGING MANUAL
USE HOIST = 9,000 # (MIN)

$R_1 = Pa/l = 890\#$

$R_2 = Pl(l/a) = 6,947\#$

$M_{MAX} = Pa = 90,855''\#$

$F_y = 1/3$ (YIELD) – WHEN LIFTING

$F_b = .33(46) = 15.33$ KSI

$S_{REQD} = 90,855/15,333$

$S = 5.92$

- DOUBLE S VALUE, WE HAVE BENDING IN TWO DIRECTIONS
$S = 11.85$ MIN

TRY 6X6X5/16

$S = 12.1 \quad A = 6.86 \quad r = 2.30$

$f_{bx} = 90,855/12.1 = 7,509$ psi

$f_{bz}$ = SAME = 7,509

$f_{ay} = 6057/6.86 = 883$ psi

$F_a = Kl/r$

$\frac{(1.2)(102)}{2.3} = 53$

COMPARE w/ A-36

$F_a = 18.08$

- CHECK COMBINED LOADS

$7,509/15.33 + 7509/15.33 + 883/18.08 = 1.02 > 1.0$

- JUST SLIGHTLY LARGER BUT WILL CLASSIFY AS OK SINCE WE ARE USEING 1/3 OF OUR ALLOWABLES

USE 6X6X5/16 TUBE STEEL

# DESIGN CALCULATION

(1) Drawing H-2-83740 (2) Doc. No. _____ (3) Page 8 of 11
(4) Building _____ (5) Rev. _____ (6) Job No. _____
(7) Subject PUMP PIT SPOOL PIECE ASSEMBLY SUPPORT
(8) Originator BF NORMAN Date 5-10-94
(9) Checker JS Burgess Date 5/16/94

(10) CHECK PLATE 7"x6½"x1" (WELDS ON 3 SIDES)

$M = PL/8 = 8{,}566(6)/8 = 6{,}424$ "#

$S$ PLATE $= 1/6(6)(1)^2 = 1.0$

$f_b = 6{,}424$ psi $\ll .33 F_y$ ∴ OK

– SHEAR LOADS VERY MINIMAL

CHECK WELDS & PLATE CONFIGURATION

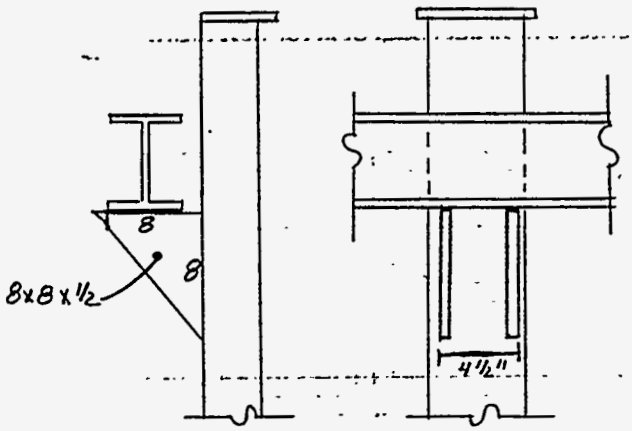


– CHECK WELDS ON TS

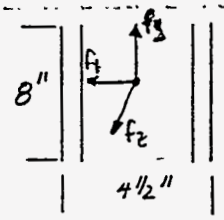


$S = 2(d^2/3) = 42.66$

$J_w = \frac{d(3b^2+d^2)}{6} = 166$

$A_w = 32$ "

$f_y = 6{,}057$ #/32" = 189

$f_x = 90{,}855(4)/166 = 2{,}189$ → TORSIONAL MOMENT CAN ALSO BE BROKEN DOWN INTO A FORCE COUPLE & SHEAR WOULD BE SEEN BY WELDS.

$f_z = 90{,}855/42.66 = 2{,}129$

$f_r = [(189)^2 + (2{,}189)^2 + (2{,}129)^2]^{1/2} = 3{,}059$

TRY ¼" FILLET WELD

$.707(21)(1/4) = 3{,}711$ #/in

3.7 > 3.1 ∴ OK USE ¼" WELDS

CHECK GUSSET PLATES

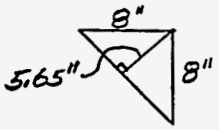


$S = 1/6\, b(h)^2 = 1/6(.5)(5.65)^2 = 2.66(2) = 5.32$

$f_b = 90{,}855/5.32 = 17{,}077$

$F_b = .6(36) = 21.6 > 17.08$ ∴ OK

– SHEAR WILL BE MINIMAL COMPARED TO ALLOWABLES

# DESIGN CALCULATION

(1) Drawing H-2-83740 (2) Doc. No. _____ (3) Page 9 of 11
(4) Building _____ (5) Rev. _____ (6) Job No. _____
(7) Subject PUMP PIT SPOOL PIECE ASSEMBLY SUPPORT
(8) Originator BF NORMAN Date 5-10-94
(9) Checker [illegible] Date 5/16/94

(10) - ADD TOP BRACE

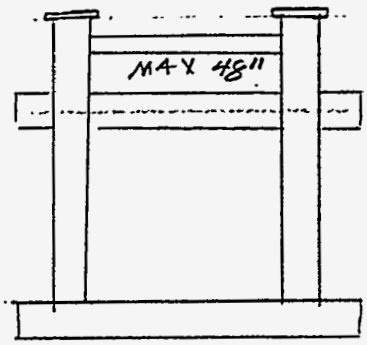


- TRY 2x2x1/4 TS

$f_a = P/A = 12{,}113 / 1.59$
$7{,}618$ psi

$f_a < F_a$ ∴ OK

LOADS ARE ALL COMPRESSION
- USE 3/16" FILLET WELD ALL AROUND BOTH ENDS
- TOP BRACE WILL ALSO RELIEVE SOME OF MOMENT SEEN BY 6x6 ST

- CHECK PUNCHING SHEAR AT TUBE FACE

$12{,}113 / 8(3/16) = 4{,}845$ #/in

$F_U = .4(46) = 18.4$ K/in

∴ OK FOR PUNCHING SHEAR.

- WELDS ON BOTTOM OF TS TO W MEMBERS

- SHEAR LOADS ONLY - 12" OF 1/4" WELD IS STRONG ENOUGH TO RESIST LOADINGS.

- CHECK END W 6X15 WITH LIFTING LOADS ADDED.

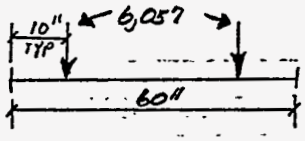


$R_1 = 6{,}057$
$M = P(a) = 6{,}057(10) = 60{,}570$
W6x15 $S_g = 3.11$
$f_b = 60{,}570/3.11 = 19{,}476$ psi

- IF NO VERTICAL END LOADS SEEN BY MEMBER THAN NO STIFFNERS REQUIRED.

# DESIGN CALCULATION

(1) Drawing H-2-83740 (2) Doc. No. _____ (3) Page 10 of 11
(4) Building _____ (5) Rev. _____ (6) Job No. _____
(7) Subject PUMP PIT SPOOL PIECE ASSEMBLY SUPPORT
(8) Originator RF NORMAN Date 5-11-94
(9) Checker [illegible] Date 5/16/94

(10)

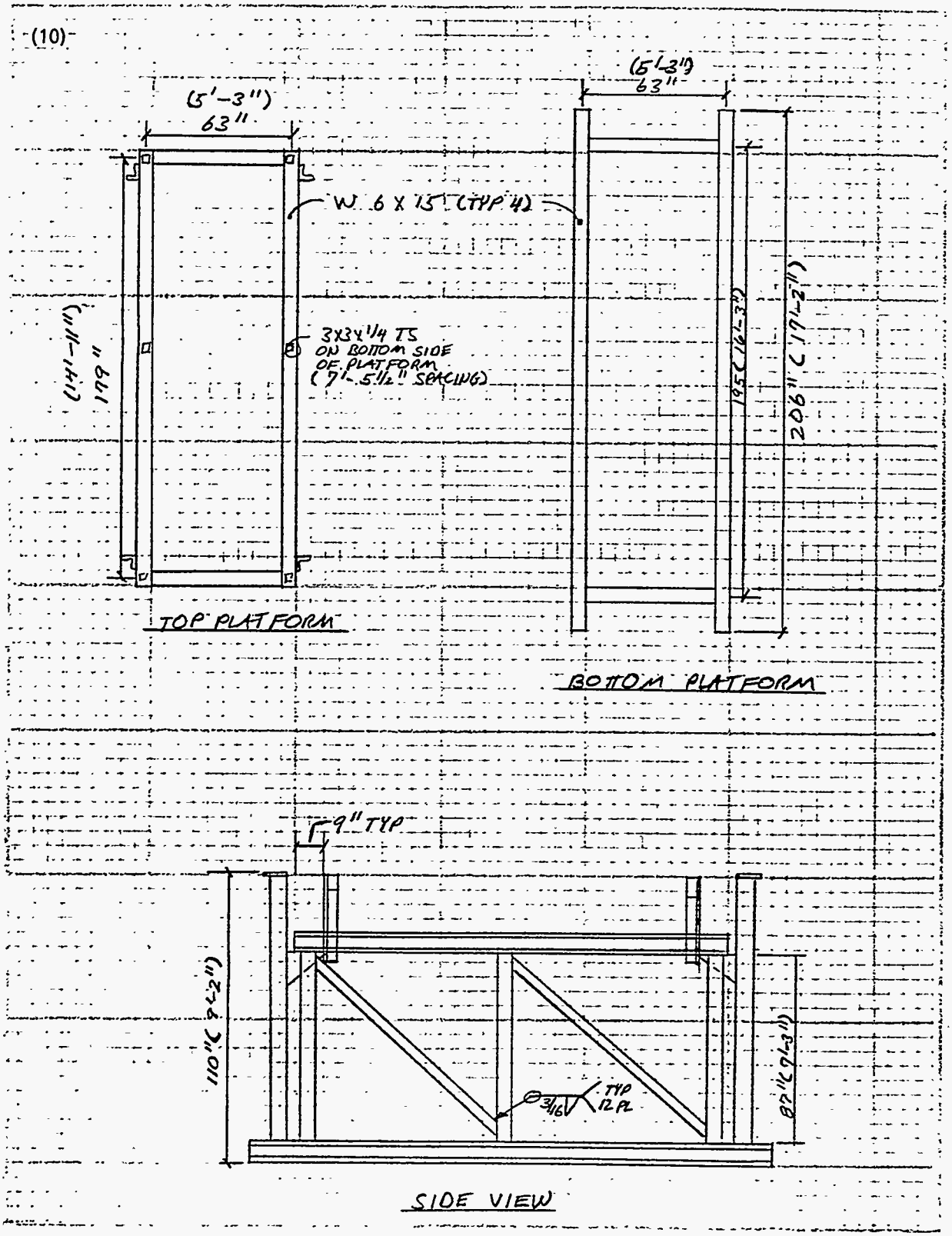




BD-6400-060.1 (12/87)

# DESIGN CALCULATION

(1) Drawing H-2-83740 (2) Doc. No. _____ (3) Page 11 of _____
(4) Building _____ (5) Rev. _____ (6) Job No. _____
(7) Subject PUMP PIT SPOOL PIECE ASSEMBLY SUPPORT
(8) Originator BF NORMAN Date 5-11-94
(9) Checker [illegible] Date 5/16/94

(10)

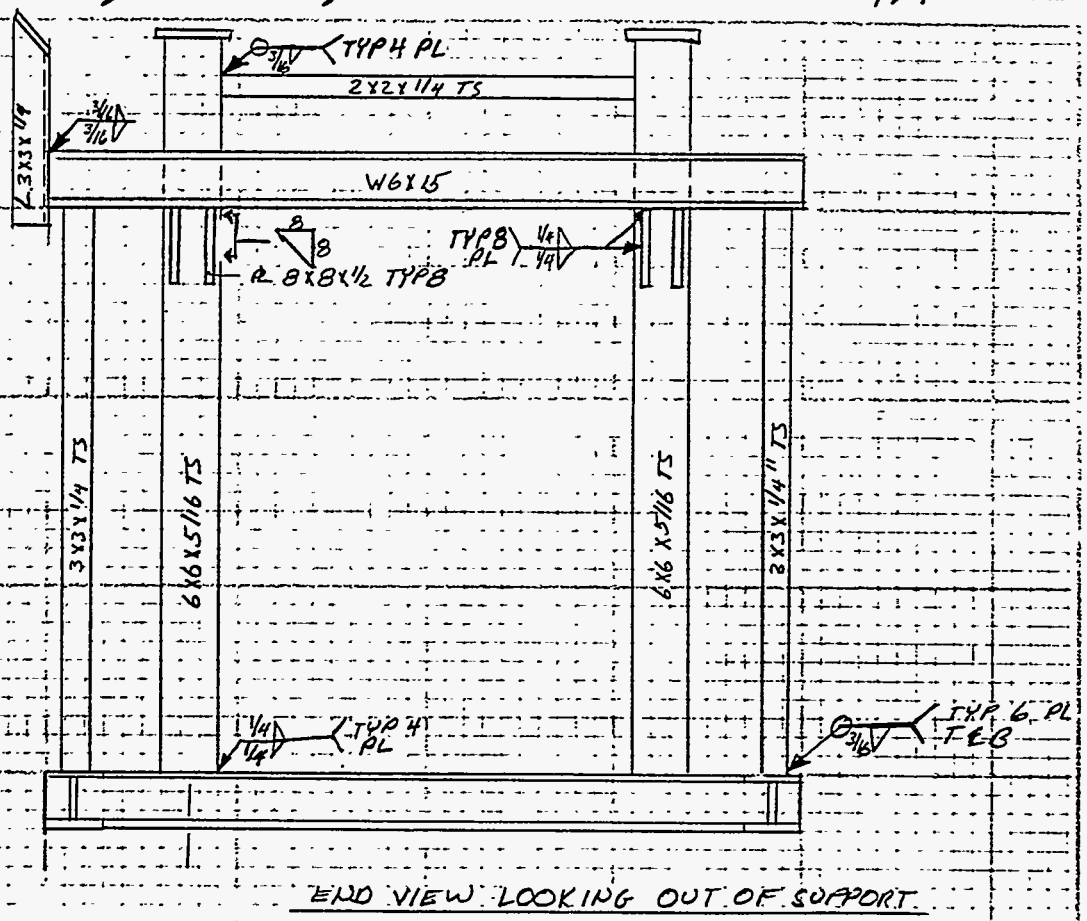


END VIEW LOOKING OUT OF SUPPORT

# APPENDIX C

## SLUICING PIT SPOOL ASSEMBLY

# ANALYTICAL CALCULATIONS



Subject SLUICING PIT SPOOL PIECE ASSEMBLY

Originator BF NORMAN Date 5-19-94

Checker JS BURGESS Date 5-23-94

OBJECTIVE: WE WERE ASKED TO DESIGN & ANALYSE THE SLUICING PIT SUPPORT SPOOL ASSEMBLY. THIS PIECE OF EQUIPMENT WILL BE USED TO HOLD THE SPOOL PIECE WHILE AT THE FABRICATION SHOP AND ALSO IN A PACKING CRATE. SEE CALCULATION FOR MEMBER SIZES & CONCLUSIONS. CRIBBING WILL BE FIELD INSTALLED AND OF SUFFICIENT QUANTITY TO PREVENT MOVEMENT OF SPOOL ASSEMBLY INSIDE CRATE WHILE BEING MOVED.

# DESIGN CALCULATION

(1) Drawing _____ (2) Doc. No. _____ (3) Page 2 of 10
(4) Building _____ (5) Rev. _____ (6) Job No. _____
(7) Subject SLUICING PIT SPOOL PIECE ASSEMBLY
(8) Originator BF NORMAN Date 5-19-94
(9) Checker [illegible] Date 5/23/94

(10)
- NO WIND LOADS WHILE STRUCTURE IS IN BOX, BUT WIND LOADS WILL BE SEEN BY SUPPORTS WHILE OUTSIDE (SEISMIC LOADS WILL GOVERN)
- 1.5G • ULTIMATE IN ALL DIRECTIONS WHILE BEING TRANSPORTED
- 1.25% OF ALLOWABLE IN ALL DIRECTIONS FOR LOADING
- ASSEMBLY WGT = 10,815#
  FROM DSI DATED MARCH 24, 1994 FROM FRANK HUANG TO TOM MACKEY
- DIMENSIONS OF SUPPORT PLATFORM (H-2-820735 SH 1-5)

COMPARE YIELD TO ULTIMATE STRESSES

AISC ALLOWABLE
Fy = 36,000 LOAD = 10,815 (1.25)
LOAD = 13,519#
STRESS % = 13,519/36,000 = 37.5% ← GOVERNS

TRANSPORT ALLOWABLE
Fu = 58,000 LOAD = 10,815 (1.5)
LOAD = 16,223#
STRESS % = 16,223/58,000 = 27.9%

- AISC ALLOWABLE LOADS WILL GOVERN FOR DESIGN ANALYSIS.
- USE Fy ALLOWABLES IN SUPPORT DESIGN

# DESIGN CALCULATION

(1) Drawing _____ (2) Doc. No. _____ (3) Page 3 of 10
(4) Building _____ (5) Rev. _____ (6) Job No. _____
(7) Subject SLUKING PIT SPOOL PIECE ASSEMBLY
(8) Originator RF NORMAN Date 5-19-94
(9) Checker [illegible] Date 5/23/94

(10) LOAD ANALYSIS (SEE SKETCHES PGS

LOAD = 13,519 #

AREA OF PLATFORM = 120 in x 96" = 80 ft²

PSF = 13,519/80 = 169 PSF

- ASSUME LOAD IS DISTRIBUTED TO SIDE SUPPORTS

4' TRIBUTARY LENGTH = 4(169) = 676 #/LN.FT.

- LONGEST LEG = 10' LONG

UNIFORM $M = wL^2/8 = 676(10)^2/8 = 8,450$ '#

LOAD @ 4 POINTS = 13,519/4 = 3,380 #

$M = PL/4 = 3,380(10)/4 = 8,450$ '#

- TRY W6X15

A = 4.43 Sx = 9.72 rx = 2.56

Fb = M/S = 8,450(12)/9.72 = 10,432 psi

Fb = .6(36) = 21.6 (REF)

21.6 > 10.4 ∴ OK

USE W6X15 FOR TOP PLATFORM

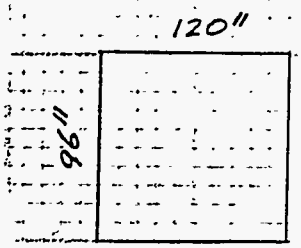


OUTSIDE DIMENSIONS OF PLATFORM

- CHECK WELDS OF W CONNECTIONS

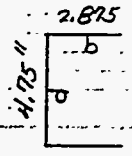


R = 3380/2 = 1,690 #

M = PL/8 = 4,225 '#

Aw = 2(2.875) + 4.75 = 10.5

Sw = bd + d²/1 = 17.42

f1 = 1,690 #/10.5 = 161

f2 = 4,225(12)/17.42 = 2,910

fr = [(161)² + (2,910)²]^1/2 = 2,914

Wr = 2,914/.707(21,000) = 0.196

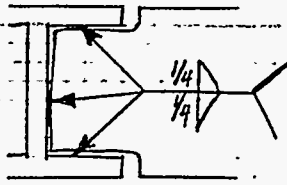


TYP ALL CONNECTIONS

USE 1/4" FILLET WELDS 2 SIDES

# DESIGN CALCULATION

(1) Drawing _____ (2) Doc. No. _____ (3) Page 4 of 10
(4) Building _____ (5) Rev. _____ (6) Job No. _____
(7) Subject SLUICING PIT SPOOL PIECE ASSEMBLY
(8) Originator BF NORMAN Date 5-19-94
(9) Checker [illegible] Date 5/23/94

(10) CHECK VERTICAL DIMENSIONS & COLUMNS

(H-2-820735 SH 1-5)

- HEIGHT = 109" FROM BOTTOM OF SUPPORT TO BOTTOM OF P-SEAL

- 3" CLEARANCE FROM BOTTOM OF CRATE

109 + 3 = 112"

- USE W 6X15 T&B SUPPORT STRUCTURE

112 − 2(6) = 100"

- USE 4 COLUMN SUPPORTS ONE AT EACH CORNER

- LOAD APPLIED AT 2 COLUMNS ONLY

13,519 / 2 = 6,760 #

- TRY 3X3 X 1/4 A = 2.59 I = 3.16 r = 1.10 S = 2.10

Kl/r = .65 (100) / 1.10 = 59

(COMPARE TO A-36 STEEL PG 3-16 AISC 9th ed)

Fa = 17.53

fa = 6,760 / 2.59 = 2,610 psi

17.53 > 2.6 ∴ OK

- ANY LATERAL LOADS SEEN BY COLUMNS WILL BE TRANSFERED TO THE BOTTOM SUPPORT VIA CROSS BRACING

USE 3X3X1/4 TS FOR COLUMNS

# DESIGN CALCULATION

(1) Drawing _____ (2) Doc. No. _____ (3) Page 5 of 10
(4) Building _____ (5) Rev. _____ (6) Job No. _____
(7) Subject SLUICING PIT SPOOL PIECE ASSEMBLY
(8) Originator BF NORMAN Date 5-19-94
(9) Checker [illegible] Date 5/23/94

(10) CHECK LATERAL BRACING

- BRACING WILL BE DESIGNED TO HANDLE ALL HORIZONTAL LOADS
- ANALYSE WORST CASE FOR MEMBER DESIGN
- USE 50% OF DL AS HORIZONTAL FORCE.

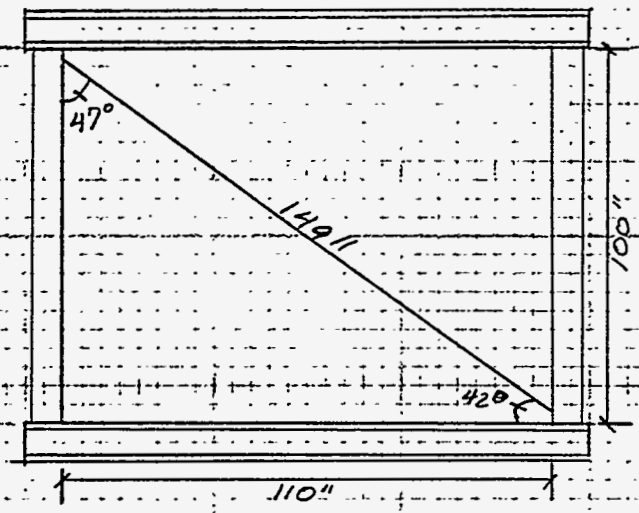


FORCE IN MEMBER

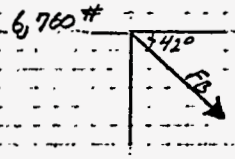


$F_B = 6{,}760/\cos 42° = 9{,}096$
TRY 2X2X1/4 TS $r = 0.69$ $A = 1.59$
FIXED @ BOTH ENDS
$KL/r = .65(149)/0.69 = 140$
COMPARE W/ A-36 STEEL
$F_a = 7.62$
$f_a = 9{,}096/1.59 = 5{,}721$
$7.62 > 5.7$ ∴ OK
USE 2X2X1/4 TS FOR BRACING

WELD CHECK
- WELDS WILL SEE SHEAR LOADS ONLY
3/16 FILLET = 3784 #/in resisting
$9096/3784 = 3.26''$
- WELD ALL AROUND TS CONNECTION

- BRACING WILL TRANSFER LATERAL LOADS TO GROUND LEVEL, ∴ MINIMAL OVERTURNING MOMENTS ∴ OK.

# DESIGN CALCULATION

(1) Drawing _____ (2) Doc. No. _____ (3) Page 6 of 10
(4) Building _____ (5) Rev. _____ (6) Job No. _____
(7) Subject SLUICING PIT SPOOL PIECE ASSEMBLY
(8) Originator RF NORMAN Date 5-19-94
(9) Checker [illegible] Date 5/23/94

(10) ANGLE SUPPORT STRUCTURE TO HOLD (GUIDE) ASSEMBLY

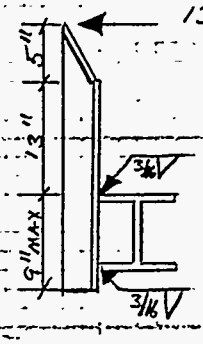


13,519 − 3200 # WGT OF ASSEMBLY = 11,319
10% IMPACT SIDE LOAD F = 1,132

M = 1,132 (18) = 20,376

Fb = 21,600
S REQD = 0.943

TRY ANGLE 3X3 X 1/4 A = 1.44 S = .930

fb = M/S = 20,376/.93 = 21,909 > 21.6 (REF)
− CLOSE TO ALLOWABLE PLUS IT IS ONLY BEING USED AS A GUIDE TO SETTLE SPOOL ASSEMBLY ∴ OK

FV = 14.4

fv = 6,760/1.44 = 4,694 #

14.4 > 4.69 ∴ OK

USE 3X3 X 1/4 ANGLE

CHECK WELD

Sw = b·d = 3×6 = 18

fb = 20,376/18 = 1,132

wr = 1,132/.707 (21,000) = 0.08"

USE 3/16 FILLET T & B OF ANGLE

ADD 1.25" IN ALL DIRECTIONS TO ACCOUNT FOR A 5° OUT OF SQUARE TOLERANCE

# DESIGN CALCULATION

(1) Drawing _____ (2) Doc. No. _____ (3) Page 7 of 10
(4) Building _____ (5) Rev. _____ (6) Job No. _____
(7) Subject SLUICING PIT SPOOL PIECE ASSEMBLY
(8) Originator BF NORMAN Date 5-19-94
(9) Checker [illegible] Date 5/23/94

(10) CHECK LIFTING LUGS & SUPPORT

WGT = 13,519 #/2 = 6,760 # (2 LUGS HANFORD HOIST & RIGGING MANUAL)

- LIFTING LOCATIONS LOCATED NEAR THE 4 CORNERS

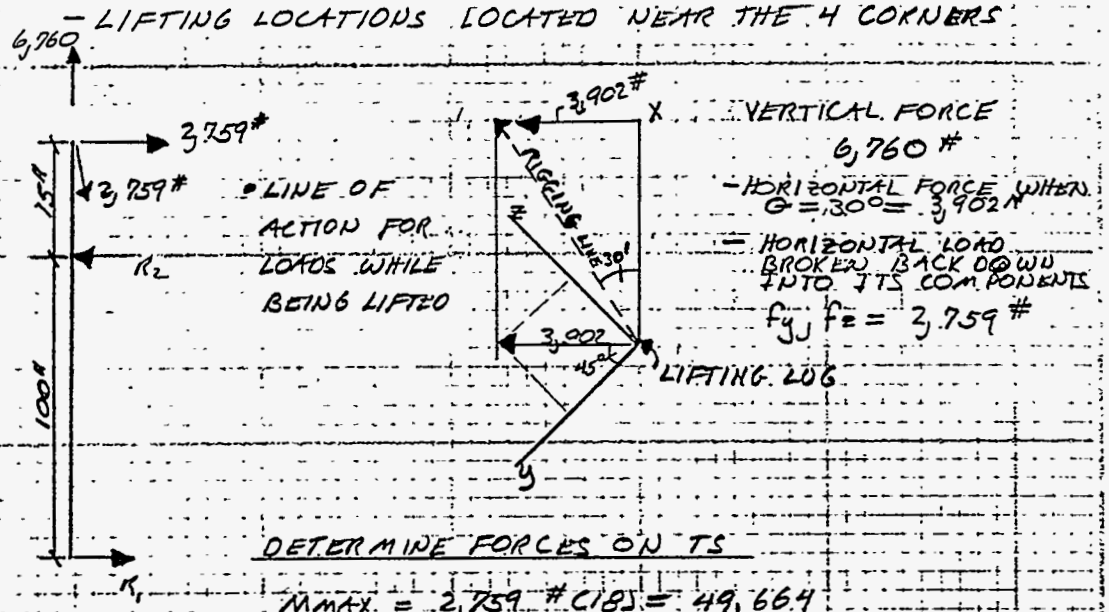


DETERMINE FORCES ON TS

MMAX = 3,759 # (18) = 49,664

Fb = 15.33 KSI (1/3 OF ALLOWABLE)

S REQD = 3.24

NEED TO DOUBLE SINCE LOAD IN 2 DIRECTIONS

S REQD = 6.47

TRY 6X6X5/16

S = 12.1 A = 6.86 r = 2.30

$f_{bx}$ = 49,664/12.1 = 4,105 psi

$f_{by}$ = SAME = 4,105 psi

$f_{ry}$ = 6,760/6.86 = 985 psi

$Kl/r$

$\frac{(1.2)(100)}{2.3}$

= 52

AISC A-36

$F_a$ = 18.08

CHECK COMBINED LOADS

4,105/15.33 + 4,105/15.33 + 985/18.08 = 0.59 < 1.0 ∴ OK

USE 6X6X5/16 TS

# DESIGN CALCULATION

(1) Drawing _____ (2) Doc. No. _____ (3) Page 8 of 10
(4) Building _____ (5) Rev. _____ (6) Job No. _____
(7) Subject SLUICING PIT SPOOL ASSEMBLY
(8) Originator BF NORMAN Date 5-19-94
(9) Checker [illegible] Date 5/23/94

(10) CHECK PLATE 7" x 7" x 1" THK

$M = PL/8 = 6{,}760\ (1.155)\ (6)/8 = 5{,}653$ "#

$S_{pl} = 1/6\ 6(1)^2 = 1.0$

$f_b = M/S = 5{,}653$ psi $<$ .75 $F_b$ (REF)

∴ OK USE 7"x7"x1" PL

CHECK WELDS & PLATE CONFIGURATION

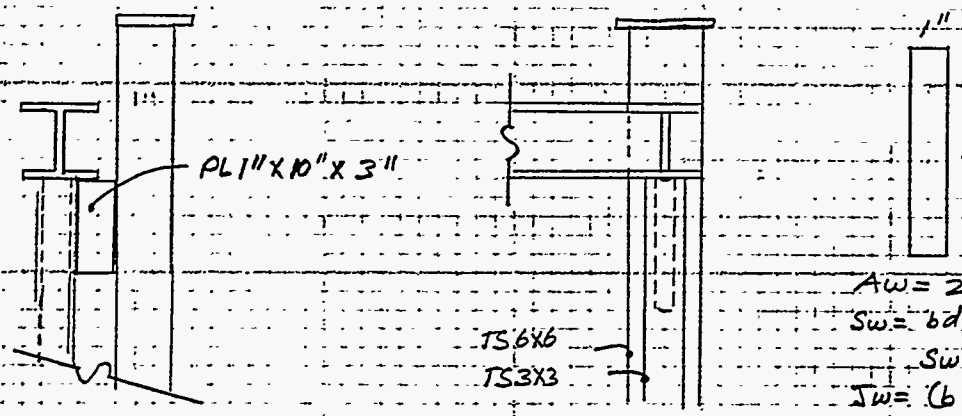


$A_w = 22$"

$S_w = bd + d^2/3$

$S_w = 43.33$

$J_w = (b+d)^3/6$

$J_w = 221.8$

$f_y = 6{,}760 / 22" = 307$

$f_x = 49{,}664\ (5) / 221.8 = 1{,}119$

$f_z = 49{,}664 / 43.33 = 1{,}146$

$f_r = [(307)^2 + (1{,}119)^2 + (1{,}146)^2]^{1/2}$

$f_r = 1{,}630$

$\omega_r = \frac{1630}{(.707)(21K)} = .1098$

USE 1/4" WELDS

# DESIGN CALCULATION

(1) Drawing _____ (2) Doc. No. _____ (3) Page 9 of 10
(4) Building _____ (5) Rev. _____ (6) Job No. _____
(7) Subject SLUICING PIT SPOOL ASSEMBLY
(8) Originator B F NORMAN Date 5-19-94
(9) Checker [illegible] Date 5/23/94

(10)

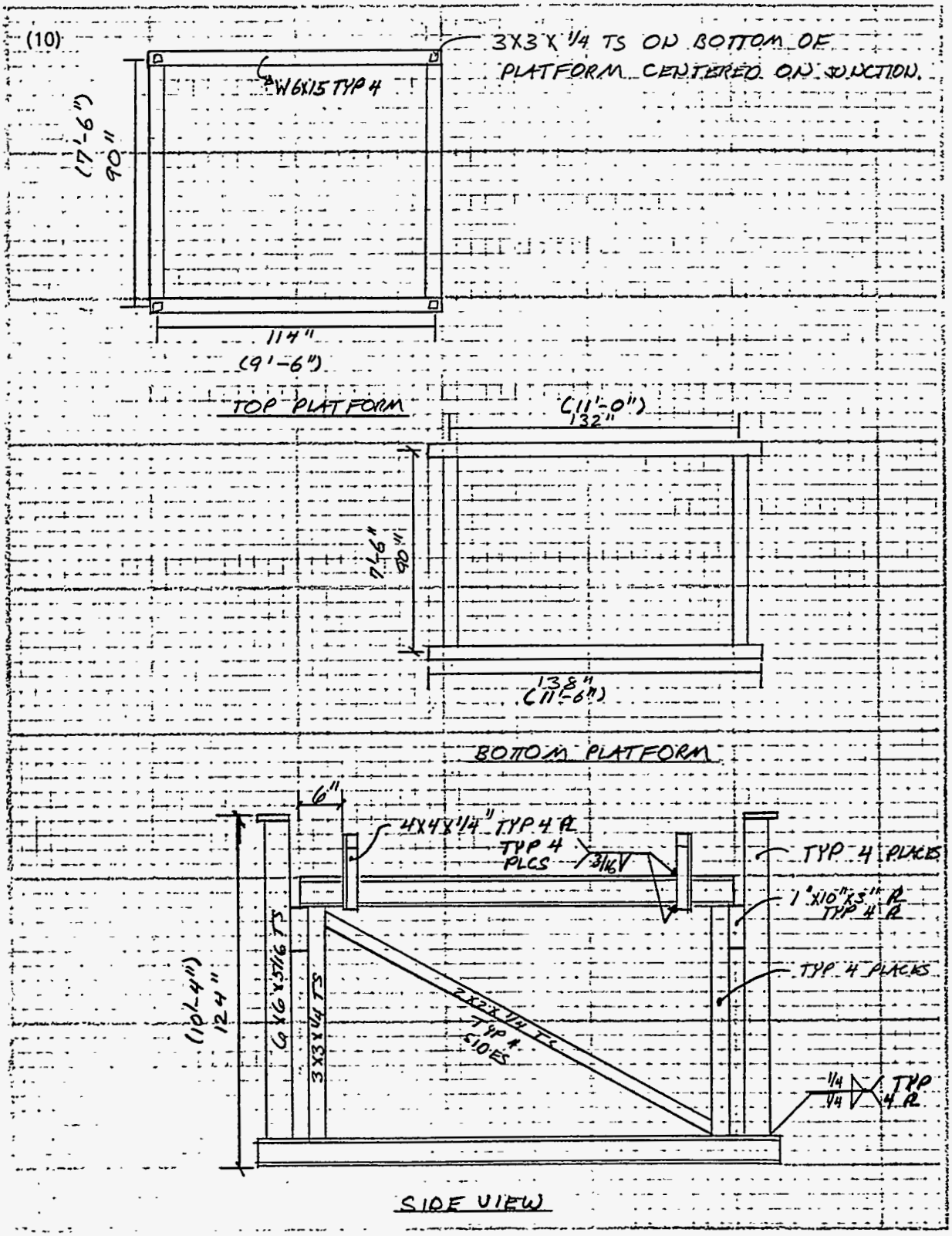




BD-6400-060.1 (12/87)

# DESIGN CALCULATION

(1) Drawing _____ (2) Doc. No. _____ (3) Page 10 of 10
(4) Building _____ (5) Rev. _____ (6) Job No. _____
(7) Subject SLUICING PIT SPOOL ASSEMBLY
(8) Originator BF NORMAN Date 5-19-94
(9) Checker [illegible] Date 5/23/94

(10)

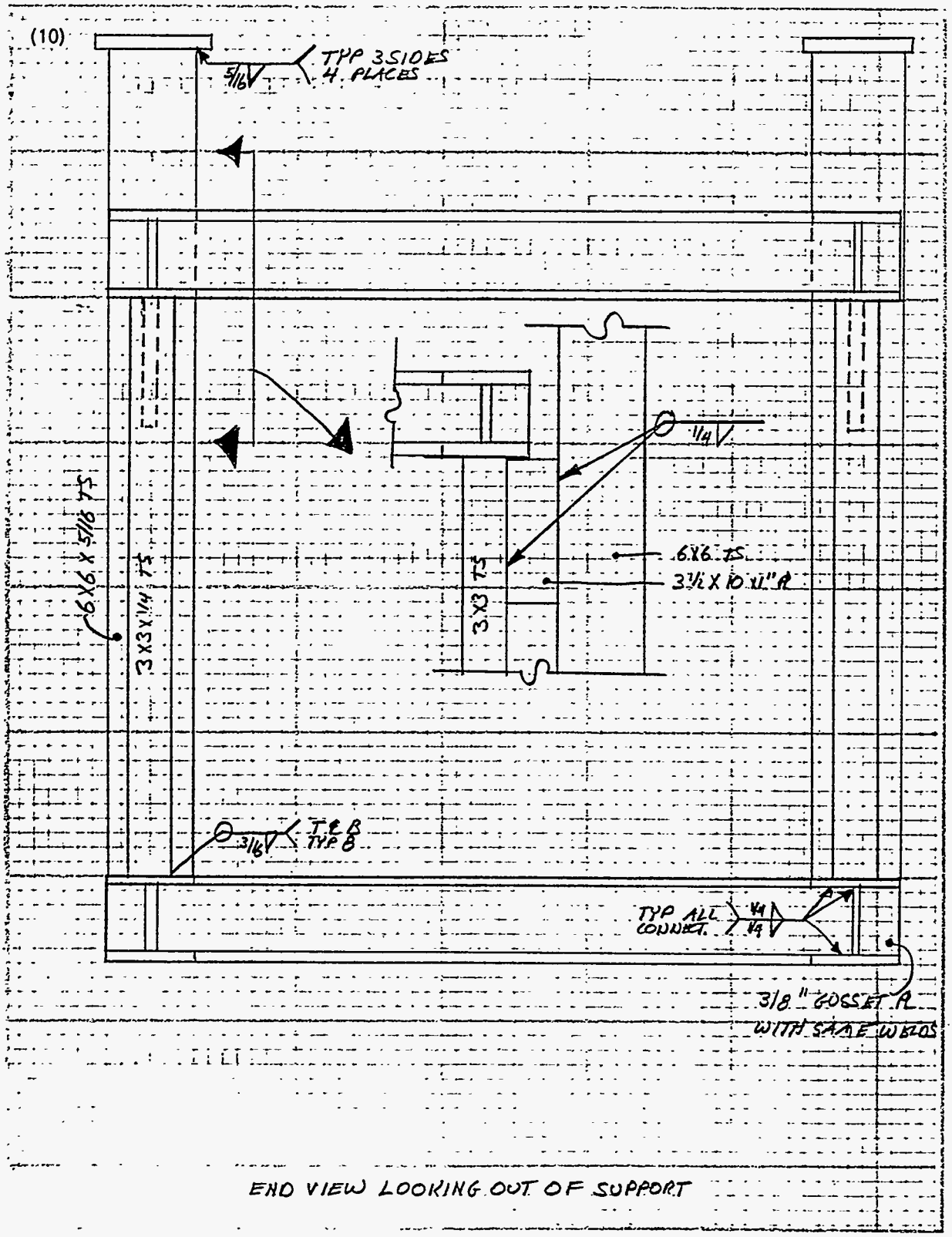


END VIEW LOOKING OUT OF SUPPORT

# APPENDIX D

## BOX SIZES FOR ASSEMBLIES

# DESIGN CALCULATION

(1) Drawing H-2-820735, Rev. 0 (2) Doc. No. _____ (3) Page 1 of 13
(4) Building _____ (5) Rev. _____ (6) Job No. _____
(7) Subject WEIGHT AND BOX SIZE for SLUICING PIT ASSEMBLY AND CAISSON
(8) Originator FH Huang Date 3-10-94
(9) Checker A.H. ZIADA Date 3-22-94

(10)

SLUICING PIT 241-AY-02B
SPOOL PIECE

ASSEMBLY

WEIGHT OF PLATE

$$W_p = \left[120 \times 96 - \frac{\pi}{4}(44.25)^2 - \frac{\pi}{4}(4)^2 \times 4\right] \times 1.5 \times 0.284$$

$$= 4231 \#$$

WEIGHT OF C12 X 20.7

$$W_c = [96 \times 2 + (120 - 6) \times 2] \times 20.7/12$$

$$= 724.5$$

WEIGHT OF W12X40

$$W_w = (138 + 120 + 144 \times 2) \times 40/12$$

$$= 1820 \#$$

WEIGHT OF GUSSET

$$W_g = 16 \times (3.5 \times 8 \times 0.5) \times 0.284$$

$$= 63.6 \#$$

WEIGHT OF LIFTING HOOK

$$W_h = 4 \times 5 = 20 \#$$

WEIGHT OF RESTRAINTS (W 8 X 31)

$$12 \times 8 \times 31/12 = 248 \#$$

TOTAL WEIGHT OF PLATFORM PLUS RESTRAINT

$$\therefore W_T = 4231 + 614.1 + 1820 + 63.6 + 20 + 248$$

$$= 7107 \text{ lb}$$

# DESIGN CALCULATION

(1) Drawing H-2-820735, Rev.0 (2) Doc. No. _____ (3) Page 2 of 13
(4) Building _____ (5) Rev. _____ (6) Job No. _____
(7) Subject WEIGHT AND BOX SIZE for SLUICING PIT ASSEMBLY AND CAISSON
(8) Originator FH Huang Date 3-10-94
(9) Checker A.H. ZIAVA Date 3-22-94

(10)

BOX SIZE for PLATFORM :

12'-2" x 11'-8" x 2'-3" high

CAISSON (241-AY-02B)

WEIGHT OF FLANGE

$W_{F1} = \frac{\pi}{4}(53^2 - 44.5^2) \times 0.75 \times 0.284$

$= 138.6$ #

$W_{F2} = \frac{\pi}{4}(49.5^2 - 44.5^2) \times 0.38 \times 0.284$

$= 39.8$ #

WEIGHT OF PIPE

$W_P = \frac{\pi}{4}(45.0^2 - 44.5^2) \times 93.18 \times 0.284$

$= 930.1$ #

WEIGHT OF Tubing + Small plate

$W_u = \frac{\pi}{4}[1.25^2 - (7/8)^2] \times 5.25 \times 0.284 \times 4$

$= 3.7$ #

$W_e = 2 \times 3 \times 0.25 \times 4 \times 0.284 + 30 \times 2 \times 0.25 \times 0.284 \times 2$

$= 9.7$ #

TOTAL WEIGHT

$W_{TOT} = 138.6 + 39.8 + 930.1 + 3.7 + 9.7$

$= 1{,}122$ lb

BOX SIZE (MINIMUM) FOR CAISSON ONLY

5'-2" DIA. x 7'-10"

# DESIGN CALCULATION

(1) Drawing H-2-820735, Rev. 0 (2) Doc. No. _____ (3) Page 3 of 13
(4) Building _____ (5) Rev. _____ (6) Job No. _____
(7) Subject _____
(8) Originator FH Hrans Date 3-16-94
(9) Checker A.H. ZIADA Date 3-22-94

(10)

SPRAYRING (241-AY-02B)

WEIGHT OF PIPE (16" high)

$W_p = \frac{\pi}{4}(45.0^2 - 44.5^2) \times 16 \times 0.284$

$= 159.7$ #

WEIGT OF spray pipe

$W_s = \pi(48) \times 9/12 = 113$ #

WEIGHT OF GUSSET

$W_g = 12\,3/8 \times 4 \times \frac{2}{3} \times 0.25 \times 8 \times 0.284$

$= 18.7$ #

WEIGHT OF RISER

$W_R = 103.75 \times 9/12 = 77.8$ #

Add 20% for discrepancies

$W_R = 77.8 \times 1.2 = 93.4$ #

TOTAL WEIGHT

$W_T = 159.7 + 113 + 18.7 + 93.4$

$= 385$ #

BOX SIZE OF SPRAYRING plus CAISSON

5'-6" DIA. x 11'-4" (103.75+12+8+12=136")

TOTAL BOX SIZE OF PLATFORM, CAISSON, AND SPRAYKING

12'-2" x 11'-8" x 11'-4" HIGH

TOTAL WEIGHT OF PLATFORM, CAISSON, AND SPRAYKING

$W_{TOT} = 7107 + 1122 + 385 = 8615$ lb.

# DESIGN CALCULATION

(1) Drawing H-2-820728 Rev.0 (2) Doc. No. _____ (3) Page 4 of 13
(4) Building H-2-820736, Rev. 0 (5) Rev. _____ (6) Job No. _____
(7) Subject WEIGHT and BOX SIZE OF SHIELDED WORK PLATFORM (CR-06A)
(8) Originator EH Huang Date 3-14-94
(9) Checker A.H. ZIABA Date 3-22-94

(10)

SHIELDED WORK PLATFORM (241-CR-06A)

WEIGHT OF TOP PLATE

$$W_p = [(186 \times 78) - \tfrac{\pi}{4}(4)^2] \times 1.5 \times 0.284$$
$$= 6175\#$$

WEIGHT OF W12 x 35, width = 6.5"

$$W_W = (204 + 67 \times 2 + 42 \times 2 + 80 \times 2 + 77.25 \times 2 + 80 \times 2) \times 35/12$$
$$= 2614.8\#$$

WEIGHT OF SIDE PLATE plus LIFTING HOOK

$$W_S = 6.5 \times 12.5 \times 0.5 \times 8 \times 0.284 + 5 \times 3$$
$$= 107.3\#$$

WEIGHT OF RESTRAINT

$$W_R = (8.5 \times 6.5 \times 0.5 \times 0.284 + \frac{10.75}{12} \times 15)4 = 85\#$$

TOTAL WEIGHT

$$W_T = 6175 + 2614.8 + 107.3 + 85$$
$$= 8982\ lb.$$ ONE PLATFORM

BOX SIZE (MINIMUM)

HEIGHT: 12.5 + 1.5 + 13 = 27"

$$(204 + 2) \times (78 + 13 + 0.5 - 3.25 + 2)$$
$$= 206'' \times 90.25''$$
$$= (17'-2'') \times (7'-9'')$$

SIZE: (17'-2") x (7'-9") x (2'-3") high

* THE SECOND PLATFORM HAS THE SAME SIZE AS THIS ONE

# DESIGN CALCULATION

(1) Drawing H-2-820736 Rev. 0 (2) Doc. No. _____ (3) Page 5 of 13
(4) Building _____ (5) Rev. _____ (6) Job No. _____
(7) Subject WEIGHT and BOX SIZE of SPOOL PIECE ASSEMBLY (CR-06A)
(8) Originator Fit Huang Date 3-14-94
(9) Checker Ali. ZIADA Date 3-22-94

(10)

SPOOL PIECE ASSEMBLY (241-CR-06A)

WEIGHT OF PLATFORM

WEIGHT OF TOP PLATE

$$W_p = [60 \times 186 - \frac{\pi}{4}(38.25)^2 - \frac{\pi}{4}(4)^2 \times 2] \times 1.5 \times 0.284$$

$$= 9985.8 \times 1.5 \times 0.284$$

$$= 4254 \#$$

WEIGHT OF W12x35, 6.5" wide

$$W_W = [204 \times 2 + (60 - 0) \times 4] \times 35/12$$

$$= 1890 \#$$

WEIGHT OF SIDE PLATE

$$W_S = 6.5 \times 12.5 \times 0.5 \times 4 \times 0.284$$

$$= 46.3 \#$$

WEIGHT OF Hook + Restraint

$$W_h = 5 \times 3 + 85 = 100 \#$$

TOTAL WEIGHT

$$W_T = 4254 + 1890 + 46.3 + 100$$

$$= \underline{6290 \text{ lb.}}$$

BOX SIZE (MINIMUM)

$$(204 + 2) \times (60 + 6.5 + 1.5)$$

$$= (17'-2") \times (5'-8")$$

$$\underline{(17'-2") \times (5'-8") \times 2'-3" \text{ high.}}$$

# DESIGN CALCULATION

(1) Drawing H-2-820736, Rev. 0 (2) Doc. No. _____ (3) Page 6 of 13
(4) Building _____ (5) Rev. _____ (6) Job No. _____
(7) Subject WEIGHT and BOX SIZE OF SPOOL PIECE ASSEMBLY (CR-06A)
(8) Originator FH Huang Date 3-14-94
(9) Checker A.H. ZIADA Date 3-22-94

(10)

CAISSON (241-CR-06A)

No weight of top or bottom plate is added.

WEIGHT OF FLANGE

$$W_{F_1} = \frac{\pi}{4}(47^2 - 38.5^2) \times 0.75 \times 0.284$$
$$= 121.6\#$$

$$W_{F_2} = \frac{\pi}{4}(43.5^2 - 38.5^2) \times 0.38 \times 0.284$$
$$= 34.8\#$$

WEIGHT OF PIPE

$$W_p = \frac{\pi}{4}(39^2 - 38.5^2) \times 80.375 \times 0.284$$
$$= 694.7\#$$

WEIGHT OF Tubing + small plate

$W_u = 3.7\#$
$W_e = 9.7\#$ } See 241-AY-02B cals.

TOTAL WEIGHT

$$W_{Tot} = 121.6 + 34.8 + 694.7 + 3.7 + 9.7$$
$$= 865 \text{ lb.}$$

BOX SIZE (MINIMUM) FOR CAISSON ONLY

66" DIA. x 81"
(5'-6") DIA x 6'-9"

# DESIGN CALCULATION

(1) Drawing H-2-820736, Rev. 0 (2) Doc. No. _____ (3) Page 7 of 13
(4) Building _____ (5) Rev. _____ (6) Job No. _____
(7) Subject WEIGHT AND BOX SIZE OF SPOOL PIECE ASSEMBLY (CR-06A)
(8) Originator PH Huang Date 3-16-94
(9) Checker A.H. ZIAOA Date 3-22-94

(10)

SPRAY RING (241-CR-06A)

WEIGHT OF PIPE (16" High)

$W_p = \frac{\pi}{4}(39^2 - 38.5^2) \times 16 \times 0.284$

$= 138.3\#$

WEIGHT OF spraypipe

$W_s = \pi(42) \times 9/12 = 99\#$

WEIGHT OF Gusset

$W_g = 9\,5/8 \times 4 \times \frac{2}{3} \times 0.25 \times 0.284 \times 9 = 16.4$

WEIGHT of RISER

$W_R = 90 \times 9/12 = 67.5\#$

Add 20% for Discrepancies

$W_R = 67.5 \times 1.2 = 81\#$

TOTAL WEIGHT

$W_T = 138.3 + 99 + 16.4 + 81$

$= 335$ lb.

BOX SIZE WITH CAISSON (MINIMUM)

66" DIA × (90 + 8 + 12 + 12).

= (5'-6" DIA × (10'-2")

# DESIGN CALCULATION

(1) Drawing H-2-82072P Rev 0 (2) Doc. No. _____ (3) Page 8 of 13
(4) Building H-2-820736, Rev. 0 (5) Rev. _____ (6) Job No. _____
(7) Subject WEIGHT AND BOX SIZE of PLATFORM SPOOL PIECE ASSEMBLY (CR-06A)
(8) Originator Pit Huang Date 3-21-94
(9) Checker A.H. ZIADA Date 3-22-94

(10) SUMMARY

WEIGHT AND BOX SIZE FOR SHIPPING 241-CR-06A

THREE PIECES OF PLATFORMS

TELECON WITH Stan CROW ON 3/21/94:

REQUIRE TWO BOXES:

ONE for center platform + Caisson;

ONE for two side platforms.

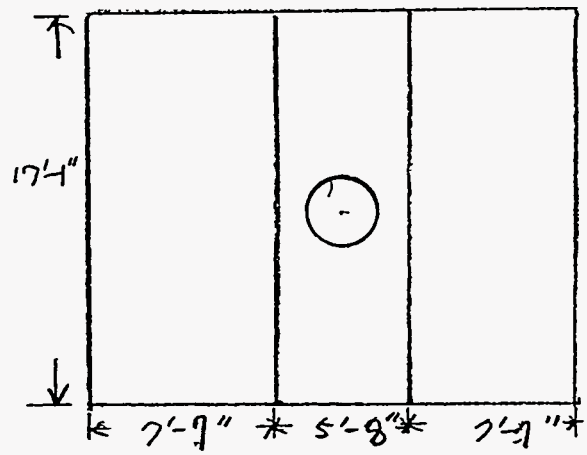


1. CENTER PLATFORM AND CAISSON

Total Weight

$W_T = 6290 + 865 + 335$

$= 7,490$ lb.

Box size:

(17'-2") x (5'-8") x (10'-2") high

2. TWO SIDE PLATFORMS

Total Weight

$W_T = 8982 \times 2$

$= 17,964$ lb

Box size:

(17'-2") x (7'-7") x (4'-6") high

# DESIGN CALCULATION

(1) Drawing H-2-820729, Rev. 0 (2) Doc. No. _____ (3) Page 9 of 13
(4) Building _____ (5) Rev. _____ (6) Job No. _____
(7) Subject WEIGHT and BOX SIZE of SHIELDED WORK PLATFORM (CR-06B)
(8) Originator F.H. Huang Date 3-14-94
(9) Checker A.H. ZIADA Date 3-22-94

(10)

SHIELDED WORK PLATFORM (241-CR-06B)

WEIGHT OF PLATE

$$W_P = [(60 \times 108 - \tfrac{\pi}{4}(4)^2] \times 1.5 \times 0.284$$

$$= 2755 \#$$

WEIGHT OF W12x35

$$W_W = [125 + 49 \times 2 + (49 + 13) \times 2 + 107 + (125 - 60)] \times 35/12$$

$$= 35 \times 43.25 = 1513.8 \#$$

WEIGT OF SIDE PLATE plus LIFTING HOOK

$$W_S = 6.5 \times 12.5 \times 0.5 \times 6 \times 0.284 + 5 \times 4$$

$$= 89.2 \#$$

WEIGHT OF RESTRAINT

$$W_R = (8.5 \times 6.5 \times 0.5 \times 0.284 + \frac{10.75}{12} \times 15) \times 6$$

$$= 127.5 \#$$

TOTAL WEIGHT

$$W_T = 2755 + 1513.8 + 89.2 + 127.5$$

$$= 4486 \text{ lb}$$

BOX SIZE (MINIMUM)

$$(125+2) \times (60 + 14 - 3.25 + 2)$$

$$= (10'-7'') \times (6'-1'')$$

$$(10'-7'') \times (6'-1'') \times (2'-3'') \text{ high}$$

# DESIGN CALCULATION

(1) Drawing H-2-820737, Rev. 0 (2) Doc. No. _____ (3) Page 10 of _____
(4) Building _____ (5) Rev. _____ (6) Job No. _____
(7) Subject WEIGHT AND BOX SIZE OF SPOOL PIECE ASSEMBLY (CR-06B)
(8) Originator FH Huang Date 3-14-94
(9) Checker A.H. ZIADA Date 3-22-94

(10)

SPOOL PIECE ASSEMBLY (241-CR-06B)

WEIGHT OF PLATFORM

WEIGHT OF TOP PLATE

$$W_p = [108 \times 84 - \frac{\pi}{4}(38.25)^2 - \frac{\pi}{4}(4)^2 \times 2] \times 1.5 \times 0.284$$

$$= 3370 \ \#$$

WEIGHT OF W12X35, 6.5" wide

$$W_W = [126 \times 2 + (108 - 6.5) + 84 \times 2 + (36 + 9) \times 2] \ 35/12$$

$$= 1783.5 \ \#$$

WEIGHT of SIDE PLATE plus HOOK

$$W_S = 6.5 \times 12.5 \times 0.5 \times 6 \times 0.284 + 5 \times 3$$

$$= 84 \ \#$$

WEIGHT OF RESTRAINT

$$W_R = (18.5 \times 6.5 \times 0.5 \times 0.284 + \frac{19.75}{12} \times 15) \ 6$$

$$= 127.5 \ \#$$

TOTAL WEIGHT

$$W_T = 3370 + 1783.5 + 84 + 127.5$$

$$= 5365 \ lb$$

BOX SIZE (MINIMUM)

$$(126 + 2) \times (60 + 6.5 + 30 + 2)$$

$$= (10'-8'') \times (8'-3'')$$

(10'-8") x (8'-3") x (2'-3") high

# DESIGN CALCULATION

(1) Drawing H-2-82037, Rev 0 (2) Doc. No. _____ (3) Page 11 of 13
(4) Building _____ (5) Rev. _____ (6) Job No. _____
(7) Subject WEIGHT AND BOX SIZE OF SPOOL PIECE ASSEMBLY (CR-06B)
(8) Originator FH Huang Date 3-14-94
(9) Checker A.H. ZIADA Date 3-22-94

(10)

CAISSON (241-CR-06B)

WEIGHT OF FLANGE

$W_{F1} = \frac{\pi}{4}(47^2 - 38.5^2) \times 0.75 \times 0.284$

$= 121.6\#$

$W_{F2} = \frac{\pi}{4}(43.5^2 - 38.5^2) \times 0.38 \times 0.284$

$= 34.8\#$

WEIGHT OF PIPE

$W_p = \frac{\pi}{4}(39^2 - 38.5^2) \times 37 \times 0.284$

$= 319.8\#$

WEIGHT OF TUBING + SMALL PLATE

$W_u = 3.7\#$
$W_e = 9.7\#$

TOTAL WEIGHT

$W_T = 121.6 + 34.8 + 319.8 + 3.7 + 9.7$

$= 490\ lb$

BOX SIZE (MINIMUM) FOR CAISSON ONLY

62" DIA. X 37"

= (5'-2" DIA X 3'-1")

# DESIGN CALCULATION

(1) Drawing H-2-820737 (2) Doc. No. _____ (3) Page 12 of 13
(4) Building _____ (5) Rev. _____ (6) Job No. _____
(7) Subject WEIGHT AND BOX SIZE OF SPOOL PIECE ASSEMBLY (CR-06B)
(8) Originator PH HUANG Date 3-16-94
(9) Checker A.H. ZIAVA Date 3-22-94

(10)

SPRAYRING (241-CR-06B)

WEIGHT OF PIPE (16" high)

$W_p = \frac{\pi}{4}(39^2 - 38.5^2) \times 16 \times 0.284$

$= 138.3$ #

WEIGHT OF Spray PIPE

$W_s = \pi(42) \times 9/12 = 99$ #

WEIGHT OF GUSSET

$W_g = 9\,5/8 \times 3\frac{3}{4} \times \frac{2}{3} \times 0.25 \times 0.284 \times 9$

$= 15.4$ #

WEIGHT OF RISER

$W_R = 48 \times 9/12 = 36$ #

add 20%

$W_R = 36 \times 1.2$

$= 43.2$ #

Total Weight

$W_T = 138.3 + 99 + 15.4 + 43.2$

$= 296$ lb.

BOX SIZE WITH CAISSON (MINIMUM)

67" DIA. X (48 + 8 + 12 + 12 = 80")

= (5'-7") DIA. X (6'-8")

# DESIGN CALCULATION

(1) Drawing H-2-82072, Rev. 0 (2) Doc. No. _____ (3) Page 13 of 13
(4) Building _____ (5) Rev. _____ (6) Job No. _____
(7) Subject WEIGHT and Box SIZE OF PLATFORM + Spool PIECE ASS. (CR-06B)
(8) Originator P.H. Huang Date 3-22-94
(9) Checker A.H. ZIAYA Date 3-22-94

(10)

SUMMARY

WEIGHT AND BOX SIZE FOR SHIPPING 241-CR-06B

TWO PIECES OF PLATFORMS

Telecon with STAN CROW on 3/21/94:
REQUIRES TWO BOXES:
ONE for Center PLATFORM + CAISSON;
ONE for one SIDE PLATFORM.

1. CENTER PLATFORM AND CAISSON:

Total weight

$W_T = 5365 + 490 + 296$

$= 6151$ lb.

Box SIZE

(10'-8") x (8'-3") x (6'-8") high

2. SIDE PLATFORM

WEIGHT

$W_T = 4486$ lb.

Box SIZE

(10'-7") x (6'-1") x (2'-3") high

# ATTACHMENT

## DSI FROM F. H. HUANG TO T. C. MACKEY

WHC-SD-W320-DA-004
Rev 0



DON'T SAY IT --- *Write It!*

DATE: March 24, 1994

TO: Tomas C. Mackey S2-03

CHECKER: Ahmad H. Ziada H5-53

FROM: Frank H. Huang S2-03

Frank H Huang

Telephone: 373-5755

SUBJECT: Weights and Container Sizes for Pit Platforms, Spool Piece Assembly, and Pit Cover Plate

The estimates of weight and box size of platform, platform with spool piece assembly, and pit cover plate to be packed in each individual container are given as follows.

PIT 241-AY-02B

Box #1 contains one platform, caisson, and sprayring
Weight of assembly: 10,815 lbs
Height of container: 136 in (11 ft- 4 in)
Width 1 of container: 146 in (12 ft- 2 in)
Width 2 of container: 140 in (11 ft- 8 in)

PIT 241-CR-06A

Box #2 contains central platform, caisson, and sprayring
Weight of assembly: 9,690 lbs
Height of container: 122 in (10 ft- 2 in)
Width 1 of container: 206 in (17 ft- 2 in)
Width 2 of container: 68 in ( 5 ft- 8 in)

Box #3 contains two side platforms
Weight of assembly: 17,964 lbs
Height of container: 54 in ( 4 ft- 6 in)
Width 1 of container: 206 in (17 ft- 2 in)
Width 2 of container: 91 in ( 7 ft- 7 in)

POOR COPY RECEIVED
DOCUMENT PROCESSING

A1-1

WHC-SD-W320-DA-004
Rev Ø



PIT 241-CR-06B

Box #4 contains central platform, caisson, and spraying
Weight of assembly*: 8,351 lbs
Height of container: 80 in ( 6 ft- 8 in)
Width 1 of container: 128 in (10 ft- 8 in)
Width 2 of container: 99 in ( 8 ft- 3 in)

Box #5 contains one side platform
Weight of assembly: 4,486 lbs
Height of container: 27 in ( 2 ft- 3 in)
Width 1 of container: 127 in (10 ft- 7 in)
Width 2 of container: 73 in ( 6 ft- 1 in)

PIT (06C)-COVER PLATE

Box #6 contains cover plate
Weight of cover: 3,035 lbs
Height of container: 10 in
Width 1 of container: 151 in (12 ft- 7 in)
Width 2 of container: 145 in (12 ft- 1 in)

---

* weight of platform support (2200 lbs) is included.

It is suggested to use a safety factor of 1.2.

POOR COPY RECEIVED
DOCUMENT PROCESSING