Three confinement systems - Spherical Tokamak, Standard Tokamak and Stellarator: A comparison of key component cost elements

T. G. Brown

***Abstract*— Since the 1950's "Next Step" fusion devices and power plant studies have been developed for a number of magnetic confinement systems but an open question remains…can a magnetic fusion device be simplified to the point where it will be cost competitive and operate with high availability? Concept designs based on the ARIES advanced tokamak (AT), spherical tokamak (ST) and the quasi-axisymmetric stellarator (QAS) option have progressed in recent years through a series of PPPL studies with an underlying intent to improve the engineering feasibility of each, giving special attention to concepts that simplify the device configuration and improve maintenance features. For the spherical tokamak option, design details centered on a 3m Fusion Nuclear Science Facility that evolved to incorporate vertical maintenance, HTS magnets, a small inboard DCLL blanket and a liquid metal divertor. In collaboration with the K-DEMO and CFETR concept study teams the tokamak design has evolved to increase plasma component access within a vertical maintenance approach using enlarged TF coils incorporating a low and high-field Nb_3Sn winding pack that provide a peak field of 16T. A recent PPPL stellarator study focused on simplifying the stellarator winding topology to improve access to in-vessel components; combining coil optimization with winding surfaces that incorporated geometry constraints specified by engineering. This study centered on a 1000 MW power plant design with a tokamak like vertical maintenance scheme that allows access to remove large internal blanket sectors.**

Results of three confinement studies (PPPL developed ST, K-DEMO and the PPPL developed QAS stellarator) will be presented to highlight concepts that simplify each device configuration and improved their maintenance features. Scaling each option to a common 1000 MW net electric power plant mission allows comparisons to be made of key cost elements such as the size of major core components, sizing of the reactor hall or external facilities needed to handle and store activated in-vessel components.

***Index Terms*— in-vessel arrangement, maintenance approach, reduced part count, simplifying feature**

"*Research supported by the U.S. Department of Energy under Contract No. DE-AC02-09CH11466 with Princeton University*."

Thomas G. Brown, Princeton Plasma Physics Laboratory, Princeton, NJ 08543 USA (email: tbrown@pppl.gov)

I. Introduction

Fusion experimental devices have evolved in efforts to understand plasma operating conditions and now through the ITER project will make the long-awaited transition from experimental studies to burning plasma physics conditions, a critical step in the path to a full-scale electricity-producing fusion power plant. The ITER tokamak design is an outgrowth of the EU JET physics device and is not a machine designed to promote a viable maintenance strategy but rather a physics device to demonstrate conditions of a burning plasma.

Concept designs for a planned DEMO project will need to couple physics operations with design strategies that emphasize effective maintenance schemes and component details with attention given to reliability practices that foster high availability operations. Configuration influences need to extend beyond the device core itself and include interaction of auxiliary equipment and services as well as addressing strategies to reduce the size of any external maintenance and storage facility. Fusion is years away from the construction of a DEMO plant and although physics feasibility is needed to underpin its viability, engineering and economics will play a major role in deciding the success or failure of DEMO and fusion itself.

It's often thought that at this stage of development one cannot define the cost of a fusion power plant. But maybe you can and maybe defining a target cost can help move the design process toward a credible economical outcome. A fusion power plant will be capital intensive and in all likelihood follow a path similar to the design and construction of a nuclear fission plant. The construction cost estimates for new nuclear power plants are very uncertain and have increased significantly in the past decade. Global nuclear power has stagnated and is in total decline in the U.S., especially since the Fukushima disaster. Early 2008 data show new nuclear units are planned were in the total cost range (including escalation and financing costs) between $6 billion and $9 billion for each 1,100 MW [1]. The U.S. Southern company, Georgia Power was building two AP1000 1,100 MW reactors at the Vogtle nuclear power station at a cost of $7.4 billion each; unfortunately, the project is now on hold pending outcome from Toshiba's Westinghouse unit who filed for bankruptcy in wake of billions of dollars in cost overruns at two U.S. nuclear power plants it is building in the U.S. Southeast [Reuters].

The fusion process is more complex than fission implying that a fusion power plant will expected to see higher capital

and operating costs. Fusion does offers safe operation without the possibility of a meltdown and although it produces radioactive waste the waste generated last a much shorter time period – all of which can be considered a value-added enhancement over the cost of a fission power plant. This value-added enhancement of fusion can be used to increase the capital cost of a fusion plant relative to fission…to some limit. If one were to assume the intrinsic value of fusions enhancement was a 25% premium over the capital cost of a fission plant, it would imply a fusion plant could be economically viable if its capital cost did not exceed $7.5 - $11.25 billion. Is the intrinsic value of fusions enhancements worth more than 25%? Is the intrinsic value of fusions safety enhancements worth less than 25%? If improved safety and waste conditions of fusion offers little intrinsic value then the economics for fusions looks to be dire. If the safety and waste conditions are noteworthy but the fusion plant electricity production per year is significantly less than a fission plant due to low availability then any intrinsic value that might exist will be marginalized. There is an upper cost limit above which makes any power plant economically impractical. Nuclear plants get built by large companies with huge assistance from governments in the form of loan guarantees. It's difficult to obtain funding for very high fixed cost projects that have a history of cost risk and long horizons for repayment. If something goes wrong with the project, all up-front money is lost. Rapid advancement in competing technologies is also a risk for nuclear power. Solar power is becoming cheaper and energy storage research is advancing which places pressure on the economics of nuclear power. Given the finance history in raising large upfront finance capital for nuclear fission power plants and advances in competing technologies, it seems unreasonable to assume fusions operation enhancements will offer high intrinsic value; therefore a 25% markup appears to be a generous upper bound for this estimate. Given this assessment a fusion power plant constructed in the U.S. might be valued between $7.5B and $11.25B; lower values are possible in countries where lower construction costs are prevalent. Another question to asked – can a fusion power plant based on any confinement option being considered be constructed within this price range and eventually operate at a high availability as an operational fission power plant?

Knowing design and construction conditions that can cause cost overruns in fission power plants can be useful in defining design conditions or economic factors that can also impact the success of fusion. Looking within the literature reveals some of the challenges in developing a successful fission power plant; identifying leading issues that contribute to project cost overruns and cancelations as well as defining new cost saving techniques being implemented in their construction. Section 2 of this report will summarize lessons learned from the construction of nuclear fission plants that may be applicable to the development of a fusion power plant. Each of the three confinement options will be defined in Section 3. Section 4 will highlight specific design features for each confinement option and scaled designs to a comparative 1000 MW power plant. At this common operating point some prominent configuration components will be listed and compared in Section 5, attempting to define features or conditions which offer design or cost advantages. Section 6 will summarize what was found and provide sizing comparisons between options and with respect to a fission plant containment building and finally Section 7 will provide a summary with concluding remarks and try to answer the initial question proposed – is there a chance that a fusion power plant will be economically viable?

II. Lessons Learned from the Construction of Nuclear Fission Power Plants

Building a nuclear power plant has had its challenges in recent years with large companies experiencing financial losses, plants under construction behind schedule where the high cost of delays make the nuclear plant less competitive with respect to alternate energy sources [2]. Not all organizations or countries have undergone the same set of construction difficulties. South Korea and China both keep nuclear building costs low through repetition and standardization. Korean power plant capital costs have remained fairly stable the past 20 years, while they have tripled in France and America [3]. Because of frequent cost overruns in large power plants there is an interest in developing small modular reactors (SMR). NuScale Power has developed an SMR design that has been submitted to the U.S. Nuclear Regulatory Commission for a planned construction on the site of Idaho National Laboratory in the U.S. [4]. A NuScale SMR unit is designed to delivers about 50 MW with twelve operating together to create a 600 MW power plant. A key safety feature of NuScale's SMR design is that the small size, with large surface-area-to-volume ratio, prevents any kind of meltdown. Westinghouse has a SMR design incorporating passive shut-down safety features that provide 225 MW [5][6].

Some of the leading conditions contributing to rising fission power plant costs has been contributed to lack of standardization, increase in the complexity of power plants, safety related regulatory interventions and construction delays [1][7][8][9]. Advanced construction methods have been used to reduce nuclear power construction costs by shortening the time needed to build a plant. One major take-away involving construction improvements is that improved construction methods must be made in the conceptual design stage and then followed through consistently throughout the project design phase; a statement that needs to be taken seriously and imbedded early in the fusion DEMO design process. Although not a requirement for a DEMO mission, to better prepare for the power plant construction phase it would be prudent to include all improved construction methods within the definition of a DEMO facility. The environment that fission power plants compete and the economic conditions which enhance their success needs to be understood as any potential fusion option will operate under similar conditions in a similar economic environment.

III. Design background

A wide range of designs promoting the direction fusion might take has been described within international DEMO design studies and within the smaller U.S. efforts involving a Fusion Nuclear Science design, spherical tokamak, and stellarator studies. Exact comparisons of these confinement systems (conventional tokamak, spherical tokamak, and quasi-axisymmetric stellarator) cannot be made because of dissimilar missions, operating parameters and engineering requirements but some differentiating engineering features can be identified along with design conditions which impact cost and concept viability. One parameter that invokes discussion is device size… or major radius… and its value as a defining factor underlining the cost of the device. Is size alone important; based on fission results device complexity is a cost driver; does ease of maintenance offset size considerations; are there particular design features that improve cost conditions?

IV. General design features

ITER has made a major contribution to the advancement of magnetic fusion even before the start of first plasma operation. Through engineering development and technology advancement the ITER project has set a foundation from which to build a next step DEMO device.

Figure IV-1 highlights the general arrangement of ITER showing a cut-away of the device core and some of the many auxiliary systems that surround it. The extent of these auxiliary systems brings into question the feasibility of extracting a full in-vessel blanket sector in an outward radial direction. There may be less diagnostics systems called for in the DEMO DT phase [10] than scheduled for ITER but there will be diagnostics along with heating systems, auxiliary services, local shielding and shield walls dispersed around the

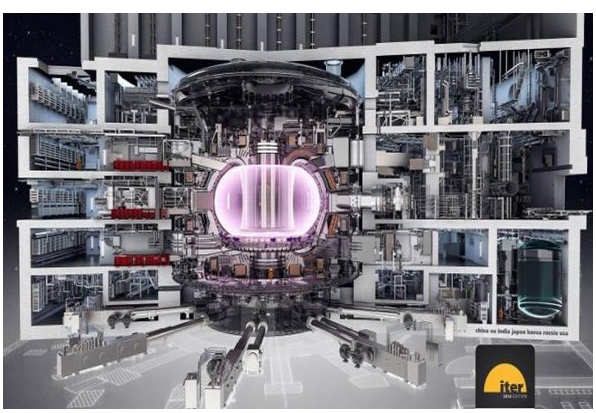

Fig. IV-1 ITER Reactor Hall

fusion device midsection. As part of a PPPL Pilot Plant study diagnostic requirements for each of three conferment options were evaluated by Alan Costley, a PPPL consultant and former Head of Diagnostics on ITER [10]. Costley concluded that for DT operation an ST and conventional tokamak pilot plant device would require five upper and lower ITER style ports and two mid-plane diagnostic ports; less diagnostics would be required for a stellarator; additional neutron DT qualifying diagnostics would be needed during a hydrogen phase for all options. Heating studies done for K-DEMO has shown the preferred location of all heating and current drive systems are at or near the horizontal mid-plane. For bulk plasma current drive efficiency it's hard to escape the inclusion of neutral beam systems, at least for operation during the early DEMO phase. All systems and services that interface with the device core that are within the path of the large retracted in-vessel sector must be moved when a sector is retracted. If retracted sectors are moved in a toroidal direction to a central maintenance access-way then all auxiliary equipment and services in that path must also be removed. Auxiliary systems and services that surround a fusion device will challenge the ability to develop any effective horizontal maintenance design.

As with the construction of a fission power plant and with ITER, vertical installation will be used to assemble all fusion confinement options (ST, conventional tokamak or stellarator) – setting the stage for vertical maintenance concepts. The building space above the machine core is set by assembly requirements. As shown for the ITER tokamak of Figure IV-1, the greatest clear space for maintenance activities in the area surrounding the machine is above the device core. Cost advantages can be gained by using this space along with some of the installation tooling used to assemble the device. It should be remembered that the space above the device may again be used to replace any un-planned failed non-vacuum vessel components that does not pass through a vertical port.

There are a number of critical design issues that play a role in setting the machine configuration arrangement and the cost of the project. One contributing item that needs further attention is the storage and maintenance considerations involved with the storage and handling of plasma components needing extended cool down time. EU papers have been written dealing with the storage, handling and processing of all in-vessel components for planned activities carried out in an Active Maintenance Facility (AMF) of a DEMO device [11][12][13]. This facility would play a more expanded role than currently defined for the ITER Hot Cell. The AMF complex defined has a storage area sized to handle a full set of in-vessel components consisting of 80 blanket sectors and 48 divertor cassettes of a 16 TF coil EU DEMO device, located behind the device torus hall shown in Figure IV-2. In terms of volume the EU defined AMF would be six times larger than the ITER hot cell; a volume of 737,000m^3. First wall

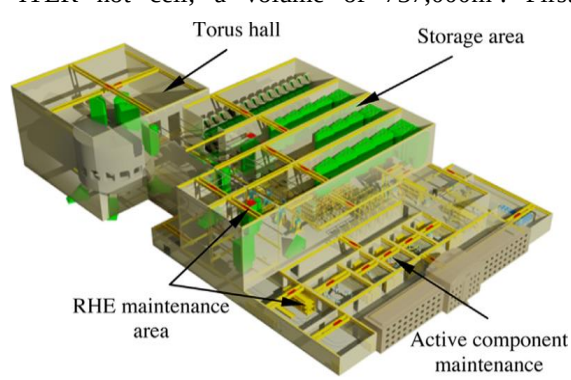

Fig. IV-2 EU DEMO defined Active Maintenance Facility (AMF)

components were estimated to require active cooling for up to 18 months to allow dexterous remote handling to operate at a stable temperature (~50° C) without cooling and it would take between 6 and 12 years to complete all of the work within the AMF [13]. The implication of these results is that the maintenance and storage requirements for DEMO and the eventual fusion power plant itself will be a major factor in defining the project capital and operating cost. Exploring design options that minimize the size on an AMF facility is warranted. An interesting thought worth perusing is to develop the space above the device core as an intermediate remote maintenance (RM) staging area that operates without a cask interface and perform simple non-dexterous RM tasks that separate components into activation groups to reduce the long term storage volume. The direct interface to a RM staging area from the device below also will reduce the risk of failure involving the removal of blanket sector modules using a cask extraction system.

V. Device Designs and Simplification Strategies

There is variation in concept designs between confinement options and within designs of a given confinement area. The tokamak option for the most part includes designs based on vertical maintenance although the U.S. ARIES tokamak designs endorses a horizontal maintenance scheme and a proposed MIT high field ARC design [14] uses joined TF coils in an arrangement that promotes the vertical removal of the entire vacuum vessel/blanket system. Stellarator power plant designs tend to follow a physics path with machine configurations based on magnet topology represented by either continuous-coils or designs incorporating modular-coils. Since the economic viability of a stellarator power plant is mainly determined by the magnet system and the winding topology to provide sufficient space for blanket maintenance, the stellarator size traditionally has been very large – with device major radius on the order of 18m to 22m [15]. Remarkable improvements with regard to design simplicity and maintenance enhancement have been accomplished within a PPPL quasi-axisymmetric stellarator design study; detailed in past studies [16][17] are summarized in this report

A. Standard Tokamak design features

EU DEMO Design:

The EU DEMO design incorporates a vertical maintenance scheme depicted in Figure V-1. The design base is an enlarged ITER device with a single-null plasma chamber surrounded by close fitting TF coils sized to meet plasma ripple requirements; recently the number of TF coils increased from 16 to 18 coils to further reduce the ripple value - a coil number that now matches the number of coils in ITER. As shown in Figure V-2 the increase in the number of coils reduces the vertical port size that translates into an increased number of blanket sectors, two inboard and three outboard, along with the addition of interfacing blanket pipes.

K-DEMO design:

The Korean K-DEMO device [18][19][20] incorporates a double-null (DN) divertor that promotes strong plasma shaping (elongation and triangularity) and a two-winding

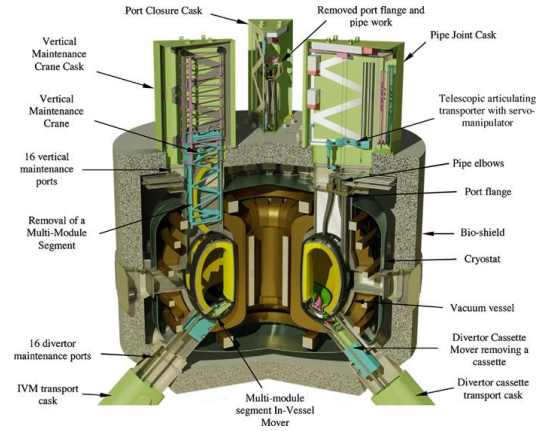

Fig. V-1 EU DEMO Design

pack, Nb_3Sn 16 superconducting TF coil system that operates with a peak field of 16T [19]. One disadvantage of a DN design is the reduction of blanket area because of space required for a second divertor system. This can lower the

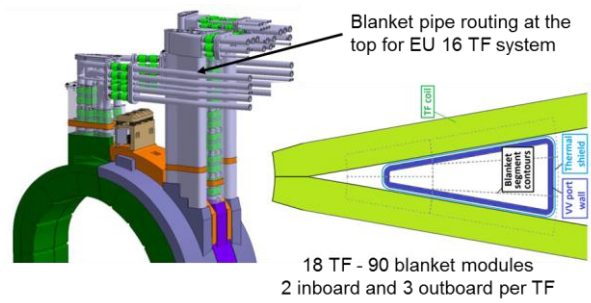

Fig. V-2 Blanket segmentation and piping for 16 TF arrangement only get further complicated with an 18, close fitting TF coils system

tritium breeding ratio. To overcome the reduction of blanket area the outboard blanket sectors are extended and the inboard divertor is reduced in size to match its lower heat flux. One option under consideration is to split the divertor (inboard and outboard) in two and integrate the components with the inboard or outboard blanket sectors. Figure V-3 illustrates the K-DEMO device general arrangement.

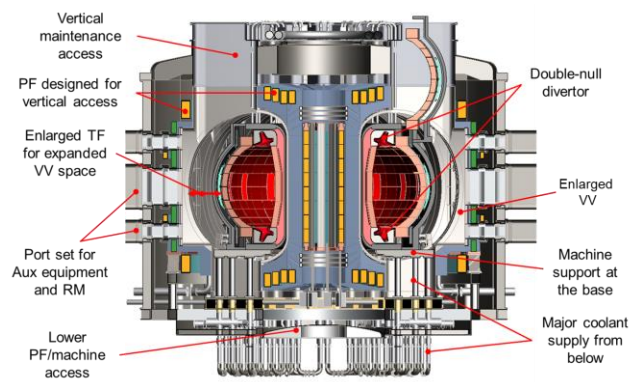

Fig. V-3 K-DEMO device general arrangement

The TF coil geometry is expanded in size to allow a reduced number of larger blanket sectors to be maintained

with blanket piping services primarily interfacing from below; a design feature brought about by using the symmetrical PF arrangement of a DN divertor system. Lower triangularity, single-null designs have additional PF coils at the bottom which reduces the size of any lower port opening as shown in the EU and CFETR DEMO designs.

Figure V-4 illustrates the design concept under development for the K-DEMO in-vessel system. A semi-permanent inner shell shield structure provides alignment for blanket installation and labyrinth interfaces between sectors; when connected to the shell of the outboard blankets the joined structure is used to provide support against disruption loads. The toroidal extent of the outboard blanket modules is sufficient to allow heating, diagnostics or test modules to be installed without completely splitting a module in the vertical direction and uninterrupted blanket connections and services.

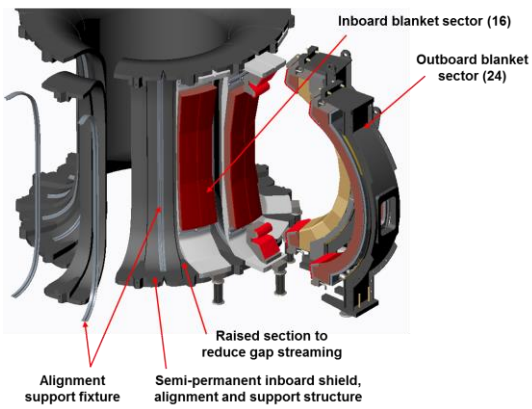

Fig. V-4 In-vessel concept details

The stress allowable for the 316 stainless steel used for the TF coil case at the 4K operating temperature is 666 MPa, following the ITER magnet structural design criteria. The Tresca stress (the absolute sum of the wedging and the vertical tension) at the TF inboard midsection is approximately 860 MPa. This exceeds the 666 MPa allowable by about 30%.

A number of analytical and design options were investigated to resolve the static overstress condition. Adding structural reinforcements to the outer leg and horizontal legs of the TF case did not sufficiently reduce the inner leg stress; increasing the wall thickness in the wedged 'nose' of the case by 10cm (25%) was insufficient although optimizing the design space between the TF an OH could add additional case thickness; re-optimizing the TF winding with a third winding pack or developing a graded layer winding scheme, both could be used to increase the winding current density and allow more space for structure. Reducing the peak field by 10% itself would bring the stress value within the structural allowable but this would require an increase in the device size. Specific heats of 316 SS can have higher yields, and with some R&D it is expected that this will be improved given the time period of K-DEMO. It is expected that with the combination of the options considered that K-DEMO will be able to operate at a peak field of 16T – appearing to be a limit using Nb_3Sn and the design techniques employed. TF windings incorporating high current density HTS will allow more space for steel structure needed for 16T operation. Operating above 16T will depend on tradeoffs between the cost of HTS, grading of the HTS TF winding, TF stress limits and a lower field operation at a larger machine size.

CFETR design:

The baseline Chinese CFETR DEMO design is a 6.7m device with 16 enlarged TF coils surrounding a single-null plasma that follows a similar divertor design as ITER. An alternate design is being developed that incorporates 12 enlarged TF coils that results in fewer number of blanket segments offering greater space for maintenance and blanket services. The CFETR general arrangement is show in Figure V-5**.** The Korean and Chinese DEMO devices use similar TF designs that incorporate low and high field windings which increases the winding current density providing more space for structure. The net benefit of a two winding pack design (or graded windings) is higher TF field (16T), reduction in the coolant flow length, pumping power and a significant cost reduction brought on by reducing in the volume of SC wire.

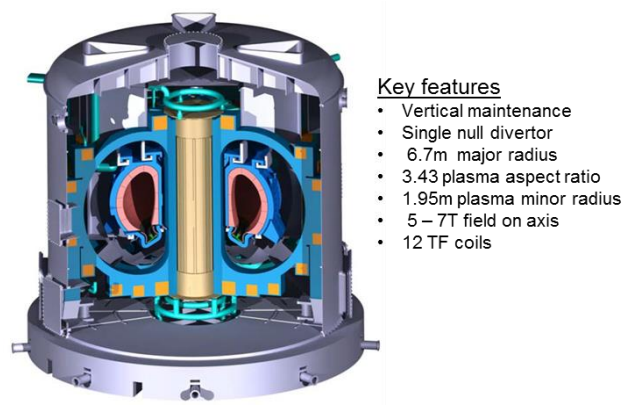

Fig. V-5 Chinese CFETR DEMO device

U.S. ARIES-ACT1 design:

The ARIES-ACT1 design is a 6.2m major radius, 16 TF coil device operating with a double-null plasma and designed for horizontal maintenance. The TF field on axis is 6T and the coil is sufficiently sized to allow each of 16 full blanket sectors to be retracted between coils into an interfacing cask containment system. A cut-away view of an ARIES-ACT1 fusion power core is shown in Figure V-6.

A maintenance corridor surrounds the entire tokamak core to allow full blanket sector modules to be moved with a floor based transport system to a central, large maintenance area located adjacent to the device core. The main motivation for perusing horizontal maintenance has been the perceived notion that it is easier to perform than vertical maintenance and would result in a higher availability value. However, similar availability results were found within an EU availability study performed on their vertical maintenance design [12]. Open issues remain to be addressed before the horizontal maintenance concept can be considered as a viable design approach. Greater representation of the component and service details that surround the device, as depicted in the ITER design of Figure IV-1 is required to define their interaction with respect to movement of large blanket sectors within the

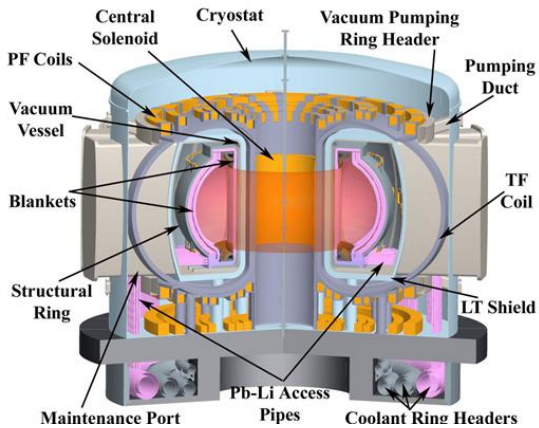

Fig.V-6 ARIES-ACT1 general arrangement

prescribed surrounding maintenance area. Offsite fabrication reduces the power plant cost; extending the magnet structure to support a large open area needed for horizontal maintenance may render a TF coil too large to be shipped to the power plant site.

B. Spherical Tokamak (ST) design

PPPL's 3m HTS ST-FNSF design [21][22] was configured to follow the vertical maintenance scheme of K-DEMO. Space conditions improve as an ST is sized for a larger DEMO or power plant design; however the 3m design study concluded that a thin inboard breeding blanket is required to meet tritium breeding goals prompting the need for high current density HTS windings in the TF coils. The current density of low temperature superconductors (LTS) is too low and leaves insufficient space for a thin inboard blanket. HTS windings are also needed for some of the interior PF coils. The TF coil was sized to operate at 16T peak field with an overall inboard leg current density of 36 MA/m^2 using an MIT 12 sub-cable YBCO twisted stacked tape. A 70 MA/m^2 current density HTS solenoid was defined to provide a small OH flux.

To keep the heat load on a tungsten divertor within a 10 MW/m^2 allowable a Super-X divertor configuration was defined that moved the divertor strike point to a larger radius. To accomplish this, a more extensive PF coil set was needed to shape the plasma requiring a larger number of higher current PF coils than compared to a standard DN PF configuration. A large effort within the fusion community has been involved in investigating the more expansive Super-X and flake divertor/PF arrangements to reduce the divertor heat load. There have been some positive results shown within the NSTX experimental device using a snowflake divertor where significant reduction of the interaction between hot plasma and the cold walls surrounding it has been found [23]. The results of 1D and 2D simulations also have shown that the peak divertor heat flux from an ELM can be substantially smaller for the snowflake divertor compared to the standard divertor [24]. Unfortunately the negative engineering impact of incorporating close proximity coils near the plasma has not been addressed. All defined snowflake and super-X PF geometries degrade in-vessel machine access, add magnetic structural requirements and diminish maintenance characteristics. High heat load liquid metal divertors' provide benefits through reduced machine size and simplified PF coil systems which results in improved maintenance conditions. A LM divertor system brings into play its own issues which need to be researched and qualified; however if the technology proves viable and the physics and plasma material interaction proves feasible it can be shown that LM allows simplification of the PF system and higher operating divertor heat loads which leads to a smaller device size; not included in this list is the potential for improvement in the plasma confinement time.

Figure V-7a is a side-by-side comparison between 3m developed ST designs comparing the difference between a Super-X divertor defined ST machine (on the right) and the LM device (shown on the left) that includes a more conventional, simpler PF coil arrangement. The Super-X design requires an intermediate vacuum vessel to contain superconducting shaping coils that need to be located in the area of the vertical ports in order to shape the longer leg Super-X divertor shape. Local details of the intermediate cryostat designed to house the upper Super-X shaping PF coils is shown in Figure V-7b.

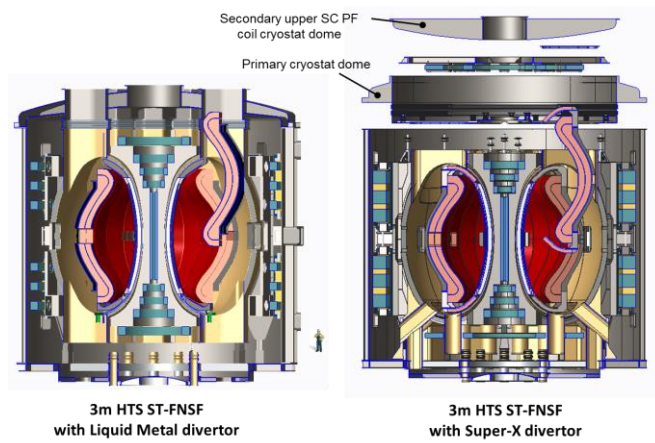

Figure V-7a Side-by-side comparison of the 3m ST designs with Super-X

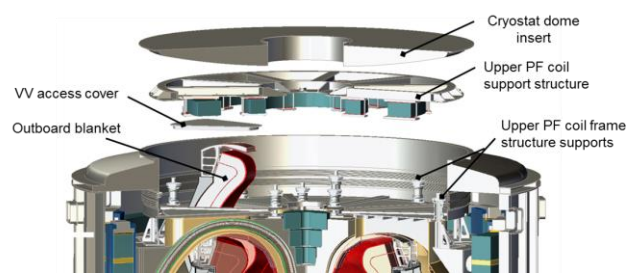

Figure V-7b Local details highlighting a separated cryostat for upper PF coils for the 3m HTS ST_FNSF Super-X divertor

In order to make a closer comparison between the ST and the conventional tokamak confinement option the 3m HTS ST-FNSF design with a LM divertor was enlarged in size to operate at a net power of 1000 MW. Based on an early physics assessment an ST device would need a major radius of approximately 5m to operate at this power level [25].

C. Quasi-axisymmetric stellarator (QAS) design

Probably the most remarkable improvement with regard to design simplification and maintenance enhancement has

been accomplished within a new quasi-axisymmetric stellarator design. As part of an early PPPL pilot plant study an engineering exercise was undertaken to enhance the maintenance characteristics of the stellarator by straightening some of the stellarator modular coil (MC) outboard legs to provide greater access to plasma components. MC's within a stellarator design are discrete non-planar windings used in forming the plasma shape. Investigation of higher aspect ratio plasmas with less complicated MC shapes were studied and engineering metrics that promote maintenance improvements were added to the physics code used in defining the modular coil winding configuration [16][17]. The physics design code (COILOPT) was upgraded to receive inputs of engineering constraints on the MC surface geometry and winding centers to provide coil solutions with straightened MC outboard legs; the Type-C winding was left unrestrained in a number of iterations. Other improvements and extensions of the code (now COILOPT++) are still being developed.

The upper portion of Figure V-8 shows the original 7.75m, aspect ratio 4.6 ARIES-CS device with minimum access through complex MC windings that only allow small port access, resulting in maintenance of a large number of small blanket segments. The lower region of Figure V-8 shows the general arrangement of the reconfigured, aspect ratio 6 device, highlighting the straightened (planar) outer leg stellarator design developed using the updated physics design code (COILOPT++). The 1000 MW, 9.4-m major radius design has all modular coil outboard legs located in a near vertical plane allowing a tokamak style, vertical maintenance approach to maintain the few number of large blanket sectors. Vertical removal occurs once the blanket sector is first moved

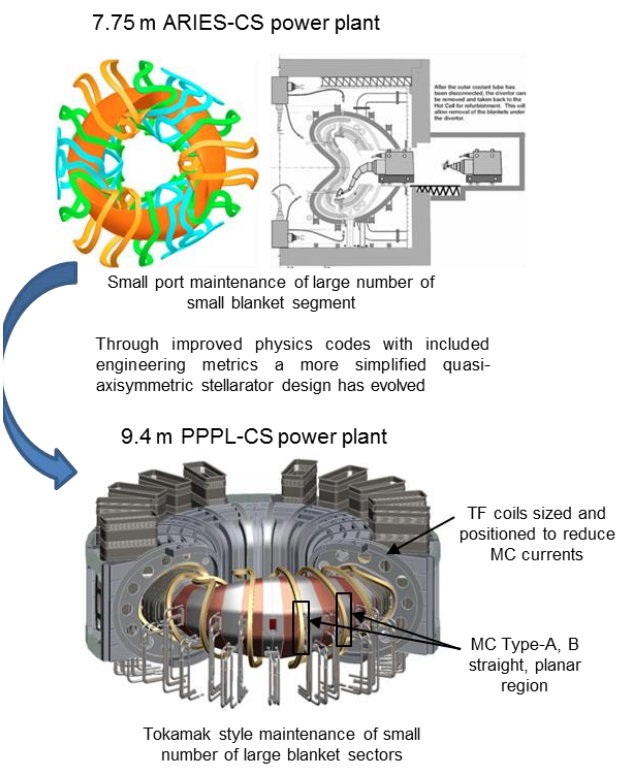

Fig. V-8 MC Shape changed from unconstrained windings to straightened outer legs

in a radial direction. Although initial COILOPT++ runs included saddle coils in expectation of being needed to compensate the straightening of MC outboard legs, improvements in the code found MC solutions without the need to add saddle coils.

One feasibility issue in developing the new stellarator design centered on establishing MC peak currents and winding current densities that allowed the winding geometry to be formed to meet bend radius requirements in the complex inboard regions of the MC. High current density, HTS windings have small cross-sections making it easier to form acceptable bend radii. Given the longer time period to develop HTS conductors with reliable properties of required length at reasonable costs, an effort was made to investigate design options that incorporated existing SC materials. One solution found to reduce the MC current and winding cross-section was to include TF coils in the MC optimization process rather than running the code with MC's exclusively, which does carry a toroidal current component. The results found that the MC winding currents could be cut in half when TF coils were included and there centers located a sufficient distance from the MC's. Figure V-9 shows a section view at the Type-B

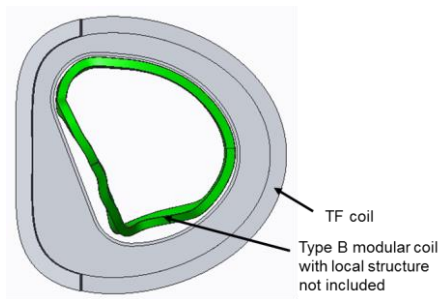

Fig. V-9 Section view showing TF coil surrounding the Type-B modular coil

MC/TF pair that typifies the required spacing between the MC's and TF coil. Represented in this figure is a cased TF coil that surrounds the modular coil with an internal structure that is part of a TF/MC support system not fully developed at this time. Another motivation for reducing the current in the MC's was to transfer current to the simpler geometry of expected lower cost TF coils. Further design studies are needed to investigate the K-DEMO style graded winding, full graded layer winding designs along with evaluating increases in machine size to reduce the MC current and subsequent winding cross-section.

The QAS blanket system is subdivided into 36 blanket sectors, twelve per field period. Figure V-8 highlights all blanket sectors uncovered within a period in striped colors and the gray shaded blanket shown in Figure V-10 removed in a radial direction between TF coils. The copper colored segments of Figures V-8 require movement in a toroidal direction (with possible small rotations) prior to a radial extraction through the nearest vertical port. With adjacent space still available, an updated design would expand the overall width of the vertical ports to provide additional space for support equipment to aid blanket extraction.

The blanket maintenance process requires a sequence of motions. The removal of all sectors initially involves a slight

vertical lift to unload the sector weight. All sectors located in-line with a vertical port will have a small movement in the radial direction (using external RM power systems) before

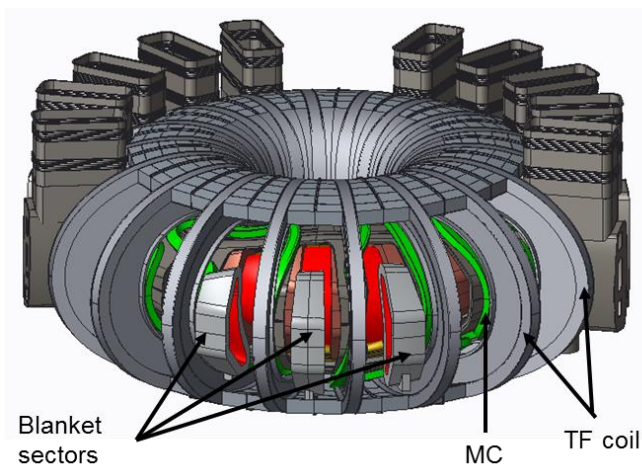

Fig. V-10 Device core showing blanket sectors extracted with local vacuum vessel ports removed.

being lifted out of the vertical port. Sectors located beneath a MC outer leg will require toroidal translation to line it up with a vertical port, from which again a radial motion will occur followed by a vertical lift. This process is identical with the planned maintenance scheme developed for the K-DEMO design. As with the K-DEMO design a local external rail will is included to help guide the motion. The only additional motion may be required for blanket sectors located under the Type-C modular coils which may have more complex shapes, such that blanket sectors located beneath them may require some rotation. It needs to be remembered that this QAS stellarator design allows the removal of full blanket sectors (joined inboard and outboard segments) unlike the segmented inboard/outboard sectors of the tokamak options. This is expected to result in lower maintenance times.

VI. COMPARISON OF LEADING COST COMPONETS OF DIFFERENT CONFINEMENT OPTIONS

Advancements have been made in the design of all confinement options to the point where comparisons can be made between the major cost items and where design directions can be identified that helps reduce capital costs.

The results of the PPPL ST-FNSF study show that the compact nature of the ST device requires high current density to reduce the size of the TF coil inboard leg to allow space for a thin inboard blanket to meet tritium breeding requirements. The high current density values required are only offered by HTS conductors. The conventional tokamak has less need for HTS if the device is large enough to keep the divertor heat load at manageable levels when using tungsten divertors, one design condition that prompted the size of the EU DEMO design. Unfortunately larger major radius generally come with higher capital costs – unless lower wall loading can be used to expand the blanket recycle time sufficiently to lower cost. HTS windings also would be beneficial for the stellarator, to allow the MC to be sized without a TF coil along with the ability to operate at higher temperatures, reducing the thickness of the magnet thermal shield and lowing refrigeration costs. The K-DEMO design has a 500 MW maximum power level with double-null tungsten divertors operating at a peak heat load ~ 12 MW/m^2, exceeding the nominal 10 MW/m^2 operating point. A condition may exist that allows the same size device to operate at 1000 MW if the device were designed with higher performance LM divertors. For a power plant comparison of this study, the K-DEMO device will be used assuming operation with a LM divertor system similar to the design of the ST PP and QAS stellarator device.

A. TF size comparison

The number and size of the TF coil and the arrangement of PF coils in a tokamak impacts the blanket design and sector segmentation. Reducing the number of TF coils will reduce the number of blanket segments and increase maintenance access at the expense of increased plasma ripple, unless the coil size is increased. The K-DEMO design with 16 enlarged TF coils has a plasma ripple of 0.093%; for the same coil size a 12 TF coil arrangement will have a ripple value of 0.53%. Moving the outboard leg out 0.6m brings the ripple down to 0.3%. For comparison the 5m HTS ST power plant design has a 0.57% ripple with 10 TF coils which reduces to 0.20% with 12 TF coils of the same size. The K-DEMO design used a graded, two-winding design to significantly reduce the cost of the enlarged 16 TF coil system; conversely the same design could be used to reduce the cost of an 18 close fitting coil system to arrive at a lower TF conductor cost. Although, an enlarged TF coil system will increase this component cost, this cost increase can be offset by the simplification in maintenance conditions attributed to larger vertical port openings, lower blanket part count, piping reductions and increased size of blanket sectors that allow internal space for blanket piping and midplane port openings that do not split the sector top-to-bottom. To further delineate between options and design choices made, a very simplified cost comparison is made looking at the TF and MC magnet designs of the represented 1000 MW devices developed for this study. Figure VI-1 shows an overlay of each magnet located at their reference machine design point with an ITER TF magnet included for size comparison as its dimensions are indicative of a coil size that can be transported to a field site. The ITER D-shaped TF coil weighs 360 tonnes and measures 16.5m high and 9m wide. ITER transportation itinerary can be used as a reference in defining possible limits for off-site fabrication. The heaviest transport item for ITER will weigh approximately 800 tonnes (including the 200-tonne, 352-wheel transport vehicle); the tallest will be 10.4-m high, the longest 33m, and the widest 9m (these maximum dimensions will not be attained simultaneously). The 10.4 by 9 dimension gives a diagonal dimension of 13.75m to set a maximum coil horizontal width to allow positioning a tilted TF coil while shipping, keeping in mind that coil case depth will reduce this value. All coils shown in Figure VI-1 fit within the ITER category of Highly Exceptional Loads (HEL) with dimensions of: 19.0 h x 12.5 w for the 5-m ST PP coil, 18.8 h x 12.3 w for K-DEMO and 13.5 h x 13.0 w for the TF coil of the PPPL

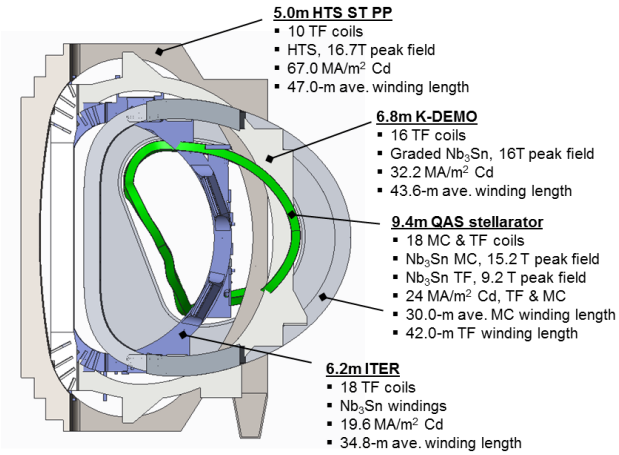

Fig, VI-1 Magnet systems located at each design point

QAS power plant design. The MC TF size is set by the type-B MC, defining the maximum width with the type-A coil setting the TF coil height. Given the ITER HEL shipping category moving the K-DEMO TF coil outboard leg out 0.6-m for a 12-TF coil, 0.3% ripple design, will increase the coil width to 12.9-m which is within the HEL shipping limit. If the 16 TF K-DEMO device were designed for horizontal maintenance the TF outboard leg would need to be moved further back to allow space for removal of a full blanket sector. Figure VI-2 illustrates a series of views showing the TF coil defined K-DEMO vertical maintenance design, re-sized to allow a sector module to be retracted in a horizontal fashion between TF coils. The result shows a coil width is increased to 14m from the existing enlarged 16 TF coil, vertical maintenance design which does not include the added structure at the outer surface

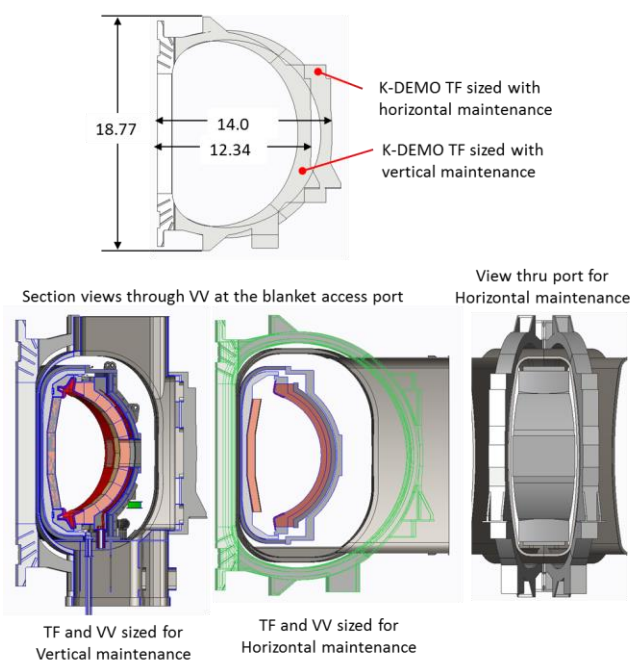

Fig. VI-2 TF coil sized for a horizontal maintained K-DEMO device

of the coil needed to reinforce the large unsupported magnet region against out-of-plane forces.

Minimizing on-site component fabrication lowers a power plant cost by limiting component specific skilled labor, reducing the number of specialized buildings and lowers schedule risks. An increase in TF coil size for horizontal maintenance of K-DEMO exceeds an ITER defined HEL shipping dimension. Larger sizes can be shipped but both the off-site manufacturing facility and the fusion site will need to be located where water transportation is feasible. Early involvement in transportation logistic is needed to minimize required on-site fabrication. Unfortunately for the tokamak options all large diameter PF ring coils fall into the category of on-site fabrication.

Along with a geometric size comparison a simple cost assessment of a major magnet cost component was made using cost data from ITER and K-DEMO [26][27]. The cost of SC strand is a major cost element of the magnet and represents a good metric for comparisons between concepts and affords insights to where cost reductions might be made. Strand data from ITER had a higher cost value (dollar per meter) than found in a recent K-DEMO magnet cost study. Since it was not clear what was contained in the ITER strand cost the more recent K-DEMO values were used in this exercise. The cost used in estimating the HTS cable has been assumed to be in the range of 5 - 10 times the cost of an Nb_3Sn winding design [27]. Table I provides TF and MC coil information on the three confinement options referenced against a similar set of ITER TF details. A reasonably comprehensive TF conductor cost analysis was done for the K-DEMO graded coil set resulting in a strand cost of less than $1B and a total cost of about $1.2B [26]. The K-DEMO derived strand cost of $3.04M per km was used in the two winding pack analysis that required 360 SC Nb_3Sn strands for the 10.2 T low field winding and 1800 SC strands for the 16 T high field winding; a factor of 5 difference in strand count. Applying the K-DEMO strand cost value, the total strand length, times a factor of 5 when operating at 16T and an additional multiple of the ratio of any peak field over 16T. This process was used to arrive at the strand cost values of Table I.

As example the calculated K-DEMO low field winding strand cost is $3.04M per km x 128.8 km or $392M. Using the strand cost and the length of the high field strand multiplied by a factor of 5 for a 16 T winding results in a cost estimate of $622M; or a total strand cost of $1.01B for the 16 TF K-DEMO design. If the K-DEMO TF magnet were designed with one winding pack the magnet strand cost would be $2.58B – showing the cost advantage for grading the winding. K-DEMO and the CFETR design both use a two winding pack designs to reduce the magnet cost. An assessment of complete layer wound graded designs also needs to be made to compare design and cost differences between the two approaches. Pursuing high field magnets for the purpose of reducing the size of a fusion device implies that the strand cost and volume of SC material within the winding design is lower than the cost of a competing larger major radius, lower filed design. High field TF coils also requires more structure to support the higher fields so adopting a multi-winding approach helps as the lower field winding takes up less conductor space allowing more space for structure.

The smallest major radius ST PP requires a large TF coil and although it has a smaller total conductor length the

equivalent HTS cost range from $6.4B to $12.7B, assuming a non-graded design. It is obvious that some form of grading of the winding is needed to reduce the winding cost along with further R&D development to reduce the cost of HTS. Finally, from the standpoint of SC strand cost the larger 9.4m QAS confinement option had slightly lower total winding length than K-DEMO, lower magnetic fields and the lowest strand value, $516M. It would take little effort to optimize the SL QAS design point where the accompanying TF magnet field is reduced to 9T where lower cost NbTi windings could be used. This would bring the total strand cost to be in the range of ITER or possibly lower. The peak field of the modular coil is too high to ever be able to design the coil using NbTi strands.

Table I. TF and MC superconductor strand cost

Component Details	ITER	5m ST PP	K-DEMO	QAS
Major radius (m)	6.2	5.0	6.8	9.4
Field on axis (T)	5.3	5.0	7.4	5.7
Peak TF field (T)	11.8	16.7	16.0	9.1
Peak MC field (T)	-	-	-	11.4
Operating curent (kA)	68	74	65	65
TF or MC conductor type	Nb3Sn	HTS	graded Nb3Sn	Nb3Sn
TF length per coil -high field (km)	4.60	7.80	2.56	5.88
TF length per coil -low field (km)			8.05	
MC length per coil (km)				3.66
number of turns - high field	134	162	60	126
number of turns - low field			180	140
No. TF coils and MC's	18	10	16	18
Total TF winding length -high field (km)	82.3	78.3	41.0	105.8
Total TF winding length -low field (km)			128.8	
Total MC winding length (km)				65.9
S/C high field Nb3Sn strand cost {M$)	289	1,241	622	226
S/C low field Nb3Sn strand cost {M$)			392	290
			1,013	516
HTS winding strand Cost (B$)		6.2 - 12.4		
K-DEMO strand cost w/o low field (B$)			2.58	

B. Blanket comparison

The size of the TF coil has a consequential impact on the blanket design regarding its segmentation and maintenance features. Table II shows a comparative breakdown between design options. The number of segments listed is based on the type of blanket used within the designs; solid ceramic breeding for K-DEMO and DCLL for ARIES-AT for example. Although maintenance issues can be associated with the blanket type, the purpose of this study is to address the segmentation numbers. K-DEMO and CFETR tokamak designs with enlarged TF coils have a lower blanket sector part count than the EU design which follows an ITER approach of close fitting TF coils surrounding the plasma. With 18 TF coils the number of EU blanket sectors increase to 90, significantly reducing vertical port maintenance access. The ARIES-ACT1 design with horizontal maintenance has the fewest sector count as full inboard/outboard sector modules are retracted with radial motion between adjacent (further enlarged) TF coils. The newly developed PPPL straight leg quasi-axisymmetric stellarator (SL QAS) incorporates continuous, 36-sector blanket sectors; sectors that need not be split in half in the radial direction to reduce the size to to allow it to be retracted through vertical ports. There is a wide variation in the designs of planned fusion confinement options. Is there a metric or methodology that can be used to gage the significance of one proposed option over another? The weight of a segment will increase as their number goes down, however there is a range where increased weight will not impact a vertical crane lift if it is planned as is the case within the K-DEMO design. Those options that use floor mounted positioning and lift systems may be negatively impacted. Designs with close fitting TF or MC's will result in reduced size vertical ports leading to larger number of smaller blanket sector modules, lower weight coil systems which translate into lower magnet capital cost of individual coils if the designs include grading of the coil winding. As detailed earlier a small magnet size will increase machine complexity and maintenance cost by lowering VV access.

The total volume of the blanket/shield system is defined by a number of variables (plasma parameters, breeding and shield requirements, piping details for power extraction, etc.). A rule of thumb for setting the size of the blanket/shield thickness is to assume 1m thick shell that surrounds the plasma, just outside the plasma scrape-off region. The caveat here is the assumption that the blanket/shield system envelop retains a 1m thickness as the machine size increases. If the wall loading is sufficiently reduced to allow a reduction in blanket/shield-support system thickness, the volume could remain constant with an increase in machine size. As example if the EU blanket/shield-support system thickness were 0.66m it would have the same volume as K-DEMO. An underline motivation is to define a blanket system design approach that reduces the required size of an AMF complex.

Table II. Blanket sector number comparisons between design options

Projects	No TF	Outboard Bkt Sectors: sectors per TF	Outboard Bkt Sectors: sub bkts per sector	Inboard Bkt Sectors: sectors per TF	Inboard Bkt Sectors: sub bkts per sector	Total Outboard: bkt sectors	Total Outboard: sub bkt modules	Total Inboard: bkt sectors	Total Inboard: sub bkt modules	Total Sectors	Total sub bkts
ARIES-ACT1	16	1	2	1	2	16	32	16	32	16 full	64
K-DEMO	16	2	10	1	8	32	320	16	128	48	448
	12	2	10	1	8	24	240	12	96	36	336
EU	16	3	10	2	8	48	480	32	256	80	736
	18	3	10	2	8	54	540	36	288	90	828
CFETR	16	2	8	1	5	32	256	16	80	48	336
	12	2	8	1	5	24	192	12	60	36	252
5m HTS ST	10	2	2	1	1	20	40	10	10	30	50
	No periods	Bkt sectors per period	Sub bkts per sectors							Total Sectors	Total sub bkts
Straight leg Sellarator	3	12	2	SL QAS blanket sectors are continuous						36	72

Using the 1m simple metric a comparison of the blanket volume between candidate machine designs can be made as indicated in Figure VI-3, listing blanket/shield volumes of four different designs; K-DEMO, SL QAS stellarator, ST PP and the EU DEMO. The 9m EU DEMO design has the largest blanket volume (1418 m^3) and the 9.4 SL QAS (964 m^3) device closely matches the 6.8m K-DEMO device with the

	Full blanket replaced		0.5m blanket replacement	
Option	**Vol (m^3)**	% EU size	**Vol (m^3)**	% EU size
K-DEMO	941.5	66.4	438.5	30.9
SL QAS	963.7	68.0	433.7	30.6
ST PP	998.6	70.4	468.9	33.1
EU DEMO	1417.5	100.0	666.1	47.0

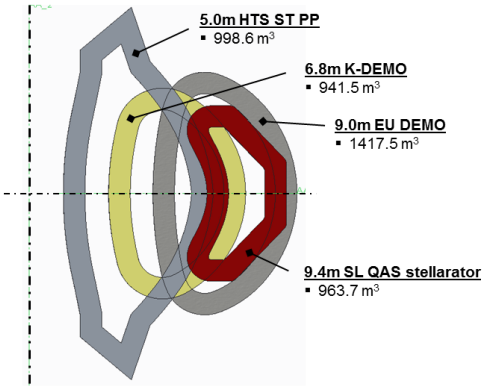

Fig. VI-3 Blanket volume comparison

smallest enclosed volume (942 m^3). The K-Demo represents a value that is 66.4% of the EU DEMO defined blanket volume. The significance of this value falls back to work that the EU DEMO team did in defining the DEMO Active Maintenance Facility (shown earlier in Figure IV-2) to perform blanket activation cool-down storage and maintenance functions; a facility size that turned out to be substantially larger than the ITER hot cell. To get a sense of the size of the AMF, Figure VI-4 shows a side-by-side comparison of the 119,000 m^3 ITER hot cell that is expanded in size to represent a 737,000 m^3 AMF building. One underlining factor in its sizing the

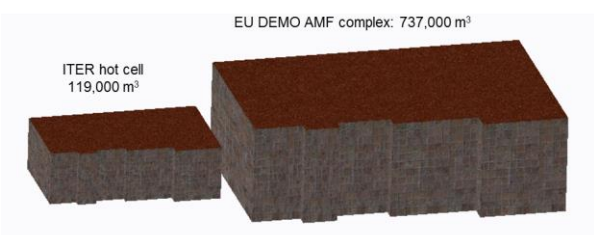

Fig. VI-4 Size comparison between the ITER hot cell and the equivalent sized AMF

AMF complex was the number and size of blanket sectors that must be stored and later processed. A worst-case maintenance strategy that uses 8 ports in parallel was selected, requiring a large number of remote handling equipment to support it [12]. To move the blankets required 32 casks and 42 casks for the divertor, these numbers included spares. When the casks are not operating they would be stored and maintained in the AMF. Another design feature that factored into the sizing of the AMF was the enclosed size of the in-vessel component storage frames, shown for a blanket module and divertor in Figure VI-5. Given the details of the developed AMF a question can be asked – how does device size, confinement option and basic machine design concepts play a role in sizing an AMF complex?

Fig. VI-5 AMF IVC storage frames

Although not an exact correlation the simple comparison of the 1m enclosed blanket volume can lead to some understanding of the impact of machine size and choice of confinement option. The three confinement options (K-DEMO, SL QAS and ST PP) details provided in the table of Figure VI-3 indicate that their smaller device size can potentially reduce the AMF complex by 30%, again assuming that the EU DEMO design retains the same blanket/shield system thickness. Would a 30% reduction in an AMF complex be sufficient to meet an economic criterion for a successful fusion power plant – probably not? Is there any design concept that can further reduce the size of the AMF – maybe? Figure VI-6 shows an 11.25º slice of the benchmark 1m blanket shell, progressing from a full simplified unit to segmented inboard/outboard sectors and finally to further refined sub-divided outboard blanket sector that assumes a 50% split (500 mm). If both the complete subdivided inboard and outboard sectors were transferred to the AMF as a complete unit there would be no change in the AMF building size, except for the potential 30% reduction due to K-DEMO's smaller size. If the blanket design and its maintenance scenario factored in the situation that the neutron radiation conditions vary substantially as function of position from the plasma then an early replacement may only be required for the front section of a 1m blanket. As an exercise a DCLL blanket design was defined and the front portion (500 mm) defined as the location where it needed replacement as defined in the EU AMF study. The remaining blanket can be a life time

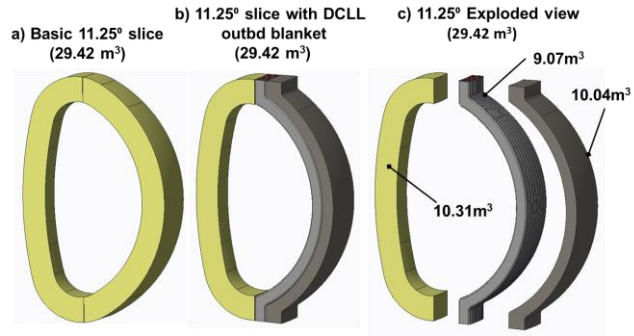

Fig. VI-6 Sector design progression moving to a possible outboard blanket arrangement of the 6.8m K-DEMO device

component, with the caveat that any sectors with penetrations would need additional (replicable) local shielding. If the blanket designers were challenged to develop a blanket design with replaceable inner sections then an AMF complex could be substantially reduced in size as indicated by the table to the far right of Figure VI-3. The table shows that the reduction of AMF ranges from 50% to about70%.

Another approach to consider in significantly reducing the size of the AMF is crushing all plasma facing blanket sub-sectors and shipping the remains to a central off-site depository facility. Figure VI-7 illustrates the component

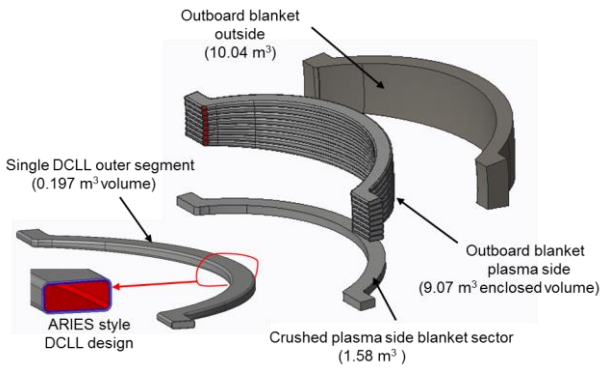

Fig. VI-7 Compaction of outboard plasma facing blanket

volume developed assuming an ARIES-AT style, 11.25º segment DCLL blanket design. A DCLL style blanket is used as it provides the simplest blanket form as once the PbLi is drained only a structure shell is left. Figure VI-7 also shows a separated plasma side outboard blanket (drawn with eight DCLL channels) pulled away from the outboard blanket, outer segment. A drained, single DCLL segment has an enclosed volume of 0.197 m^3 and eight crushed outer segments have a volume of 1.58 m^3. If one-half of the outboard plasma side blankets were crushed every four years as prescribed in an AMF paper, it would require a space of 73 m^3 to house the stacked units as illustrated in Figure VI-8. If the proposed design concept proved feasible it could bring the size of an AFT complex into the range of a typical PWR fuel processing building – especially if the cooled components were shipped to an offsite repository.

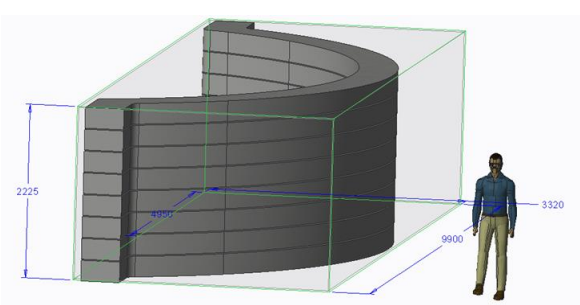

Fig. VI-8 Volume of eight crushed outer blanket sectors

C. Reactor building comparison

The device reactor hall is a major cost item in the make-up of a fusion power plant. A typical perception is that small major radius plasmas result in smaller reactor sizes and lower cost facilities; however detailed physics specifications and design choices made in defining a particular confinement option plays a greater role in determining the size of a fusion reactor hall. To help make some comparisons between confinement options, an early defined ITER reactor hall was modified as needed to accommodate the different confinement options being compared. Figure VI-9 provides the basic overall dimensions of this rendition of the ITER reactor hall which has an enclosed volume of 419,726 m^3. The reactor hall pit was expanded in size as needed to house each device, the height of the building was increased when needed to accommodate taller TF magnets, space on one side of the building was lengthened to locate NB systems (as with ITER) and the ITER space was retained in other areas for heating and

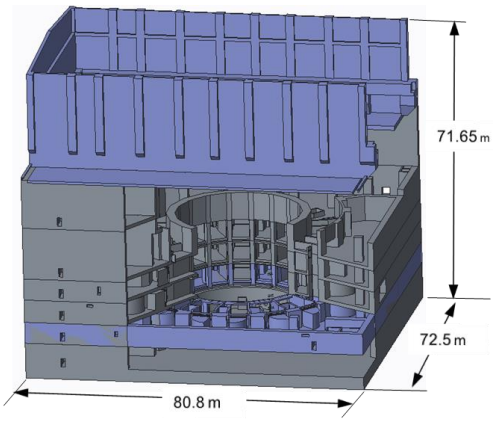

Fig. VI-9 Early version of ITER Test Cell

auxiliary systems which has a smaller footprint. The 9.6m K-DEMO device includes 40 MW for two (and possible three) NB's, 30 MW of LH, 10 (maybe 20) MW of IC and 20 MW of EC. The NB's for K-DEMO operation was specified as an early stage system that hopefully may not be needed with further research and operation experience. The resized ITER building shown in Figure VI-10 follows the ITER prescription housing the K-DEMO device with two NBI units included. A

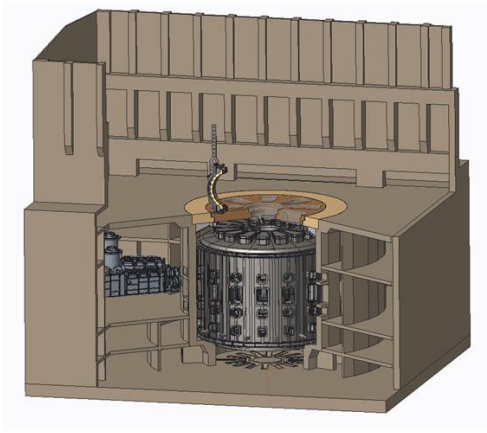

Fig. VI-10 6.8m K-DEMO power plant reactor building

third beam could be incorporated without a change in the building width.

In defining the building for the 5m ST device JT-60SA NNBI's are used to define a reactor hall footprint for heating systems and JT-60SA power supplies, located in a walled off

space behind the beams. To increase the injected power of each beam, an additional source was added to the beam, bringing the beam power to 15 MW. Space is available to accommodate six JT-60SA styles NNB's. It was understood that these beams are not designed for the activation seen in a power plant or developed for remote maintenance as the ITER beams are but their size is representative of what might be needed for a high density ST plasma. The resulting 5m ST reactor building is shown in Figure VI-11. A 32% building reduction could be realized if ITER beams and power supplies were used. A much further reduction is possible if the smaller NB footprint of a negative ion source photoneutrilzation based

Fig. VI-11 5m HTS ST power plant reactor building

neutral beam system proves feasible [30].

The straight leg QAS stellarator test cell was sized with the requirement of approximately 20 MW of auxiliary heating to achieve ignition, as prescribed in the ARIES-CS study and no NB's. The ITER building was altered to accommodate the conditions of the QAS configuration: the overall building height was reduced for the shorter QAS device; the reactor hall pit diameter was increased to accommodate the machine dimensions of the larger 9.4m stellarator and with no NB requirements the building took a square shape, sized by the non NB side of the ITER building. The larger diameter segmented shield plug above the device core was reinforced by a center structural column that is located in the large unobstructed center region of the stellarator. Figure VI-12

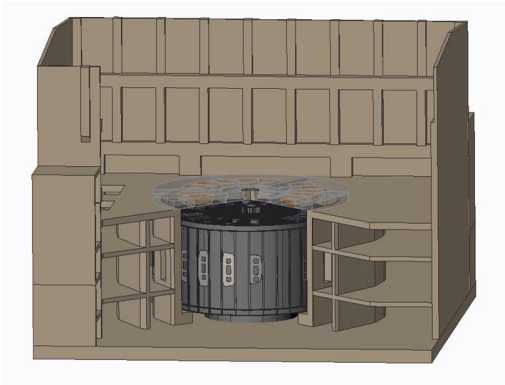

Fig. VI-12 9.4m SL QAS power plant reactor cell

shows the 9.4m SL QAS device in the reactor building.

The ITER building was used as a template to size the three representative confinement designs and a Westinghouse PWR containment building was used to help judge the economics of the resulting designs from a simple size perspective. Figure VI-13 show an isometric view of the PWR containment building with a planned fuel building attached. A section view of the containment building is shown to the right. The PWR containment building is shown along with the buildings developed for the three different confinement designs, the ITER reactor hall and hot cell and the EU AMF DEMO complex – all illustrated in Figure VI-14. Although the building design details were not developed in great detail sufficient consistency in the design process was used to

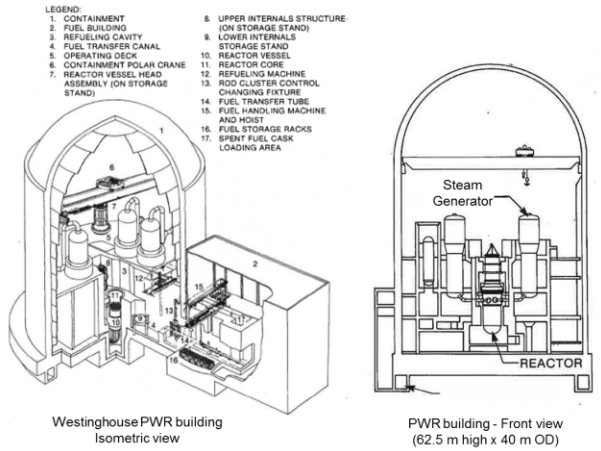

Fig. VI-13 Westinghouse PWR building

generate comparative results.

The smallest reactor cell size came from the largest major radius device – the SL QAS stellarator. The smallest major radius device required the largest reactor cell, predominately driven be the requirement and number of NNBI's needed for plasma heating and current drive. One significance comparison is the size of the AMF DEMO complex compared with the Westinghouse PWR containment building, keeping in mind that the containment building is larger than the similar planned fuel building shown in Figure VI-13. The need for a large complex external storage/maintenance facility will present an economic liability to the success of a fusion power plant.

VII. Conclusion

A review of recent studies covering three confinement options were presented; the scaling the ST option to a common 1000 MW power plant was developed to provide better comparisons of key cost elements and relevant fission power plant information was included to benchmark related fusion components. Concepts that simplify the device configuration, improve maintenance features or have cost reduction possibilities also was provided.

The motivation for writing this paper was to look at a very conceptual level how the designs within and between confinement options compared and how they relate to a fission power plant. Some general comments include:

- Major radius alone is not a good metric in determining the size and cost for a fusion device.

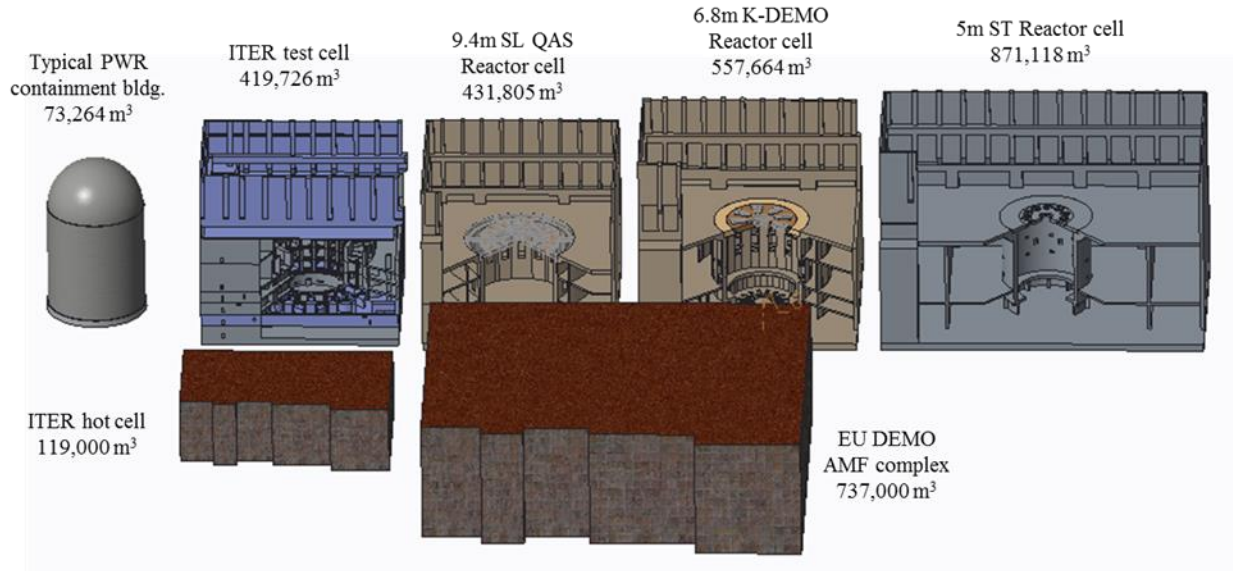

Fig. VI-14 Comparison of reactor cell buildings sized for the 5m ST, 6.8m K-DEMO and 9,4m SL QAS stellarator

- Grading of the TF conductor winding can significantly reduce the cost of the TF system.
- Blanket designs and maintenance strategies may be available that reduces the volume of in-vessel blanket components to minimize the size and complexity of any external storage/maintenance facility.
- Close fitting TF or MC's designs result in larger number of blanket sector modules, lower weight magnet systems which translate into lower magnet cost but at the expense of increased machine complexity, lower VV access and greater maintenance difficulties than afforded by designs with enlarged TF and MC's

One obvious conclusion, given all the design options being considered, fusion is not converging to one design within each confinement option – setting the stage to follow a high cost fission path. Conferences can provide engagement of ideas and design details but it lacks the venue for persistent across the table, back and forth discussions needed to review a design concept, argue its merits and build a consensus to adopt a baseline approach. Within any one organization (EU DEMO, K-DEMO, CFETR…) this can be done but to straighten each concept and hopefully to define one approach (heeding fission experiences) an international engineering meeting directed toward the design review of proposed DEMO options could prove valuable. It also might be time to include participation of fission successful companies from South Korean, China and other fusion interested construction companies.

One premise of this paper was to set a fusion enhancement value of 25% premium over the capital cost of a fission plant, giving a fusion plant cost in the range of $7.5 billion to $11.25 billion if built in the U.S. The exercise performed did not have the depth to directly answer this question specifically but looking at two major cost items makes one pause and consider the cost implication in what has been designed. Articles have been written stating that ITER cost will rise to $16.4 from an initial cost estimate [29] to $23 billion before it's completed [28]. ITER is a first of a kind experimental device developed through the collaboration of many countries and directed by a complex organization that does not promote project design and construction efficiencies…but can the cost be sufficiently reduced to be within a postulated 25% safety enhancement premium over the cost of a fission power plant? Although not current, early ITER cost breakdowns the magnet system represented 28% of the direct capital cost; buildings represented 14% (the next highest cost component) [29]. The magnet breakdown included all structure, conductors, and leads for both TF, PF and correction coils. Of the total magnet system cost, 50% was for the cost of conductors. Looking back at Table I the SL QAS design strand cost was 1.8 times ITER strand cost, K-DEMO is 3-1/2 times the ITER strand cost, and the 5m ST HTS low side strand cost is 21.5 times ITER strand cost. HTS strand cost will be reduced over time with technology advancement but without an underlying funding cost reductions will not be realized in any timely manner. There is a real chance that the a SL QAS system can be sized to allow NbTi to be used as the TF conductor which will significantly reduce the strand cost and bring it in line with or lower than the strand cost of ITER. The strand cost is even a greater percentage of the total cost in the simplified K-DEMO TF design and its reduction has a greater impact on the overall TF cost.

The QAS building is 3% larger than ITER's reactor hall; K-DEMO is 33% larger but will be reduced to the QAS size if beams are not needed. The 5m ST reactor cell is twice the size of the ITER reactor hall as for now its high density plasma is best matched with NNBI systems – ITER beams or advancements in beam designs is needed to significantly impact this condition.

A QAS device has no PF coils, needs less diagnostics and much less auxiliary heating. Yes the inboard side of the modular coils has a more complex geometry but it can be designed and fabricated. Being a steady state device that is capable of tokamak style vertical maintenance, it probably

offers the best chance of economic success – but the underling physics must be authenticated. A SL QAS experimental device needs to be built to validate this concept. K-DEMO and CFETR are underpinned by a strong physics foundation. Additional design needs to be done to determine if further reduction in the TF winding cost can be achieved; possibly adding a third winding pack or grading the full winding. A large cost component for all fusion options will be imposed by any large external blanket sector storage and maintenance facility. Blanket designs and maintenance schemes need to be identified which significantly reduces the size of this external facility.

Improvement in plasma confinement (or increased H factor) is being pursued within spherical tokamak experiments and through specific lithium divertor studies. If successful liquid metal divertors could simplify the PF arrangement and possibly offer improved machine size optimization. A promising method to accomplish this is through the introduction of liquid lithium in the design of the divertor and FW systems where it has been suggested that enhanced stability and energy confinement can be achieved [31][32][33] – current experimental devices need to pursue this with greater urgency.

Finally, within an extended time period for the start of ITER's first plasma and the longer horizon for DT operation and any fusion DEMO device the advancement of alternate energy options will continue – it's hoped that the economic development of fusion will progress along with physics advancements so that a competitive fusion energy option can be establish.

ACKNOWLEDGMENT

The author would like to acknowledge the physics input and insightful discussions from Jon Menard, years of discussions and editorial comments from Hutch Neilson, magnet winding details form Yuhu Zhai and Keeman Kim. Appreciation is also given to Keeman Kim and Kihak Im for the opportunity to develop some of the design concepts shown on the South Korean K-DEMO device and Jingang Li for access and input into the Chinese CFETR DEMO design.

REFERENCES AND FOOTNOTES

[1] Nuclear Power Plant Construction Costs, Synapse Energy Economics, Inc., July 2008.
[2] The Economics of Nuclear Power, updated January 2017.
[3] How to build a nuclear-power plant, The Economist, Print edition/Business, Jan 2017.
[4] NuScale's Small Modular Nuclear Reactor Keeps Moving Forward, James Conca, contributor, March 2017
[5] Westinghouse publication, 2014
[6] N. Shulyak, "Westinghouse Small Modular Reactor: Taking Proven Technology to the Next Level", Presented to the IAEA INPRO Dialogue Forum, Vienna, Oct 2011.
[7] Advanced Construction Methods for New Nuclear Power Plants, IAEA publication
[8] Construction Practices in Nuclear Power Plants, The Masterbuilder Bureau, Sept 2014.
[9] How much does nuclear power actually cost, The Energy, by Barry Brook, Aug 2012
[10] A. E. Costley, "Initial Investigation of Diagnostics in Support of Fusion Pilot Plant Studies", PPPL - 4720, Nov 2011.
[11] J. Thomas, et al., "DEMO Active Maintenance Facility concept progress 2012", Fusion Engineering and Design 89(2014) 2393-2397
[12] O. Crofts, J. Harman, "Initial Investigation of Diagnostics in Support of Fusion Pilot Plant Studies", Fusion Engineering and Design 89(2014) 2383-2387
[13] A. Loving, et al., "Pre-conceptual design assessment of DEMO remote maintenance", Fusion Engineering and Design 89(2014) 2383-2387
[14] A small, modular, efficient fusion plant, MIT News, Aug 2015
[15] A. Sagara, et al., "Review of stellarator/heliotron design issues towards MFE DEMO", Fusion Engineering and Design 85(2010) 1336-1341
[16] T. Brown, et al., "Engineering optimization of modular coils lead to improvements in stellarator maintenance", SOFE conference, May 2015
[17] D. Gates, et al, "Recent advancements in stellarator optimization", 26th IAEA Fusion Energy Conference, Oct 2016.
[18] T. Brown, et al., "Results of Availability Imposed Configuration Details Developed for K-DEMO", 12th International Symposium on Fusion Nuclear Technology, Sept 2015
[19] K. Kim, et al., "A preliminary conceptual design study for Korean fusion DEMO reactor", Fusion Engineering and Design 88(2013) 488-491
[20] T. Brown, et al., " Progress in developing the K-DEMO device configuration", 25th Symposium on Fusion Engineering (SOFE), 2013
[21] T. Brown, et al., "Development of the 3m HTS FNSF Device and the Qualifying Design and Engineering R&D Needed to Meet the Low AR Design Point", 26th IAEA Fusion Energy Conference, Oct 2016.
[22] J. Menard, "Studies of Next-STEP Spherical Tokamaks Using High-Temperature Superconductors", 22nd Topical Meeting on the Technology of Fusion Energy (TOFE), Aug 2
[23] "Taming thermonuclear plasma with a snowflake", News from the 52nd annual meeting of the APS Division of Plasma Physics, Public release: 8-Nov-2010
[24] T. D. Rognlien, et al., "Comparison of ELM heat loads in snowflake and standard divertors", International Conference on Plasma Surface Interactions Aachen, Germany May 21, 2012 through May 25, 2012
[25] Menard, J. E., September 2016, personal communications
[26] Keeman Kim, April 2017, personal communications.
[27] Y. Zhai, April 2017, personal communications.
[28] T. Hoium, The Motley Fool, April 2017
[29] U.S. Department of Energy Assessment of the ITER Project Cost Estimate, Nov 2002
[30] A. Simonin, et al., "Negative ion source development of a photoneutralization based neutral beam system for future

fusion reactors", New J. Phys. 18 (2016) 125005
[31] Richard Majeski, May 2017, personal communications.
[32] Catto, P. J., Hazeltine, R. D., "Isothermal tokamak", Physics of Plasmas 13, 122508 (2006)
[33] Zakharov, et al., "Ignited spherical tokamaks and plasma regimes with Li Walls", Fusion Engineering and Design 72 (2004) 149-168