MLM-1760(LD)

MLM-1760(LD)

Application of Statistical Quality Control Techniques to Detonator Fabrication: Feasibility Study

J. Frank Jones

This document is
PUBLICLY RELEASABLE
(OSTI)
Authorizing Official
Date: 6-29-09

April 20, 1971

MOUND LABORATORY
Miamisburg, Ohio
operated by

Monsanto

MONSANTO RESEARCH CORPORATION
a subsidiary of Monsanto Company
for the

U. S. ATOMIC ENERGY COMMISSION
U. S. Government Contract No. AT-33-1-GEN-53

Application of Statistical Quality Control Techniques to Detonator Fabrication: Feasibility Study

J. Frank Jones

Issued: April 20, 1971

LEGAL NOTICE

This report was prepared as an account of work sponsored by the United States Government. Neither the United States nor the United States Atomic Energy Commission, nor any of their employees, nor any of their contractors, subcontractors, or their employees, makes any warranty, express or implied, or assumes any legal liability or responsibility for the accuracy, completeness or usefulness of any information, apparatus, product or process disclosed, or represents that its use would not infringe privately owned rights.

MONSANTO RESEARCH CORPORATION
A Subsidiary of Monsanto Company

MOUND LABORATORY
Miamisburg, Ohio 45342

operated for

UNITED STATES ATOMIC ENERGY COMMISSION
U.S. Government Contract No. AT-33-1-GEN-53

SUMMARY

A feasibility study was performed on the use of process control techniques which might reduce the need for a duplicate inspection by production inspection and quality control inspection. Two active detonator fabrication programs were selected for the study. Inspection areas accounting for the greatest percentage of total inspection costs were selected by applying "Pareto's Principle of Maldistribution." Data from these areas were then gathered and analyzed by a process capability study.

INTRODUCTION

This study was performed to determine the feasibility of more extensive use of statistical quality control techniques in the explosive component production process which might reduce the need for a duplicate inspection by production inspection and quality control inspection personnel. A concept called "Pareto's Principle of Maldistribution" was used to organize information to logically decide what areas of the production process were most susceptible to improvement. If scrap and other losses are analyzed by these methods, one will determine that the following principle holds almost universally.

A small number of areas where losses might occur will usually account for the major portion of those losses. For example:

- 3 departments out of 10 will cause approximately 80-90% of all losses.
- 3 machines out of 10 will cause approximately 80-90% of all losses.
- 3 people out of 10 will cause approximately 80-90% of all losses.
- 3 defect types out of 10 will cause approximately 80-90% of all losses.

Pareto's Principle was applied in this study to determine those inspection areas that accounted for the greatest percentage of total inspection costs.

After the area was identified by Pareto's Principle it was further examined by a process capability study. The process capability study is a basic technique for analyzing data. "Capability" means the natural or undisturbed performance after extraneous influences are eliminated. In manufacturing terminology, process capability refers to the inherent ability of the process to turn out similar parts: the best distribution that can be maintained in statistical control for a sustained period of time under a given set of conditions.

DISCUSSION

Two active detonator fabrication programs were selected for this study. For the purpose of this report, these programs will be referred to as

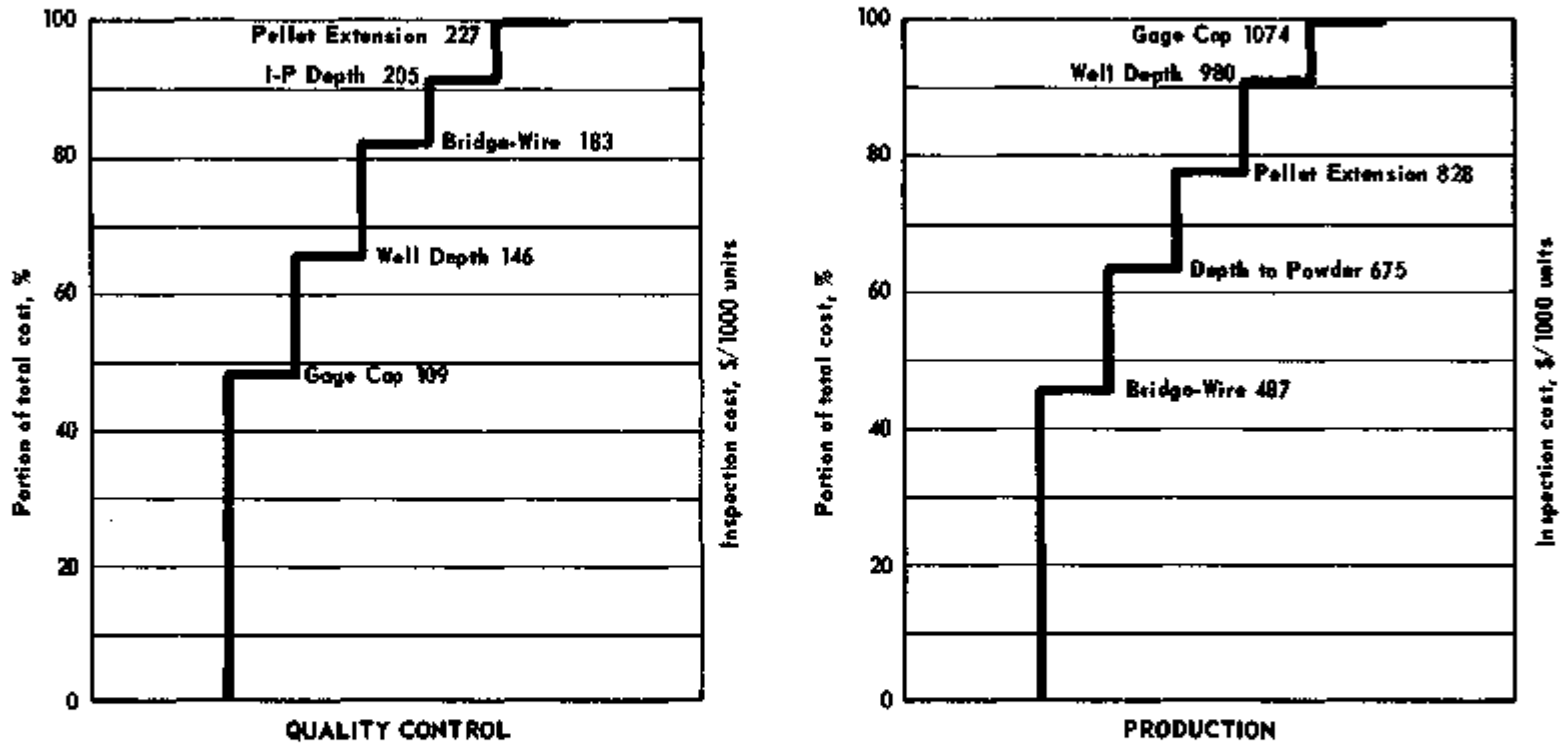

FIGURE 1 - Pareto distribution of Detonator A inline inspection costs.

Detonator A and Detonator B. As a first step, Pareto distribution charts were prepared showing quality control inline and production inspection costs. A review of the Pareto distribution chart for Detonator A revealed that 48% of the total quality control inline inspection cost was expended on the gage cap inspection (Figure 1). In the assembly process of the detonator no gap may exist at the interface of the powder train and the end cap (see Figure 2, Items 1 and 2). The gap is controlled by inverting the end cap (Item 1, Figure 2), measuring, and then assembling the end cap and remeasuring to the same reference. This is the gage cap inspection. As a result of the high percentage of total quality control inline inspection cost expended on the gage cap inspection, this operation was selected for examination. Data were collected and a process capability study was conducted (Table 1 and Figure 3). The results indicate that 100% inspection by production inspectors could not be eliminated unless a defect rate of 5% or larger is acceptable. However, the quality control inspection can be relaxed from 100% to some smaller sample. This will reduce inspection cost without sacrificing quality. Also, the results of the production inspection measurements are recorded and are available for review by quality control engineering personnel.

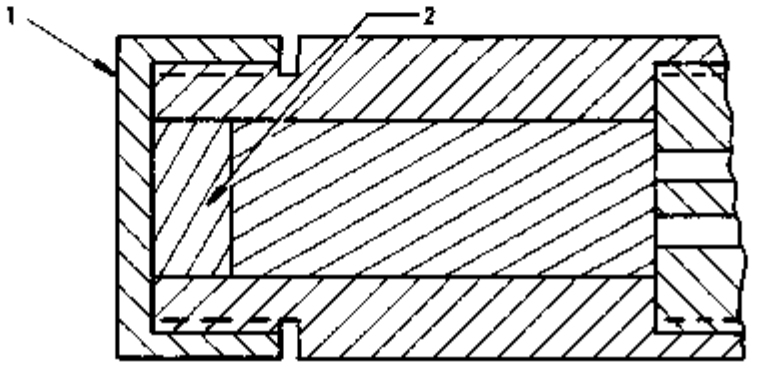

FIGURE 2 - Cross section of Detonator A showing items involved in gage cap inspection.

A review of the Pareto distribution chart for Detonator B reveals that 75% of the production inspection cost is expended on the bridgewire and slot inspection (Figure 4). At present, these inspections are performed 100%. Random sampling and control charts cannot be recommended at this time. The critical nature of this operation and the inconsistency of present tooling dictates stringent inspection.

The well depth inspection is the next item on the Pareto distribution chart (Figure 4); 100% production inspection with quality control verification is in effect. This inspection consists of gaging from the top of the sleeve to surface "A" of the header (Figure 5). Here again, data were collected and a process capability study was conducted (Table 2 and Figure 6). The results indicate that there is a possibility of eliminating the production 100% inspection. Past history, of 600 assemblies, shows a 1% reject rate, and the $\overline{X}$ and R control charts on the current data show that the process is in control. The six-standard-deviation

Table 1

PROCESS CAPABILITY STUDY FOR DETONATOR A CAP ASSEMBLY
(0.0000 ± 0.0005-in. SPECIFICATION)

Range (in.)	Histogram for: All 105 Assemblies	Histogram for: Last 63 Assemblies
0.0007 & 0.0008	xx	
0.0005 & 0.0006	x	
0.0003 & 0.0004	xxxxxxxxxxx	xxxxxx
0.0001 & 0.0002	xxxxxxxxxxxxxxxxxxxxxxxx	xxxxxxxxxxxxxxxxxxx
-0.0001 & 0.0000	xxxxxxxxxxxxxxxxxxx	xxxxxxxxxxxxx
-0.0003 & -0.0002	xxxxxxxxxxxxxxxxxxxxxxxx	xxxxxxxxxxxx
-0.0005 & -0.0004	xxxxxxxxxxxxxxxxxx	xxxxxxxxx
-0.0007 & -0.0006	x	
-0.0009 & -0.0008	x	
-0.0011 & -0.0010	x	
n	105	63
$\overline{X}$	-0.00009 in.	-0.00007 in.
s	0.00031 in.	0.00024 in.
$\overline{X}$ + 3s	0.00083 in.	0.00067 in.
$\overline{X}$ - 3s	-0.00102 in.	-0.00080 in.
Significant Departure from Normality	Not significant	Platykurtic approximately at 1% level
Expected % Defective above USL	3	1
Expected % Defective below LSL	9	4
Actual No. of Rejects	5	0

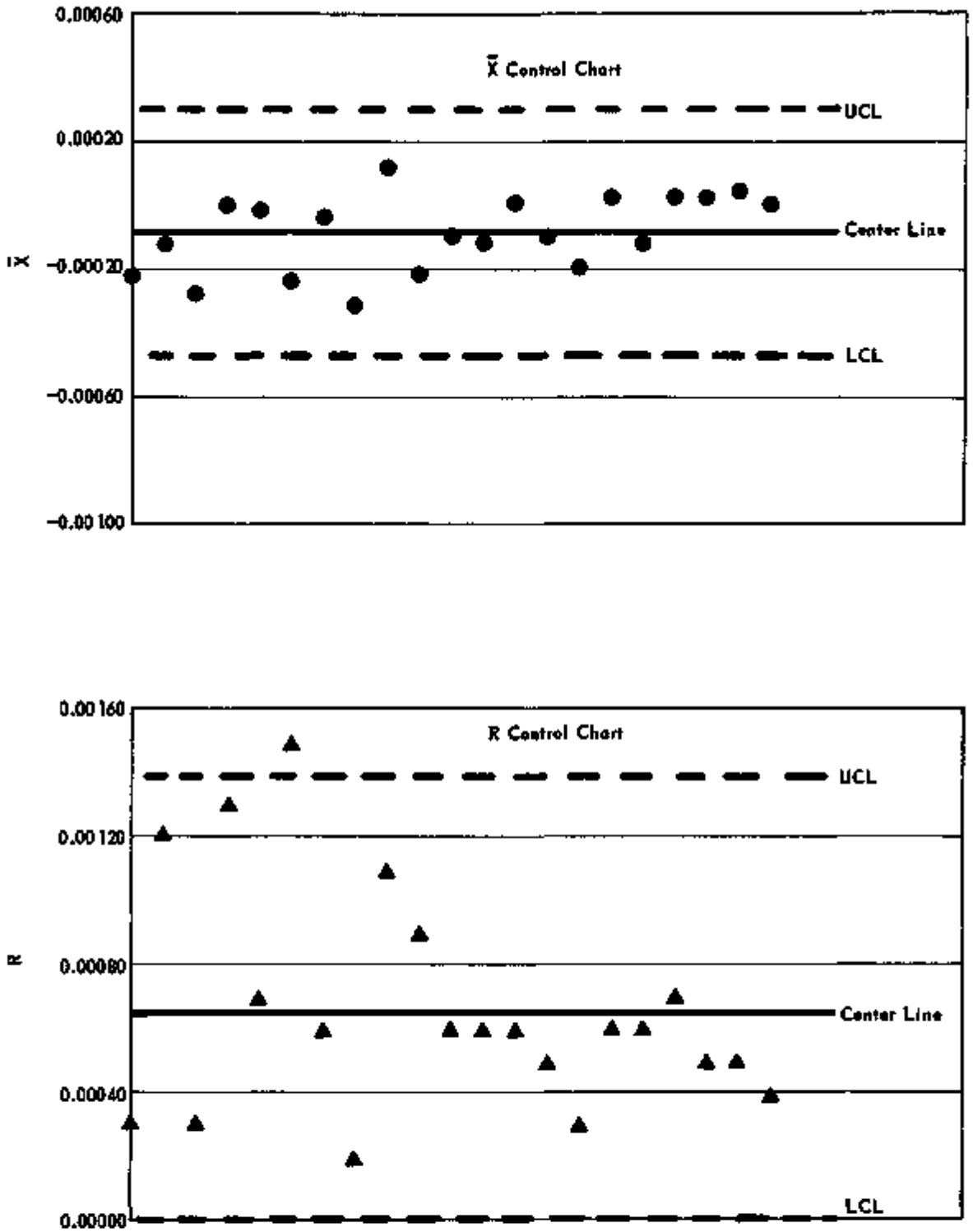

FIGURE 3 - Control charts for Detonator A cap assembly inspection.

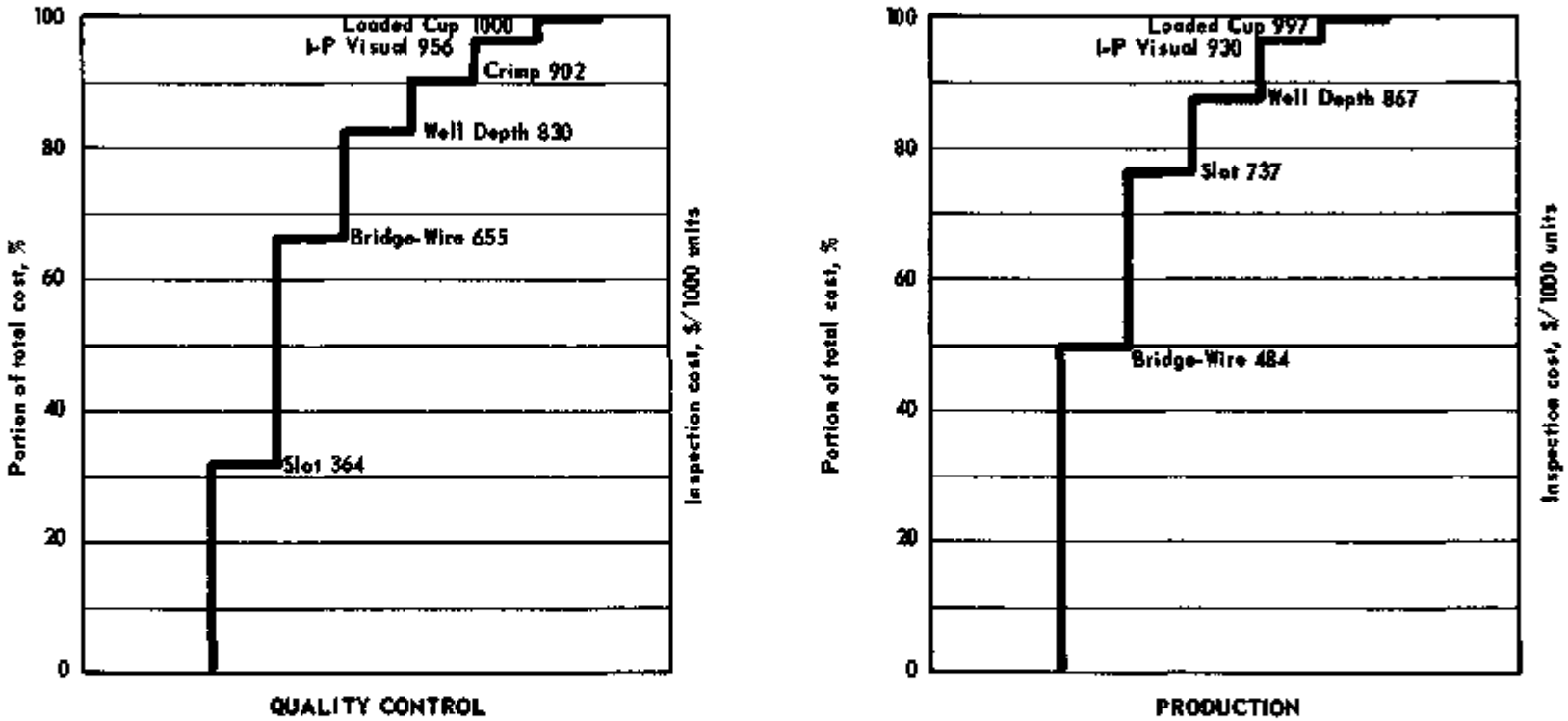

FIGURE 4 - Pareto distribution of Detonator B inline inspection costs.

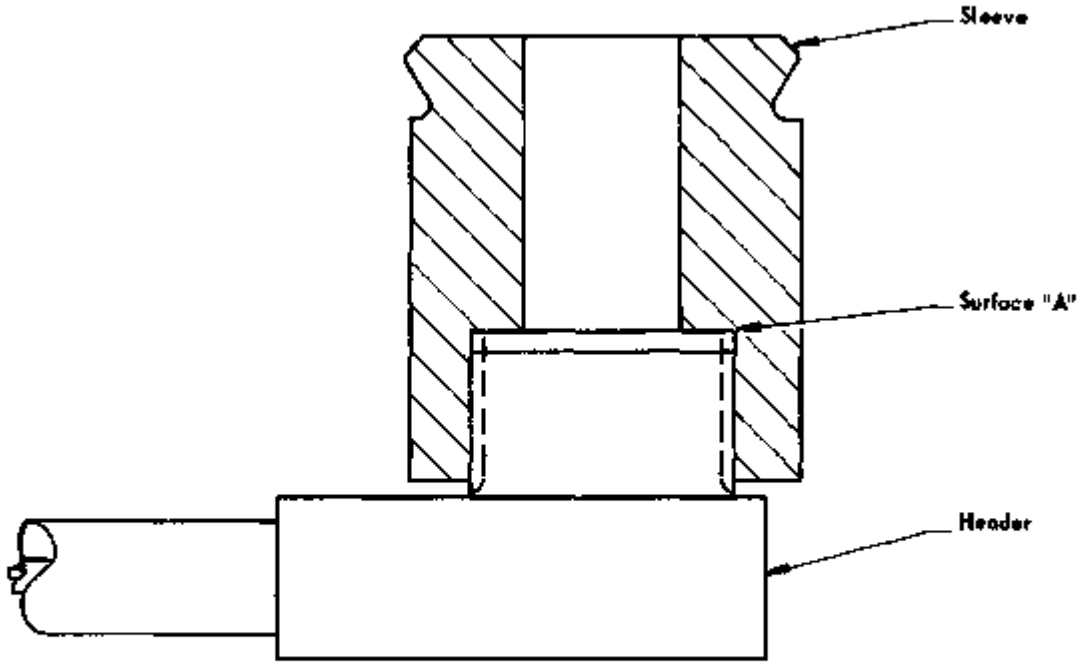

FIGURE 5 - Component portions of Detonator B.

(6σ) value is slightly less than the tolerance spread. Thus, if the distribution could be centered there would be no rejects.

A process capability study was also conducted on the mold used to produce the header for Detonator B (see Figure 7 for dimensions of interest on the header). The tabulated results are included as Table 3. As a result of the analysis we have now reduced the inspection for those dimensions which show an expected percentage defective of zero.

CONCLUSIONS

The above studies, although limited to selected areas of two programs, point out the merit of statistical quality control and that the need for duplicate inspection can be reduced. Proper use of statistical quality control techniques provides production personnel from the operator to the plant manager with factual quality information. It lends itself admirably to cost reduction, points out areas of over- or under-inspection, and quite often results in specification changes to bring the specification tolerance within the natural tolerance.

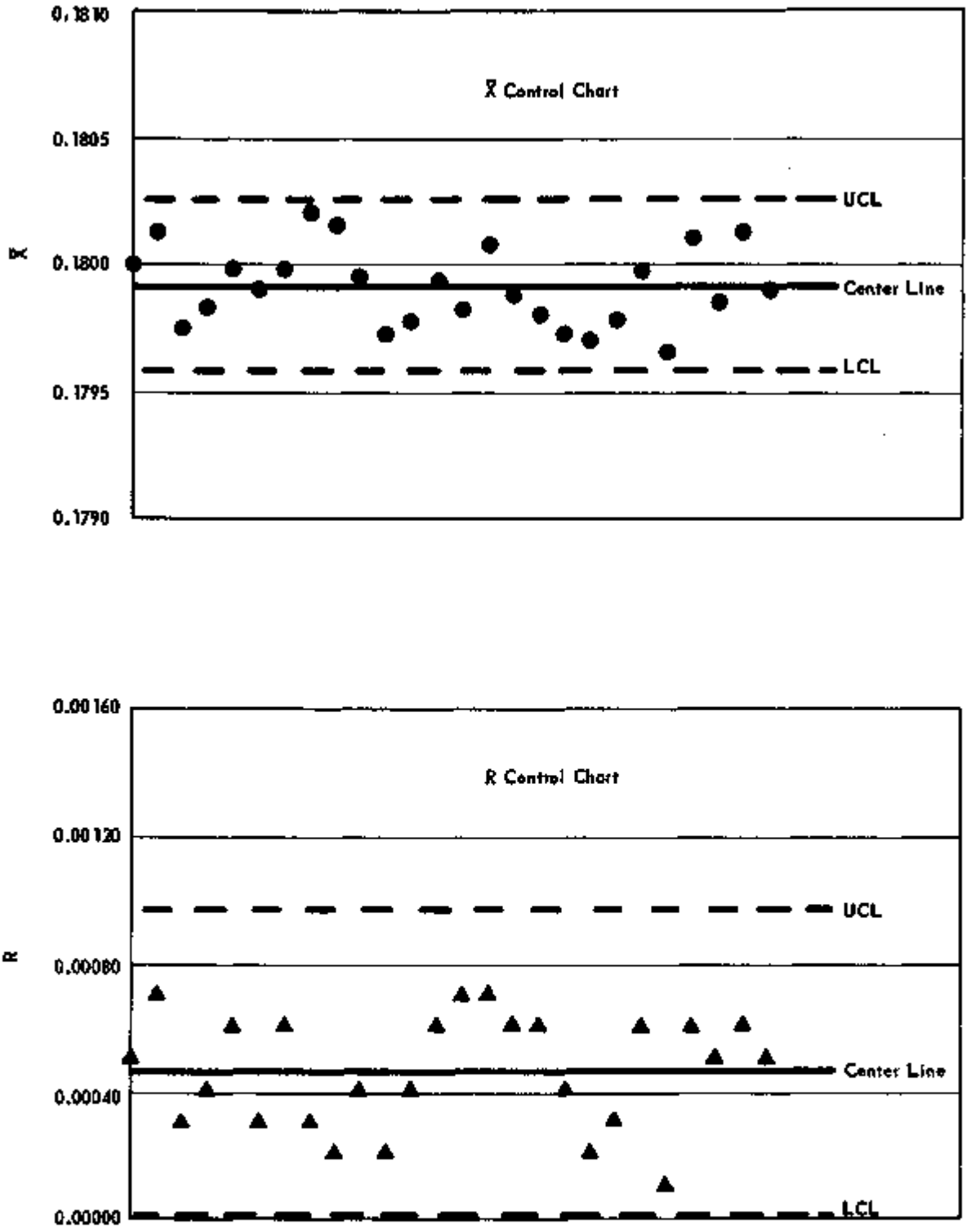

FIGURE 6 - Control charts for Detonator B well depth inspection.

Table 2

PROCESS CAPABILITY STUDY FOR DETONATOR B WELL DEPTH
(0.1800 + 0.0010, - 0.0005 in. SPECIFICATION)

Cell Midpoint (in.)	Histogram
0.1803	x
0.1802	xxxx
0.1801	xxxxxxxxxx
0.1800	xxxxxxxxxxxxx
0.1799	xxxxxxxxxxxxxxxxxxxx
0.1798	xxxxxxxx
0.1797	xxxxxxxxxxx
0.1796	xxxxxxxxxxxxxxxxx
0.1795	xxxxxxxxxxxxxxxxxxx

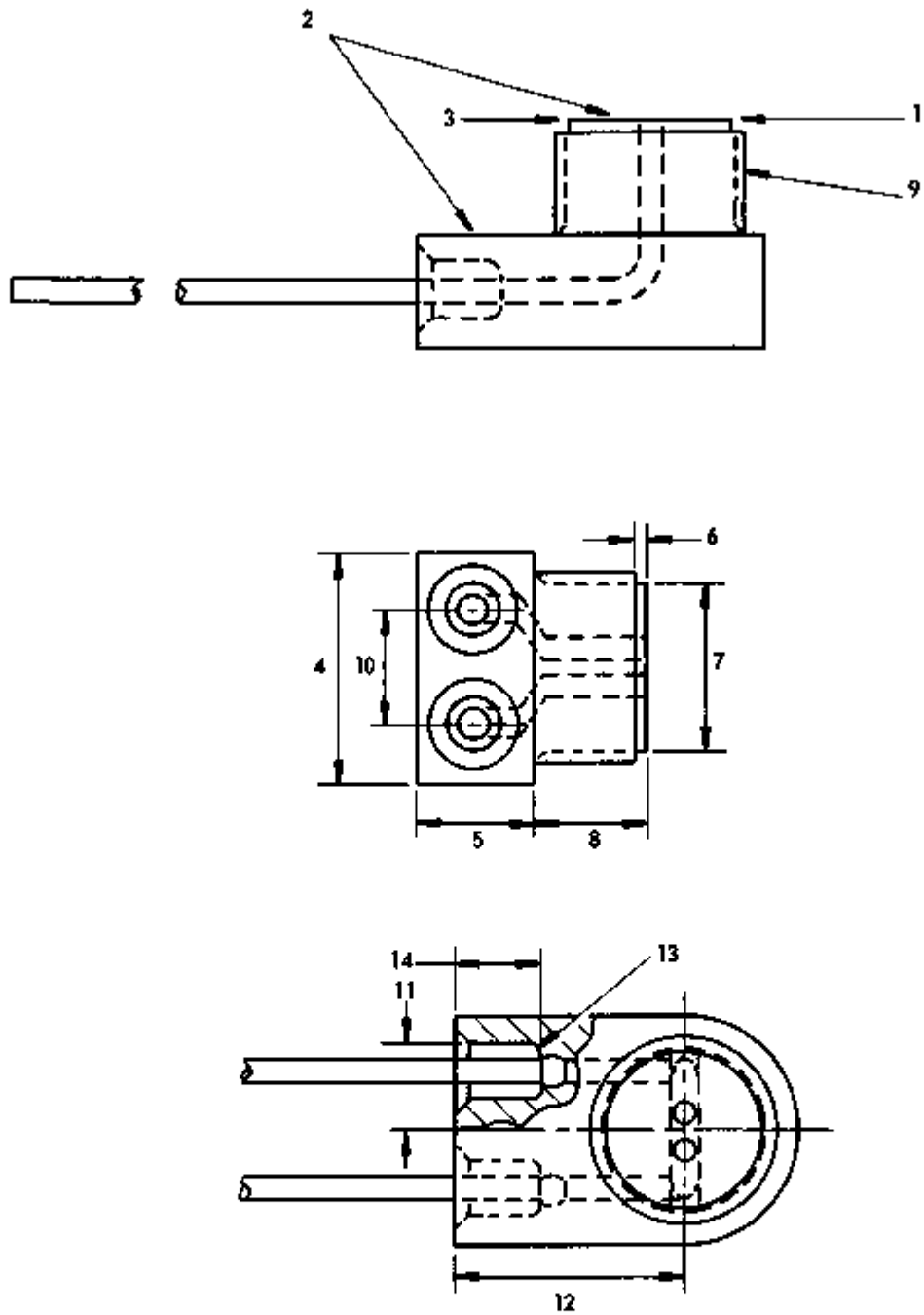

FIGURE 7 - Three views of Detonator B showing dimensions of interest in the process capability study for the mold.

Table 3

DETONATOR B HEAD QUALIFICATION OF MOLD NO. 3

Dimension	Identification on Figure 7	Number of Heads	Cavity 1 Expected % Defective	Cavity 1 Number of Defects	Cavity 2 Expected % Defective	Cavity 2 Number of Defects
Flatness Surface A 0.0005* Maximum	1	18	0	0	0	0
Parallelism A to B within 0.0010 Total	2	18	1	0	5	0
Finish 16 Surface A	3	18	6	0	25	0
Width 0.197 - 0.203	4	7	0	0	0	0
Thickness 0.095 - 0.105	5	7	0	0	0	0
0.007 - 0.017	6	18	2	0	1	0
0.145 - 0.147	7	7	0	0	0	0
0.097 - 0.105	8	7	1	0	0	0
Thread Dimension Major Diameter 0.1633 + 0.0000, - 0.0032	9	18	0	0	0	0
Centerline Distance 0.050 ± 0.002	10	7	29	1	0	0
Countersink Diameter 0.050 ± 0.005	11	7	0	0	0	0
Centerline Distance 0.190 - 0.210	12	7	0	0	0	0
0.075 Max. Diameter Countersink	11	7	0	0	0	0
Countersink 90° ± 10°	11	7	0	0	0	0
Radius 0.010 ± 0.005	13	7	22	0	14	0
Well Depth 0.075 ± 0.010	14	7	0	0	0	0

*All dimensions are in inches unless otherwise stated.

R. P. Ratay, Editor