1315

[redacted]

TCG-NNT-1

SANDIA SYSTEMATIC DECLASSIFICATION REVIEW

1st Review Date 10/29/98
Authority ADC ADD
Name RBClann
2nd Review Date 11/04/98
Authority ADD
Name W Layne

Determination (Circle Number)
1 Classification Retained
2 Classification Changed to U
3 Contains No DOE Classified Information
4 Coordinate With
Contains UCAI?
Comments
OK for Opennet

UNCLASSIFIED

JUL 7 1954
Case No. 433.00
Ref. Symbol: 1611-(217)
Project No. ET-1698
Completed 10/16/54

MR. L. A. DUNN - 1284

Re: Drop and Vibration Tests of H-188 Container

Object of Test

These tests were conducted to determine the effects of low frequency vibration and impact upon the H-188 container and its packaged items. These packaged items included two MC-154's, and one MC-152 with an internally mounted MC-129 and MC-222.

Authorization for Test

INVENTORIED

This test was requested by Division 1284 in a Work Order Authorization dated September 11, 1953. Mr. W. E. Baker was the consultant.

MAR 7 '55

4162

Summary of Results

INVENTORIED

JG 6 964

3427-1

The largest accelerations measured under vibration for the packaged MC-152 were of the order of approximately one-half of the excitation acceleration in axis I, parallel to the container diameter. In axis II, perpendicular to the container diameter, the packaged item reached the magnitude of the excitation acceleration at one frequency range. For shock there is indication that the measured acceleration for the mounting base of the MC-152 was of the order of one-fifth of the acceleration measured for the outside of the H-188 (measured close to the point of impact).

INVENTORIED

APR 1 1 '57

BY ORG 2243

Procedure and Results

Vibration - The conditions requested were 10-60-10 cps in 10 minutes with a double amplitude of 0.06 inch (10.8 g at 60 cps) in each of two mutually perpendicular axes (SCS-5, paragraph 2.1.4.3). These axes are shown in Figs. 1 and 2 and were obtained by strapping the container to the vibration table in the manner shown in Fig. 2. Displacement values (read through cathetometers) during vibration of the can were measured on the side of the can in axis II and on either end of the can in axis I.

INVENTORIED

Two crystal pickups were used in an effort to measure acceleration of the package unit. One pickup (Glennite accelerometer, Model A-302, Serial No. 108) was located on the outside skin of the MC-152 measuring acceleration in the direction of vibration. The second pickup (Glennite accelerometer Model A-403, Serial No. 476) was located on the mounting base of

SEP 1 4 1965

3428-3

MAR 1959

BY ORG. 4343

CENTRAL M & R
CONTROL NO. Q 40172

SANDIA SYSTEMATIC DECLASSIFICATION REVIEW
DOWNGRADING OR DECLASSIFICATION CHANGE
CLASSIFICATION CHANGED TO U
Carmela Galley 12/14/98
PERSON CHANGING MARKING & DATE
W C Layne 12/16/98
PERSON VERIFYING MARKING & DATE
RECORDED 99SN0349
DATED 11/4/98

THIS DOCUMENT CONSISTS OF 10 PAGE(S)

[redacted]

UNCLASSIFIED

the two baroswitches. It was positioned to measure acceleration in a direction perpendicular to the baroswitch mounting base. The location of these pickups and the direction of acceleration measurement are shown by small arrows above each pickup (Fig. 1). Cathetometer and pick-up readings were taken in 5-cps steps during the first vibration cycle.

Figures 3 and 4 graph the accelerations measured for the table, the outside of the can on the MC-152, and the baroswitch mounting bracket. From these figures, it is apparent that there was some movement of the can relative to the table; this (as shown in Fig. 3) allowed a maximum excitation received by the packaged item to be approximately 11-1/2 g (at 60 cps) instead of the prescribed 10.8 (at 60 cps). The highest acceleration measured for the packaged component was 4 g and was found for the pickup on the MC-152 nose assembly. In axis I this occurred at approximately 55 cps; in axis II this occurred at 45 cps. The lowest attenuation of the MC-152 occurred in axis II at approximately 30 cps; at this point the nose cone's acceleration was very close to the excitation acceleration. In Fig. 4 it will be noted that no readings were obtained for the pickup on the baroswitch mounting bracket. This is as expected, considering the direction in which the pickup was measuring.

Impact - The drop conditions requested are those outlined in SCS-5 paragraph 3.1.4.1. Specifically the tests were to include: 12 drops onto a cement floor from a height of 4 inches, and 6 drops from a height of 12 inches. The can was dropped from different positions so that for part of the drops the can would hit flat, and for the rest of the drops it would hit on edge as described below.

To monitor the shock, two Statham pickups were used. The 100-g pickup (Serial No. 1686) was mounted on the outside of the can approximately two inches from the bottom edge of the can and the 50-g pickup (Serial No. 1979) was mounted on the baroswitch mounting. The locations of these pickups are indicated in Fig. 1. The impulse from the two pick-ups was circuited through suitable amplifiers and recorded on a DuMont dual beam cathode-ray oscillograph (Serial No. 243, Type 279). The system was calibrated by dropping both pickups simultaneously on the 5-pound shock machine from the various heights which yield approximately 10, 20, 30, 40, 50, and 60 g. Photographs for each drop were taken and a calibration curve of g versus trace height (in 64ths of one inch) was computed.

Results obtained from the actual drop photographs are shown in Table I. The impact point refers to Fig. 2B which in turn shows the approximate point of impact on the bottom of the can. The acceleration from each

pickup refers to the measured magnitude (in g) of the first recorded peak on each photograph from each pickup following impact. This first recorded peak appears to be the first actual peak for the 50-g pickup; but for the 100-g pickup, there are cases (marked by numbers) where it is apparent from the photograph that the first actual peak was not necessarily recorded by the visible trace and hence does not appear on the photograph. This is a possibility with this particular scope as the trace upon being triggered must first retrace from the right end of the tube to the left of the tube before a visible trace will occur. Hence, if the shock wave occurs very soon after initial triggering, there is the chance that it would not be recorded by the particular scope used. For the 100-g pickup (externally mounted), this appeared to be the case in all but three of the 4-inch drops, and in all of the 12-inch drops. As there is an expected time delay between the initial triggering of the trace (accomplished with the 100-g pickup impulse) and the first shock wave from the internally mounted 50-g pickup, and since all the photographs of the 50-g trace show a consistant waveform starting from the zero reference line, it is believed that the first actual shock wave from the 50-g pickup is represented by the first wave on the photographs. Despite the above-mentioned difficulty, there is still good indication that the peak acceleration received by the MC-222 - MC-129 mounting assembly during the 4-inch drops was approximately 9-12 g, whereas the peak acceleration received by the can in the vicinity of the impact point was approximately 60 g. Hence, comparing the two we note an attenuation of the order of four-fifths.

The shock duration for the 50-g pickup was obtained from the photograph of the shock wave. The time was measured from consideration of the distance across the waveform at a height of one-fourth of the maximum peak when compared with a wave (double exposed on each photographed) of known frequency. No such computation was made for the 100-g pickup as the peaks were very sharp and close together (showing the resonance condition of the container following impact). The time-delay column shows values representing the time between the occurrence of the initial firing of the 100 g pickup, that is the approximate time of impact and the occurrence of the peak value of the 50-g pickup. Hence, it gives indication of the delay time for the shock wave in reaching the component following drop.

For the 12-inch drops, none of the initial shocks for the outside of the can were recorded in the photographs. Indication of approximately the same attenuation is there, but no more definite remarks could be made.

Figure 5 shows the deflections of the two MC-154 probes following vibration and shock tests. This figure is a copy of one supplied by the consultant.

Test Conducted by R. S. HOOPER - 1611

Approved by R. L. WAGAR - 1611

RSH:1611:tp

DISTRIBUTION:
1/9A - L. A. Dunn, 1284
2/9A - L. E. Lamkin, 1280
3/9A - T. B. Morse, 1610
4/9A - K. O. Thorp, 1630
5/9A - L. J. Biskner, 2530
6/9A - W. E. Caldes, 1513
7/9A - R. L. Wagar, 1611
8/9A - G. M. Byrne, 1922-2
9/9A - J. M. Ralls, 1521-4 Attn: 1500 Drawing File.

TABLE I

Drop Test Data for the H-188 Drop Test

Drop No.	Height (inches)	Impact Point	Acceleration (g) 50 g Pickup	Acceleration (g) 100 g* Pickup	Shock duration 50-g Pickup (3)	50-g Pickup Time delay (3)
1	4	flat	9	55(1)	7.5	6.6
2	11	flat	12	60(1)	7.5	6.6
3	11	flat	8	45(1)	8.7	7.5
4	11	1	11	60(2)	7.5	7.1
5	11	1	9	62(2)	7.5	6.3
6	11	1	9	60(2)	7.5	7.1
7	4	2	11	56(1)	7.5	7.5
8	4	2	12	57(1)	7.5	7.9
9	4	2	11	50(1)	7.5	7.5
10	4	3	9	41(1)	6.7	7.5
11	4	3	9	56(1)	7.5	7.5
12	4	3	10	46(1)	7.5	7.1
13	12	flat	No trace	No trace	No trace	No trace
14	12	flat	35		4.6	7.9
15	12	flat	22	70(1)	5.8	7.9
16	12	4	26	70(1)	5.4	7.1
17	12	4	26	70(1)	5.4	7.1
18	12	4	No trace	No trace	No trace	No trace
19	12	4	30	70(1)	5.0	7.1

* No time can be recorded because of high frequency and noise.

1. Does not necessarily represent first actual shock peak.
2. Does represent first actual shock peak.
3. All times are measured in milliseconds.

[redacted]

UNCLASSIFIED

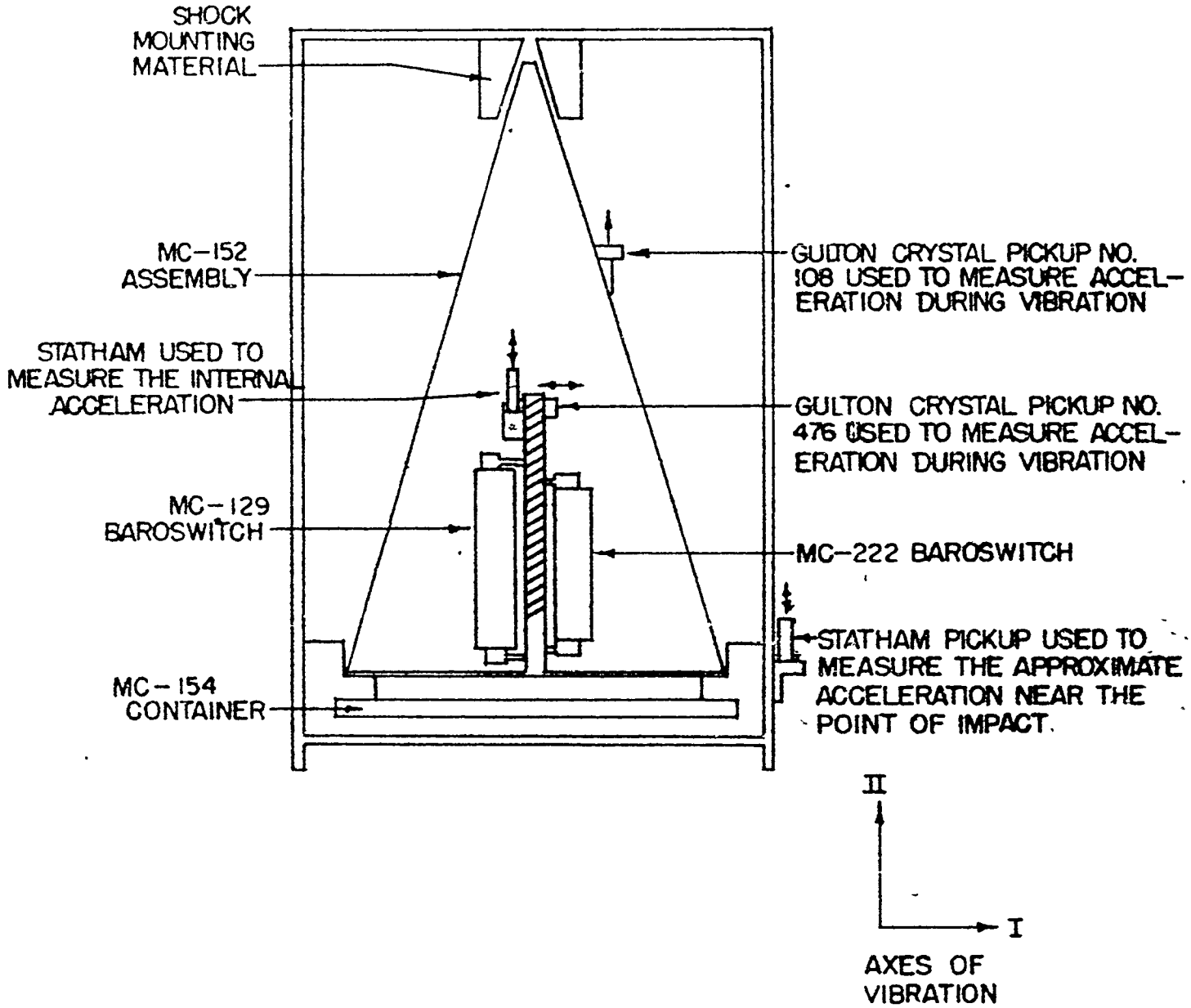

UNCLASSIFIED

FIG. 1 - RELATIVE POSITIONS OF THE PACKAGED ITEMS OF THE H-188 CONTAINER (NOT DRAWN TO SCALE)

ET-1698
REF SYM-1611(27)
2-11-54 JEM

[redacted]

[redacted]

UNCLASSIFIED

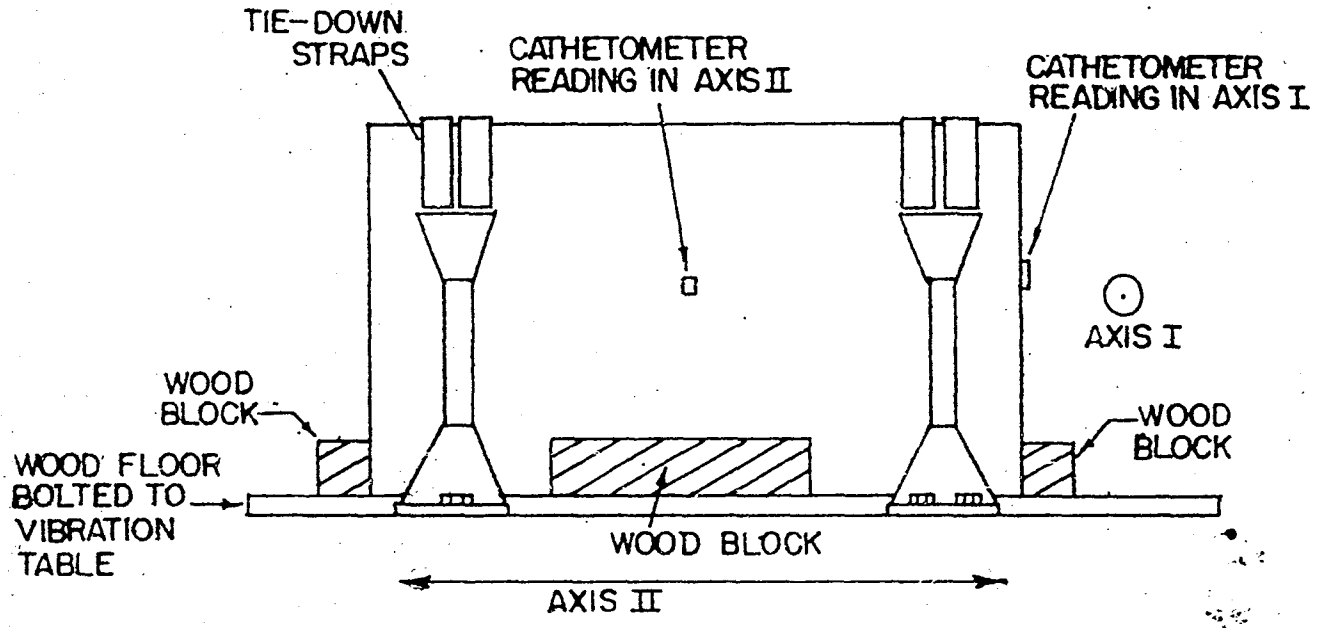

FIG 2 a – THE H-188 CONTAINER (NOT DRAWN TO SCALE) MOUNTED FOR LOW FREQUENCY VIBRATION

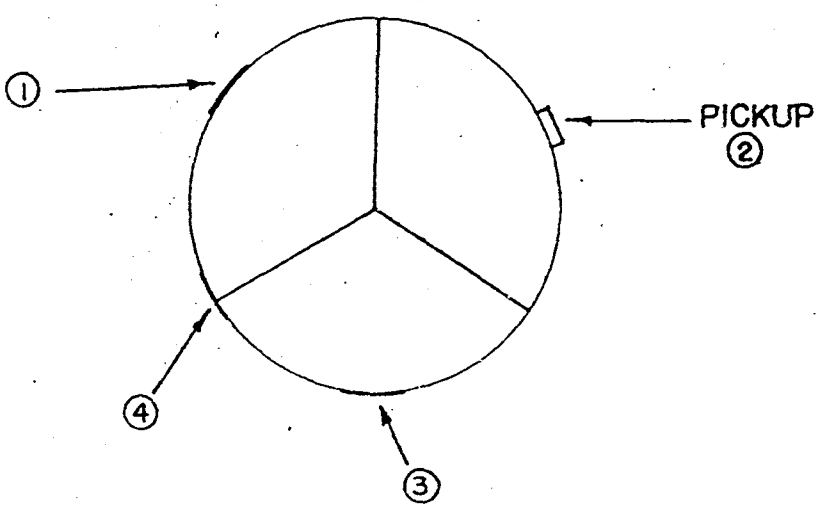

FIG. 2b – POINTS OF IMPACT ON THE BOTTOM SURFACE OF THE H-188 CONTAINER

UNCLASSIFIED [redacted]

ET-1698
REF SYM-1611(217
2-12-54 JFM

KEUFFEL & ESSER CO.

UNCLASSIFIED

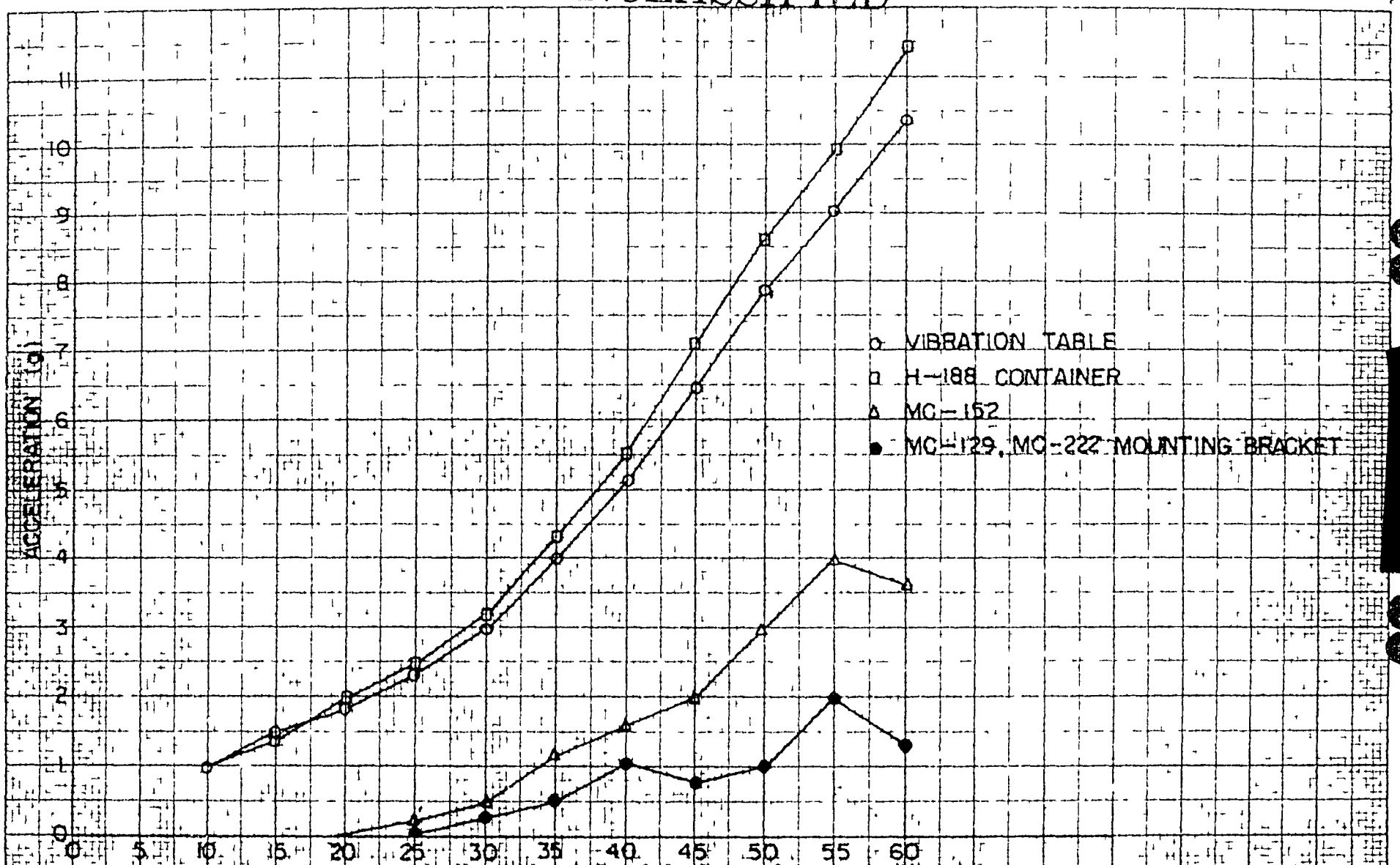

FIG 3—ACCELERATION VS FREQUENCY FOR THE H-188 CONTAINER IN AXIS 1

ET-1698
REF SYM-1611(217)
2-12-54 JFM

UNCLASSIFIED

359-11 KEUFFEL & ESSER CO.
10 to the ½ inch, 5th lines accented.
MADE IN U.S.A.

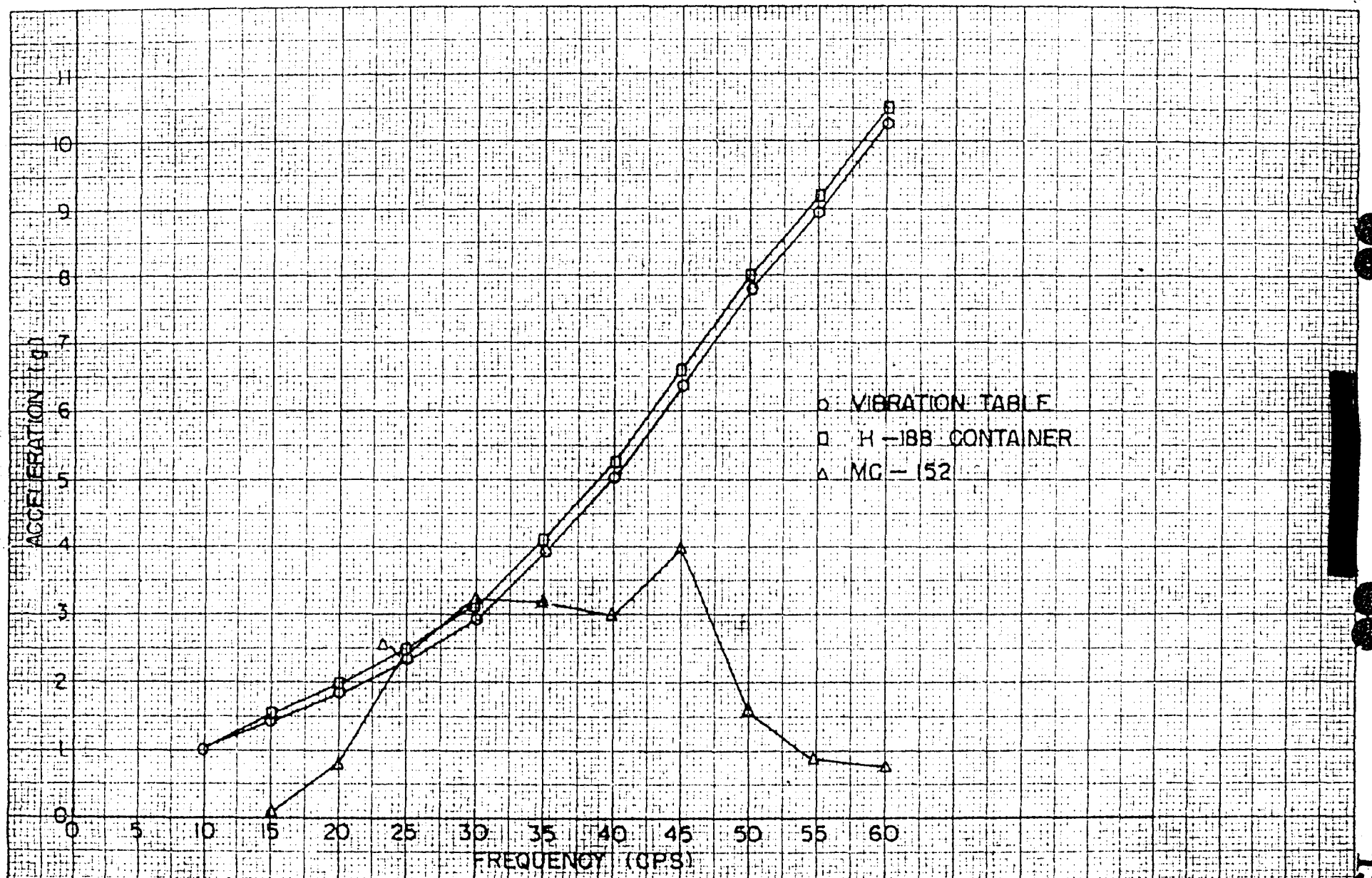

FIG. 4 — ACCELERATION VS FREQUENCY FOR THE H-188 CONTAINER IN AXIS II

ET - 1698
REF SYM-1611(217)
2-12-54 JFM

[redacted]

UNCLASSIFIED

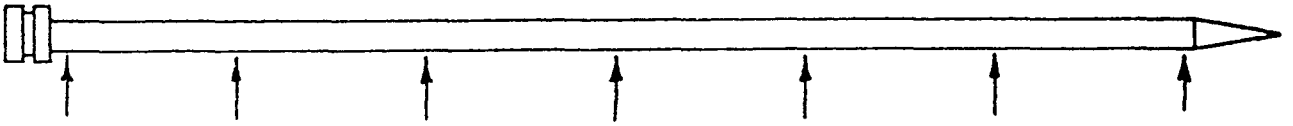

Initial	0.000	0.0002	0.0011	0.0015	0.0011	0.0005	0.0000
After vibration	0.0000	0.0009	0.0018	0.002	0.0015	0.0007	0.0000
After drop	0.0000	0.0004	0.0013	0.0015	0.0014	0.0007	0.0000
Maximum change	0.0000	+0.0007	+0.0007	+0.0005	+0.0004	+0.0002	0.0000

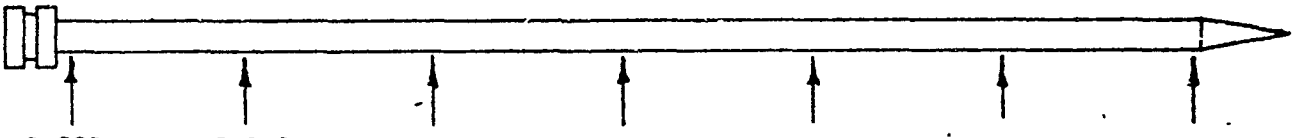

Initial	0.0002	0.0003	0.0007	0.0007	0.0005	0.0003	0.0001
After vibration	0.0000	0.0004	0.0006	0.0007	0.0004	0.0003	0.0000
After drop	0.0000	0.0008	0.0012	0.0013	0.0011	0.0005	0.0000
Maximum change	-0.0002	+0.0005	+0.0005	+0.0006	+0.0006	+0.0002	-0.0001

NOTE: 1. All figures are total indicator readings
2. Spacing of readings is 2 inches
3. Probe Dwg allows a T.I.R. of 0.004 inch

FIG. 5 – PROBE DEFLECTION FOLLOWING VIBRATION AND IMPACT TESTS

ET-1698
Ref. Sym-1611 (21

[redacted]

UNCLASSIFIED