JUN 28 1955

717356

ORNL
MASTER COPY

ORNL-6728
ORNL-341/DELETED

AN AERIAL SURVEY OF RADIOACTIVITY

[redacted]

(This is a sanitized version of Secret Document ORNL-341.)

BY

F.J. Davis
P.A. Humphrey
Lt. W.E. Harlan
Lt. R.L. Kane
P.W. Reinhardt

REPOSITORY MMES/X-10/Vault
COLLECTION Central Files
BOX No. ORNL-6728
FOLDER

OAK RIDGE NATIONAL LABORATORY

OPERATED BY
CARBIDE AND CARBON CHEMICALS CORPORATION
FOR THE
ATOMIC ENERGY COMMISSION
POST OFFICE BOX P
OAK RIDGE, TENNESSEE

September 2, 1992

ORNL-6728
ORNL-341/DELETED

OAK RIDGE NATIONAL LABORATORY

OAK RIDGE, TENNESSEE

AN AERIAL SURVEY OF RADIOACTIVITY ASSOCIATED WITH ATOMIC ENERGY PLANTS

(This is a sanitized version of Secret Document ORNL-341.)

by

F.J. Davis
Lt. W.E. Harlan
P.A. Humphrey
Lt. R.L. Kane
P.W. Reinhardt

13 April 1949

1119922

ORNL

Distribution

1-11. Lt. W. E. Harlan, 1009 Special Weapons Squad Headquarters, Dept. of the Air Forces, Washington, D. C.

12-13. Central Files

1119923

INDEX

	Page
Abstract	7
Preface	8
Introduction Project	11
Sources of Radioactivity for Project Purposes	14

Part I

Comparison of Nuclear Instruments

Introduction	19
A. Description of the Instruments	19
1. Atmospheric Conductivity Apparatus	21
2. NRL Dual Channel Radiation Detection Unit	41
3. High Pressure Ion Chamber	46
4. Alpha Amplifier with Atomic Scaler	49
5. El-tronics Scaler	54
6. Filter Box Installation	55
B. Type of Radiation Measured	59
C. Calibration	62
D. Background	65
E. Altitude Effect	67
F. Zero Drift	70
G. Time Constant	70
H. Ruggedness and Reliability	71
I. Simplicity	72

1119924

INDEX (Continued)

	Page
J. Filter Collection	73
K. Recommendations	76
L. Filter Efficiency	78

Part II

Meteorological Influence

on

Airborne Radioactive Contamination

I. Introduction	88
II. First Phase: Preliminary Flights at Oak Ridge	
A. Meteorological Requirements	92
B. Meteorological Planning	93
C. Actual Flight Operation	94
D. Results	95
E. Analysis and Documentation	95
III. Second Phase: Major Effort at Oak Ridge	
A. Types of Flights Made	96
B. Geographic Features of Area	99
C. Meteorological Characteristics of Area During Operation	103

1119925

INDEX (Continued)

		Page
	D. Meteorological Facilities Available	107
	E. Problems of Actual Flight Operations	112
	F. Description of Typical Flight at Oak Ridge	117
IV. Third Phase:	The Effort at Hanford	
	A. Types of Flights Made	134
	B. Geographic Features of Area	134
	C. Meteorological Characteristics of Area During Operation	137
	D. Meteorological Facilities Available	139
	E. Description of Flight Planning Procedure	139
	F. The Problems of Actual Flight Operation	140
	G. Typical Flight at Hanford	142
Conclusions		149
Recommendations		151
Appendix		
	Notes of Historical Interest	154
	Chronology of Project Flights	156
	The Project Aircraft	158
	A Typical Operational Flight Log	164

1119926

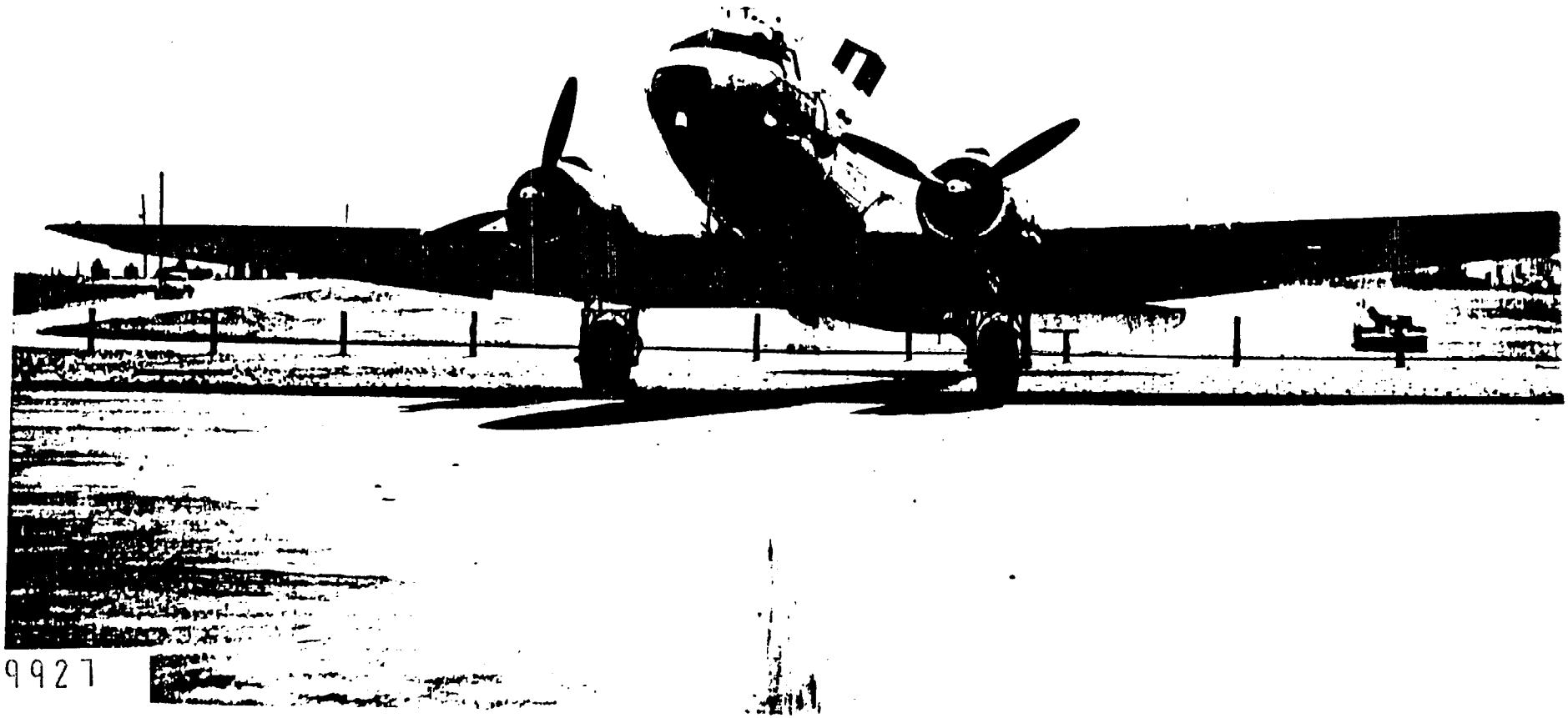

1119927

ABSTRACT

The project covered by this report

as an endeavor to (1) compare a group of laboratory instruments as airborne detectors of radioactivity and (2) simultaneously obtain data relative to the diffusion rate of radioactive contamination emitted into the atmosphere from off-gas stacks of production runs. Research was conducted in the Oak Ridge, Tennessee and Hanford, Washington areas. Detection was accomplished at a maximum distance of seventeen miles from the plant. Very little information of a conclusive nature was gained concerning the diffusion. Further research with the nuclear instruments, using a stronger source, is recommended. To obtain conclusive information concerning the meteorological aspects of the project, a larger observational program will be needed.

1119928

Preface

While many instruments have been developed for the detection of radioactivity, some of these having been used in airborne detection, there has been little, if any, comparison made between any two operating simultaneously under the same conditions in an airborne operation. It was for this purpose that the Special Weapons Group of Air Force Headquarters proposed Special Project PF/34.

Dr. Francis J. Davis and Ralph H. Firminhac of the Health Physics Division, Oak Ridge National Laboratory, to take charge of the technical aspects of comparing a group of these nuclear instruments under various flight and meteorological conditions. Mr. Firminhac left the Laboratory to assume a position with the Institute of Nuclear Studies and his place was filled by Paul W. Reinhardt.

It was under Dr. Davis's direction, assisted by Paul W. Reinhardt, also of the Health Physics Division, that the project aircraft was outfitted with these instruments by members of the Air Materiel Command at Wright-Patterson AFB. The flight crew was furnished by the 308th Reconnaissance Group (Wea) VLR Fairfield

1119929

Suisun AFB, and on 10 November 1948 the completed aircraft, with Dr. Davis and the crew aboard, left Washington, D.C. for a five months period of instrument comparison and meteorological analysis of flow patterns of radioactive gases leaving off-gas stacks of nuclear production plants.

During the process of the project it was determined that the meteorological aspect should be expanded. It was for this reason that Dr. Harry Wexler, Chief of Scientific Services Division, U.S. Weather Bureau, was asked to take the responsibility Paul A Humphrey, as his representative, arrived in Knoxville, to assist in the work.

Two areas were used as sources of radioactivity. The first phase of the project was conducted at Oak Ridge, Tennessee, and the second in the vicinity of Hanford Works, Richland, Washington.

This report presents the findings of these studies and is divided into two main sections: (1) The comparison of the nuclear instruments and (2) the meteorological influence on airborne radioactive contaminates.

1119929 A

Aknowledgements

The success of this project was due largely to the continual interest and cooperation of personnel at the Oak Ridge National Laboratory. To the Health Physics Division, under Dr. Karl Z. Morgan, we are especially grateful for the use of research and laboratory facilities.

Mr. Vincent R. Holmquist, Chief, Office of Safety, Hanford Works, and his staff cooperated in establishing that phase of the project.

Personnel of the Knoxville Airport, at Oak Ridge, and at the Hanford Works, contributed meteorological data which aided in project flight planning and analysis.

1119930

INTRODUCTION

By way of introduction to the project, these few historical highlights are given and should be of particular interest to the reader who is not familiar with the operational sites and techniques used.

Two sites were available as adequate sources of airborne radioactivity, for project requirements. The choice was between Oak Ridge, Tennessee, and Hanford Works, Washington. Oak Ridge was chosen for the first flights because the consulting physicist, Dr. Davis, was employed by the Health Physics Division there and the facilities of his laboratory would be available for maintenance of equipment and further research. Located in what is known as the X-10 area, this laboratory is only a few hundred yards from the pile and chemical separation buildings and close liasion with both operations is possible.

Three of the most sensitive of the laboratory instruments, taken from the Health Physics laboratory, were chosen for the comparison tests. High sensitivity was essential because it was desired to measure even the slightest background fluctuation and not to be content with measurement of high intensities of radiation.

1119931

As a carrier for these instruments, the aircraft was adequately equipped for in-flight maintenance on all instruments.

The project began with a flight from the Knoxville, Tennessee airport on 17 November 1948. This first flight was conducted outside of the Oak Ridge restricted area as were the next two, prior to receipt of permission to enter this area. The first few flights made with only the idea in mind to determine the preformance of each instrument in flight and to make any changes required for further comparison. As the flights progressed, more effort was made to analyze the data recorded by the instruments with respect to the position and altitude of the aircraft and the existing meteorological conditions.

The topographical features were a hinderance to the Oak Ridge phase in limiting the lowest altitude for safe flight to a higher elevation than sometimes desired on cross-ridge passes. The influence of these ridges on the meteorological state of the area is covered fully in this report, as is every meteorological aspect of the project.

Many passes over the X-10 area, to measure the intensity of radioactive contamination, resulted in a rather

1119931 A

routine process of tracking such media. It was decided that this technique should be applied to the Hanford area in an endeavor to determine the degree of contamination at a plutonium production plant.

So, on 16 February, the operation was moved to Richland for further work.

Flights were started, and as the plane moved in on the plants, the records showed only negligible return until very low passes were made over the stacks concerned. So well filtered were the gases of the plant operations, that detection was possible less than two miles from the plants even when separate plants were dissolving at the same time.

Only three flights were conducted in the Hanford area, and the lack of radioactive material to work with resulted in the abandonment of this phase. Consequently, most of the data recorded in this report will be of necessity from the Oak Ridge phase of the project.

1119932

SOURCES OF RADIOACTIVITY FOR PROJECT PURPOSES

OAK RIDGE

During project operations at Oak Ridge, two sources of radioactivity in gaseous form and one of particulate matter were available.

Most readily available as a source, was the pile which was shut down only for a few hours occasionally. This pile is air-cooled by two Buffalo Forge special fans with an air-flow of about 90,000 cu ft per min. After blowing through the pile, this air is jetted into the atmosphere through a 200 ft. stack. Contamination carried into the atmosphere in this manner is mostly $Argon^{41}$ with a strength of 500 curies per day. The cooling air is processed through a cyclone separator to remove any large particulate matter that it may have picked up on its passage through the pile, and then through a filter house containing 1" FG-50 filter media and CWS #6 filter paper.

Another source of radioactive contamination in the Oak Ridge vicinity is the dissolving step of the Chemical Separation process. Here, irradiated slugs from the pile are dissolved in a HNO_3 solution. Activity produced reaches a maximum about one

1119933

hour after the dissolving begins, decreases to one-third during the second hour, and diminishes to zero at the end of approximately eight hours.

150 lbs. of slugs aged for 5 days after extraction from the pile, are dissolved in each operation. The following radioactive gases are released in the indicated quantity for each operation:

Xenon^{133} ..... 2500 curies

Iodine^{131} ..... 1300 curies

Krypton^{85} ..... Less than one curie

An effort is made to remove the Iodine^{131} with scrubbers and filters before the off-gases are released to the stack. The efficiency of this filtering is not known, but the activity from Iodine leaving the stack is much less than the 1300 curies originally released.

An additional source of radioactive particles at Oak Ridge is in Evaporation stage of the Chemical Separation. This process has an incorporated filter system but some particulate matter escapes in an undetermined manner.

1119933A

HANFORD

Only one type of source was available at Hanford Works. This was the Chemical Separation process, taking place in two separate plants at very frequent intervals. Dissolving sometimes occurs simultaneously in both plants as was the case on one of the days of project operation. Even though the number of slugs being dissolved is much greater than at Oak Ridge, they have been aged for a longer period and hence give the lower output of Xenon and Iodine as shown by the following chart:

For one Dissolving process, duration six to eight hours these gases were emitted:

$Xenon^{133}$	0.3 curies
$Iodine^{131}$	10 to 20 curies
$Krypton^{85}$	90 curies

Here again an effort is made to remove the Iodine from the off-gases with a sand trap filter.

The Hanford piles offer no source for detection purposes with methods used on this project. They are water-cooled and the water is returned to the Columbia River where it is diluted to a strength of about 2% of its contamination acquired in passing through the pile.

1119934

As a comparison between the two plants, the following summary is offered:

	Oak Ridge	Hanford
Pile out-put	500 curies/day Mostly Argon^{41}	None
Dissolver out-put for	5 day slugs	100 day slugs
Xenon^{133}	2500 curies/per operation	0.3 curies per operation
Iodine^{131}	1300 curies/ per operation	10 to 20 curies/ per operation
Krypton^{85}	less than 1 curie per operation	90 curies per operation

1119934 A

Element	Half Life $T_{\frac{1}{2}}$	Beta Energy MEV	Gamma Energy MEV
$Argon^{41}$	110 min.	1.2	1.3
$Xenon^{133}$	5.3 days	.3	.085
$Krypton^{85}$	9.4 years	.8	———
$Iodine^{131}$	8.0 days	.6	.37
			.08
			.65 (15%)

1119935

Comparison of Nuclear Instruments

Introduction:

An ideal airborne instrument for the detection of radioactive gases given off from piles and dissolving processes should detect alpha, beta, and gamma radiation, have high sensitivity, and a short time constant. It should also be fairly insensitive to altitude changes, maintain a reliable calibration, and be simple to operate.

Since it is not practical to incorporate all of these features into one instrument, simultaneous measurements from several instruments must be used.

In this section will be found descriptions of the instruments compared, methods of comparison and calibration, the conclusions reached, and recommendations for future use of these instruments.

Description of the Instruments:

Three instruments were chosen for the comparison tests: An atmospheric conductivity chamber, a high pressure ionization chamber, and the NRL Dual-Channel Airborne Radiation Detection unit. The use of these instruments is not new. One of the earliest atmospheric conductivity measuring device was devised by Elster and Geitel

1119935A

in Germany during the early part of this century. Later developments have brought about the design of an instrument such as was used on the project. Ionization chambers date back to 1896, when Becquerel observed that a charged electroscope would be discharged if uranium was brought near its terminal. Coincidence counting similar to that used in the N.R.L. unit was first devised by Rossi in the late 1920's.

Supplementary instruments on the aircraft include an Eltronics scaler, and an alpha counter consisting of a high-gain amplifier fed into an Atomic Instrument Company scaler. All of these instruments are of proven design and have been used very successfully in ground operation. Their behavior in flight is covered in this section following a brief description of each instrument.

1119936

in Germany during the early part of this century. Later developments have brought about the design of an instrument such as was used on the project. Ionization chambers date back to 1896, when Becquerel observed that a charged electroscope would be discharged if uranium was brought near its terminal. Coincidence counting similar to that used in the N.R.L. unit was first devised by Rossi in the late 1920's.

Supplementary instruments on the aircraft include an Eltronics scaler, and an alpha counter consisting of a high-gain amplifier fed into an Atomic Instrument Company scaler. All of these instruments are of proven design and have been used very successfully in ground operation. Their behavior in flight is covered in this section following a brief description of each instrument.

1119937

Atmospheric Conductivity Apparatus

Air, in its normal state, is one of the best insulators known. However, the action of cosmic rays and radioactive matter on the air produce electrically charged particles, called ions, which render the air conductive to a more or less degree. The Air Conductivity apparatus is used to measure ionization currents in the air due to ionization agents.

The schematic on Page 22 represents the instrument used on this project to measure this conductivity. At the upper left is a cylindrical condenser, consisting of an outside tubular shell which is at a potential of $\neq$ 300 volts and an inner memember which has been highly insulated. This inner member is connected to a sensitive electrometer tube in a balanced bridge circuit. This bridge circuit is in turn connected to a Brown recorder. When air is passed through the chamber, the ions present in the air are brought under the influence of the electrical field between the members of the cylindrical condenser and are collected on these members, the positive ions being attracted to the outer shell. This causes a voltage to appear across the high-value resistor R_2 and a corresponding change in the grid voltage of the electrometer tube. The bridge is thrown out of balance.

The D.C. voltage produced by the unbalanced bridge is converted into an alternating voltage by the conversion stage of the Brown recorder and is amplified to a large value by the voltage amplifier.

1119938

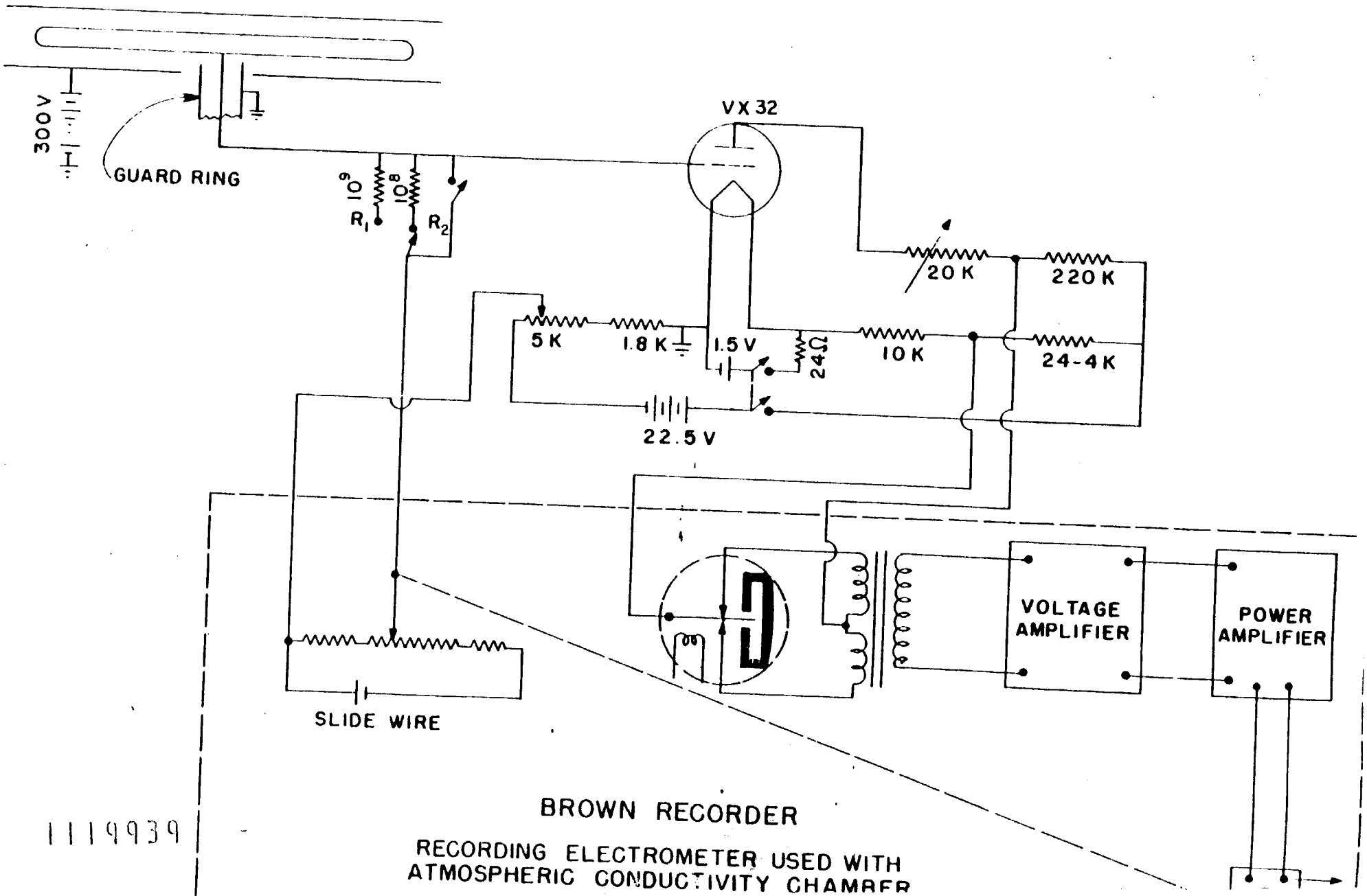

BROWN RECORDER

RECORDING ELECTROMETER USED WITH ATMOSPHERIC CONDUCTIVITY CHAMBER

1119939

It is then used to control the output of a power amplifier which drives a balancing motor. This motor is connected mechanically to a slide-wire potentiometer which is connected in series with R_2, and presents a bucking voltage to bring the bridge back to a balanced state.

The bucking voltage is recorded on the strip chart of the Brown recorder and is equal to the voltage drop across R_2, which is directly proportional to the ionization current. The ionization current is a measure ofthe amount of ionization matter in the air.

The project Conductivity apparatus was constructed in the instument shop of the Health Physics Division from specifications supplied by Dr. Davis and P. Reinhardt. These specifications were based on the results of experiments performed by G.R. Nait.[1] Because of the scarcity of published imformation on an instrument of this type, a complete set of working drawings of the cylindrical condenser are included in this report, beginning on Page 26

Page 24 shows the installation of the apparatus in the aircraft. The associated Brown recorder is at the far left behind the tube. The electrometer tube and bridge circuit are enclosed in a small box mounted on the outer shell at the upper center of the picture, while the course and fine zero adjust controls and the off-on switch are in the case below. Air flows through the tube after entering the scoop

1119941

on top of the aircraft, shown with the Filter Box on Page 55. The air then leaves the other end of the tube through the hole in the cabin wall in which it is fastened. The straight part of the outer shell is 54" in length and 3" in diameter while the inner insulated member is 45" long and 3/4" in diameter. Fluorothene insulators separate the two.

[1] Some Experiments Relating to the Electrical Conductivity of the Lower Atmosphere -G.R. Wait, Department of Terrestial Magnetism, Carnegie Institute of Washington

1119942

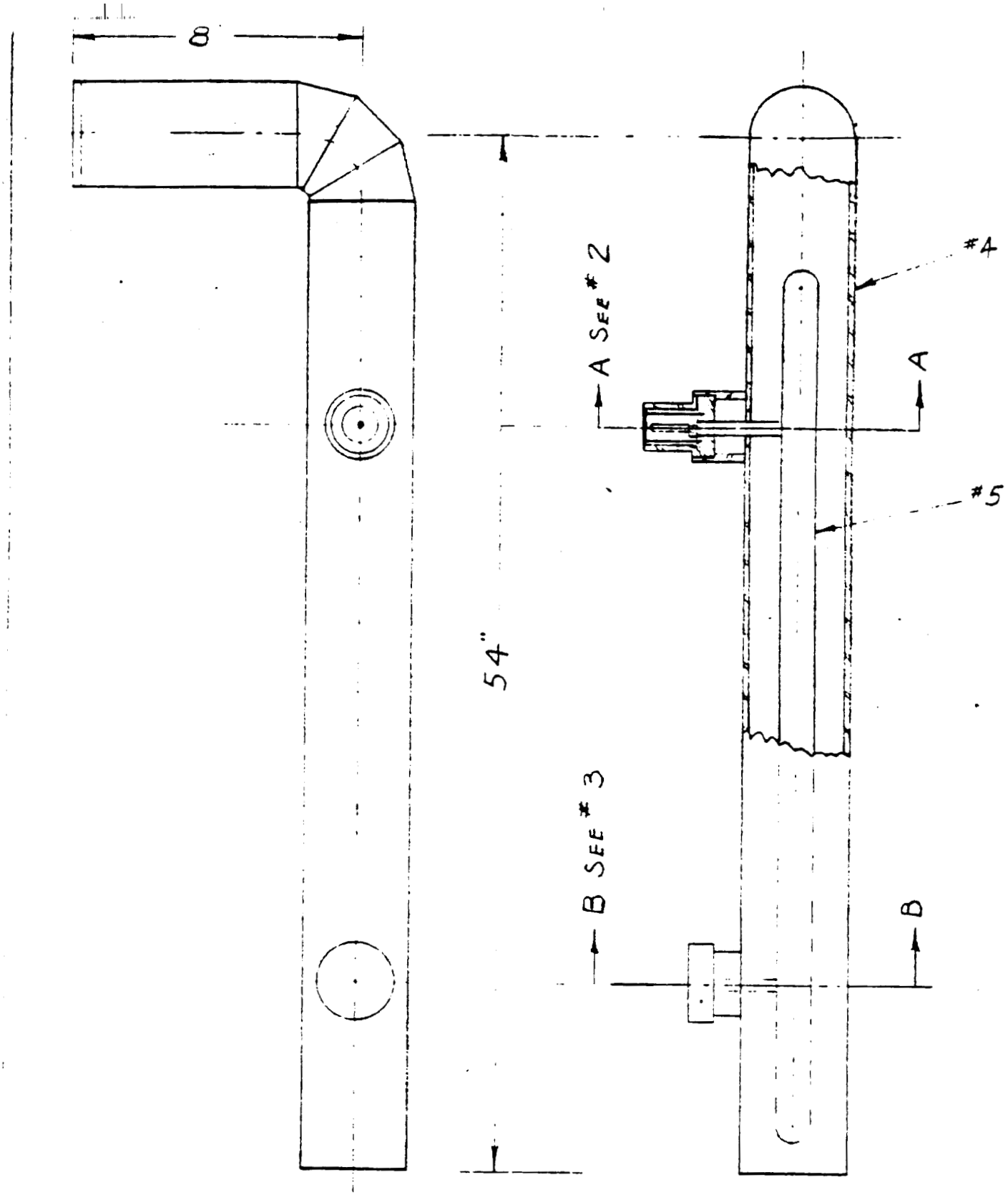

CONDUCTIVITY CHAMBER
NO SCALE

HEALTH PHYSICS
OAK RIDGE NATIONAL LABORATORY

DETAILS #2 THRU 9

NO. 1

NOT COPYRIGHTED

E4bb111

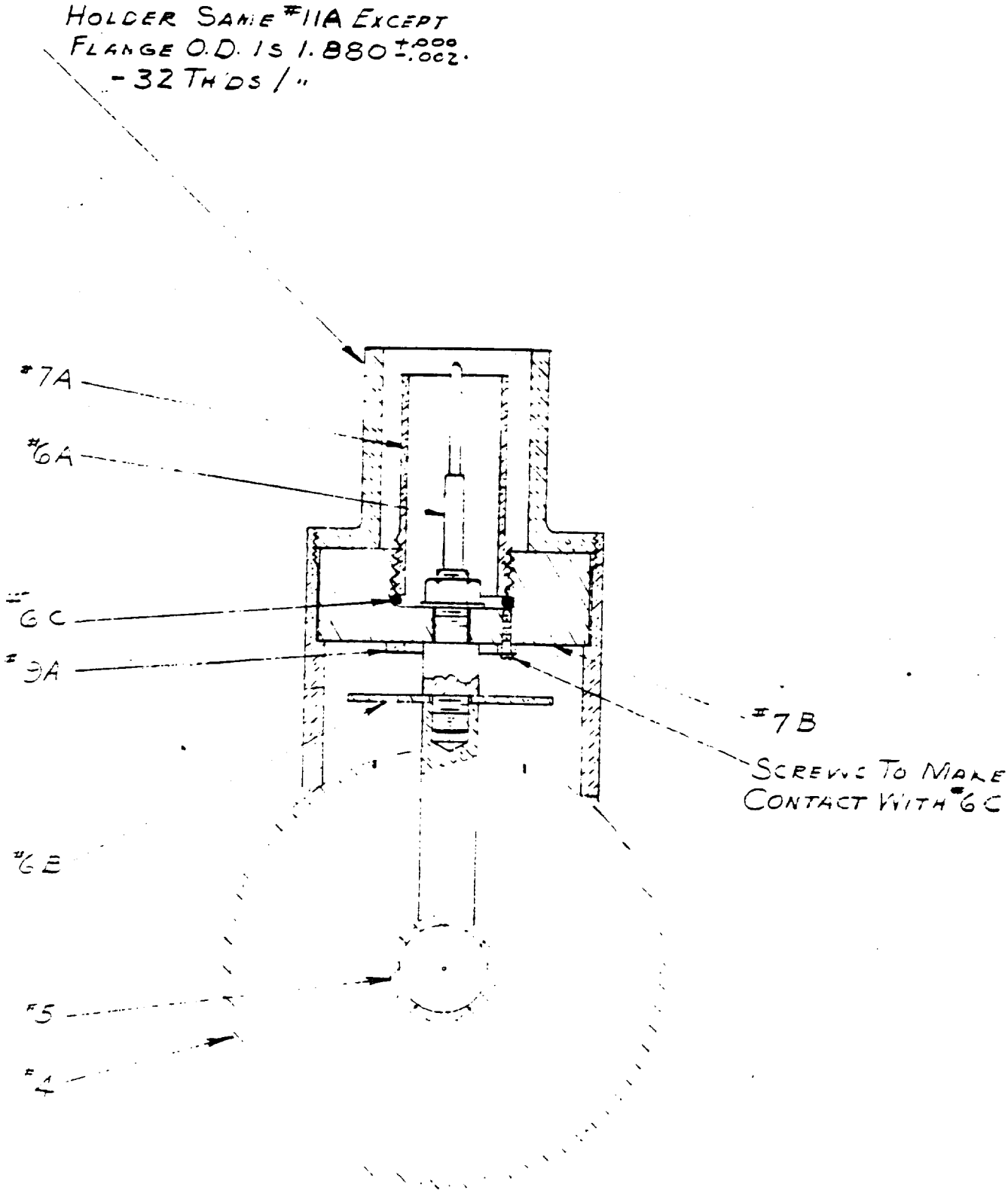

SECTION A-A
CONDUCTIVITY CHAMBER
SCALE 1"=1"

HEALTH PHYSICS
OAK RIDGE NATIONAL LABORATORY

ASSEMBLY #1

No. 2

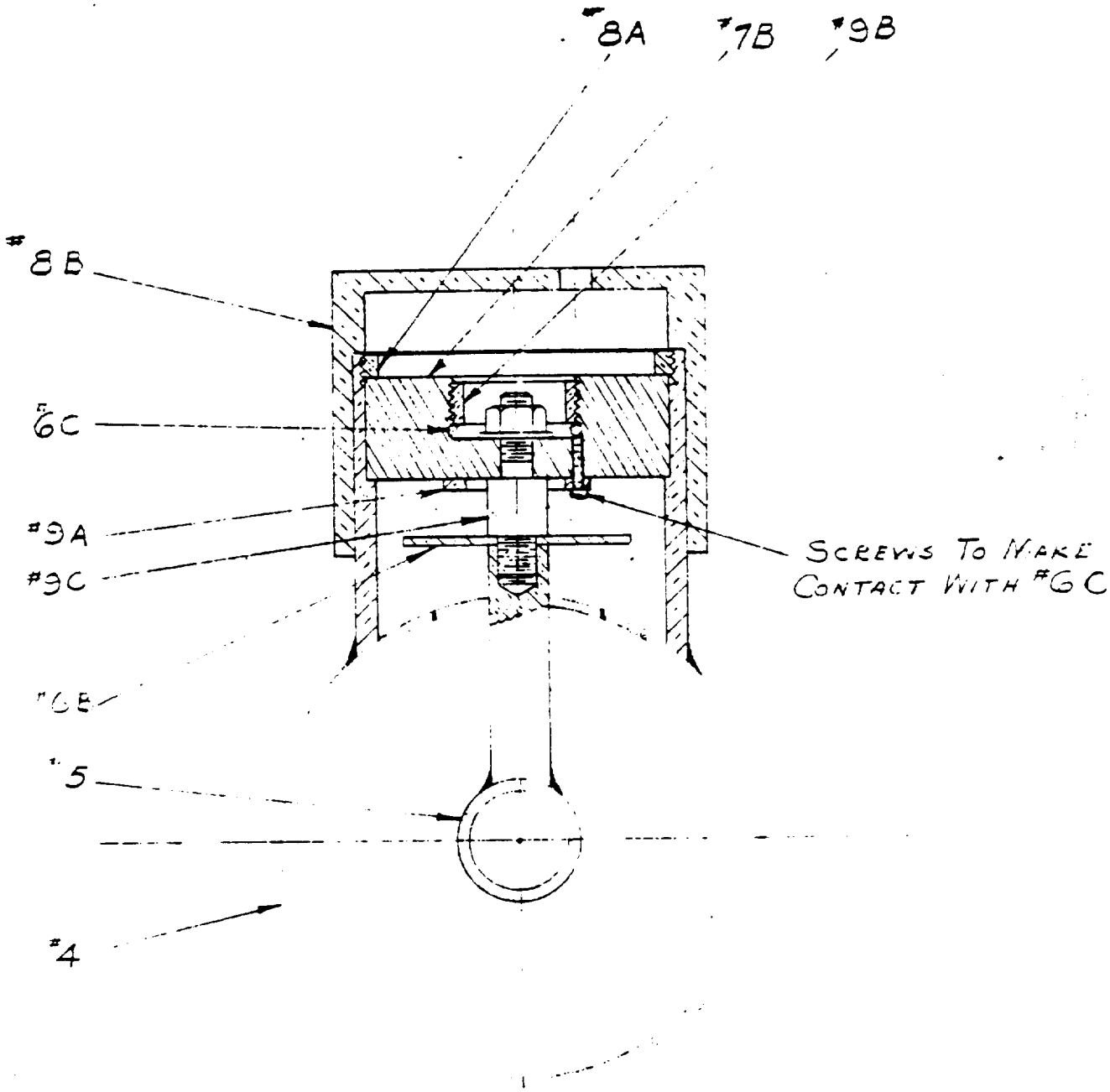

SECTION B-B
CONDUCTIVITY CHAMBER
SCALE 1"=1"

HEALTH PHYSICS
OAK RIDGE NATIONAL LABORATORY

ASSEMBLY #1

NO. 3

11994 5

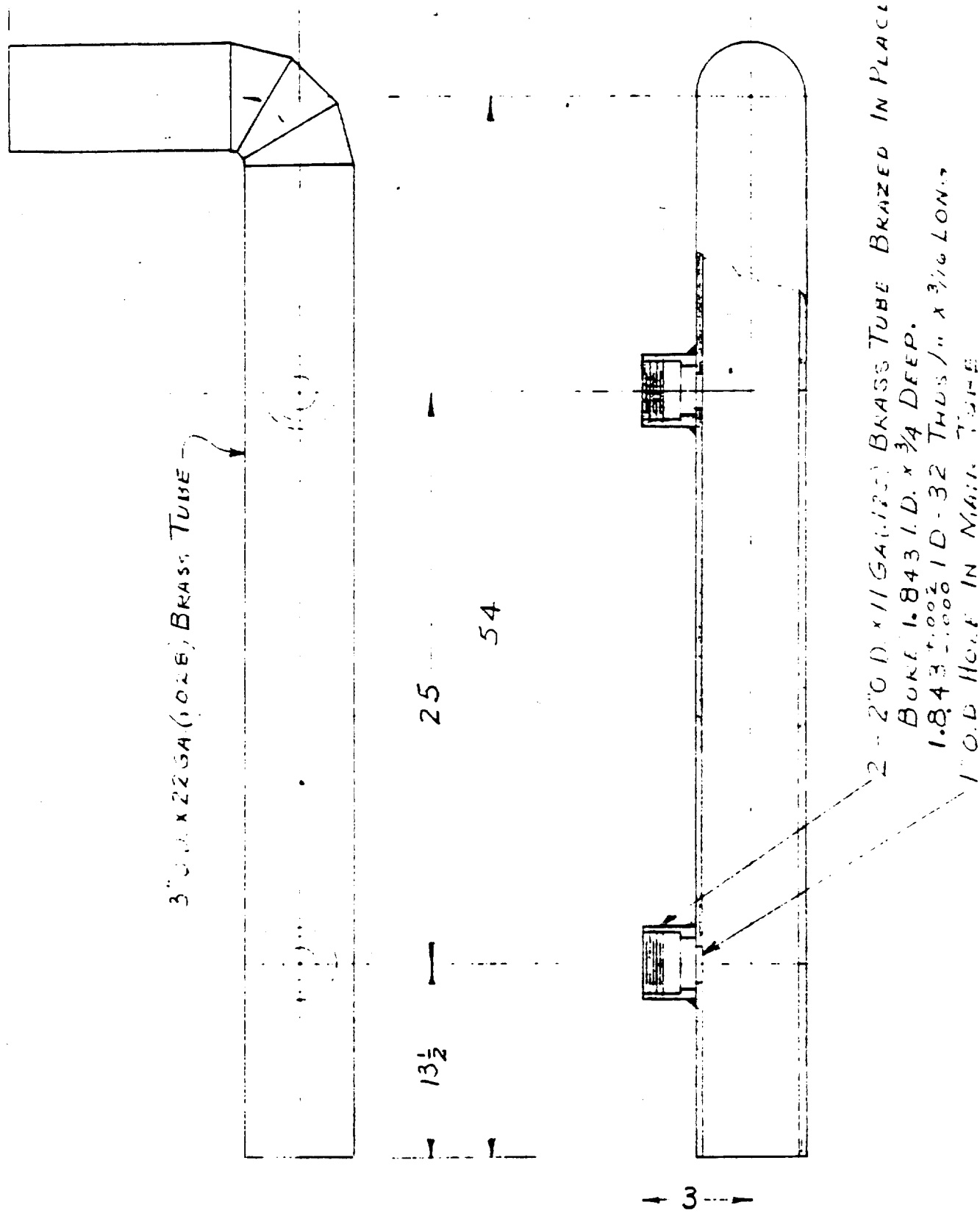

CONDUCTIVITY CHAMBER BODY
MATL. - BRASS
NO SCALE

HEALTH PHYSICS
OAK RIDGE NATIONAL LABORATORY

ACCESSORY #1

NO. 4

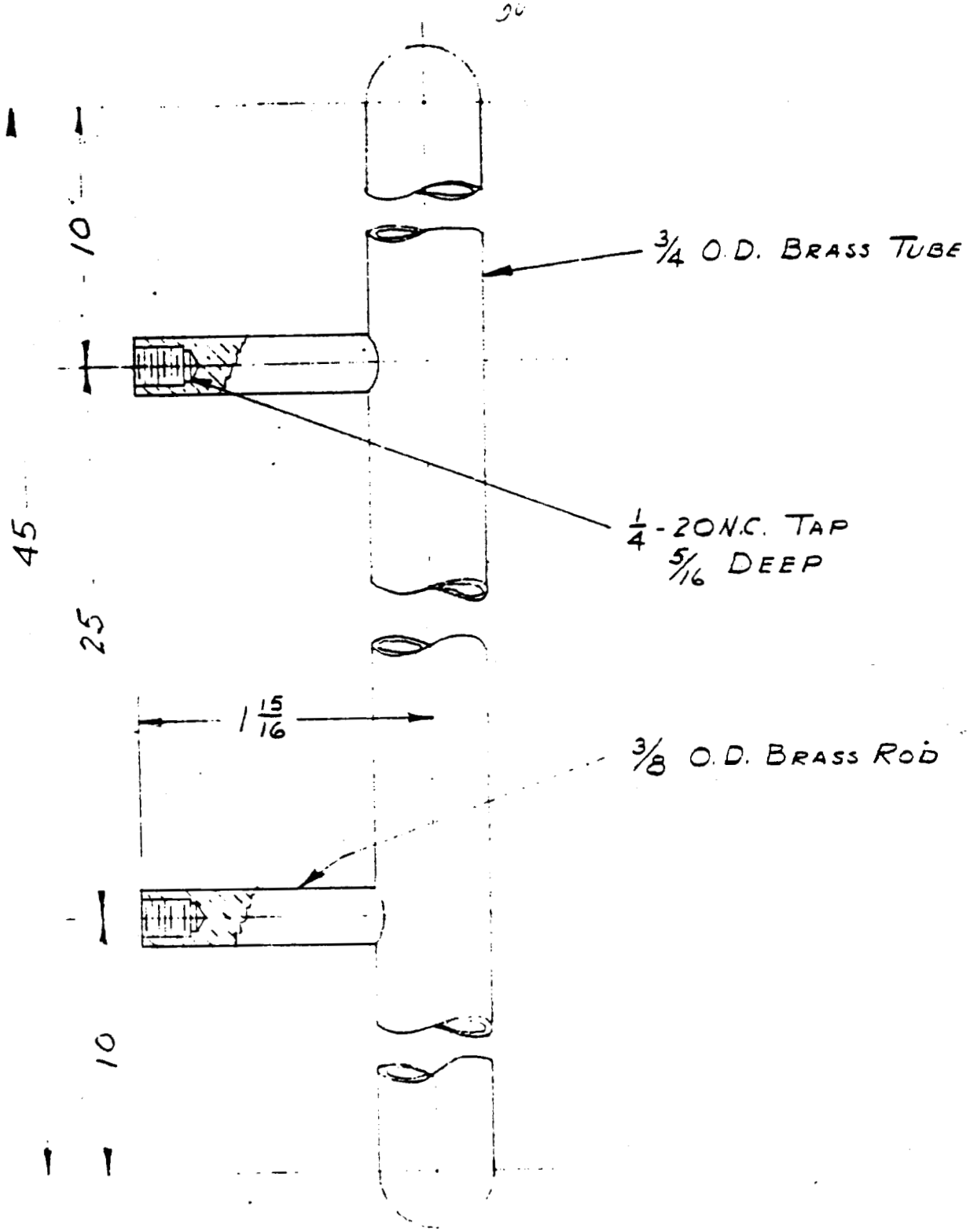

ELECTRODE
MAT'L - BRASS
SCALE 1"-1" 1 REQ'D

HEALTH PHYSICS
OAK RIDGE NATIONAL LABORATOR

ASSEMBLY #1 NO. 5

NOT CLASSIFIED

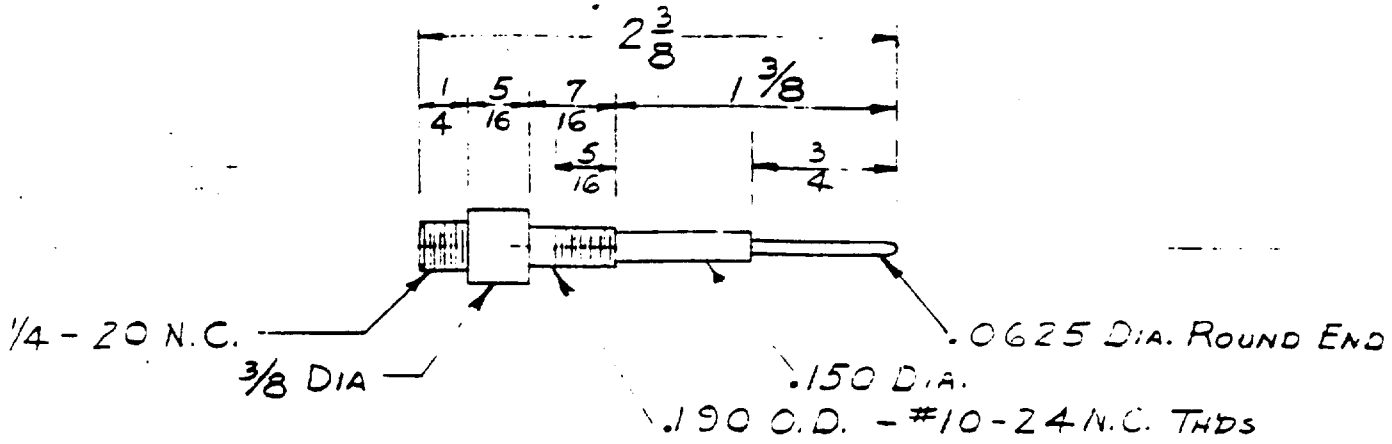

#6A CONNECTOR POST
MAT'L - HARD BRASS (NAVAL)
SCALE 1" = 1" 1 REQ'D

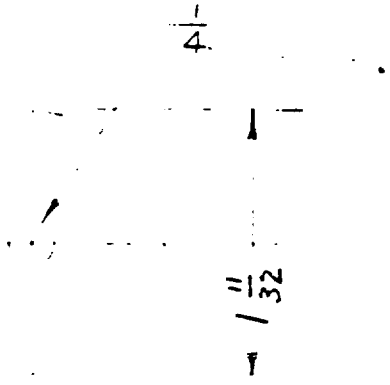

1/32 THICK

#6B SHIELD
MAT'L - HARD BRASS (NAVAL)
SCALE 1" = 1" 2 REQ'D

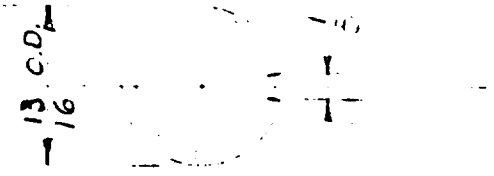

1/16 DIA. WIRE

#6C SNAP RING
MAT'L - BRASS
SCALE 1" = 1" 2 REQ'D

HEALTH PHYSICS
OAK RIDGE NATIONAL LABORATORY

#2 & #3 NO. 6

8466

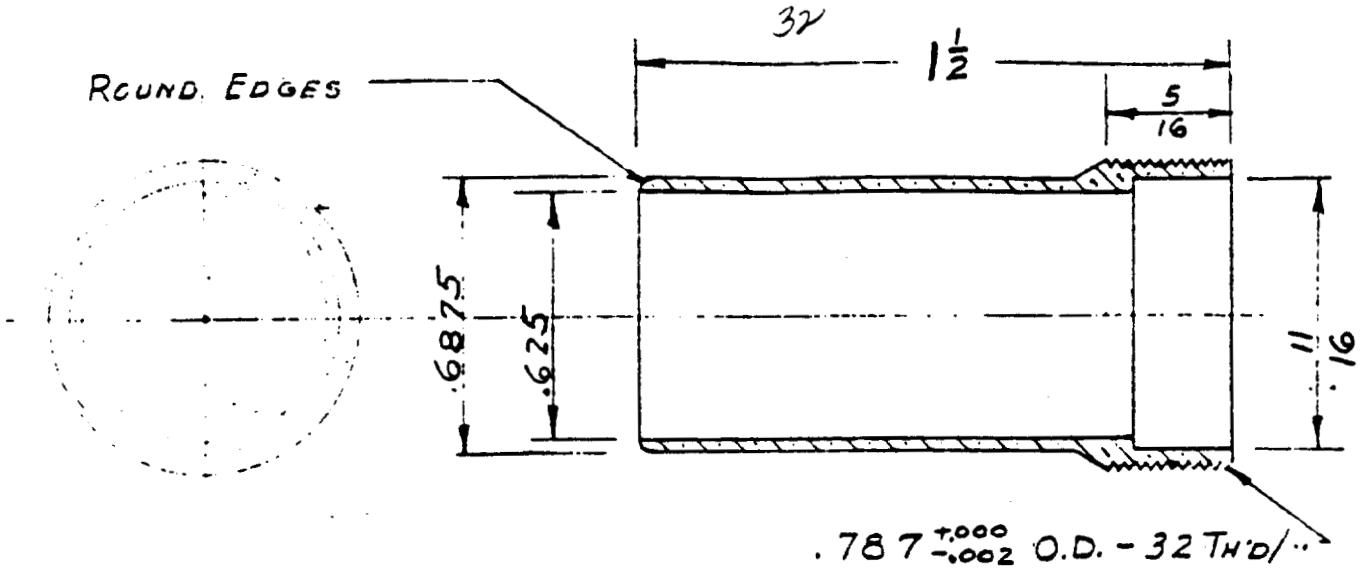

#7A GUARD
MAT'L - HARD BRASS (NAVAL)
SCALE 2" = 1" 1 REQ'D

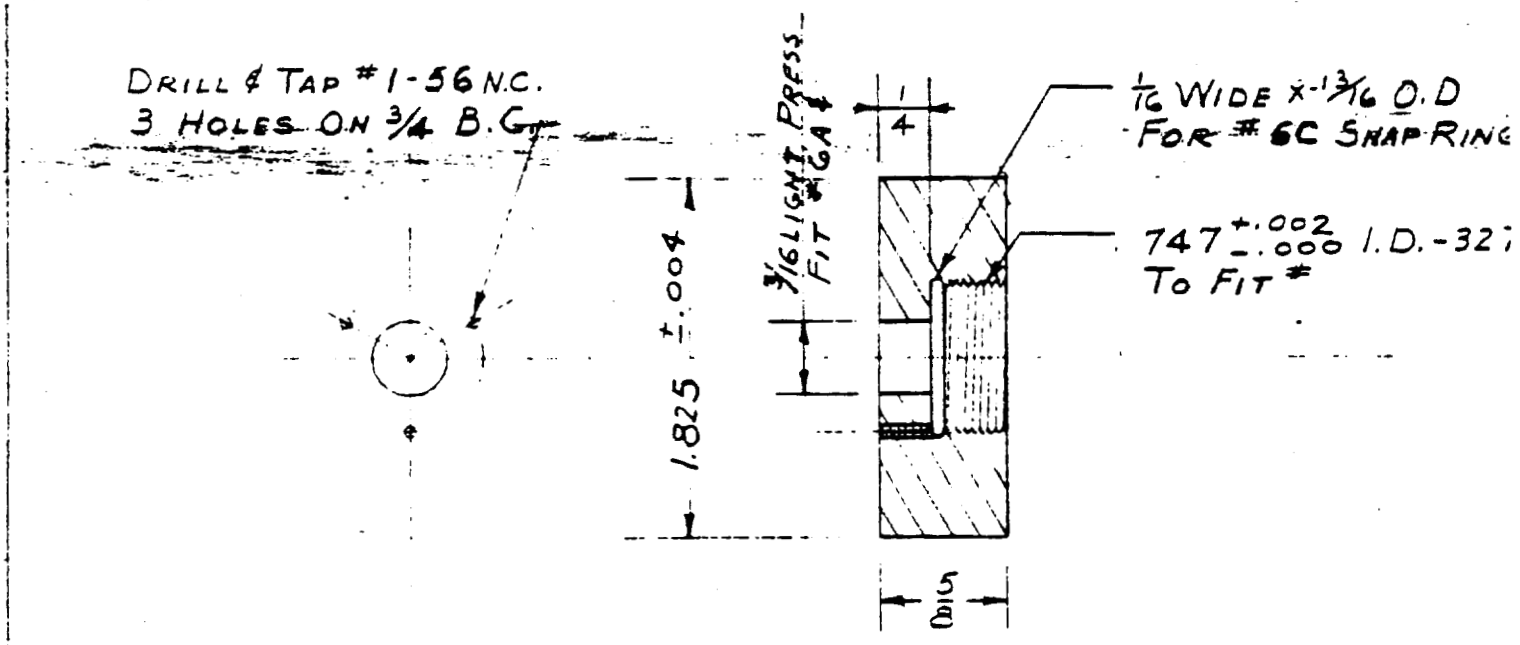

#7B INSULATOR
MAT'L - FLUOROTHENE
SCALE 1" = 1" 2 REQ'D

HEALTH PHYSICS
OAK RIDGE NATIONAL LABORATORY

ASSEMBLY #1, 2 & 3 NO 7

$\frac{1}{16} \times \frac{1}{16}$ SLOT

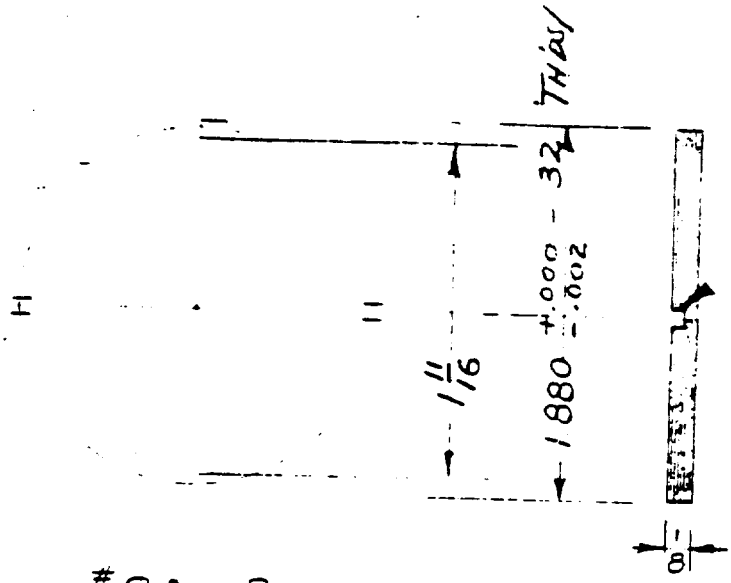

#8A RETAINER RING
MAT'L - HARD BRASS (NAVAL)
SCALE 1" = 1" 1 REQ'D

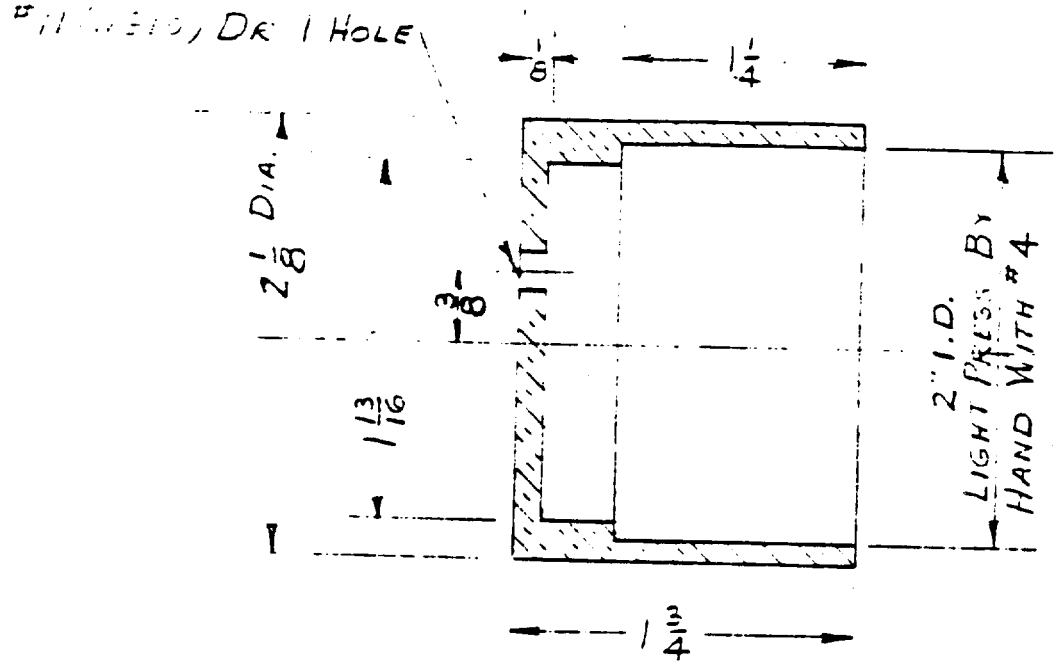

#8B CAP
MAT'L - HARD BRASS (NAVAL)
SCALE 1" = 1" 1 REQ'D

111950

HEALTH PHYSICS
OAK RIDGE NATIONAL LABORATORY

ASSEMBLY #18-3

No 8

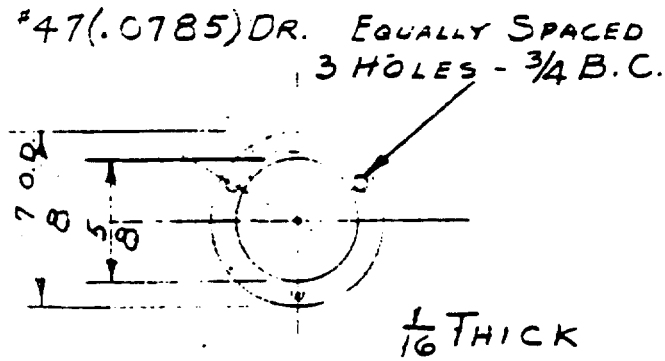

#9A LOWER GUARD RING
MAT'L - HARD BRASS (NAVAL)
SCALE 1" = 1" 2 REQ'D

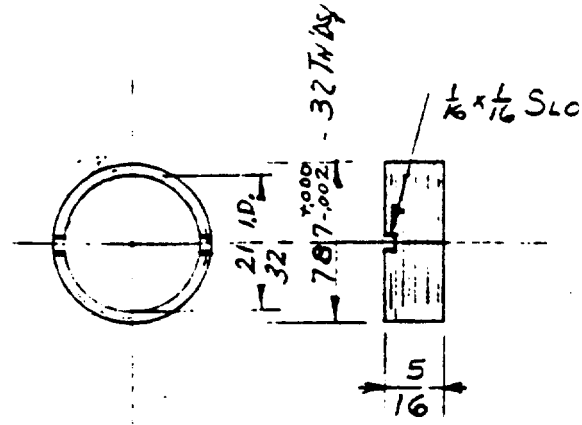

#9B GUARD RING
MAT'L - HARD BRASS (NAVAL)
SCALE 1" = 1" 1 REQ'D

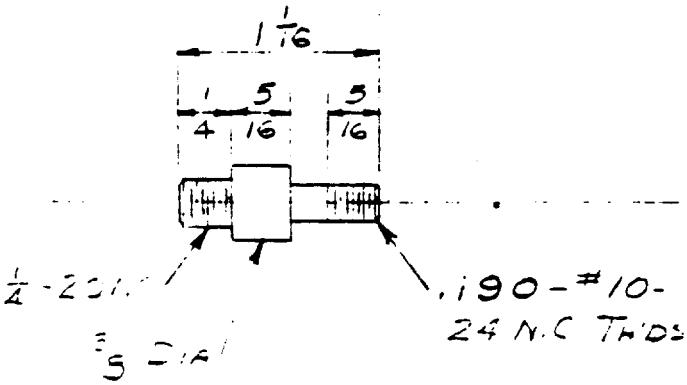

#9C CONNECTION POST
MAT'L - HARD BRASS (NAVAL)
SCALE 1" = 1" 1 REQ'D

1119951

HEALTH PHYSICS
OAK RIDGE NATIONAL LABORATORY

ASSEMBLY #1, 2 & 3 No. 9

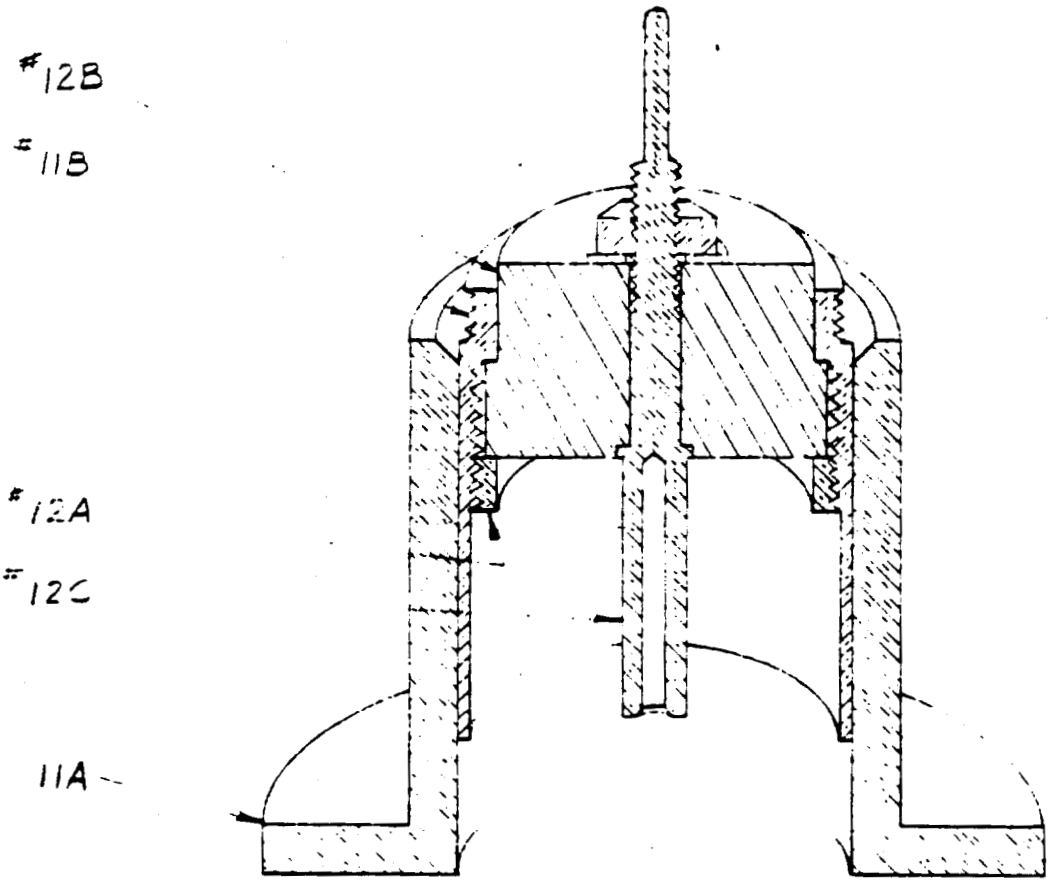

CONNECTOR ASSEMBLY
TYPE ONE
SCALE 2" = 1"

1119952

HEALTH PHYSICS
OAK RIDGE NATIONAL LABORATORY

DETAILS #11 & 12

No. 10

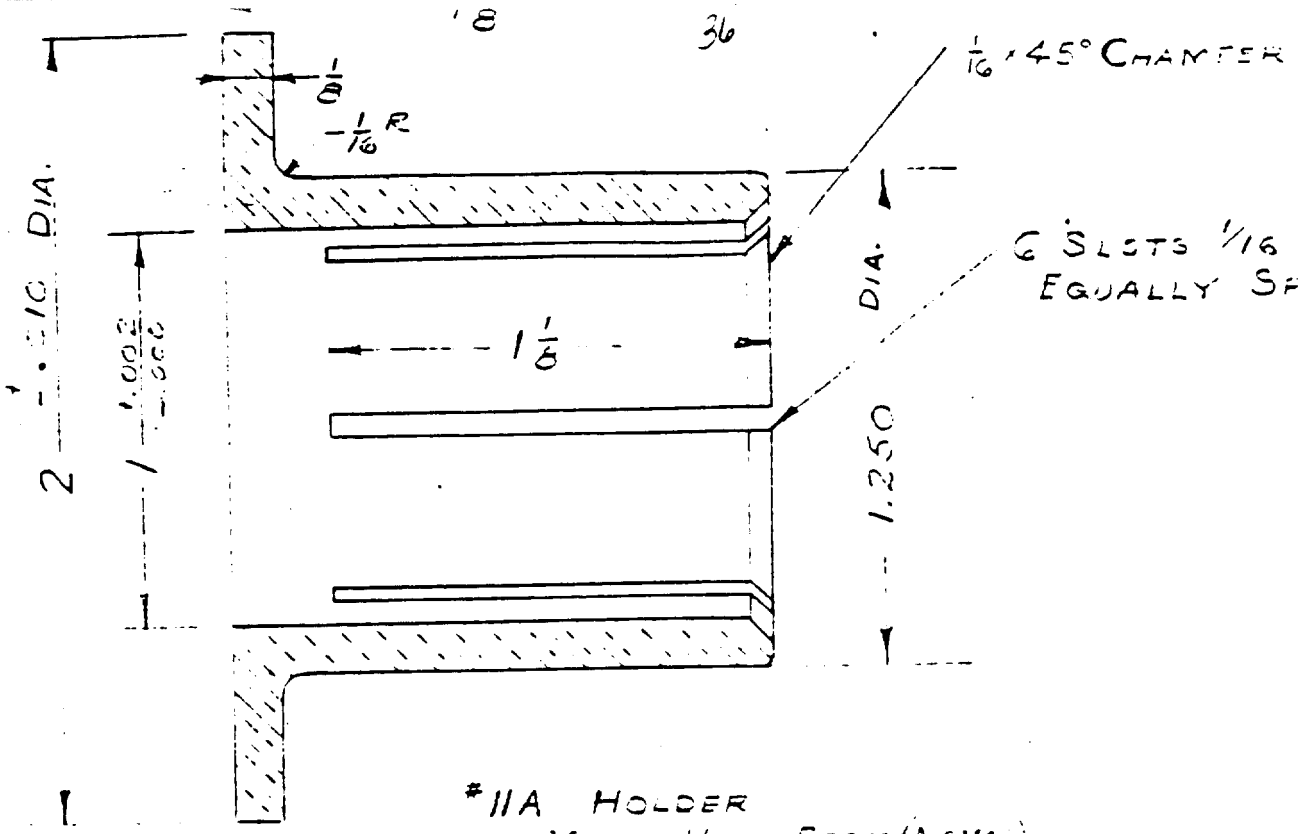

#11A HOLDER
MATL - HARD BRASS (NAVAL)
SCALE 2" = 1" — 1 REQ'D

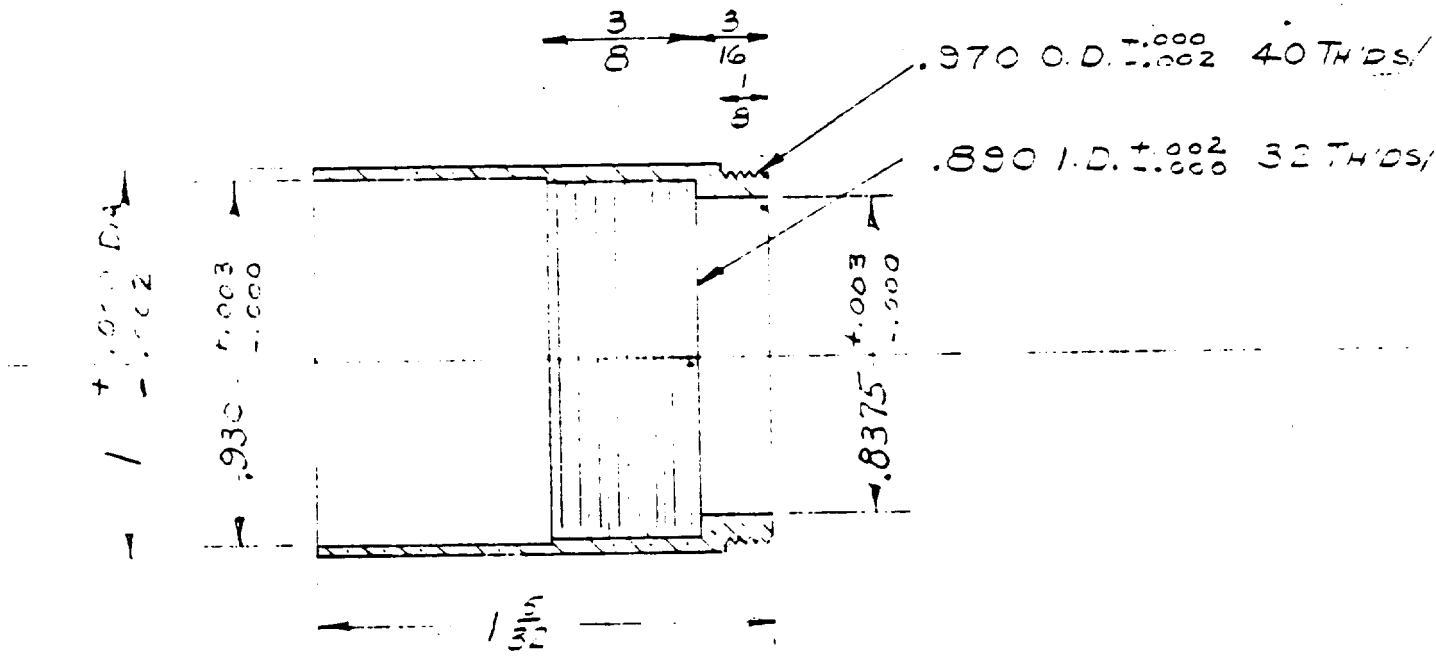

#11B BODY
MATL - HARD BRASS (NAVAL)
SCALE 2" = 1" — 1 REQ'D

HEALTH PHYSICS
OAK RIDGE NATIONAL LABORATORY

ASSEMBLY #106 NO. 11

NOT CLASSIFIED

11953

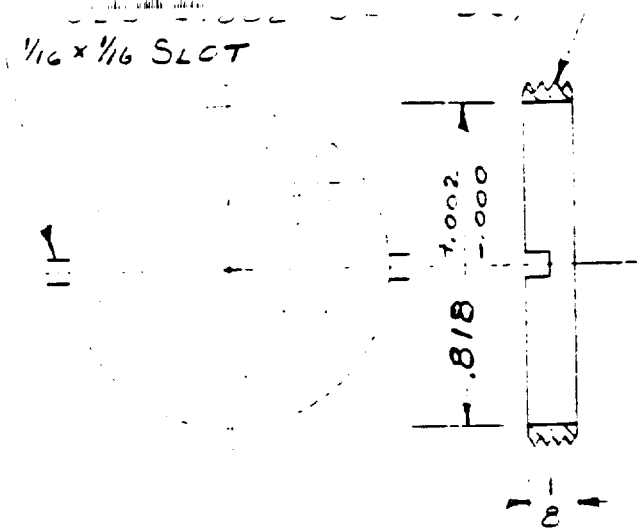

#12A RETAINER
MATL - HARD BRASS (NAVAL)
SCALE 2" = 1" — 1 REQ'D

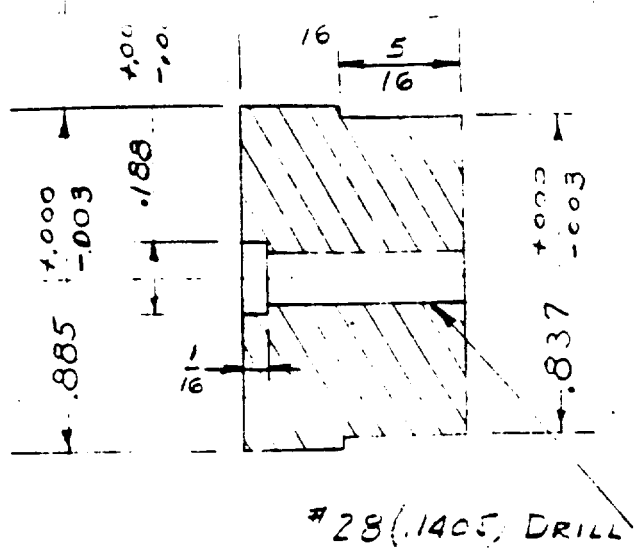

#12B INSULATOR
MATL - FLUOROTHENE
SCALE 2" = 1" — 1 REQ'D

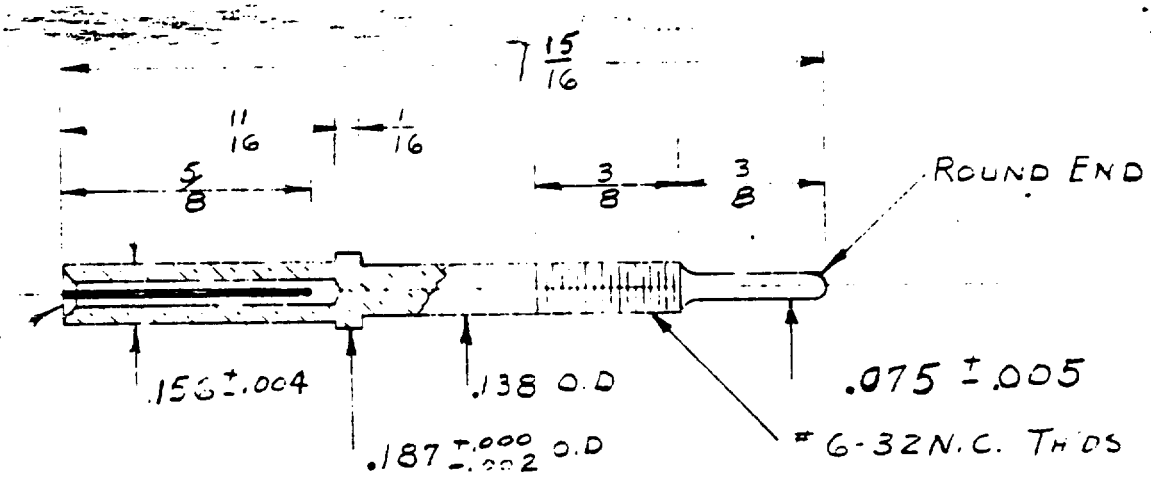

1/16 DRILL
1/32 × 45° CHAMFER
4 SLOTS .010 WIDE (APPROX)

#12C CONNECTOR POST
MATL - HARD BRASS (NAVAL)
SCALE 2" = 1" — 1 REQ'D

HEALTH PHYSICS
OAK RIDGE NATIONAL LABORATORY

ASSEMBLY #10 NO. 12

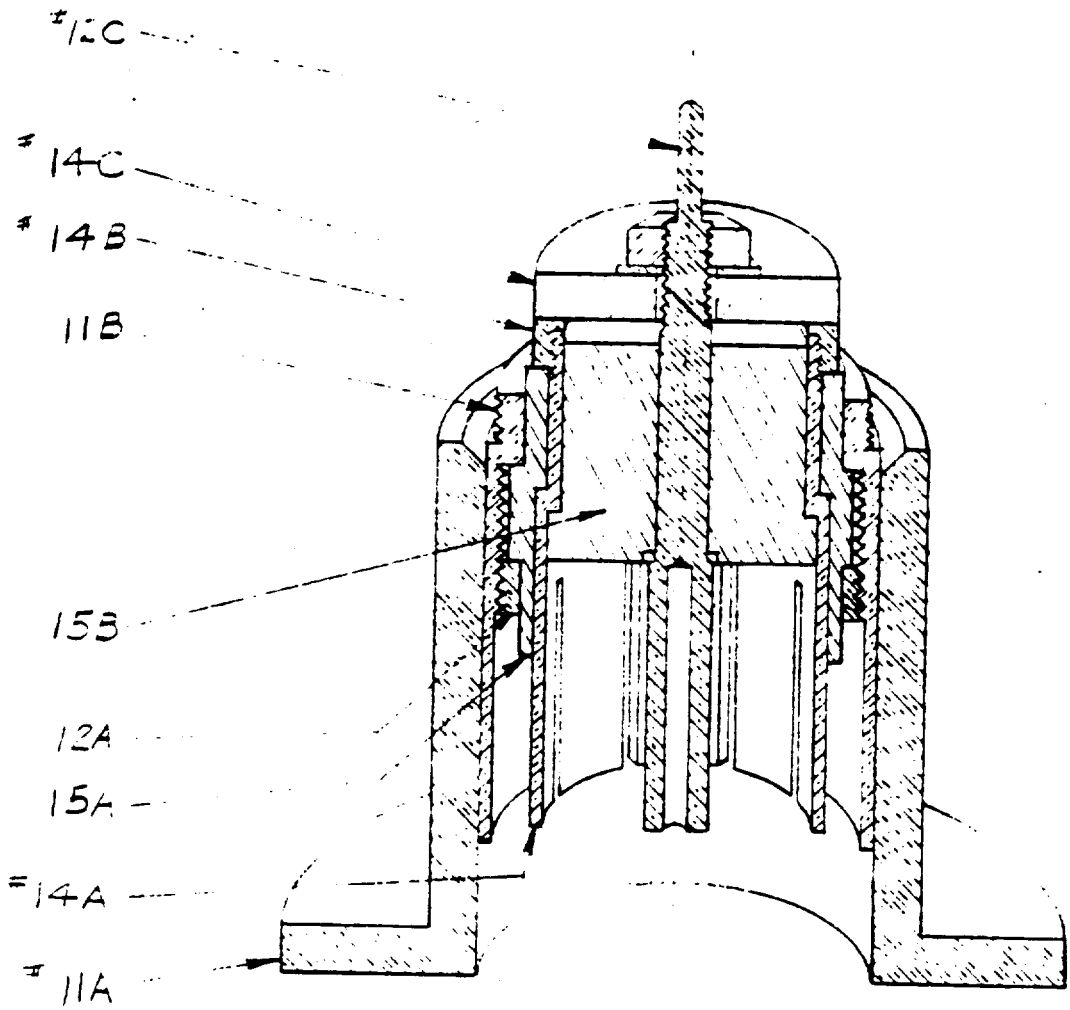

CONNECTOR ASSEMBLY
TYPE TWO
(WITH GUARD RING)
SCALE 2" = 1"

HEALTH PHYSICS
OAK RIDGE NATIONAL LABORATORY

DETAILS #11, 12, 14 & 15

NO. 13

1119955

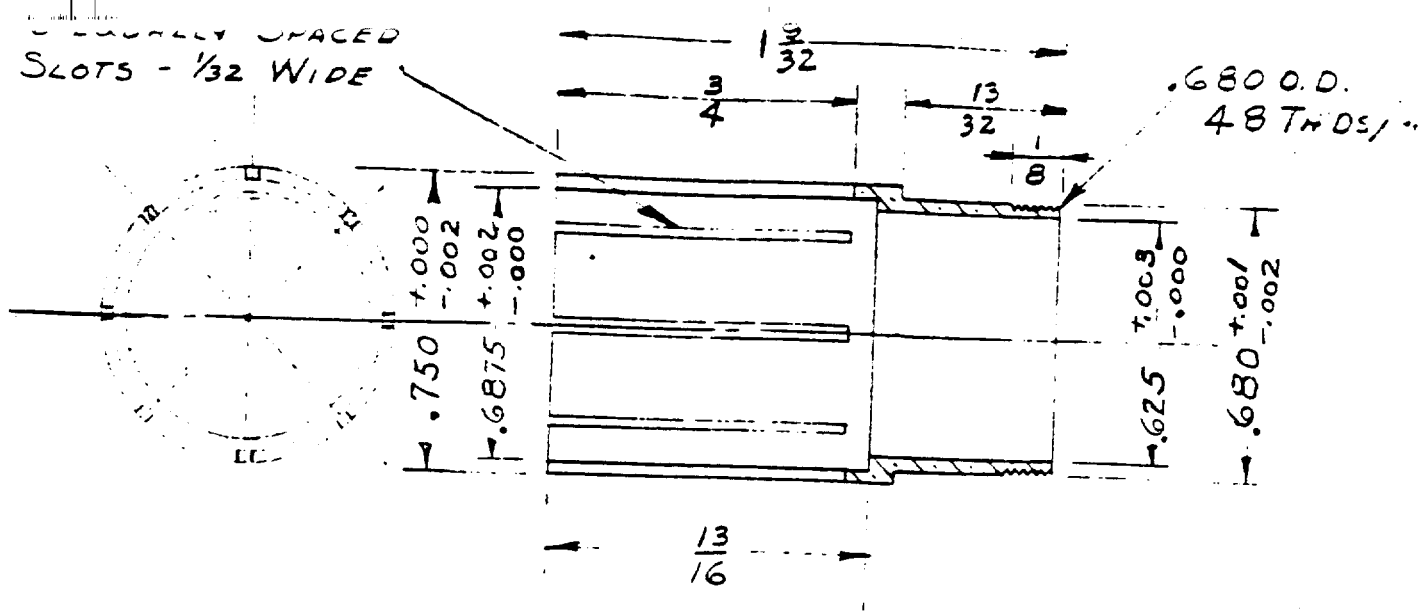

#14A GUARD RING
MAT'L - HARD BRASS (NAVAL)
SCALE 2" = 1" - 1 REQ'D

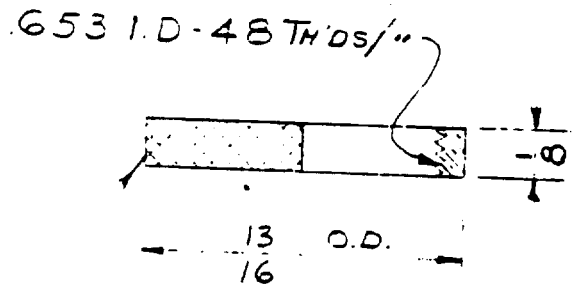

LIGHT KNURL

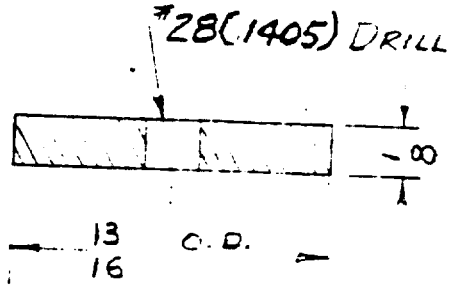

#14B GUARD RING RETAINER
MAT'L - HARD BRASS (NAVAL)
SCALE 2" = 1" - 1 REQ'D

#14C CAP
MAT'L - FLUOROTHENE
SCALE 2" = 1" - 1 REQ'D

119956

HEALTH PHYSICS
OAK RIDGE NATIONAL LABORATORY

ASSEMBLY #13

NO. 14

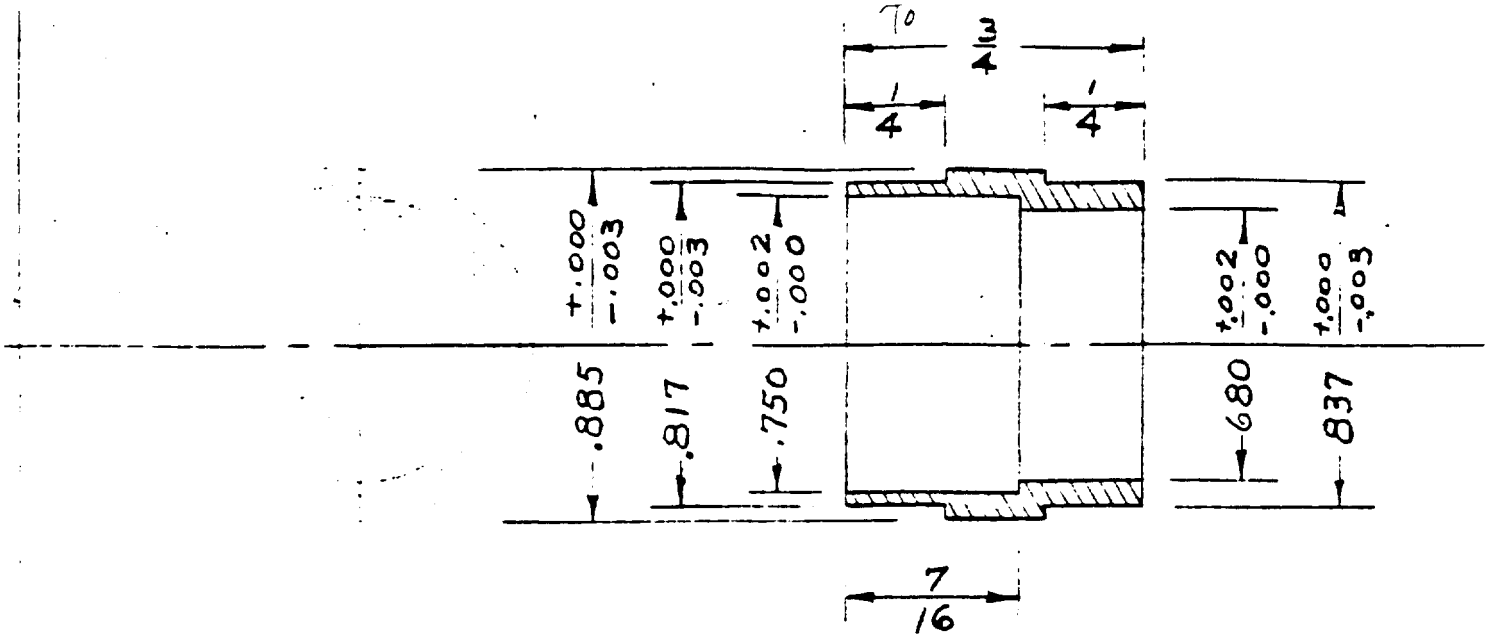

15A GUARD RING INSULATOR
MATL - FLUOROTHENE
SCALE 2" = 1" — 1 REQ'D

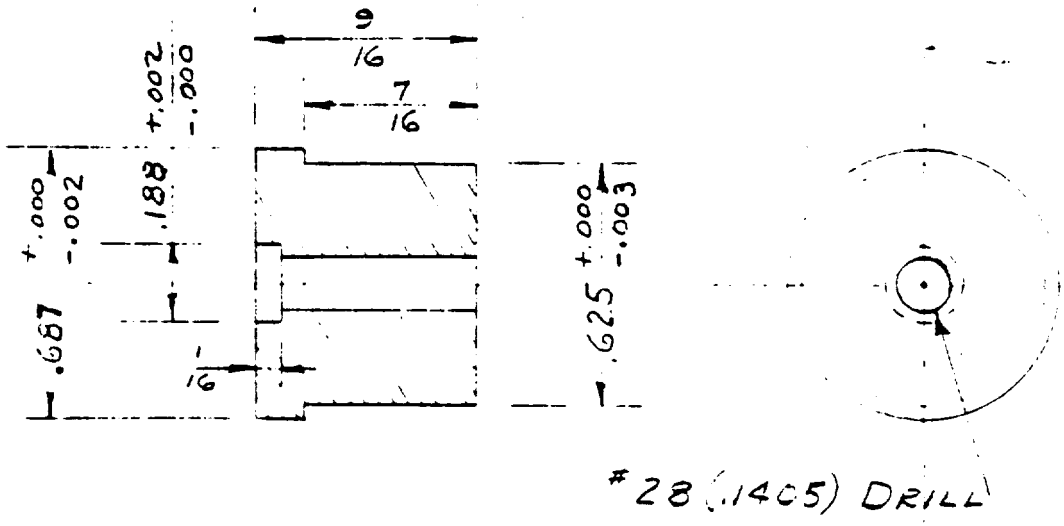

15B INSULATOR
MATL - FLUOROTHENE
SCALE 2" = 1" 1 REQ'D

1119957

HEALTH PHYSICS
OAK RIDGE NATIONAL LABORATORY

FOLDER # 13 No. 15

N.R.L.
Airborne Dual-Channel Radiation Detection System

Four components, a Radiation Detection unit, a Dual-Channel Counting Rate unit, and two recorders, make up this system devised by the Naval Research Laboratory which is used to record the coincident and gamma rays as a function of time.

For a complete description and laboratory evaluation of the system, the reader is referred to the NRL Report P-3339 "Airborne Dual-Channel Radiation Detection System" dated August 25, 1948 and "Operation and Maintenance Instructions on the Dual-Channel Radiation Detector" by G.K. Jense, E.N. Zettle, and F.M. Gager, dated 3 August 1948 (NRL Report: C-3600-536A/48).

The accompanying photograph shows the two units mounted on the extreme right with the recorders nearest the reader. The Detection Unit is on the bottom in the rack. A later modification placed the Detection Unit on the wooden shelf directly beneath the Brown recorder associated with the Conductivity chamber, and the Counting-Rate Unit was remounted in the same position as shown on page . This was possible because the cathode follower out-put stage in the Detection Unit affords undistorted signal input to the Counting Unit for cable lengths up to about 100 ft. The cable length at present is 20 ft.

1119958

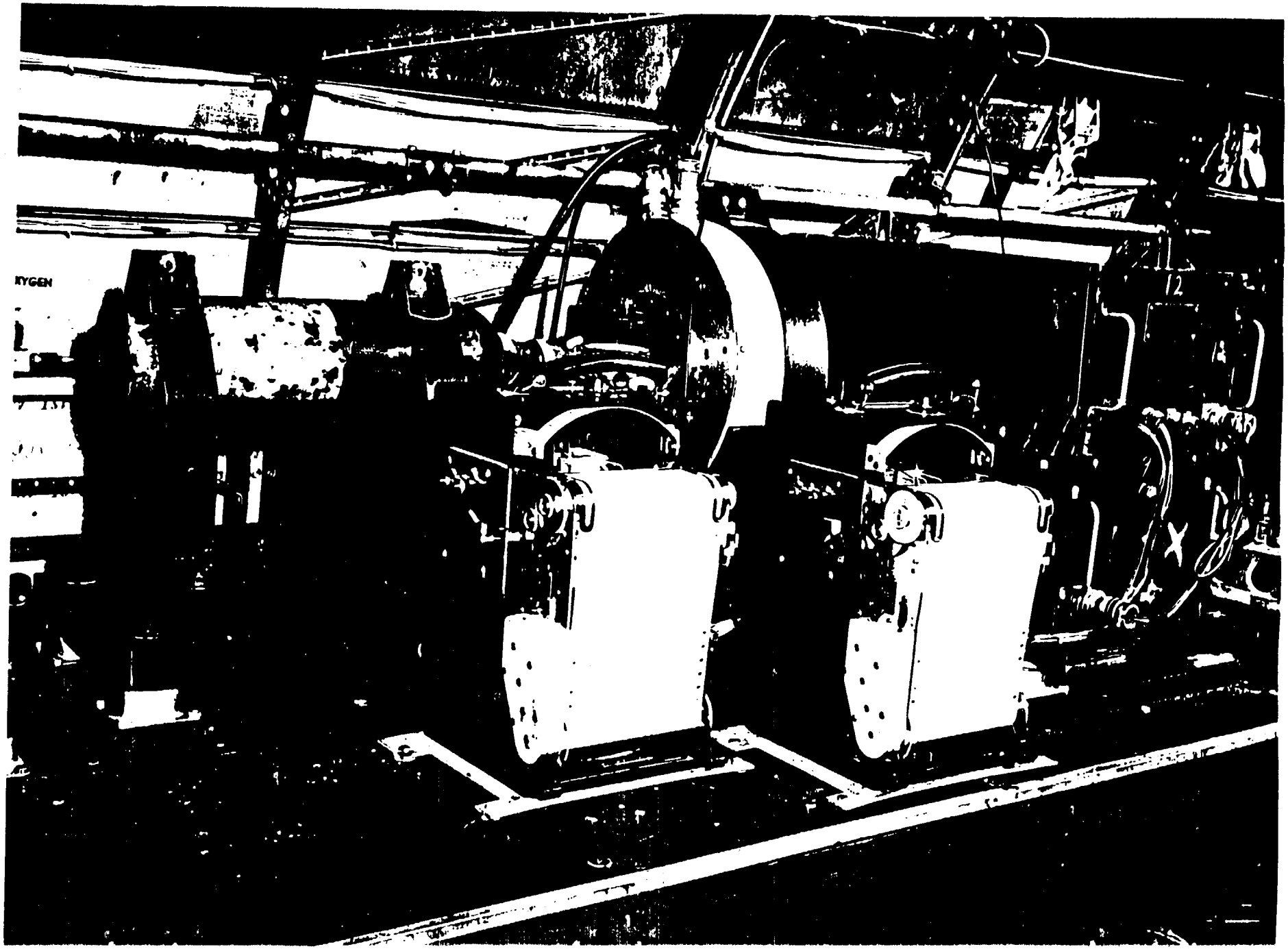

6591199

Because of the difficulty of calibrating on the ground without severely draining the aircraft batteries, it was necessary to construct a transformer-operated unit for use with the 115 volt power unit. Built with miniature tubes, it follows closely the design of the NRL units, except that the detector unit and the count rate unit have been combined on one chassis (pages 44 and 45). It has been used with very good results during the last half of the project. This modified unit may be used with both the recorders and with a meter on the pilot's instrument panel. This meter is mounted on the same panel as the conductivity repeater indicator and gave the pilot an indication of the strength of the radioactivity.

1119960

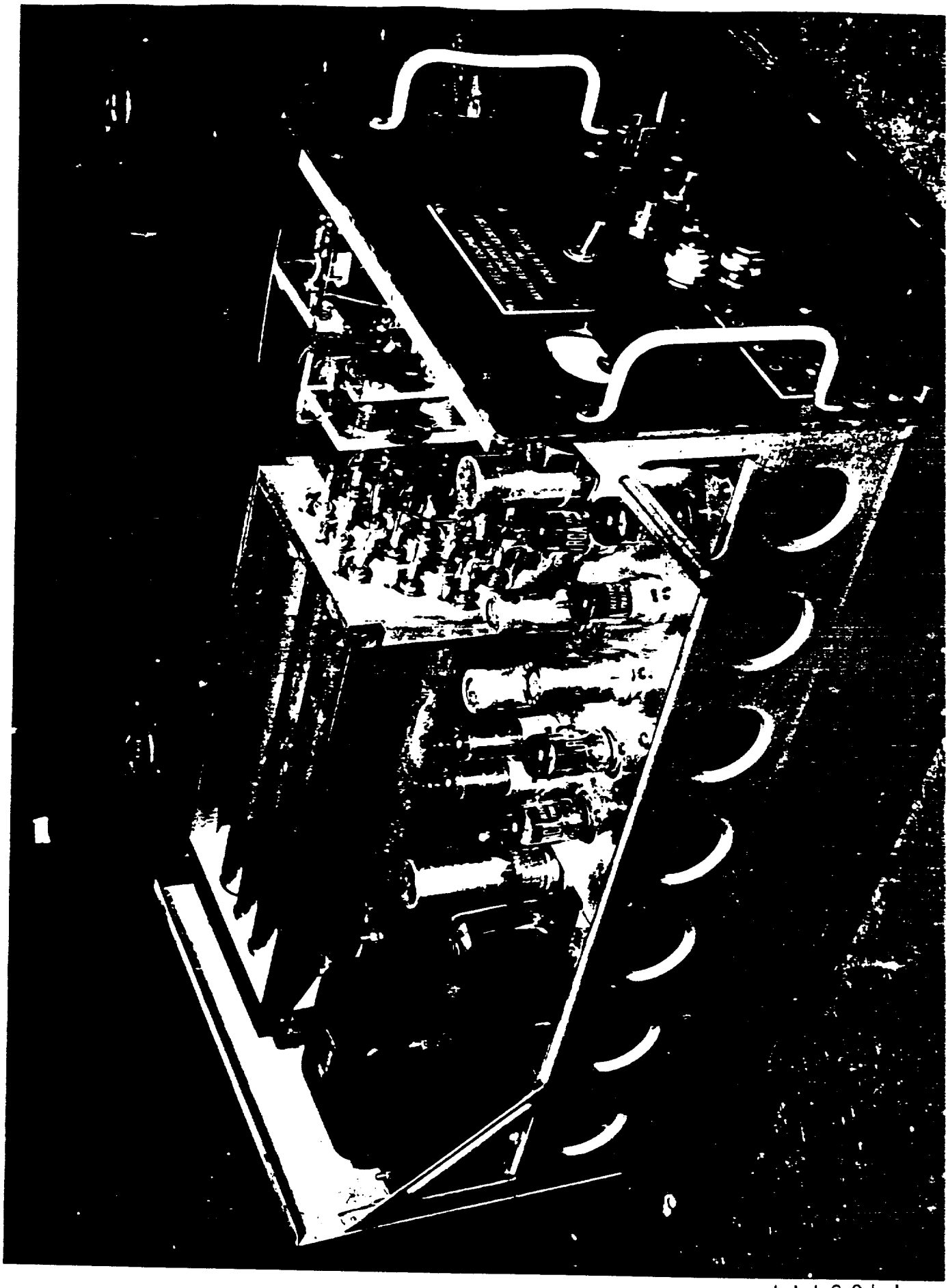

1119961

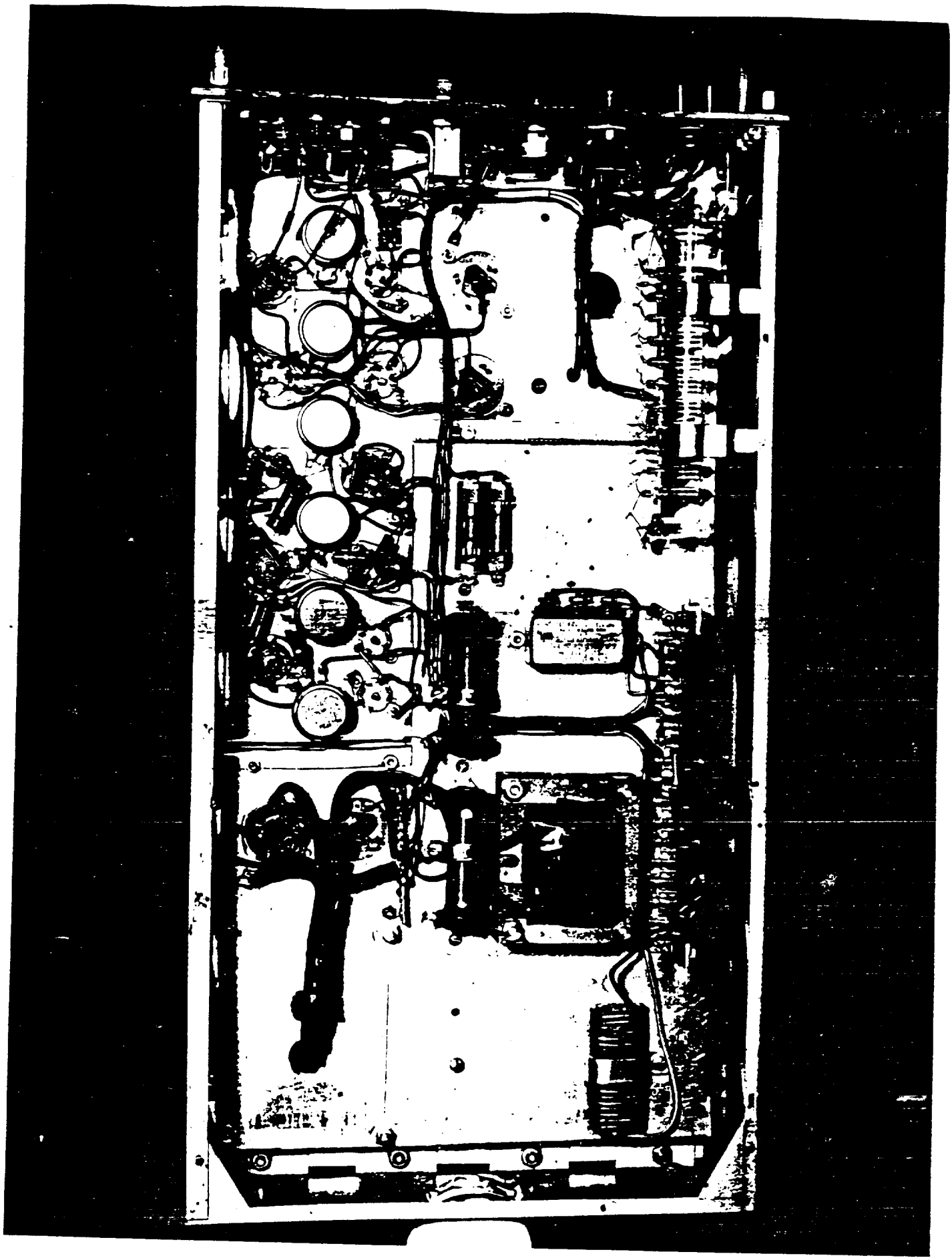

1119962

High Pressure Ionization Chamber

Consisting of two units, a high pressure ionization chamber and a Chicago Vibrating Reed Electrometer, this instrument is perhaps the most sensitive of the aircraft's instrument complement.

Shown on pages 41 and 47 are the two component parts of this instrument with its recorder. The ion chamber was built up at the Oak Ridge National Laboratory and is filled with about 100 atmospheres (1450-1500 psi) argon. It is connected to the vibrating reed Electrometer through a switch box containing a grounding switch and a sensitivity selector switch. A Brown recorder keeps a constant record of the changes in ionization frequency.

A typical self-balancing vibrating reed electrometer circuit is shown below

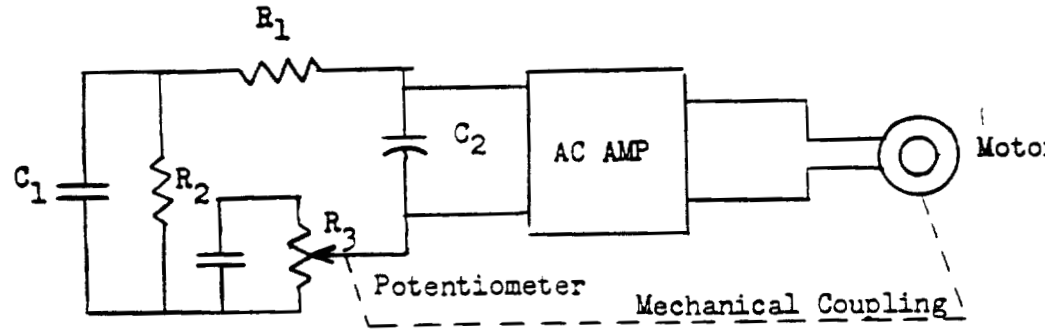

1119963

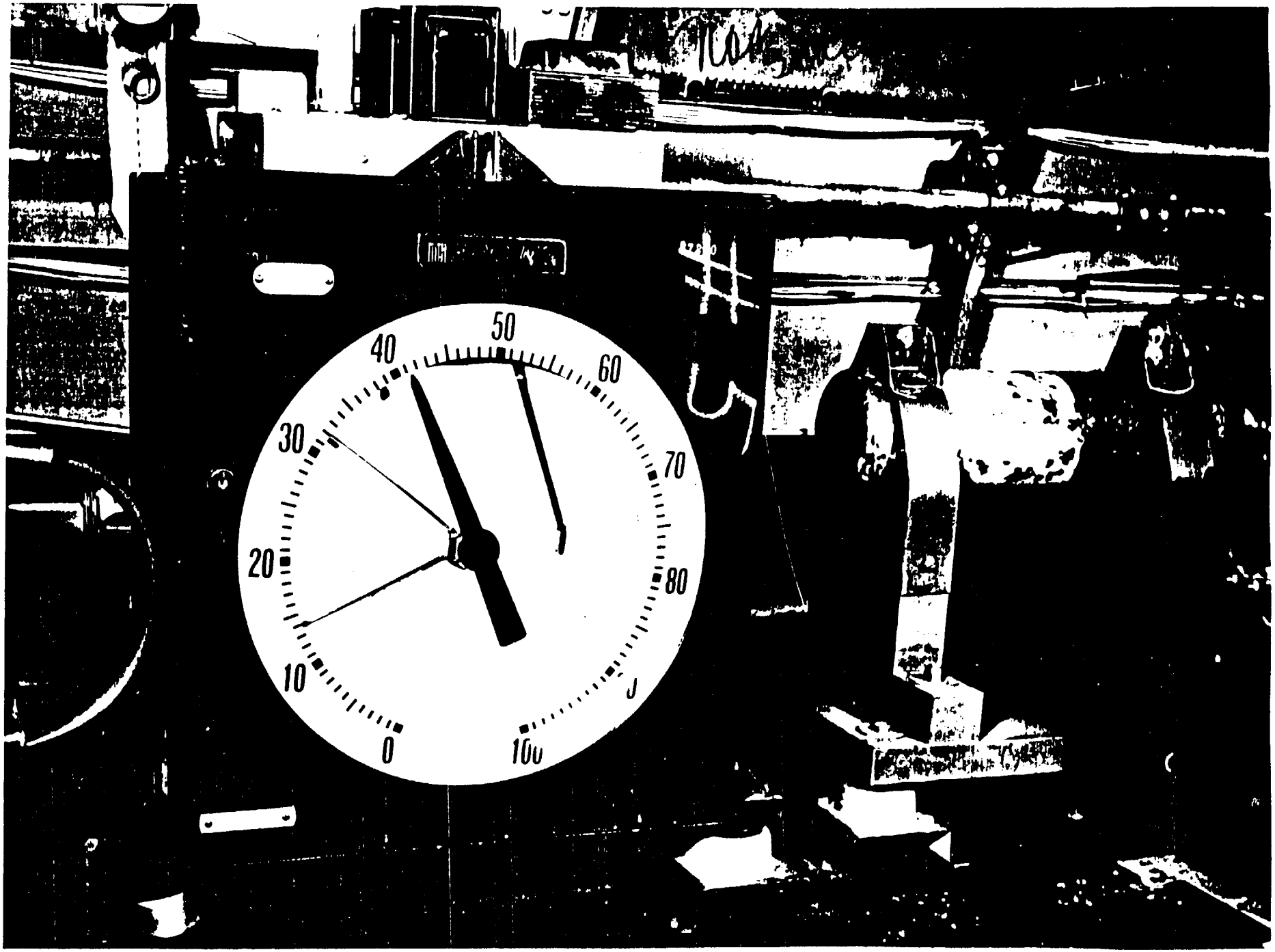

1119994

We may think of the ionization chamber as having capacity, as it in fact does, and represent it as C_1. When exposed to radiation, the chamber becomes a charge producing system, and causes a potential difference to appear across R_2 and C. C_2 is the vibrating condenser, its capacitance being constantly varied by an electromagnetic force. Here this potential difference is converted to an A.C. signal which in turn is amplified. The amplifier output is used to drive a motor which moves the arm of potentiometer R_3, returning the system to a null position.

1119965

Alpha Amplifier and Atomic Instrument Company Scaler

The problem of counting ionizations due to alpha particle was solved very effectively by Ralph Firminhac in his high-gain amplifier development for supplementary use with the Atomic Instrument Company scaler.

By referring to the preceeding page one may more easily follow the discussion of this instrument combination. The instrument is installed on the bench just to the right of the Eltronics scaler.

At the extreme right is the aluminum chamber which holds the filter paper to be counted. It is simply an ion chamber flushed with a stream of argon throughout the counting operation. The signal is fed into the high-gain amplifier and from there to the scaler. The register near the front edge of the table records the alpha counts. This apparatus was used primarily in processing filters for the filter efficiency tests.

A schematic and photographs of the amplifier follow. A more complete report on this amplifier is being published by Mr. Firminhac and will be available shortly. [1]

[1] General Purpose Alpha Counter - R.H. Firminhac - ORNL-338

1119966

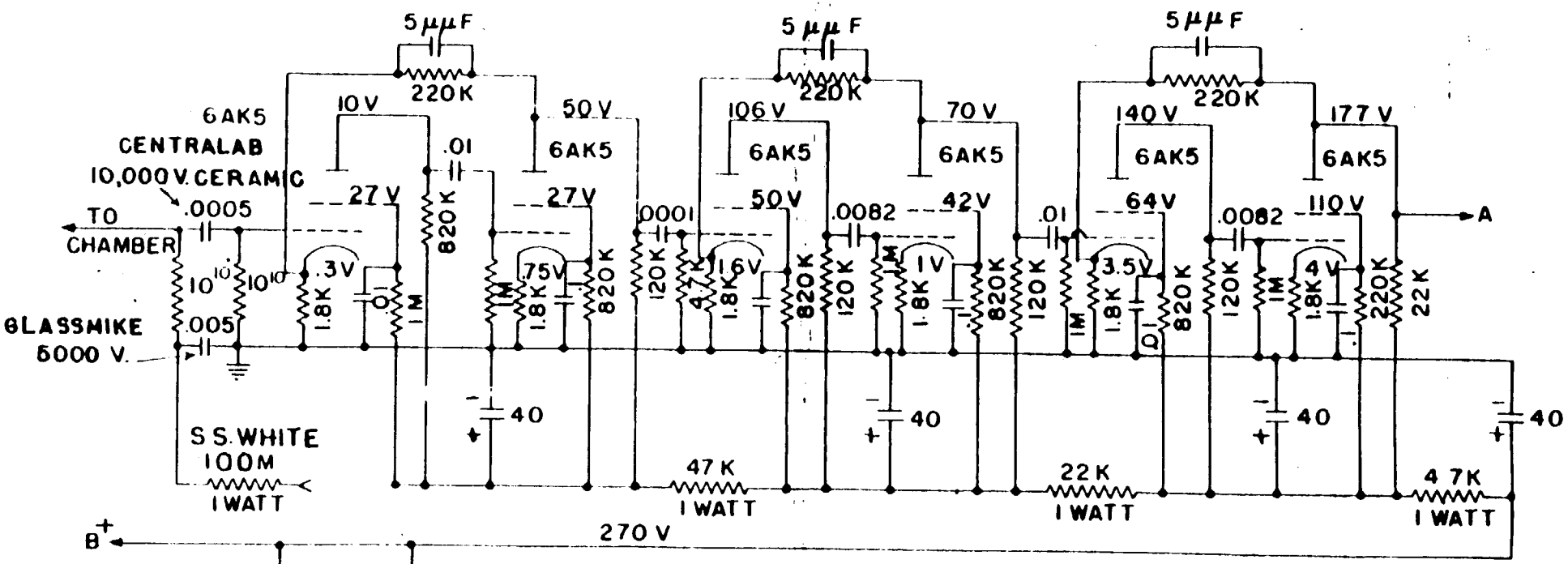

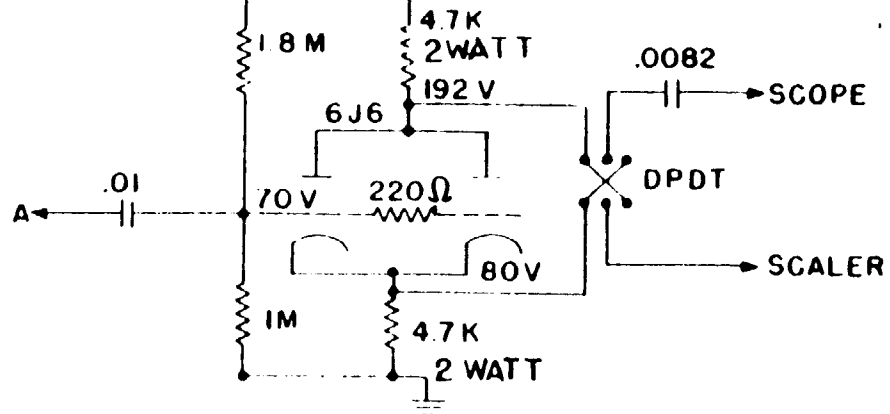

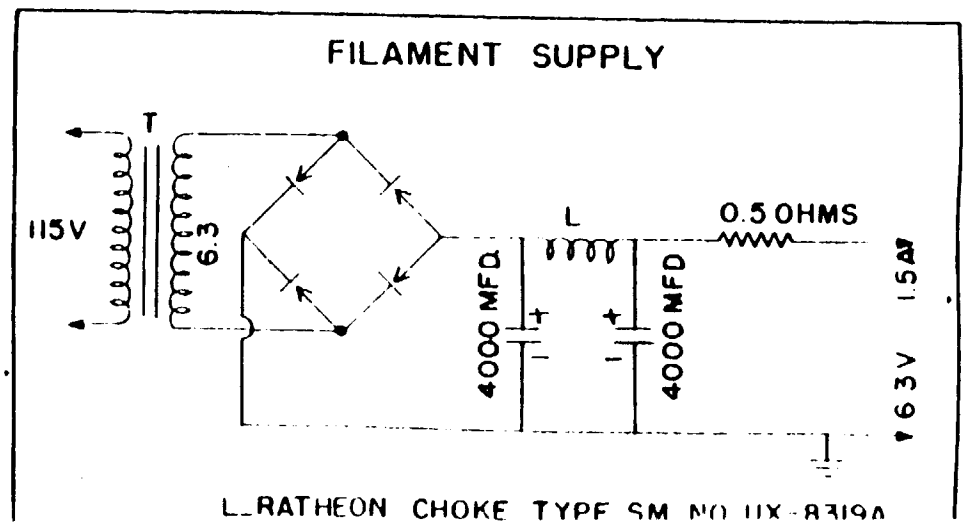

1119967

ALPHA AMPLIFIER

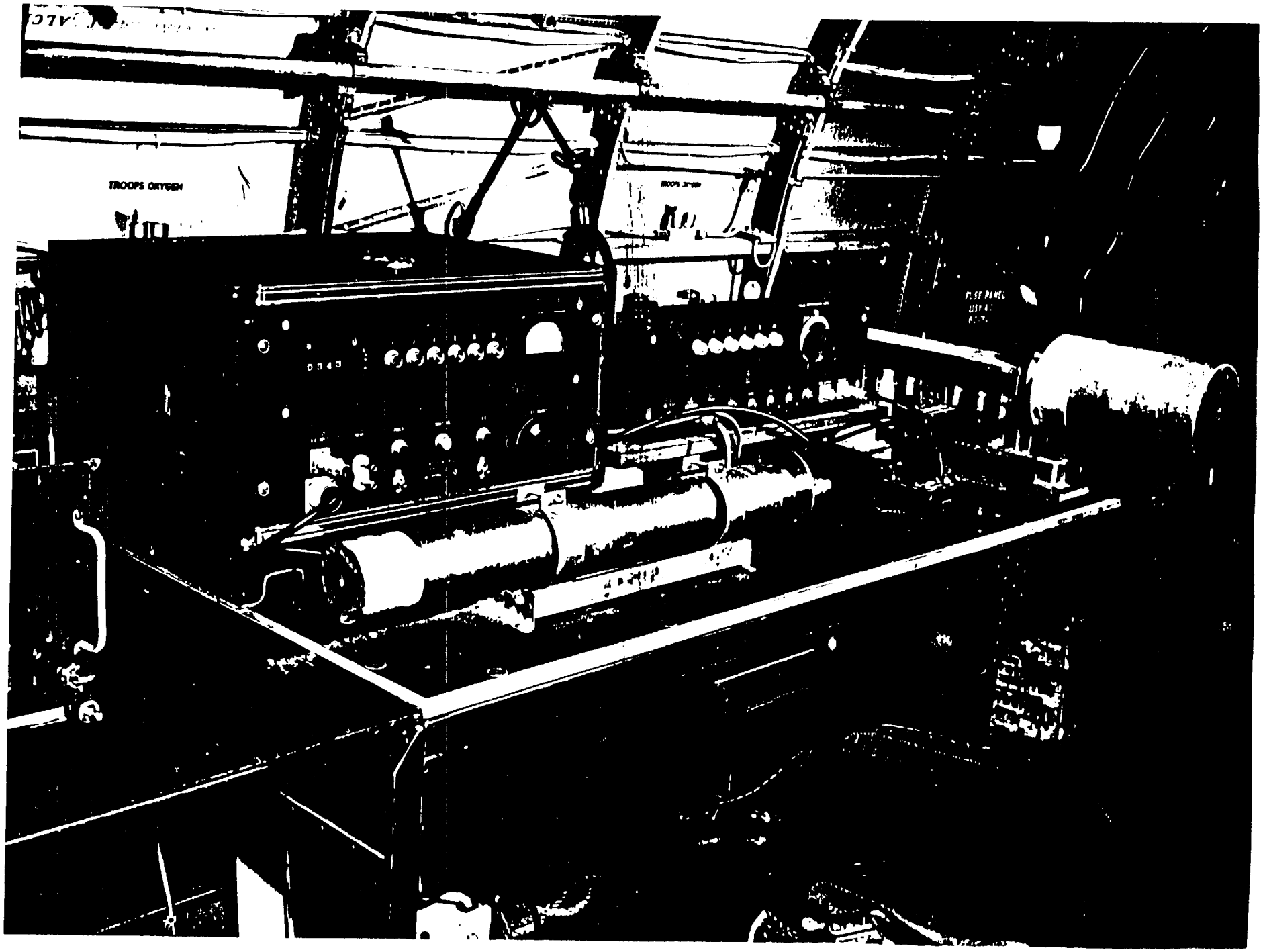

99611168

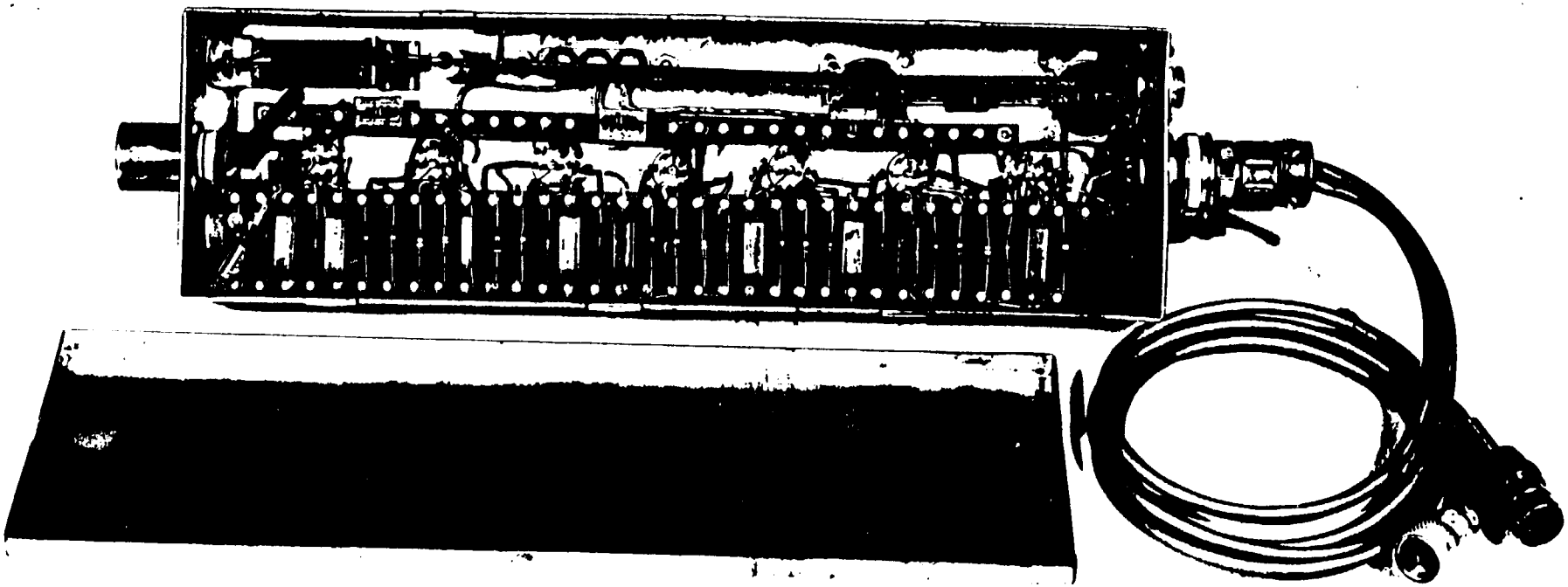

1119969

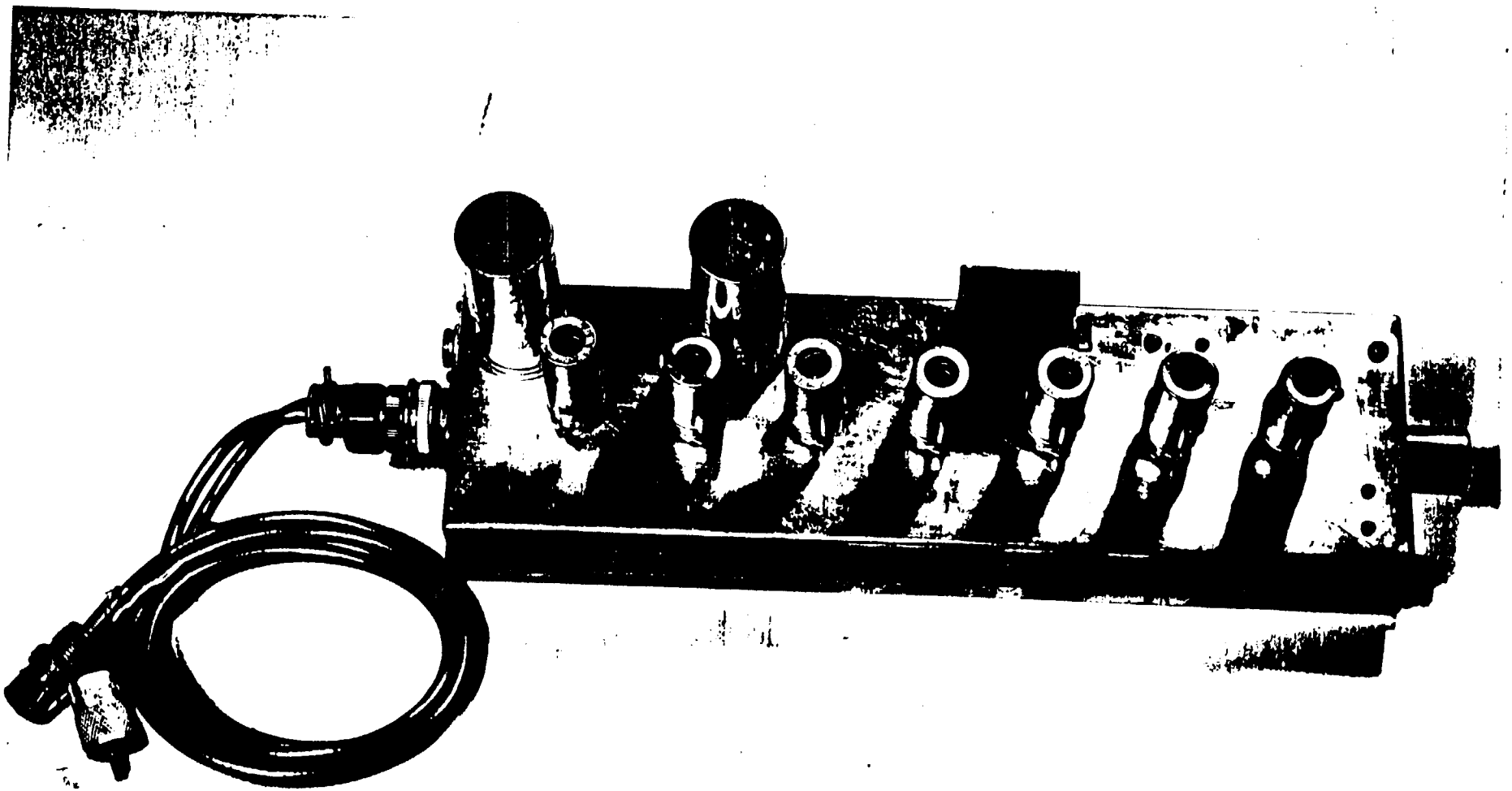

1119970

El-tronics Scaler

This standard "scale of 64" scaler was fed with a Radiation Laboratories GM tube (shown encased in a .028" thick brass tube in front of the scaler on page 51). The tube is 24 inches in length, is 2 inches in diameter and has an effective length of 18 inches.

Filter papers inserted around the GM tube were counted for beta radiation. In order to cut down weight, the lead pig ordinarily used with the wrap-around counter was replaced with a brass tube. Although removal of the lead pig increased the background count by a factor of two, the counting rates of the filters were sufficiently high that no significant counting error was introduced.

1119971

Filter Box

Radioactive air contaminates may be divided into two classes: Gaseous and Particulate. Both are present in the atmosphere and both may have the same effect upon GM tubes, ion chambers, or similar detection devices. The presence of particulate matter may be determined only by the use of filters - through which air samples are drawn. This may be done on the ground by using a blower to force air through the filter or by exposing the filter to the slipstream when used on an aircraft. Both the size of the filter and the speed of the air are important in both cases.

In order to detect the presence of airborne particulate matter in the vicinity of Oak Ridge and Hanford, filters were carried in the aircraft by use of the standard AMC filter box.

AMC Filter Box Installation

Shown on the following pages is the installation of this Filter Box with associated differential manometers. The frontispiece will also give the reader a better idea of the relative location of the box on the airplane.

This box is constructed to accommodate two slide-in type filter screens and used the venturi principle to maintain a pressure

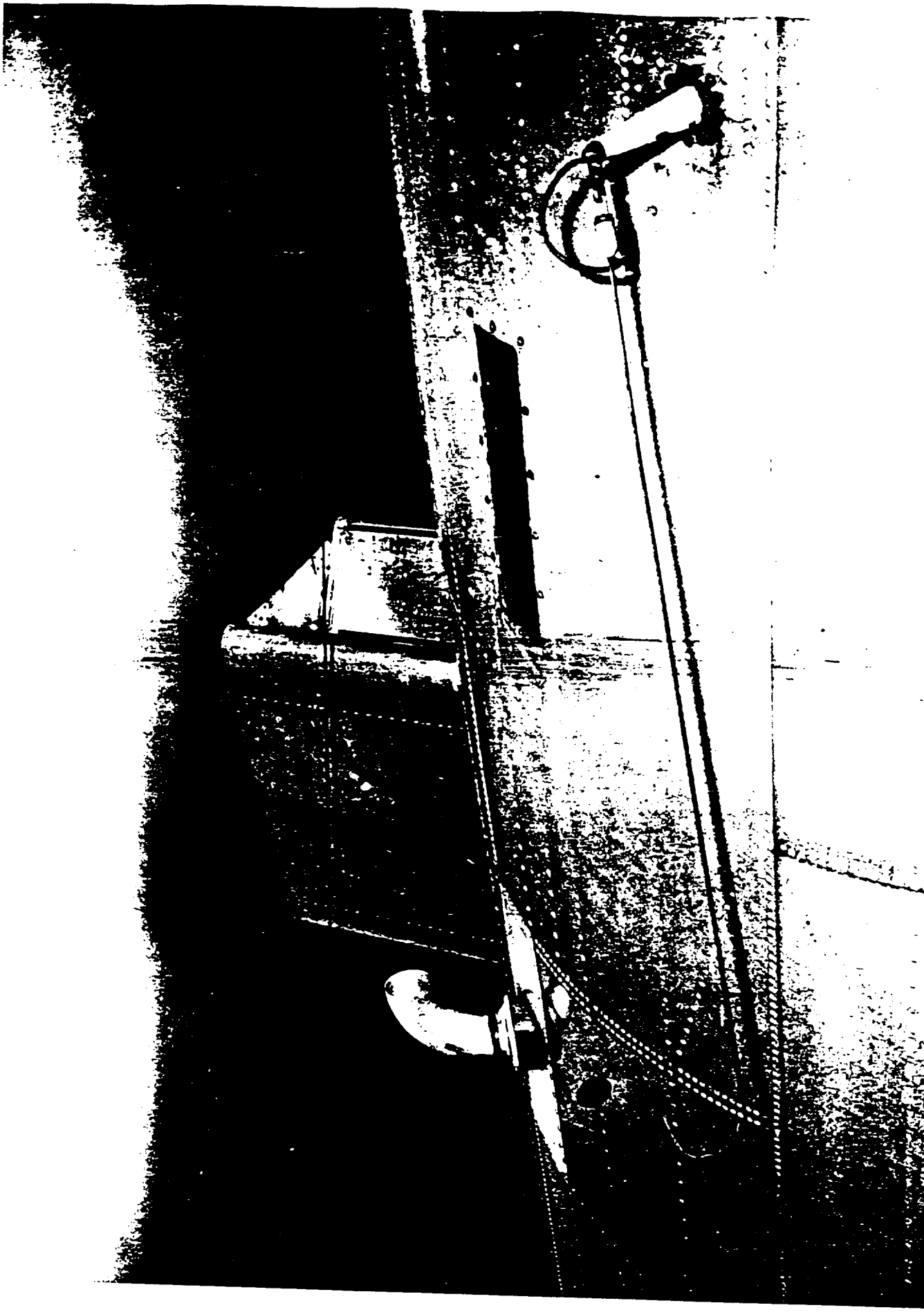

1119973

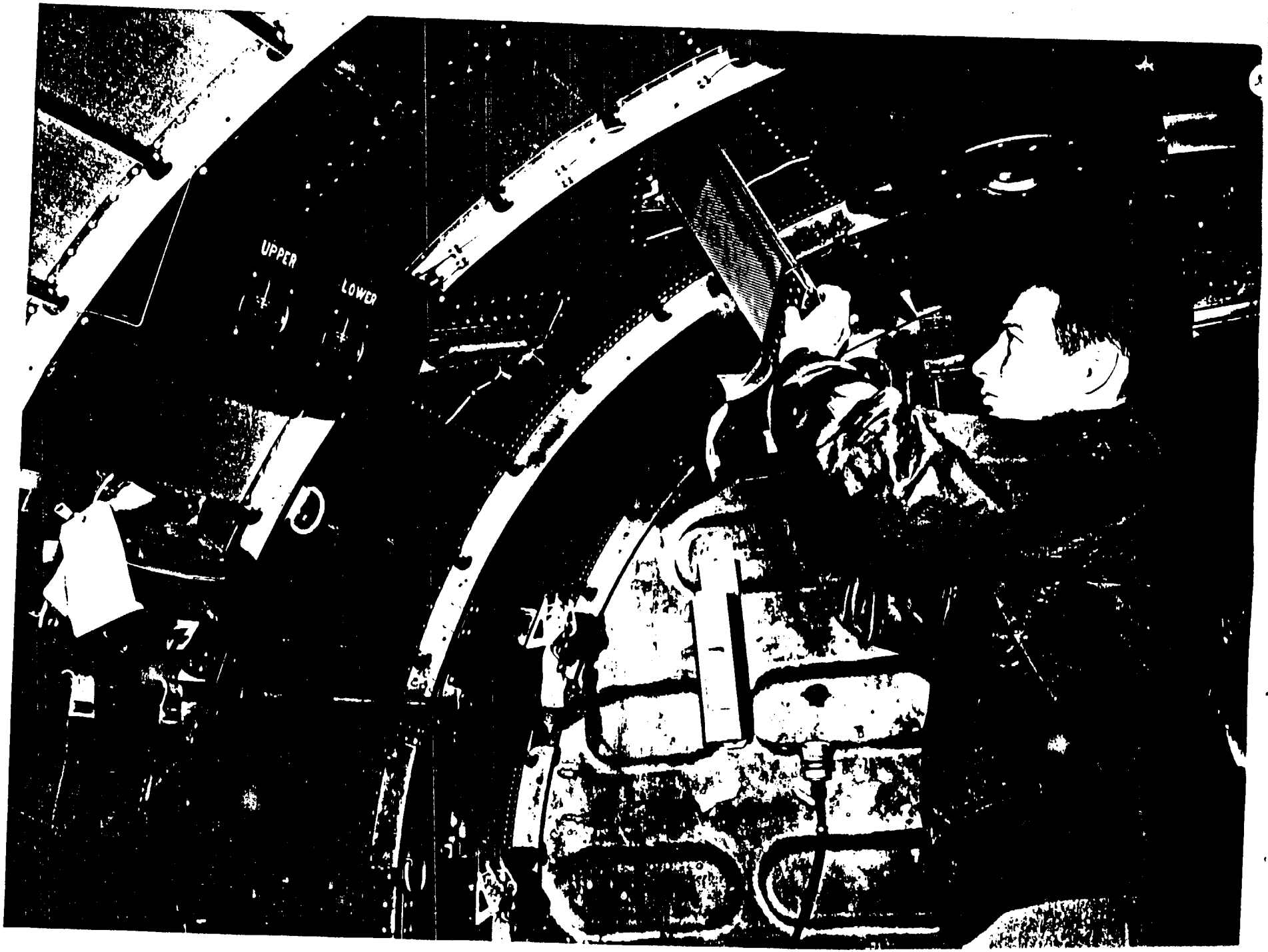

1119974

drop across the filters. The Filter paper used has an area of one square foot and is 18" x 8". Filter screens are retained in the box by spring steel runner clips and with locking handles. Pressure drop across each filter is read from the manometers on the left cabin wall, usual pressure drop being 7 to 8 in/H_2O at 150 mph indicated air speed. Air flow through box is approximately 450 cu ft per min at the same speed.

One of the questions brought up as an objective of this project was efficiency of these filters. This problem was taken up by Dr. Davis and his findings may be found as a separate report in the appendix to the instrument section.

1119975

COMPARISON OF INSTRUMENTS

The following table shows pertinent characteristics of the three instruments: pressure ionization chamber, NRL Geiger counter dual-channel radiation detection (NRL Unit), and air conductivity apparatus.

Instrument	Calibration in curies of Co^{60} per liter per division	Background	Average Background Fluctuation	Time Constant 90% response
Pressure Chamber 10^{-15} amp/div	3.6×10^{-14}	145 div.	15 div.	55 seconds
NRL Unit 0.35 cts/sec/div	5.2×10^{-14}	50 div.	5 div.	23 seconds
Conductivity Apparatus 5×10^{-13} amp/div	5.5×10^{-14}	15 div.	3 div.	4½ sec/100 div

Type of Radiation Measured

The air conductivity apparatus, being essentially an ion collector, responds to the intensity of ionization in the

1119976

air passing through the tube. This ionization in turn may be produced by any ionizing radiation such as cosmic rays, alpha, beta or gamma radiation or may be suppressed by such things as smoke or fog which produce large ions.

The ion current due to the ions collected per unit time can be shown to be

$$i = 4\pi CV\lambda$$

where i is the current, C the capacity of the collecting tube only, and λ is the conductivity of the air. The conductivity can be expressed as

$$\lambda = nek$$

where e is the electronic charge, n the number of small ions/cc and k the mobility of the ions (ca 1.5 cm/sec/volt/cm). Actually we should include terms on the right side of the equation for larger ions but it is found that over 95% of the conductivity is due to small ions.

The number q of ions produced per second per cc can be written as

$$q = \frac{dE}{W} = \frac{3.7 \times 10^{10}\ cE}{W}$$

1119977

where d is the number of disintegrations per second per cc, c is the curies per cc, E the total energy of radiations per disintegration, and W is the electron volts to produce one ion pair (about 32.5 volts) and is roughly independent of the type of radiation (alpha, beta or gamma).

Under normal equilibrium conditions the number of ions produced per second per cc is equal to those recombined per second per cc so that we may write

$$q = \alpha n^2 + \eta Nn + \eta_0 N_0 n$$

where N is the number/cc of charged condensation nuclei or large ions, N is the number/cc of uncharged condensation nuclei, α is the recombination coefficient between the small ions, η and η_0 the recombination coefficients between the small ions and the respective nuclei. For ordinary conditions near the ground the last two terms in the above equation are about equal and large compared with αn^2 so we may write the approximate equation

$$q = 2\eta Nn$$

which indicates that the conductivity (which is proportional to n) is proportional to q and inversely proportional to N.

1119978

The NRL Geiger Counter unit is sensitive to gamma rays and cosmic rays. The efficiency of detection of gamma rays rises from .15% for 0.2 mev gammas to 1.3% for 2.1 mev gammas.

The pressure ionization chamber is sensitive to the same type of radiation as Geiger counters but probably has a different energy vs efficiency curve.

Calibration

To measure the sensitivity of the pressure chamber and the NRL unit two radioactive sources were used. One, an 83 microgram radium source and the other, a 3.44 micro-curie source of Co^{60}. The response of the two instruments is given in the following table:

Instrument	Source	Distance	Net Reading Above Background	Div/uc at 36"
Pressure Chamber	Co^{60}	24"	105	13.6
Pressure Chamber	Ra	36"	635	7.65
NRL Unit	Co^{60}	36"	32.5	9.45
NRL Unit	Ra	88"	63	4.54

1119979

The last column has been calculated assuming the inverse square relation between response and distance of source. One division is equal to 10^{-15} amps, 0.35 cts/sec and 5×10^{-13} amps for the pressure chamber, NRL Unit and conductivity apparatus respectively.

Following the plan outlined by Faust and Johnson* for the computation of the response of a GM tube to continuous distributed sources, the following table was calculated:

Source	Pressure Chamber	NRL Unit	Conductivity Apparatus
Co^{60}	3.6×10^{-14} c/l/div	5.2×10^{-14} c/l/div	5.5×10^{-14} c/l/div
Rn	5.6	9.4	1.0
A^{41}		9.7	9.0
Xe^{133}		90	84
Kr^{85}		∞	60
I^{131}		1.7	12.

* W.R. Faust and M.H. Johnson, "Multiple Compton Scattering" Physical Review, Vol. 75, No. 3, February 1, 1949, pages 467-472.

1119980

A comparison of the deflection of the NRL unit and the conductivity apparatus for flights through the trajectory of the pile cooling air and dissolver gases gave the relative response of the two instruments to distributed sources of A^{41} and Xe^{133}.

The sensitivity of the conductivity apparatus is assumed proportional to the total average energy of radiation. The energy of the various sources were given on page 18. The beta radiation energies listed are the maximum energies; the average energy used was 1/3 of the maximum. The total average energy taken was then the sum of the energy of alpha and gamma radiation plus 1/3 of the beta energy listed per disintegration. The gamma ray efficiency of the NRL unit was taken from Faust and Johnson*. The gamma ray efficiency of the pressure chamber was not determined except for Co^{60} and Ra.

It is seen that the NRL unit is insensitive to Kr^{85} (no gamma), while the conductivity is sensitive. It is to be noted that the conductivity apparatus is much more sensitive to Rn which is a contributive background factor. The conductivity apparatus and the NRL unit are roughly nine times more sensitive to A^{41} than Xe^{133}. This is one of the main reasons that in spite

1119981

of the much stronger Xe^{133} source in curies in comparison with A^{41} (factor of the order of 50) it was still only detected about three to four times the distance from the source. While it is seen that the sensitivity of the NRL unit and the conductivity apparatus for Xe^{133} are about the same, the conductivity apparatus is still able to detect smaller amounts because of less background variation.

Background

By background is meant the normal response of the instrument to radiations normally present. In the following table is given the background and an estimate of the percentage of contributing factors. The values given for the conductivity are taken from Hess.

Background Source On Ground	Pressure Chamber	NRL Unit	Conductivity Apparatus
Cosmic	70%	40%	16%
Aircraft and inherent background	10%	20%	negligible
Ra and Th products in air	4%	8%	51%
Ra and Th products in soil	16%	32%	33%
Total Background	145 Div.	50 Div.	15 Div.

1119982

These values refer to air near the ground, at higher altitudes one would expect the component from the soil to fall off rapidly, the component free the radium and thorium products in the air to drop off more gradually, and the component due to cosmic rays to become larger. Curves showing the variation of background with altitude will be shown later. The background components due to Ra and Th products in air and in the soil would vary considerable with different locations and also from day to day.

The variation of the background is important in that it determines the smallest amount of detectable radiation. In the case of the conductivity, the variation of the smoke and fog content will affect this. On a clear day in the open country or at high altitudes this variation will be smaller. An estimate of the average fluctuations of the background of the instruments used is as follows:

Pressure Chamber	15 divisions
NRL Unit	5 divisions
Conductivity Apparatus	3 divisions

1119983

Altitude Effect

The increase of background response with altitude up to 15,000 feet is shown on page 67. The vertical scale is in arbitrary units and does not indicate the relative background of the instruments. It is seen that the instruments all follow a similar curve, showing an increase in background with altitude. The drop in the background ionization shown for the conductivity below 5,000 feet is probably due to the presence of smoke or haze rather than a decrease of radiation. The curve showing the background of the El-tronics (the GM counter used for the counting of filters on the plane) points out the necessity of obtaining the background count at the same altitude at which the filter count is obtained.

The T-C and C curves are total minus coincidence counting rate and coincident counting rate respectively of the NRL unit. The following relation given by Gager, Jensen and Zettle* should hold:

$$(T-C) = B_o + B + k(C)$$

---

* F.M. Gager, G.K. Jensen and E.N. Zettle, Airborne Dual-Channel Radiation Detection System NRL Report P-3339

1119984

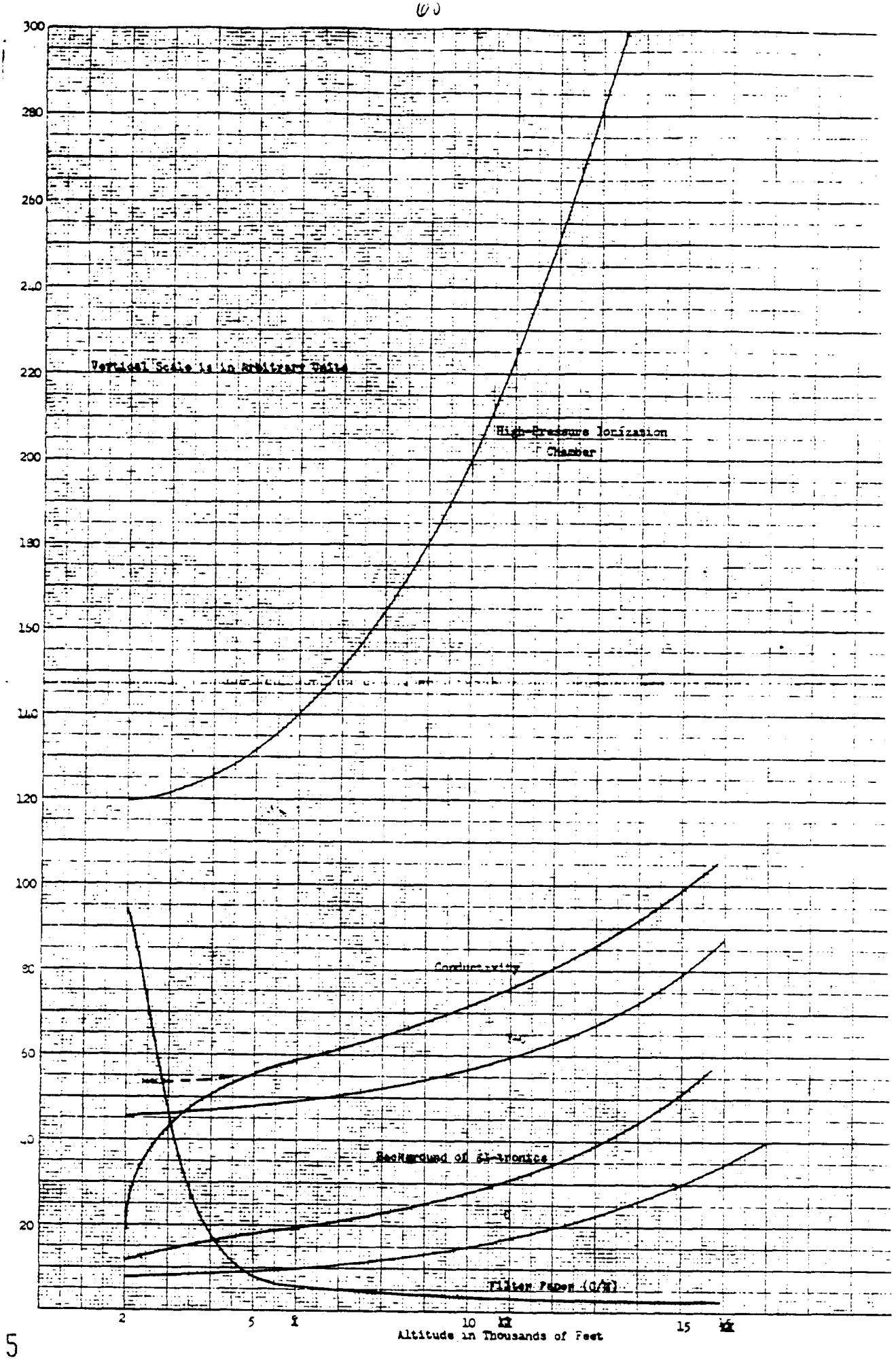
300
280
260
240
220
200
180
160
140
120
100
80
60
40
20
Vertical Scale is in Arbitrary Units
High-Pressure Ionization Chamber
Conductivity
Background of Electronics
Filter Paper (G/M)
2
5
10
15
Altitude in Thousands of Feet

1119985

where

(T-C) = total minus coincident counting rate

B_o = ground contribution

B = aircraft and inherent counter background contribution

k = slope constant

They found for actual counting rates the value 0-9 for k. For the curves given, the sensitivity of the rate meters for the two counting rates are different, thereby giving a different value for k.

The curve showing the activity of a filter paper collection with altitude is an indication of the relative amounts of radon with altitude. The collections were made for periods of one-half hour and counted for 6.4 minutes starting one minute after filter removal from collector box. The radon originates from the soil so one would expect a decrease in radon concentration with altitude due to the decay of the radon as it is carried up by diffusion and convection. The height of the atmospheric temperature inversion at the time the data was

1119986

taken was 3500 feet and is seen to fit at the break in the slope of the curve. This is to be expected from the known meteorological characteristics of a temperature inversion which prevents vertical mixing.

Zero Drift

The only instrument used that showed any appreciable drift was the air conductivity unit. In this apparatus using the electrometer tube as described earlier, the average drift was approximately one percent of full scale per hour. While this amount of drift is not too objectionable we have now replaced the electrometer tube with vibrating condenser type of electrometer which shows negligible drift.

Time Constant

A measure of the speed of response of an instrument to a sudden change in radiation is the time constant. We may define the time constant in several ways. In the simplified circuit of charging a condenser with capacity C through a resistance R by a voltage V, the usual definition defines RC as the time constant; this interval of time, however, only charges the condenser to .63V. We shall refer to the time constant in this

1119987

manner as the RC constant. The time required to bring the response to 90% of its equilibrium value is sometimes used as a definition for time constant. For the condenser resistor combination the time required for the condenser to reach .9V would be 2.3 RC.

The RC constant for the conductivity apparatus is approximately 0.1 second for the high sensitivity setting. However, the time required for the pen of the Brown recorder to travel full scale was 4½ seconds.

The tank circuit of the NRL detector has a RC constant of 10 seconds so that the 90% response time would be 23 seconds. This agreed with experimental observation.

The experimental 90% response time observed for the pressure ionization chamber was 55 seconds when used at high sensitivity indicating this instrument as the slowest of the three.

Ruggedness and Reliability

All three instruments were considered equally rugged and free from effects due to vibration. The NRL unit required the most maintenance, though the amount of maintenance was not

1119988

considered objectionable. The unit required the aircraft engines to be operating to maintain sufficient line voltage. Further improvements of the additional NRL unit built by Lt. Harlan shown on page 44, is in process. The new unit has been combined in one chassis and now operates from 110 AC power source. The conductivity unit required a drying out time from 5 to 15 minutes to remove accumulated moisture before stable operation if the apparatus had been standing idle during a rain storm. The high pressure ionization chamber has required no maintenance whatever from the time of installation to the time of writing this report.

Simplicity

The air conductivity apparatus is the simplest to construct and the least expensive if used with the electrometer tube circuit. Vibrating reed electrometers if used, on the other hand, are relatively expensive.

The NRL detector is a more complicated circuit but if the components are available, they are easy to assemble.

The high pressure ionization chamber requires skilled personnel to fabricate and combined with the vibrating reed electrometer, it is expensive.

1119989

Filter Collection

A comparison of filter collection as a detection instrument with the preceding three instruments discussed, was tried. Unfortunately, at the time of the collection, the sources of radioactivity were all equipped with filters rendering the aircraft filter collection ineffective. A comparison is expected to be made at a later date in the Hanford area with the source filters removed.

The collection of particulate matter on filter paper as a detection instrument has a high sensitivity due to its accumulative property. It has the disadvantage of not giving an instantaneous result but a result integrated over the time of collection.

The methods of determining amounts of activity on the filter used were (1) counting by wrapping the filter around a Radiation Laboratory GM beta counter and the count registered on an El-tronics scaler and (2) taking a radioautograph of the filter on X-ray film for from several days up to a week. The radioautograph method is the more sensitive and also shows where the active particles are located on the filter in case separation of the particles is desired for further study. The radioautograph has the disadvantage of being time consuming. A third method

that can be used and which is probably the most sensitive is to dissolve the active particles and precipitate the sample on a small foil so that it can be counted with a low background counter with high efficiency. This method, of course, is also time consuming.

The efficiency of the filter in capturing the particulate material from the air flowing through the filter is a factor that must be considered. If the efficiency is low, methods of raising this should be considered such as treating the filter with caustic to increase the efficiency of collecting I^{131}. Such methods were not tried, but personnel from the Hanford area did not recommend the treatment.

The decay of the activity is a consideration in filter collection. The radium decay products have a half life of the order of 30 minutes, while Th B has a half life of 10.5 hours. For high sensitivity to a long life product, one must wait until ThB has decayed which means several days. This would be true also in the case of radioautograph methods. The decay of the particulate matter from a dissolving run of 5 day old slugs at Oak Ridge is shown on page 75. The decay shown is probably a combination of 12.8 day Ba^{140} and 54 day Sr^{89}.

1119991

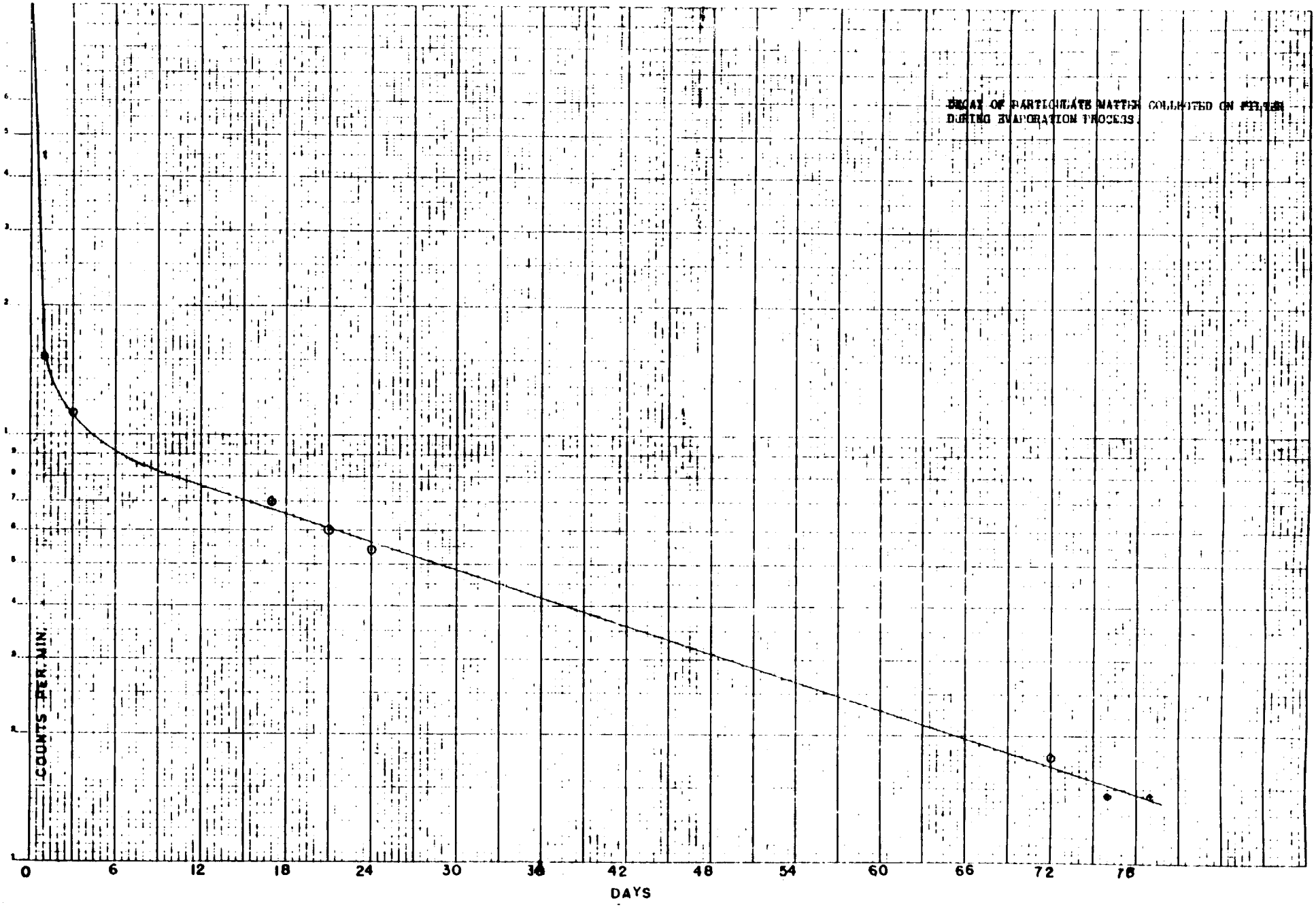
DECAY OF PARTICULATE MATTER COLLECTED ON FILTER
DURING EVAPORATION PROCESS.
COUNTS PER MIN.
DAYS
0
6
12
18
24
30
36
42
48
54
60
66
72
78

1119992

Recommendations

In conclusion, the following recommendations are offered:

1. That the High Pressure Ionization Chamber be eliminated from the group of instruments used in future air-borne detection work. Although its high sensitivity is a great attribute, this sensitivity is gained through use of high-value resistors which also introduce a long time constant. Because of this time constant, it is difficult to assign a geographical location to narrow areas of radioactivity in the air.

2. That more consideration be given to a combination of the two instruments - the conductivity apparatus and the NRL Detection unit. Although the Conductivity apparatus has bad features, mainly, its response to smoke and moisture in the air, it is a very desirable instrument because of its high sensitivity and fast response. The NRL unit is reliable, of good sensitivity, and is not affected by changing atmospheric conditions. A comparison of the records of the two instruments used simultaneously would give a relatively good picture of the radioactive content of the air under any flight condition.

1119993

3. The continued use of filters in conjunction with the above instruments is recommended. This is the only real means of determining the presence of long-lived particles and in cases of unfiltered sources, this particulate matter may be detected at extremely long ranges.

1119994

FILTER EFFICIENCY

by

Francis J. Davis

Health Physics Division

Oak Ridge National Laboratory

Introduction

To estimate amounts of natural radioactive material in the atmosphere, one may use filters to collect the particulate material and count the beta or alpha emission at intervals to establish the decay curve. The decay curve, however, establishes only the relative amounts of the active material; and a calibration of the filter paper to obtain an efficiency of collection must be had before the absolute amounts of radioactive material in the air can be estimated. The efficiency of filter paper is a function of particle size, and therefore any efficiency value necessarily refers to a certain distribution in particle size. Thus the efficiency measurements given do not hold for distributions of particulate material other than that specified.

Method

Beta and alpha radiation from the material collected on the filter paper was measured, and the results were compared to the theoretical amount of active deposit in the air. It was

1119995

assumed that the radon in the air and its active deposit are in radioactive equilibrium. This procedure entails a measurement of the radon content of the air, the counting of the filter for alpha and beta radiation, and a determination of the air flow through the paper.

Description

The filter box was described earlier under the instrument section. Using information from data obtained at Wright Field, one can estimate the air-flow through the filter by noting the pressure drop across the filter indicated by a differential manometer. The usual airflow is approximately 450 cu ft/min. The filter is type CWS #5 with dimensions 8" x 18" or one square foot in area.

The alpha counter was apparatus designed by the Oak Ridge National Laboratory. It consists of a cylindrical counting chamber in which the filters to be counted were placed, a high gain amplifier and an Atomic Instrument scaler. Argon from a high pressure cylinder was flushed through the counting chamber while the count was being made.

The beta counter apparatus consisted of an El-tronics, Inc. scaler plus a Radiation Counter Laboratories GM tube. The GM tube used was 24" long by 2" in diameter with an effective length of 18".

1119996

The radon determination was made in a laboratory at Oak Ridge National Laboratory by Miss Sarah Culpepper. Two-liter glass sampling flasks were filled during flight and the air was transferred in this manner to the Laboratory. Here the sample went through a purification system for the removal of oxygen and water vapor from the air sample while transferring it to an alpha particle counting chamber. The alpha count from the sample was then compared with that from a radon standard furnished by the National Bureau of Standards. The alpha amplifier and scaler in the laboratory were similar to those used on the plane.

Procedure

A typical procedure record is as follows:

Date 2-1-49

Altitude of atmospheric temperature inversion 3000'

Time		
0 00^m00^s	Filter in place	
	Indicated altitude	2000'
	Pressure drop across filter	6.4"
0 15	Air sample taken	
0 20 00	Background started	
0 26 24	Background completed	
	Background count/min	749

0 30 00	Filter taken out	
0 31 00	Beta count started	
0 37 24	Beta count completed	
	Beta count/min plus background	7011
	Net beta count/min	6262
0 40 00	Alpha count started	
0 46 24	Alpha count completed	
	Alpha count/min	14441
	Air flow	495 CFM
	Radon content of air sample	3.85×10^{-12} curies/ft^3

The background count of the alpha counting chamber was so low that it could be neglected.

Theory

Assume as in the sample shown above a collection time $t_1 = 30$ min, a decay time $t_2 = 10$ min and a counting time $t_3 = 6.4$ min. In the theory of successive radioactive transformations* it is shown that the activity of RaC which was in equilibrium with a constant supply of Rn and removed from the Rn for a time t is equal to

$$C_t = (A\, e^{-\lambda_1 t} + B e^{-\lambda_2 t} + C e^{-\lambda_3 t}) C_E$$

* Rutherford, Chadwick and Ellis - "Radiation From Radioactive Substances"

where λ_1 is the decay constant for RaA = .2268/min

λ_2 is the decay constant for RaB = .02586/min

λ_3 is the decay constant for RaC = .03516/min

$$A = \frac{\lambda_2 \lambda_3}{(\lambda_2 - \lambda_1)(\lambda_3 - \lambda_1)} = .0236$$

$$B = \frac{\lambda_1 \lambda_3}{(\lambda_1 - \lambda_2)(\lambda_3 - \lambda_2)} = 4.267$$

$$C = \frac{\lambda_1 \lambda_2}{(\lambda_1 - \lambda_3)(\lambda_2 - \lambda_3)} = -3.291$$

Integrating the last equation to obtain the accumulated activity at the end of the collection time t_1.

$$C_{t_1} = \int_0^{t_1} C_t dt = A\left(\frac{1 - e^{-\lambda_1 t_1}}{\lambda_1}\right) + B\left(\frac{1 - e^{-\lambda_2 t_1}}{\lambda_2}\right) + C\left(\frac{1 - e^{-\lambda_3 t_1}}{\lambda_3}\right)$$

After collection time t_1 and a decay period t_2 we have

$$C_{t_1 t_2} = \int_{t_1}^{t_1 + t_2} C_t dt = A\left(\frac{1 - e^{-\lambda_1 t_1}}{\lambda_1}\right) e^{-\lambda_1 t_2} + B\left(\frac{1 - e^{-\lambda_2 t_1}}{\lambda_2}\right) e^{-\lambda_2 t_2}$$

$$+ C\left(\frac{1 - e^{-\lambda_3 t_1}}{\lambda_3}\right) e^{-\lambda_3 t_2}$$

The average count per minute during a counting period t_3 after a collection period t_1 and decay period t_2 is then equal to

1119999

$$C_{t_1t_2t_3} = \frac{1}{t_3} \int_{t_2}^{t_3+t_2} C_{t_1t_2}dt_2 = A\left(\frac{1 - e^{-\lambda_1 t_1}}{\lambda_1}\right)e^{-\lambda_1 t_2}\left(\frac{1 - e^{-\lambda_1 t_3}}{\lambda_1 t_3}\right) +$$

$$B\left(\frac{1 - e^{-\lambda_2 t_1}}{\lambda_2}\right)e^{-\lambda_2 t_2}\left(\frac{1 - e^{-\lambda_2 t_3}}{\lambda_2 t_3}\right) + C\left(\frac{1 - e^{-\lambda_3 t_1}}{\lambda_3}\right)$$

$$e^{-\lambda_3 t_2}\left(\frac{1 - e^{-\lambda_3 t_3}}{\lambda_3 t_3}\right)$$

when t_1 = 30 min, t_2 = 10 min and t_3 = 6.4 min.

$$C_{t_1t_2t_3} = 24.98$$

In the above sample if we had 100% counting efficiency, we should get an alpha count assuming a geometry equal to 1/2 and 2.2×10^{12} disintegrations per min per curie equal to

$$(495)(3.85 \times 10^{-12})(24.98)(2.2 \times 10^{12})(1/2) = 5.17 \times 10^4 \text{ d/min}$$

Using the alpha count obtained we get for the efficiency of the collection

$$\frac{14441}{5.17 \times 10^4} = 28\%$$

The equation for the activity of RaB can be derived in the same manner resulting in

$$B_{t_1t_2t_3} = \frac{\lambda_1}{\lambda_1 - \lambda_2}\left(\frac{1 - e^{-\lambda_2 t_1}}{\lambda_2 t_1}\right) e^{-\lambda_2 t_2}\left(\frac{1 - e^{-\lambda_2 t_3}}{\lambda_2 t_3}\right) -$$

$$\frac{\lambda_2}{\lambda_1 - \lambda_2}\left(\frac{1 - e^{-\lambda_1 t_1}}{\lambda_1 t_1}\right)\left(e^{-\lambda_1 t_2}\right)\left(\frac{1 - e^{-\lambda_1 t_3}}{\lambda_1 t_3}\right)$$

RaB, however is only a beta emitter and therefore, does not enter into the alpha count. The energy of the beta emitter is only 0.65 mev. To estimate the fraction of RaB beta rays that are absorbed in the counter wall we may use the equation

$$F = 1 - e^{-\mu x} \text{ where } \mu = 18E^{-1.46}$$

E is the energy of the beta ray emitted in mev and x is the wall thickness in gm/cm^2. For the counter used, the wall thickness is approximately 0.100 gm/cm^2 so that the fraction of RaB beta rays absorbed in the wall is about 97%. The value F for RaC beta rays absorbed in the wall using 23% of the beta rays with energy 3.17 mev and 77% at 1.65 mev becomes 51%.

Assuming a calculated geometry for counting beta rays as 37% and wall absorption of 50%, the ratio of alpha rays to beta rays counted for the same collection of active material becomes 2.7. In actual practice, the ratio after correction for decay between the separate countings turns out to be between 2.5 and

2.6. Undoubtedly some of the alpha particles are absorved in the filter paper.

Results

A summary of the data taken appears in the following table:

Date	Indicated Altitude	Height of Inversion	Curies of Rn per $ft^3 \times 10^{12}$	Collection Efficiency From Alpha Count
1-27-49	2500	2800	3.0	12%
2-1-49	2000	3000	2.8	28
2-1-49	4000	3000	1.8	28.8
2-2-49	2000	2500	3.1	30.4
2-2-49	4000	2500	1.5	40.1
2-8-49	7000	3000	.65	31.2
			Average	28.4%

The results shown are seen to have considerable variation. Probably the greatest source of error is in the measurement of the radon concentration of the air. Several other methods were tried, such as concentration of the radon by adsorption on charcoal; but this method failed due to natural contamination of the charcoal. Larger samples, using polyethylene balloons, were tried; in this case, however, the adsorption of the radon by the balloon material was too large and variable. The first determination listed was by

the balloon method and is seen to be the value furthest from the mean. The values of radon concentration, therefore, have a probable error of about $\pm$ 10%.

1120003

ORNL

PART II

METEOROLOGICAL INFLUENCE
ON
AIRBORNE RADIOACTIVE CONTAMINATION

1120004

I. Introduction:

On 17 November 1948 flight operations were begun in the Oak Ridge area in order to make comparison tests of airborne detection instruments. These flights were without precedent, and there was no previous knowledge on which to estimate the success with which airborne instruments might respond to the radioactive gases released during routine manufacturing operations at an atomic plant. Nevertheless, in planning for these first flights it was recognized that some meteorological assistance would be required for successful completion of the project. For this reason, Lt. Robert Kane, a meteorologist, was assigned as co-pilot aboard the project aircraft. Also, the U.S. Weather Bureau representative with the AEC Administration at Oak Ridge, Mr. Joshua Holland, was informed of the meteorological nature of the project and by means of an informal arrangement was asked to assist the project personnel whenever possible. As the object of the first flights was simply to fly into the radioactive gases emitted from stacks at X-10 in order that the responses of the instruments might be noted, it was thought that the meteorological requirements of the project were adequately taken care of. Later, as the project progressed, the meteorological program was considerably amplified so that the relationship between meteorological

conditions and the concentration of radioactive materials might be studied. The growth of the meteorological phase of the project is discussed below.

During these first flights only the cooling air from the pile, essentially all argon, was available as a source of radioactivity. Because of the short half-life of the radioactive argon (110 minutes) it was not expected that it would be detectable beyond a few miles. To actuate the instruments, flights were made within sight of and directly over the stacks. The instrument records obtained on the four flights prior to 2 December 1948 merely showed efforts to adjust different components of the instruments and were of no permanent value. Actually, the first three flights were conducted just outside of the Oak Ridge prohibited area because permission had not yet been granted for the aircraft to fly over this controlled zone.

On 2 December, members visited the project and were passengers aboard the project airplane during a demonstration flight over the X-10 area. This flight showed that the instruments being tested were responding successfully and that further work with the instruments was justified. After the flight, an informal

conference was held at which it was decided that a more extensive use should be made of meteorological techniques in flight planning and that the data collected during the instrument tests be used for furthering the study of the diffusion processes in the atmosphere. This decision was in part influenced by consultation with Weather Bureau representative at Oak Ridge.

The responsibility for this project was assigned to the U.S. Weather Bureau, and Paul Humphrey of the Special Scientific Services Division of the U.S. Weather Bureau was designated as a second meteorologist to the project. Mr. Humphrey was to report to Oak Ridge prior to 1 January 1949, the date when a dissolving operation was tentatively scheduled. In order to begin planning for this operation, he reported on 28 December; however, the dissolving was postponed until 11 January 1949.

Meteorological work associated with this project may be divided for the purpose of discussion into three different phases. The first phase consisted of work done at Oak Ridge with respect to the flights from 17 November through 31 December 1948 when initial adjustments were being made on the instruments.

1120007

The second phase began with the assignment of the second meteorologist to the project and was concerned with the remainder of the flights at Oak Ridge. The third phase was concerned with the flights made at the Hanford Works. In this report each of these three phases will be discussed separately. The meteorological requirements of the first phase of operation will be mentioned briefly when the more intensive meteorological efforts made at Oak Ridge and Hanford will be discussed in detail. The order of discussion will be as follows: First, the type of flights made and the meteorological requirements for each type will be explained. These explanations will be followed by a mentioning of the local geographic and meteorological characteristics of the regions which affected the flights. The meteorological facilities available at Oak Ridge and at Hanford will then be described with reference to flight planning and post flight analysis. After the facilities are described, a discussion of some of the meteorological problems of actual flights will be given and the most successful flights will be described in detail. Finally, conclusions and recommendations based on all of the meteorological work done will be presented.

1120008

II. First Phase - Preliminary Flights over the Oak Ridge, Tennessee, Area

A. Meteorological Requirements:

1. For Safe Flight:

The first instrument comparison flights required merely suitable ceiling and visibility conditions. It was necessary that the airplane fly easily and safely between the lowest clouds and the tops of the hills in the Oak Ridge area and that the air to ground visibility be good. An important accomplishment of the first few flights was the familiarization of the flight personnel with the appearance of the operational area from the air. Maps showing locations of plant buildings were not available so that it was necessary to learn the relative positions of important land marks by visual observation. All flights were in daylight for optimum visual observation conditions.

2. For Successful Instrumentation:

As the early tests progressed, it was found that the instruments themselves imposed additional meteorological requirements. The air conductivity instrument responds to large

1120009

amounts of moisture such as is found within clouds or in rain areas and gives erroneous readings when such regions of moisture are traversed. Therefore, flights were not intentionally scheduled which were likely to encounter such conditions.

B. Meteorological Planning:

Just prior to take-off on the first flights, the U.S. Weather Bureau airport station at McGhee Tyson Field, Knoxville, was visited; and from the local weather, the probable flying conditions for approximately the next three hours were estimated. Also from the Weather Bureau Office, the latest upper wind sounding for Knoxville was copied and the surface and upper wind charts were examined in order to estimate the most probable direction of air flow over the X-10 area. It was assumed that the cooling air from the pile would behave similar to smoke and would be affected by the same meteorological conditions which would affect smoke. That is, the cooling air would gradually mix with the atmosphere and move with the local air currents. It also would be prevented from diffusing upward if trapped below a well defined temperature inversion. Therefore, the first flights were planned so as to encounter the radioactive gases just downwind from the stack or to cross the

stack in a downwind or upwind direction. Passes directly over the stack would be certain to take the airplane through the radioactive gas; and if proper altitudes and flight directions were chosen, instrument returns could be expected for at least several miles.

C. Actual Flight Operation:

The upper wind data obtained at the U.S. Weather Bureau airport station gave some indication of how the flight should be conducted, but soon it was discovered that the observations made at the airport were not reliable indications of the local conditions at X-10. The behavior of ordinary coal smoke from a power plant within the X-10 area was one of the best indications of the atmospheric conditions affecting the radioactive gases. Other sources of ordinary smoke in the Oak Ridge area were also useful. In early flights, the behavior of the smoke was observed upon arrival over X-10 and the most probable location of the radioactive gases were thereby estimated. The use of ordinary smoke from nearby stacks as a guide is not recommended since it is possible for the smoke and the radioactive gases to travel in entirely different directions and at different altitudes. Differences in behavior are caused by differences in location, heights of stack, upward velocities

at the tops of the stack, initial temperatures after emission, etc. However, the use of smoke was more reliable than estimates based on meteorological observations outside of the area.

D. Results:

Although considerable useful work was done on the instruments, detection was not accomplished during the first phase of the project beyond a few miles. This was because of the short half-life of the radioactive argon and the difficultiles encountered in directing the aircraft from the data available.

E. Analysis and Documentation:

Since the instruments were being constantly adjusted, no records were obtained which could be sufficiently correlated with local meteorological to be of permanent value. No effort has been made to document this phase of the project beyond what has been given here.

III. Second Phase, Major Effort at Oak Ridge

A. Types of Flights Made:

Four different types of flights for scientific purposes were made by the project aircraft. The purposes of these flights were as follows: (1) Instrument adjustment and comparison using the cooling gases of the pile as a radioactive source. (2) Radioactive particle detection over the plant area by means of filters. (3) Determination of the efficiency of filters by the collecting of natural radon. (4) Detection at a maximum distance of the radioactive gases from a dissolving operation.

1. Instrument Adjustment and Comparison:

If the purpose of the flight was the first given above, that is, if the object of such a flight was merely to expose the instruments to an airborne radioactive source, only a moderate meteorological effort was made. Although some attempts were made to track the radioactive argon downwind, detection at a distance greater than five or ten miles was not expected from this type of flight. Since the aircraft was usually within sight of the plant stacks, good flying weather (without precipitation) and a general knowledge of the winds were practically the only meteorological requirements.

2. Particle Detection:

If the purpose of the flight was the second given above, that is, if the object of the flight was to collect any microscopic particles which might be present over the plant as a result of the dissolving and evaporation operation, the meteorological requirements were even less than before. Even a general knowledge of the local winds was not important. The aircraft merely flew to the plant area and made very short passes at the lowest practical altitude over or very near the stacks. Since this low level flying could be best conducted up and down the valley, flight tracks were parallel to the ridges regardless of the wind direction.

3. Determination of Filter Efficiency:

If the purpose of the flight was the third given above, that is, the determination of the efficiency of filters by the collection of natural radon, there also were few meteorological requirements. Since in this type of flight it did not matter over what area the radon was collected providing the area was upwind or well to one side of Oak Ridge, the only meteorological requriement was that the general wind direction

be known and that average or better flying weather, without precipitation, prevail. An effort was made to correlate the amount of radon with the air mass present, the prevailing wind, and the temperature lapse rate, but too few flights were made for any conclusion to be reached. The filter efficiency flights were important from the standpoint that they gave better understanding of the readings of the other instruments, but these flights did not contribute directly to the problem of atomic plant detection. As no particular flight pattern was required, it was not necessary that a meteorologist be aboard the aircraft.

4. Detection:

By far the most important type of flight from a meteorological standpoint was the type of flight which had as its purpose the fourth, and last given above. That is, the type of flight which was flown for the detection at the greatest possible distance the gases from the dissolving operation. Before experience was gained it was not known how far the instruments would detect the radioactive gases. There was no reason for not believing that detection operations might be carried on to 50 or 100 miles, or even further, from the source. There-

1120015

fore, initial planning for a meteorological program it was necessary to consider the possibilities of both short flights within a few miles of the source and long flights out to a distance of several hundred miles. Actually, flights were never extended beyond thirty miles from the plant site, but meteorological effort provided for longer flights if they became possible. The greatest part of this meteorological report is concerned with efforts made as part of the long range detection operation. In describing the detection of the dissolving gases all of the meteorological considerations of atomic plant detection as they pertain to Oak Ridge will be covered in the parts of the report which follow.

B. Geographic Features of Area

1. Airport

The nearest airport at which the aircraft could be based was McGhee Tyson Field, Knoxville, which was approximately 18 miles east-southeast of the plant area. The location of the airport relative to the X-10 area was important from a meteorological standpoint as the weather observations and forecasts made at the airport had to be applied to the X-10 area. Also, it was necessary to consider flying weather at the air-

1120016

port and on the route between the airport and Oak Ridge. In ordinary meteorological problems the differences between weather conditions at two points only 18 miles apart are not given much consideration; however, on this project the differences in the conditions at the airport and at X-10 were very significant. On mornings when ground fog occurred, it was found that fog might be present at the airport but not at X-10, and vice versa. Also, on one flight it was necessary to return to the airport because of a light drizzle from low clouds over Oak Ridge. This was surprising as there was no indication at the airport that this drizzle should be expected. No precipitation had occurred recently at the airport or did occur that day. Of greatest importance, however, were the differences in wind directions and velocities up to about 2000 feet above the surface. For example, data from two soundings made at approximately the same time on the morning of 11 January at the Knoxville airport and at X-10 showed that over X-10 the winds at the 2000 feet level were light, but definitely easterly; whereas the wind at the same altitude over the airport was northwesterly about 4 knots. Whenever a certain type of weather observation was available from the X-10 area, observations of the same type from the airport were almost entirely disregarded.

1120017

2. Operational Area in General

Oak Ridge is situated just to the west of the center line running northeast-southwest through the forty mile wide valley which exists between the Cumberland and the Smoky Mountains. The city of Knoxville is near the center of the valley and the airport is to the east of the center line about half way between the city of Knoxville and the lower mountain ridges of the Smokies. In the center of the valley, around Knoxville, and from the airport to near Oak Ridge, the land is rolling and without definite form. The tops of the hills are about 1000 feet mean sea level (M.S.L.) and the bottoms of the valleys are about 700 or 800 feet. On the eastern side of the big valley between the Cumberlands and the Smokies, in the region where the flight operations of this project were conducted, the hills take the form of a series of ridges which in some respects may be considered to be the foothills of the Cumberlands. These ridges are parallel to a remarkable degree, and some of them extend for ten miles or more without a break. When breaks do occur, they are caused by a river or small stream which has cut through what would otherwise have been a continuous ridge. The valleys between the ridges are long troughs in which under stable conditions

1120018

the air flow from one valley to another is likely to take place only where the ridges have been cut through. The fact that the ridges which extend the Oak Ridge area were crossed at nearly a right angle by the Clinch River at both the north and south boundries of the prohibited zone was an important consideration when conducting flights for this project. The valley of the Clinch River formed a passage way through the ridges approximately ten miles northeast of the X-10 stacks and another passage about five miles to the southwest. Another passageway, except that it was broader, was afforded by the Tennessee River approximately eleven miles southwest.

3. X-10 Area:

X-10, including the pile and the two stacks emitting the radioactive gases, is located in one of the long valleys between a pair of parallel ridges such as are described above. This valley is named Bethel Valley. From ridge top to ridge top, it is about a mile wide. At the plant site the floor of the valley is 774 feet. The bases of the stacks are on a slight rise at 860 feet; and since the stacks are exactly 200 feet high, their tops are at 1060 feet. All elevations are feet above mean sea level. The higher elevations of the ridges on each side of the valley range from about 1100 feet

1120019

to about 1300 feet. This means that tops of the stacks are just below the tops of the ridges. Under ordinary conditions, the smoke or gases which come out of the stacks rise an additional one or two hundred feet to just about the highest elevations of the ridges. The ridge on the eastern side of the valley is broken just opposite the plant site. Here the ridge has been cut through by a small stream named White Oak Creek. This break in the ridge affords a convenient outlet for air from X-10 to drain out of Bethel Valley.

C. Meteorological Characteristics of Region During the Time Flights Were Conducted

It was not possible during this project to do much more than begin a study of the meteorological characteristics of the Oak Ridge area. No previous history of upper air conditions is available for the locality. Some surface data for Oak Ridge is available, but since meteorological conditions above the surface were of primary importance in this project almost no work was done with the surface observational data. There are no records of local conditions which can be correlated with daily meteorological charts so that forecasts of upper winds or temperature lapse rates could be made satisfactorily. The U.S. Weather Bureau observational

program at Oak Ridge is in its early stages and no series of observational records suitable for analysis has yet been obtained. It would have aided this project considerably if historical data had been available whereby forecasts of the winds and the temperature lapse rates could have been made for the periods that flights were conducted. Such meteorological information as was learned with regard to the significant characteristics of the local area were learned primarily by personal observation during the course of the project. However, only a limited number of meteorological situations were experienced. Flights were usually in the middle of the morning when flying conditions were favorable. No experience was gained with meteorological conditions in the late afternoon or at night, or with conditions associated with adverse flying weather.

Probably the most important meteorological characteristic observed is that there is a tendency for winds to blow parallel to the ridges. Because of the Cumberland and Smoky Mountains on each side of the valley in which Knoxville and Oak Ridge are located, winds either from the southwest or the northeast are the most frequent. Winds from these directions

are also of higher velocity. This channeling effect of the ridges on the wind is even more pronounced in the smaller valleys such as Bethel Valley. Frequently at night, conditions are very stable and nearly calm conditions prevail below the ridge tops. Surface heat is radiated from the valley floor and the sides of the ridges and a layer of cooler air is produced which flows down the sides of the hills and into the valley. This produces a strong temperature inversion and a light wind parallel to the ridges as the air flows down the valley seeking the lowest elevation. If there is a break in the ridge where a stream or river has cut through, there is a tendency for the air to flow through this break. By the middle of the morning, when surface heating from the sun becomes effective, convective processes begin; and the temperature inversion is eliminated along with all of the features of stable conditions.

On the morning of 11 January such a stable condition occurred. On that date, westerly winds prevailed above the top of the surface inversion; whereas very light winds, either calm or parallel to the ridges prevailed underneath.

The ordinary smokes in the Oak Ridge area, as well as the maximum concentration of radioactive gases from the dissolving processes, were contained at just about the inversion level, or below, as long as the inversion was effective; and the general flow was down Bethel Valley toward the southwest. Toward mid morning, after heating had eliminated the inversion, convective processes began; and the westerly winds which had previously been above the inversion quickly worked down into the valleys. Within a few minutes, the gases and smokes which had been concentrated below the inversion were mixed with the upper winds and rapid dilution of the radioactive gases is likely to have occurred.

The effects of temperature inversions were studied by watching the behavior of ordinary smokes whenever an opportunity presented itself. On some mornings a good source of smoke such as a coal burning power plant would produce a layer of smoke which would extend for five miles or more. Such smoke was almost always concentrated just above the ridge tops until it was dispersed as the inversion was eliminated. Although the radioactive gases were invisible, it was assumed that their behavior would be comparable to the smoke. Therefore, flights

1120023

which were to register maximum activity were conducted in the morning while the surface inversion was effective; and the flight altitude selected was as low as as the tops of the ridges permitted.

D. Meteorological Facilities Available

The meteorological facilities available for flight operations over Oak Ridge were those at McGhee Tyson Field, Knoxville, and those maintained at Oak Ridge and available through the U.S. Weather Bureau representative with the A.E.C. administrators. Also use, of course, were the meteorological observational facilities of the project aircraft itself.

The U.S. Weather Bureau airport station has complete observing and forecasting facilities, with the exception that no radiosonde observations are made. The nearest radiosonde observations available were those at Nashville, Tennessee; Atlanta, Georgia; and Greensboro, North Carolina. It was found that these soundings were made too far away to be representative of the layer of air from the surface up to about 5,000 feet over the operational area; and that for this

project there was little use for the remainder of the soundings. Upper wind soundings are made at the airport four times daily, when weather permits. The latest upper wind sounding was consulted before flight time; and on at least one flight, up to date upper wind data from the airport was radioed to the airplane while it was over Oak Ridge. Except for landing or take-off conditions, surface observations made at the airport were almost of no importance as far as these flights were concerned.

During the time the flight operations of this project were being conducted over Oak Ridge, The U.S. Weather Bureau observational program for studying the local meteorological conditions associated with the discharge of radioactive gases from the stacks at X-10 was just beginning. Even though all of the Weather Bureau observation stations had not been installed, the Weather Bureau observers were able to furnish surface observations, upper wind soundings, and low level temperature soundings for the X-10 area. The Weather Bureau observation station is located in Bethel Valley, within a half-mile of the stacks. Special observations were made at this station to best serve the requirements of the flights. Before each flight a telephone call was made from the air-

port in order to obtain the local conditions in Bethel Valley. The Weather Bureau observer on duty reported the sky conditions, the surface wind, the latest upper wind sounding, the altimeter setting, and any other meteorological information worthy of note. Also, this observer reported on the behavior of the smoke coming out of the stack of the power house.

If another upper wind sounding was obtained at X-10 after the aircraft had left the airport, the sounding was telephoned to the airport weather office and then relayed via C.A.A. communications to the aircraft in flight.

On two flights the Weather Bureau observers were able to furnish a temperature sounding up to 600 feet, 100 feet below the flight level. A captive blimp was used in making these soundings. The blimp carried a resistance thermometer, and as it was raised and lowered on a cable the temperature was recorded at the surface.

At X-10, the Oak Ridge National Laboratory also was making meteorological observations on a routine basis during the period that flights were being made. They maintain an anemometer and wind vane on top of a water tower at the plant site. These instruments are at an elevation of 1027

1120026

feet M.S.L. Also on the tower are four resistance thermometers known as "thermohms" which are connected to a continuous recorder. These are at 33, 83, 133, and 183 feet. The wind data from the top of the water tower was useful for this project as it is a good indication of the initial behavior of the stack gases; but the thermohm data was not of particular value as the top of the inversions in Bethel Valley were always found to be above the highest thermohm.

Within the Oak Ridge area there were two other locations at which surface wind observations were made. One of these was within the town site and the other was at the gaseous diffusion plant (K-25). Wind data from these sites is available through the Weather Bureau Office in the A.E.C. administration building.

If future work of this nature is conducted at Oak Ridge, much more meteorological observational data will be available. A network of wind recording instruments is being established around the X-10 area and other efforts are being made by the Weather Bureau unit Oak Ridge in order to better understand the behavior of the air in Bethel Valley.

1120027

A very important meteorological observational tool available for this project was the project airplane itself. As a platform for visual observations it was unexcelled. Also, the airplane had a psychrometer aboard with which temperature and humidity measurements could be obtained. The aircraft psychrometer observations were the best method available for determining the characteristics of inversions.

For flight forecasts the airways forecaster at the airport was consulted and a verbal forecast was obtained. No attempt was made to develop or make use of forecast facilities beyond those normally available at the airport.

1120028

PROBLEMS OF ACTUAL FLIGHT OPERATIONS

1. Flight Plan Could Not Be Completed Prior to Take-Off

It was not feasible to prepare a fixed flight plan before an operation and to execute such a plan without change. When it desired that the purpose of the flight should be the tracing of the radioactivity as far as possible, only a very general flight plan was available at the time of take-off. Even under optimum conditions it was not known how long the flight would last, the altitudes to be flown, or the track which would be covered. Before the flight, the facts that were assumed to be true were usually whether or not air flow was up or down Bethel Valley and whether or not an inversion near the tops of the ridges could be expected. It was then necessary to procede to Bethel Valley to confirm these assumptions by visual observation of smoke and by psychrometer measurements. After take-off the air conductivity tube usually required drying out. This drying was accomplished by the passage of air through the tube as the airplane proceeded from the airport to the operational area. In almost every case the tests were begun by passes up and down the valley to determine the extent of the activity. Sometimes the air conductivity instrument did not completely dry out until one or more passes ha lready been made. Meanwhile, readings had been obtained

1120029

from the other instruments. However, actual instrument comparison tests began when all of the instruments were working satisfactorily. If any of the instruments needed adjustment, a number of passes through the stack gasses or random flight in an area clear of radioactivity might be required. Delay meant that the first run might begin either up or down the valley or might determine altitude of the first pass. Even though there might be an inversion present, the altitude of high activity relative to the height of the top of the inversion was not known. Some of the first passes were near the altitude where the top of the activity was thought to exist, whereas on other flights the first passes were made as low as safety considerations permitted. Depending on the instrument return received, the flight altitude was altered so as to determine the extent of the activity in vertical cross section, or the flight path would be shifted to one side of the valley or the other. If passes up and down the valley produced sufficient success a series of passes at right angles to the valley were performed at several altitudes. The overall flight pattern was determined by the interpretation of instrument responses, with considerations of meteorological conditions and flight safety. The meteorologist very frequently relayed

information between the personnel attending the instruments and the pilots. During each pass it was necessary to decide how far the pass should be continued and how the next pass should be flown. It was necessary to make quick recommendations and to decide with a minimum of consultation how each succeeding part of a flight should be conducted. On the ground, after some flights, it was not difficult to see how improvement could have been made in the flight plan if inflight planning had been based on information which was available but which could not be assimulated in the air because of insufficient time.

2. Flight Patterns Were Limited by Terrain:

A major problem was the fact that the types of patterns which were possible were determined by the terrain. Flights at a low enough level to pick up maximum of activity could only be conducted parallel to the ridges or across the ridges where they were broken by a river or a small stream. The Tennessee and Clinch Rivers afforded two passage ways to the south but only one good passage way was to the north where the Clinch River determined the north boundary of the Oak Ridge prohibited area. To the north of that boundary the ridges became considerably higher than near Oak Ridge, and the valleys

1120031

were not as easily defined. It was not considered safe to maintain an altitude approximately at the ridge tops northward of the Oak Ridge area.

3. Flight Patterns Were Limited by Populated Areas:

Another consideration which limited the type of flight pattern which could be flown was that it was not considered advisable to conduct low level flight over the city of Oak Ridge, or other similarly populated areas. If it appeared that a particular flight path was going to carry the airplane over a populated area, it was necessary to either increase the altitude or to take up a new heading. On at least one flight, when it became evident that a particular track was going to take the airplane across the city of Oak Ridge at a low altitude, the pass was interrupted; and no satisfactory substitute track could be determined while airborne.

4. Difficulties Associated With the Recording of the Location of the Airplane:

In this type of operation it is desirable that the position of the airplane be recorded at all times. It was thought that a map could be used in the air on which the track

of the airplane could be traced. This was found to be impracticable because of the speed of the aircraft and the difficulty of recognizing landmarks which could be spotted on a map. A map which is sufficiently detailed so as to have the necessary landmarks is too large to be conveniently used in the airplane. Also, such a procedure requires the constant attention of the person doing the tracing. If the tracing is interrupted for only a short time, it is difficult to relocate the position of the airplane. Another difficulty in tracing the position of the airplane on a map is that an airplane of this type does not have a suitable location for an observer. The position of the airplane could only approximately be determined by looking out of the side windows or out of the windows in the pilot's compartment. The actual method of locating the airplane was to fly a compass heading with respect to some landmark. This landmark, or fix, was usually the plant stack itself. A constant altitude, mean sea level, was flown, and the airspeed was kept at 150 miles per hour. The time that the airplane crossed a fix was recorded to within 10 seconds. It was very desirable that there be a record of the landmark at the beginning and end of a pass, but usually there was no landmark which could be designated either on a map or in the flight log.

F. Description of Typical Flight at Oak Ridge

Perhaps the best method of illustrating the techniques used in this project is to describe the most significant flight. The flight of 11 January has been chosen for detailed discussion here because it is representative of all others in procedure. Also, it was on this flight that activity was detected at the greatest distance from the stacks.

On 11 January the dissolving process commenced at 0400 E with the maximum activity occurring at 0500 E. The activity was one-half of maximum at 0600 E, one-fourth of maximum at 0700 E, and the activity continued to decrease until it reached zero at about 1800E.

Plans for the flight were made on the previous day. A strong surface inversion approximately 500 feet deep was anticipated to hold the radioactive gases in a stratified form somewhere between stack height of 1060 feet mean sea level (M.S.L.) and 1600 feet M.S.L. Therefore, it was planned to make the initial flights at 0400 E between these altitude levels. Very light winds from a northeasterly direction parallel to the terrain ridges were expected. After completion of an examination of the gaseous cloud below the inversion, plans called for a few traverses

above the inversion to determine, if possible, how much activity penetrated it. Following this, runs were planned perpendicular to the gaseous flow at increasing distances from the source until a distance was reached at which no further response could be received.

After this, it was planned to return to the airport and land at approximately 0530 E. After about three hours on the ground another flight would be effected in which the above procedure would be repeated. The three hour interval would permit the radioactive gases to be carried some distance downwind where an opportunity to measure limit of detection would be afforded.

Weather Bureau personnel at X-10 were to aid the effort by making in addition to pilot balloon soundings, a detailed temperature sounding up to 1350 feet M.S.L. by use of a captive blimp. This information was to be telephoned to the Knoxville airport; and if the project meteorologists were not there to receive it, the data was to be radioed to the airplane in flight.

All project personnel were at the Knoxville airport prepared for take-off at 0330 E. Unfortunately, adverse visibility conditions caused by thick ground fog, delayed take-off until 1042 E. Thus the flight was begun at a time when activity from

the stack had decreased to less than one-fourth of maximum. This delay in take-off cancelled all plans for the first phase of this operation. However, the delay did allow time for the gases of maximum activity to drift downwind where the second phase of the operation could be carried on.

A surface inversion whose top was at 1700 feet M.S.L. at take-off persisted throughout the flight although it lifted to 2000 feet M.S.L. and became very weak by the end of the period. The fog that delayed take-off was still scattered in patches over the Oak Ridge area early in the flight with tops at 1700 feet M.S.L., but it was entirely dissipated by 1100 E. During the remainder of the flight the sky was clear. Winds were from the northeast and parallel to the ranges of hills below the inversion, but the wind was nearly calm just above the inversion.

In the description of this one typical flight, copies of appropriate sections of the air conductivity instrument record will be shown and discussed. This instrument was chosen for this section of the report primarily because of its nearly instantaneous response. Comparison of the other instruments with the air conductivity instrument is made in another part of the report.

1120036

In all cases the records run chronologically from right to left. On each record (1) the direction of flight relative to the wind, (2) time over the stack, and (3) flight altitude above M.S.L. are denoted. In a few cases it will be noted that the instrument response drops suddenly to zero and then shortly afterward resumes as before. These changes in the record were made deliberately for timing purposes and have no further significance.

A flight log for this date is included in the appendix.

1120037

Drawing # 7075

ORNI

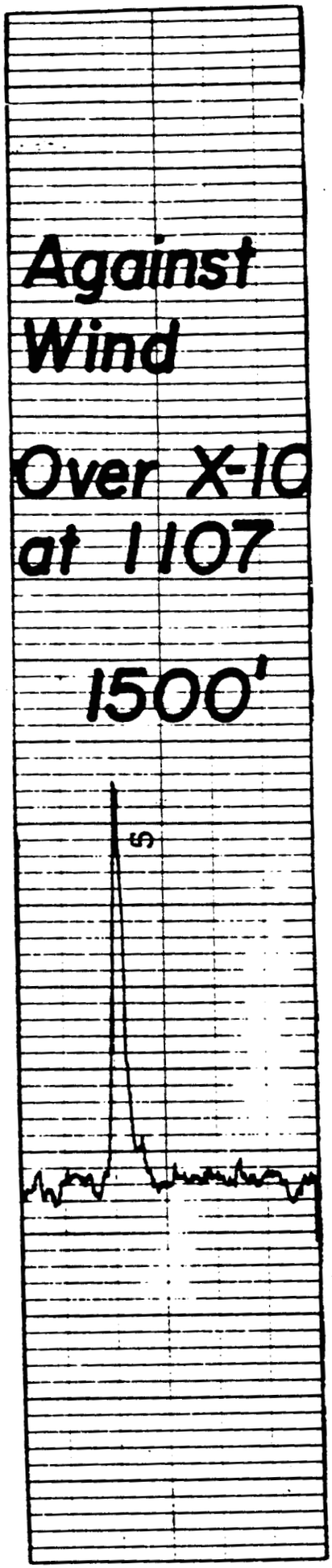

The first traverse, recorded here, was flown upwind to a point three miles beyond the stacks. The response returned to background immediately after passing stack and flight beyond three miles was deemed unnecessary. Later traverses showed that the first run was made, for the most part, just outside the gaseous trajectory which accounts for the lack of increases of return as the stack was approached. Also, the comparatively moderate peak is the result of flying to the side of the valley so that the actual track was several hundred yards from a track which would have been directly over the stack.

1120038

In continuing to study the cloud of radioactive gases, the next two passes recorded on the following page were made 200 feet lower at an altitude of 1300 feet M.S.L. For these passes the flight path was altered slightly to cross directly over the stack and more directly within the gaseous trajectory beyond. Since the stack was approached from the upwind side, no significant increase can be seen until directly over the stack when the instrument was driven off scale within a five second interval. After passing the stack, a series of lower but still strong returns were received for approximately eleven miles downwind. The explanation for the rapid fluctuation as well as the peaks and valleys of longer duration in the instrument return is not definitely known but could be the result of the irregular distribution of the radioactive gases as they are carried downwind. Thus, the path of the aircraft could alternately be into, then out of the strongest concentrations.

Subsequent runs showed that inexperience in interpreting instrument data led to this run being terminated before it should have been. The instrument return seen at "A", the turn around point, is considerably higher than true background seen on the right. This run should have been continued until such time as background was reached.

1120039

Drawing # 7076

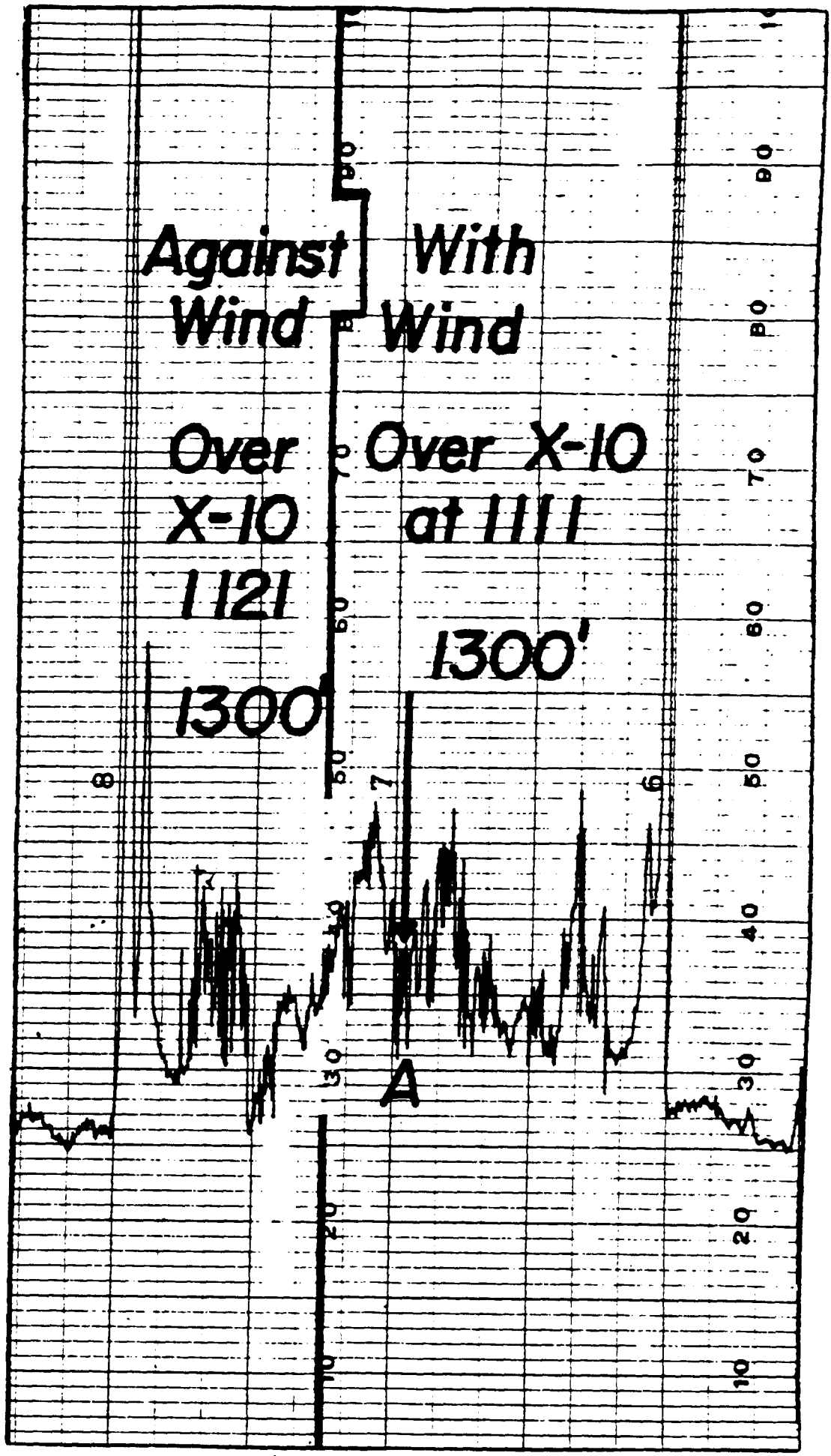

1120040

In examining the records of individual runs across the stack, it will be noted that immediately prior to stack passage while traveling upwind and immediately after stack passage enroute downwind there is consistently a definite drop in instrument return before the record begins to form the peak at the time of maximum reading. A possible explanation is that the gas cloud is slanted gradually upward so that on an upwind run the aircraft actually leaves the gaseous cloud at flight level before reaching the stack. Then when the aircraft is directly over the stack, a beaming effect from the poluted interior of the stack actuates the instrument. Likewise, on a downwind run, the instrument passes thru this "beam" above the stack, falls, and then rises again when the gaseous cloud is entered.

This contention is partially borne out by the fact that the gaseous cloud would not be expected directly above the stack, if even a slight wind was blowing; especially, when the flight level is several hundred feet above the stack top. This so called " eam" is also the only significant portion of the return received on the run at 2500 feet M.S.L. which was 500 feet above the inversion top at that time.

1120041

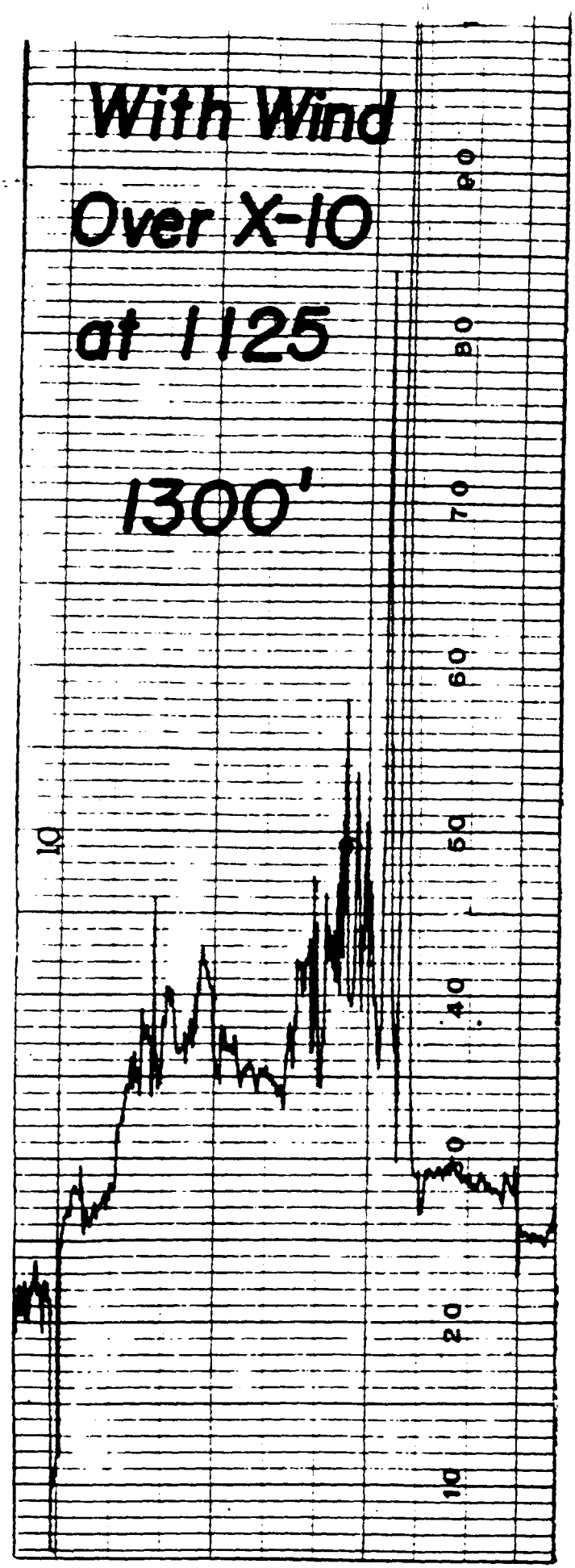

At the left is the record of the next pass. Again the track of the aircraft was displaced slightly to the south of the previous runs in an attempt to traverse the most concentrated portion of the gaseous cloud. This run was continued until background was reached, which was at a point 17 miles downwind from the stack.

Drawing # 7078

ORNL

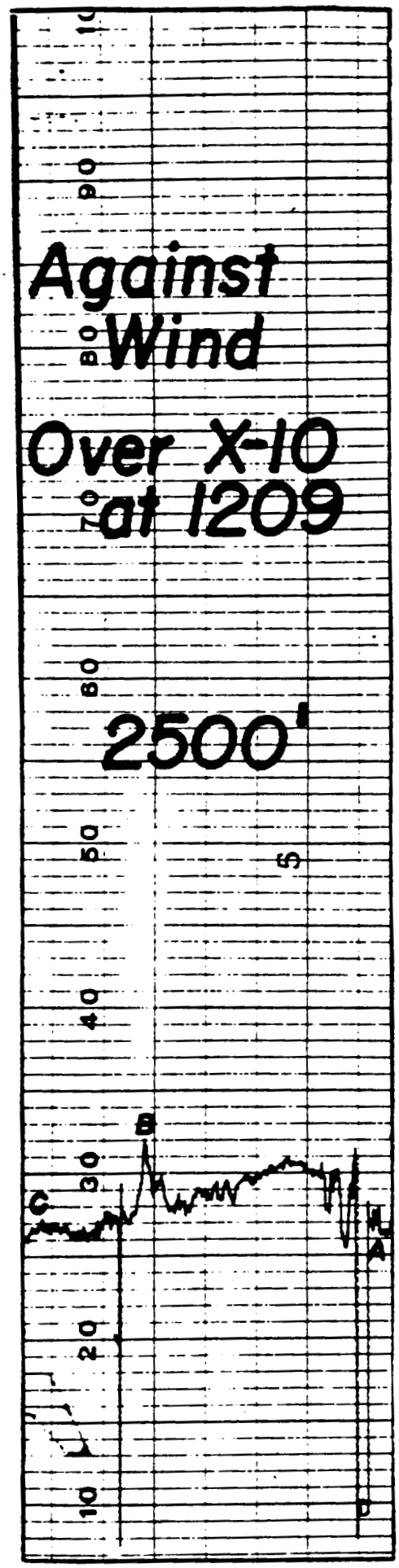

At this point it was decided to make an examination of conditions above the inversion top. By this time (noon) the inversion top had lifted to approximately 2000 feet M.S.L., had become less marked and some mixing was occurring through it. The record at left is that of a run 500 feet above the inversion top. Within 10 miles of the stack, the return is slightly above background which is taken at points A and C. Point B is a stack passage and this type of response will be discussed later. This slight return above background, but lacking the general symmetry of runs below the inversion top, is considered to be the result of mixing through the top of the inversion.

Drawing # 7079

CRNL

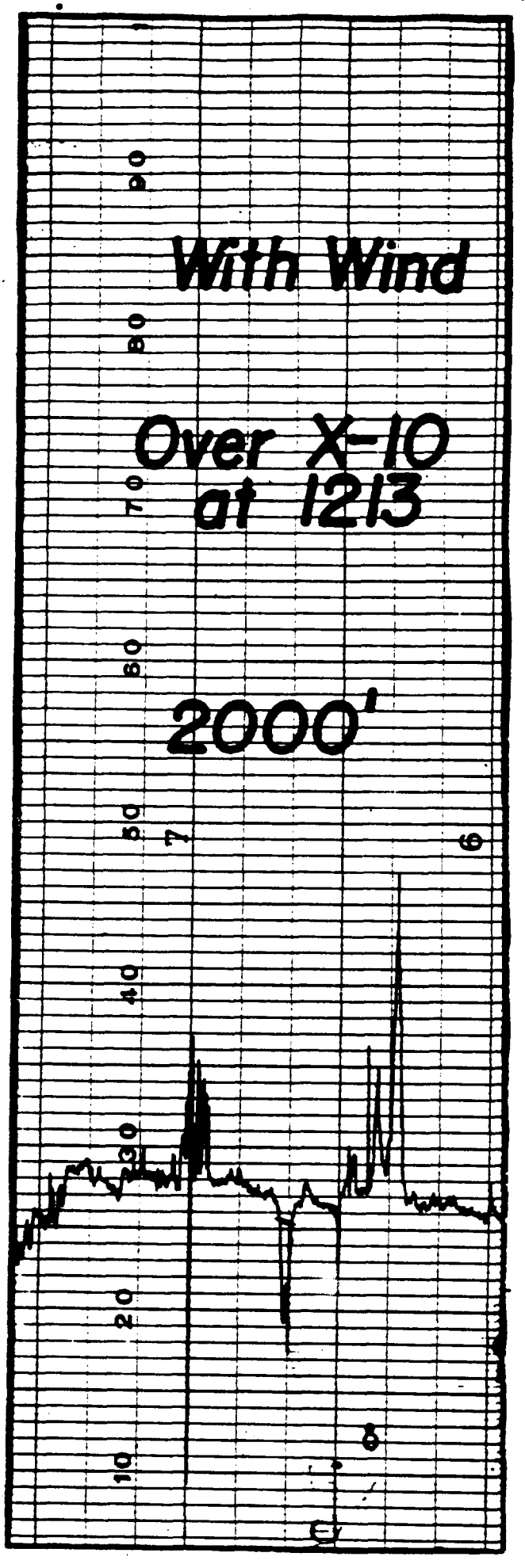

Shown here is the record of the return run which was made at the level of the smoke and haze top and which was believed to be at the inversion top. The maximum return over the stack is appropriately lower than was received on runs at lower levels. The symmetry and strength of this return is as would normally be expected if the very top of the gaseous cloud had been traversed. The return remains above background for approximately 15 miles downwind.

1120044

The record of two runs made at 14 miles downwind, shown on the following page, indicate that the width of the radioactive cloud is greater than 17 miles in width. Beginning with background at the right, the return increases to a maximum then decreases but does not reach background before the turn around at point A. The turn around was the result of terrain restrictions on the flight path and otherwise would not have been made until background was reached. The return run shown to the left of the point "A" is a very similar record except, of course, it is in reverse. Since the flight path was the same, the differences in return are attributed to the 250 feet decrease in altitude.

1120045

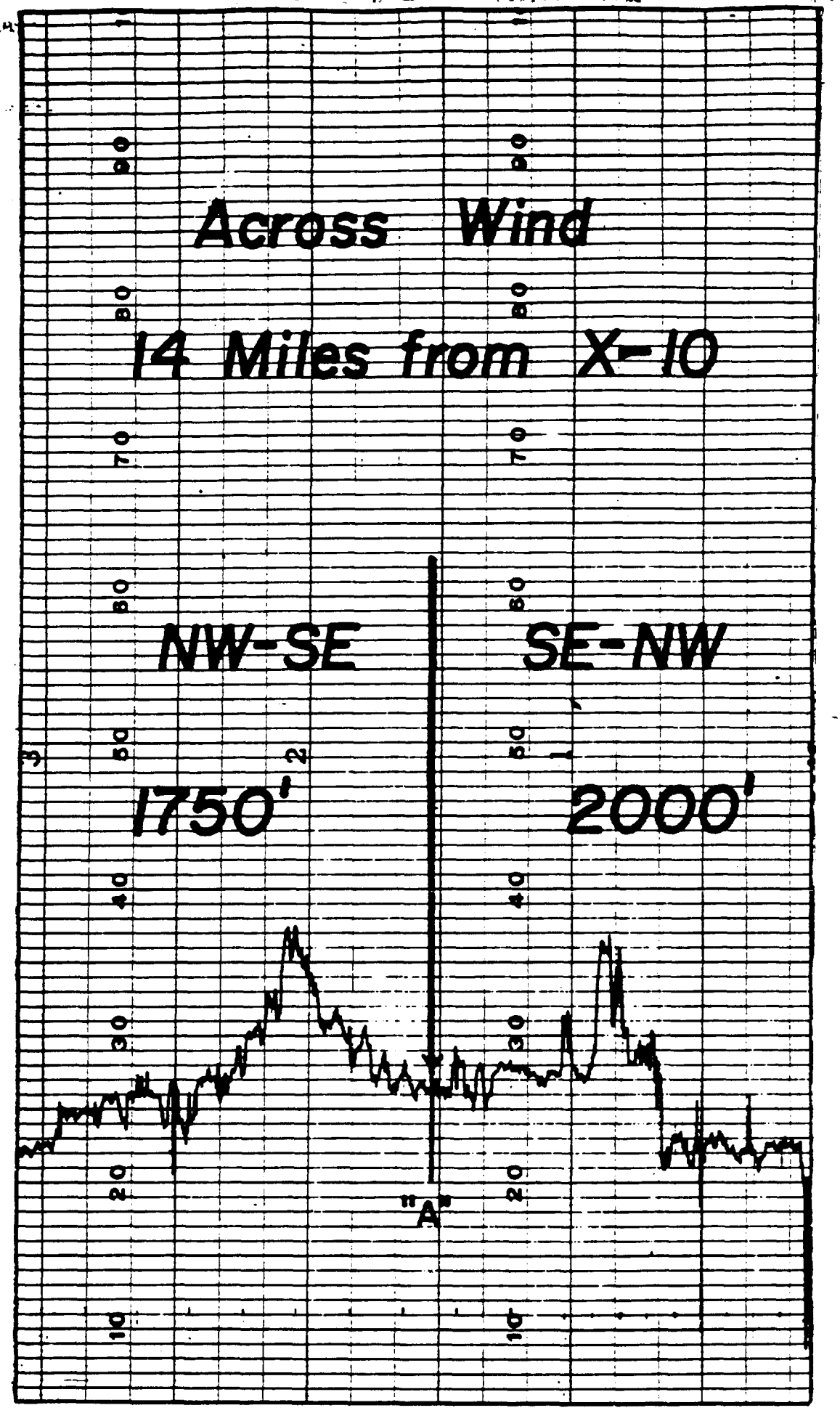
Across Wind
14 Miles from X-10
NW-SE
SE-NW
1750'
2000'
"A"
90
80
70
60
50
40
30
20
10

1120046

After the turn around at point "A", the record is much like the first part in reverse. The flight back to the stack was as nearly as possible over the same ground track; hence the symmetry of the curves. However, the slight variations between this and the return received on the outbound flight are no doubt the result of a displacement of a few hundred yards in the ground track.

1120047

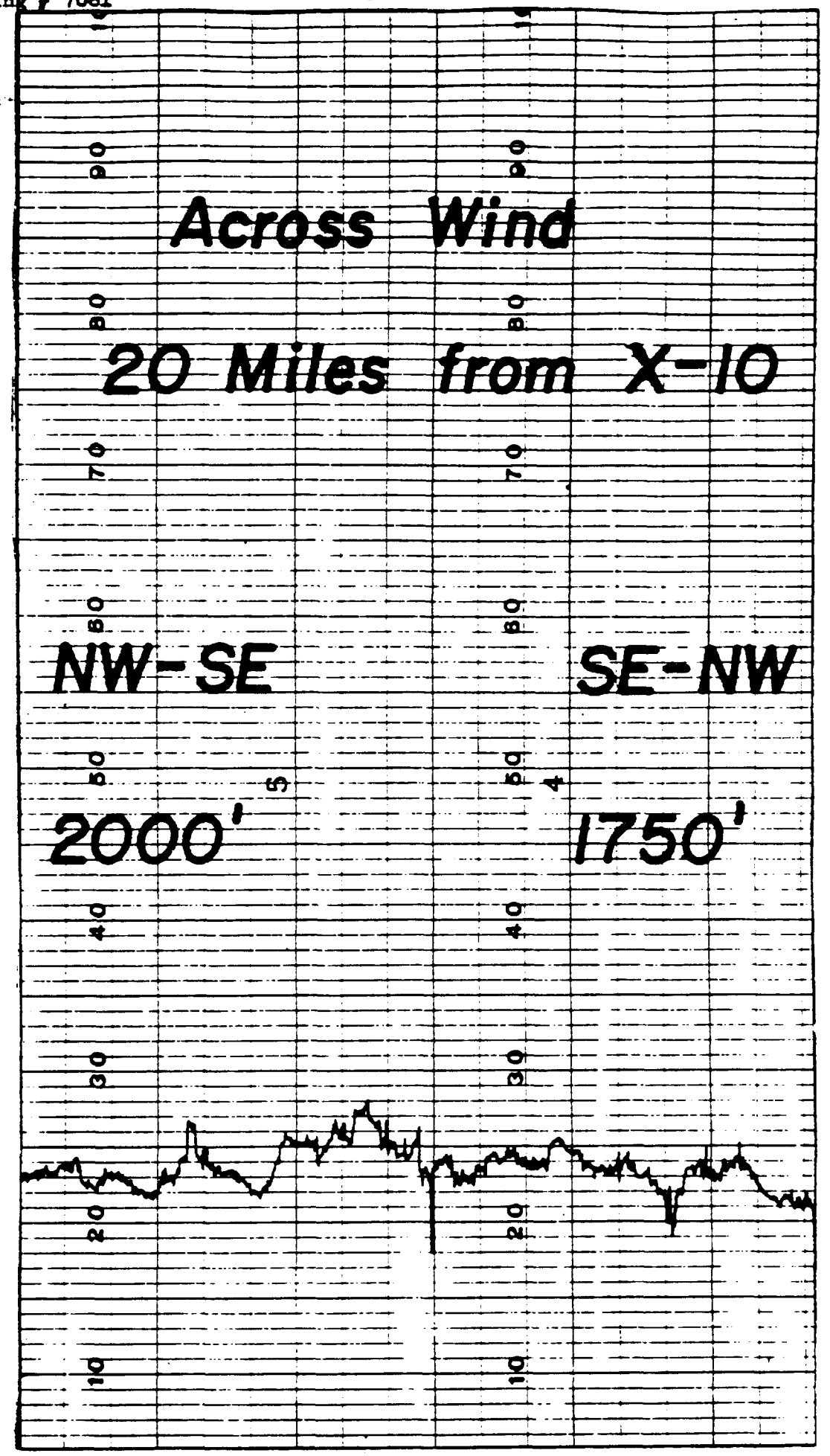
Across Wind
20 Miles from X-10
NW-SE
SE-NW
2000'
1750'
5
4
90
80
70
60
50
40
30
20
10

1120049

On the following page is the record of the two transverse runs 20 miles distant from the source. Whether or not the fluctuations shown have any significance can not be determined at present due to inexperience in interpreting fluxuations in background due to natural causes. The definite crests and valleys may well be actual return above background. However, the returns so closely approach background fluctuation that no conclusion may be reached. If the return at 20 miles had been stronger, flights over more distant tracks would have been flown.

1120048

After completing nine flights parallel to the wind above and below the inversion, a series of runs at a right angle to the wind were flown at positions 11, 14, and 20 miles downwind from the source. The record on the following page is that of the two traverses at 11 miles and indicates that the cloud is about ten miles in width at 1300 M.S.L. and about thirteen miles in width at 1500 feet M.S.L. Point A is the point of the turn around. The strongest return is higher in the 1300 feet pass than at 1500 feet and occurs in both cases as the open valley in which X-10 is located is crossed. This would indicate a possible funneling effect of the terrain ridges and valleys. This funneling effect also seems to have been responsible for the secondary maxima which occurred over the valley just east of the X-10 valley.

1120050

IV. Flights at Hanford:

A. Types of Flights Made:

The flights made in the vicinity of Hanford were for primarily one purpose. They were flown for the detection at the greatest possible distance the gases from dissolving operations. All meteorological effort was for the success of this type of flight. One afternoon the filters were exposed by flying for two hours in the vicinity of Walla Walla; but, except for a general wind forecast, no other meteorological planning was required.

B. Geographic Features of Area:

1. Airport

The airport used by the project airplane was the small field just outside of the town of Richland. It was about 35 miles from the plant area, about twice as far as the distance between McGhee Tyson Field, Knoxville, and X-10; but the meteorological conditions at the two places was very similar because they are both situated in the same broad flat valley. There was no weather observation station at the airport, only tower facilities, so it was not necessary to estimate the weather at the dissolving plants in terms of the weather at the airport.

1120051

2. Operational Area in General

As at Oak Ridge, when beginning project flights at Hanford, it was not known how far it would be possible to track the radioactive gases. It was at first assumed that the source would be many times that of the stacks at Oak Ridge; and consequently, flights were likely to extend over a radii of a hundred miles or more. It was even assumed that the valley in which Hanford is located might be filled with contaminated air under a prolonged inversion condition so that the entire valley would act as a source. Should the source be such a large broad area it might have been possible to track the radioactive gases several hundred or even a thousand miles. Therefore, the geographic features had to be considered in detail for approximately 200 miles from the stacks, and in general more than 1000 miles. It was thought that if the air of the entire valley was released by the elimination of an inversion, the contaminated air would move in a generally easterly direction. More consideration was given to possible long range flights to the east than to the west. Actually, successful detection was accomplished only within the prohibited area so this discussion of geographic features will be limited to a description of that area. In the future, if it becomes neces-

sary to track a really strong source from the Hanford stacks, careful consideration will have to be given to the entire 150 mile wide, bowl-like valley, between the Rockies and the Cascades, in which the Hanford Works are situated. Also, it will be necessary to consider the valleys of the Columbia and Snake Rivers as possible channels through which contaminated air may flow. Geographically speaking, the most striking feature of the operational area was that it was nearly a flat plain. The character of the land is desert-like, and air to ground visibility was remarkable when compared to the Knoxville-Oak Ridge area. When over the prohibited area, it was possible to see all of the features of the area as well as hills and mountains a hundred or more miles away. Significant topographic features are two small hills which rise to slightly over 1000 feet M.S.L. just north of the center of the area, otherwise the entire prohibited area, about thirty miles in diameter, is about 400 feet M.S.L. The area is approximately bounded by the Columbia River on the north and east side and by a mountain ridge 3000 to 4000 feet high on the west and southwest side. Except for the atomic plants, a few roads, and the abandoned town of Hanford, there are almost no identifiable points over which flight tracks could

be begun or ended. From a navigational standpoint, flight over such a flat desert resembles flight over water. No map was obtainable by project personnel which accurately located the plants or the improved roads. Actual location of important features was done visually while flying over the area, and flight paths were designated with respect to a particular stack rather than to a location on a map.

3. Dissolving Plant Area:

There are two dissolving plants at Hanford. They are almost identical in appearance and each has a single stack which is the source of the radicactive gases. The plants are about five miles apart, and there is a weather tower half way between them. The stacks of the plants reach 200 feet above the surface and the weather tower extends to 400 feet. The ground is practically flat between and around the two plants. There are no distinguishing geographic features associated with the plants to be given meteorological consideration.

C. Meteorological Characteristics of the Region During the Time the Flights Were Conducted:

Not very much was leaned concerning the meteorological characteristics of this region during the time the project

personnel were staying at Richland. The local weather conditions are greatly affected by the surrounding mountainous topography, and without considerable experience with this area it is not possible to understand these effects. In particular, it is difficult to forecast wind direction and velocity as the effects of the irregular mountainous terrain surrounding the area are very complicated. By watching smoke, it was seen that the wind at Richland might be quite different in direction and velocity than the wind at the plant sites, even though the land was flat and open between. At night the sky is frequently clear, or nearly so, and heat is radiated from the valley so that strong temperature inversions are produced. It is during the night, when the inversions are present that the dissolving gases are released. These gases remain at about stack level until morning and are dissipated as surface heating from sunlight eliminates the inversion. If such an inversion condition is not present it is likely that the dissolving operation will be postponed. Therefore, the dissolving processes at Hanford present a very favorable situation with regard to locating activity close to the plant because, in the morning, the activity is concentrated in a relatively shallow layer.

1120055

D. Meteorological Facilities Available:

There is a weather station operated by the General Electric Company half way between the two dissolving plants at the base of the 400 foot weather tower. This station makes surface observations and pilot balloon observations. The weather tower has aneomometers and wind vanes at each 50 foot level together with thermohms at the same levels. Dissolving plant operations are based upon the observations and eight hour forecasts of this station. No other weather observation station was available for the local area. Flight planning was done on the basis of information received from this station and the U.S. Weather Bureau facilities at Seattle. Seattle is about 180 miles away, across the Cascade Mountains to the northwest. There, both airways and regional forecasts are prepared for the entire state of Washington. For information found on any sort of meteorological plotting chart, it was necessary to call over an A.E.C. leased telephone line to the airways forecaster in Seattle.

E. Description of Flight Planning Procedures:

Flight planning at Hanford was very similar to that done at Oak Ridge. On the afternoon before a project flight, the Weather Bureau Office at Seattle was called for a general

1120056

estimate of the flying weather and upper winds on the following morning. Then on the morning of the flight, the weather station at the plant site was called and the latest upper wind sounding was obtained, as well as the wind direction and velocity at the 200 and 400 foot levels on the weather tower. All of this information was used to estimate the general direction of flow of the stack gases. As at Oak Ridge, flight plans were not completed on the ground but was continued throughout the flight depending on the behavior of the instruments.

The Problems of Actual Flight Operations at Hanford:

The project personnel were completely unprepared for the slight activity found at Hanford. On the first two flights the air conductivity instrument was giving erroneous readings because some lightweight material had blown into the tube. Since it was expected that high activity would be found a long distance from the source, time was wasted examining these false returns. On the second day erroneous instrument readings were responsible for directing the project aircraft about thirty miles up the Snake River, more than 50 miles from the stacks. If some information on the actual amount of activity had been available, the instrument would have been checked immediately.

1120057

Checking the instruments for false readings is easily done even in flight. The actual amount of activity at Hanford was much less than that found at Oak Ridge and was insufficient for project purposes. Had more activity been present and extensive detection operations carried out, there would have been two outstanding meteorological problems. One of these would have been how to forecast the air circulation in the valley with just the single meteorological station at the plant site, and the other would have been how to do meteorological planning without seeing meteorological plotting charts. Meteorological teletype facilities are not available in the Hanford area so adequate charts cannot be prepared.

1120058

Typical Project Flight at Hanford

A discussion will be presented here of a typical flight at Hanford to illustrate the problems encountered and the procedure of operation. A brief comparison of the results at Hanford and at Oak Ridge will be made.

Planning which was done on the previous afternoon for this flight was based on the following dissolving operation schedule.

	Beginning	Maximum Activity	Ending
East Plant	0000 P	0100 P	0600 P
West Plant	0600 P	0700 P	1200 P

Take-off immediately after daybreak was decided upon because daylight was desirable for optimum navigation conditions. At that time activity from the west plant would be at maximum, whereas the maximum activity from east plant would have drifted downwind.

A thorough investigation of meteorological conditions that could be anticipated was made on the basis of data received by telephone from the Seattle Weather Bureau Office and from the weather observation station in the Hanford plant area. Based upon forecasted weather, a chronological list of

1120059

flight patterns was made which would afford the most thorough examination of the gaseous cloud. Because flight patterns close to the stack and through the visible dissolving fumes were planned, simultaneous filter detection of particulate matter was considered advisable.

Take-off was at 0620 P and on the original climb from the field a sounding up to 3500 feet M.S.L. was taken by means of the airborne psychrometer. This sounding revealed that the top of the surface inversion was at 3100 feet M.S.L. The sky was clear and a wind of 9-14 m.p.h. from 300° - 320° existed from the surface to 2000 feet M.S.L. Smoke from all sources was observed to diffuse slowly at stack height as it flowed downwind. The brown off-gas from the dissolver stack was clearly visible and was subsequently used in conjunction with the measured wind data in following the gaseous trajectory. This brownish colored cloud billowed from the stack much like ordinary smoke. It was visible, although progressively less intense, for between one-half and one mile distant from the stack.

After the sounding was taken, descent to 1000 feet M.S.L. was made and the flight proceeded directly to the plant area. The following pages describe the passes made in the operational area.

1120060

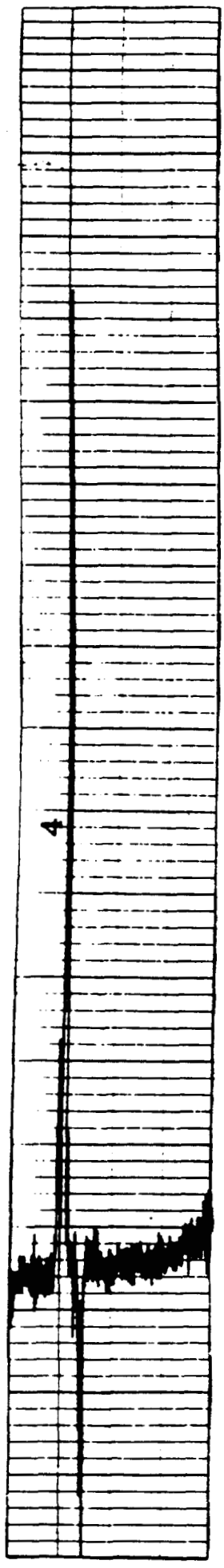

The first traverse whose record is shown on this page was made in an upwind direction at an altitude of 1000' M.S.L., which cleared the stack top by only 100 feet. From experience gained on previous days it was realized that an effort to get any response whatsoever would necessitate flight directly through the brown fumes and extremely close to stack top. From strength of instrument return it was also realized that flight close into the source area presented no health hazard to flight personnel. In spite of proximity to stack top and actual passage through visible off-gases, the record shows no return above background except that return directly above the stack, which is of extremely short duration. As at Oak Ridge, this strong yet very short lived response may be the result of the "beaming" characteristic of the stack rather than response from a concentration of gaseous radioactive elements in the air.

1120061

Drawing # 7083

ORNL

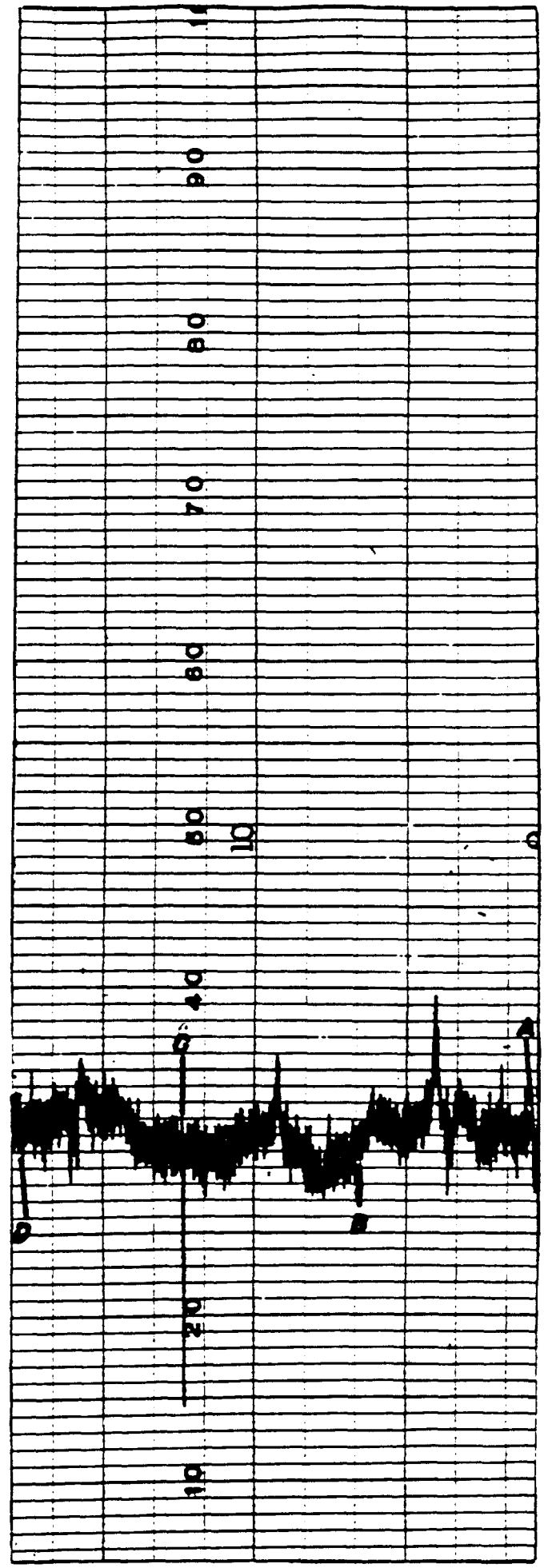

1120062

Following this traverse, a number of other traverses similar to it were made but at increasing altitudes. In each succeeding pass, the altitude was increased by 100 feet. At 1500' the response was hardly noticeable and at 1600' even the peak over the stack had completely disappeared.

At this time an effort was made to determine the width of the cloud at various distances downwind. Because of the extremely weak response at the stack, the first of a series of transverse passes was made at only one mile from the west plant. For the same reason, the transverse runs were kept short (5 miles) in length. On the preceeding page is the instrument record of three of these passes, all one mile downwind. The first pass made at 1000 M.S.L. recorded form A to B, was weak, but the next two, B to C, and C to D, made at 1200 and 1400 feet M.S.L., respectively, are even weaker. The latter was so weak, in fact, that any further work at this point was considered of no value.

Following this, an investigation was made of the area where gases of maximum activity from the earlier dissolving could be expected. A series of "S" patterns were begun 5 miles downwind and continued for 7 miles but with no positive results.

1120063

Then an examination of the east dissolving plant, which had passed maximum activity by seven hours, was made. Returns received from this plant were much the same as those from the west plant which was currently at maximum. Little or no increase in instrument response could be observed as the stack was approached but the peak of short duration was still present. The fact that sharp peaks of equal intensity were received from two plants of differing activity level further bears out the "beam" theory.

In view of these very limited returns it was decided that any further examination was useless at this time. Therefore, a wide zig-zag pattern diagonally across the basin was flown from the source to the Richland airport. No return was received during the time this pattern was flown.

It is of interest to compare the record of one particular stack passage at Hanford with a similar one at Oak Ridge. For instance, the record on page 144 taken at Hanford may be compared with the record on page 125 taken at Oak Ridge. Any differences in flight variables (i.e. altitude) favor a stronger return at Hanford; yet the Hanford record lacks any of the response seen on the Oak Ridge record except, of course, the instantaneous stack return.

Subsequent counting of the airborne filters from this day's operation revealed no significant evidence of particulate matter in spite of the many penetrations of the off-gas fumes.

This flight determined that the gaseous and particulate radioactivity at Hanford is very low. It was concluded that further use of similar Hanford operations as a source for the purpose of this project was not practicable.

1120065

CONCLUSIONS:

1. Rough Terrain Complicates Detection Problem

Hilly or mountainous terrain greatly complicates the problem of detection of airborne radioactive materials near the surface. In addition to the fact that safety considerations limit flight patterns over rough terrain, the behavior of quantities of radioactive gases such as are released at Oak Ridge is difficult to predict because of the ridges. The gases could be tracked much more easily if they were released over a broad flat surface such as the ocean, or if they were released in the free atmosphere at an altitude above the layer affected by surface conditions, that is, above the gradient level. If a much larger source of radioactivity is being used than was available for this project, and detection operations are being performed at a distance of a hundred miles or more, local topography is not so important as an entire valley or a region can be considered to be a source.

2. Additional Meteorological Observations Are Needed

One of the purposes of this project was to obtain information concerning the processes by which radioactive materials become dispersed through the atmosphere. Not much

1120066

was learned at Oak Ridge or Hanford with regard to the general problems of dispersion. There were not sufficient meteorological observations at either place whereby the effects of topography on meteorological conditions could be accounted for. It is doubtful that the dispersion observed is representative of the free atmosphere, and no means exists whereby the data collected can be given wide application.

3. Diffusion Studies Will Require Simultaneous Measurements of Radioactivity

During a flight by the project airplane the following changes influenced the instrument return received: (1) the strength of the radiation decreased because of the short half-lives of the radioactive gases, (2) the wind direction and velocity varied, (3) the stability of the air changed. Yet during a one or two hour flight only a superficial examination of the gaseous cloud could be accomplished by a single airplane. The longer the flight period, the more influence these variables have on instrument reponse. It is difficult, if not impossible, to analyze and interpret data consisting, for example, of one traverse made ten miles distant from a stack at one given altitude and another made 15 miles distant one hour later.

1120067

4. Atomic Plant Detection Using Radioactive Gases Is Not Likely at Ranges in Excess of 1000 Miles

Although there is little scientific data available on which to base this conclusion, the dilution due to atmospheric diffusion processes appear to be so great that it does not seem likely that radioactive gases from an atomic plant will be detected at ranges of 1000 miles or more. From careless plant operations radioactive particles are more likely to be successfully detected.

Recommendations

1. Much more successful flights would have been possible on this project had the natural radiological background for the instruments been better understood. It is strongly recommended that as much data as possible be obtained on the background characteristics of the project instruments. This background data should be obtained in different geographical locations, at different altitudes, and under widely varying meteorological conditions.

2. The nuclear instruments of this project will be very useful on future atomic bomb tests. Therefore, it is recommended that consideration be given to adapting these instruments for measurements of clouds produced by atomic bombs.

1120068

3. Because of the difficulty of exactly locating the aircraft with respect to topography consideration should be given to photographing the terrain beneath the airplane, to tracking the airplane by means of two or more theodolites. The airplane might also be tracked with radar.

4. In future operations where meteorological observational facilities for chart work are not available, it is recommended that a mobile meteorological unit be brought into the area. It is almost impossible to do meteorological planning without surface and upper air charts at hand.

5. A single observation station in the operational area is not sufficient. It is recommended that a network of observations be established in future operations even though they be very simple. Theodolite teams for upper wind observations would be extremely helpful.

6. Projects such as this can collect in a very short time a great wealth of information which requires more effort for proper correlation than is readily appreciated. Therefore, in future operations it is recommended that consideration be given to providing an adequate staff of personnel for proper processing of all radiological and meteorological data collected.

1120069

ORNI

APPENDIX

1120070

ORNL

Here in outline form are some items of historical interest in connection with this project:

Personnel who regularly participated in project flights:

Technical Advisors:	Dr. Francis J. Davis and Paul W. Reinhardt of the Oak Ridge National Laboratory
Meteorological Research:	Paul A. Humphrey of the U.S. Weather Bureau
Air Force Flight Crew:	Jesse M. Walker, Capt., Aircraft Commander Robert L. Kane, 1st Lt., Co-pilot and Weather Officer William E. Harlan, 1st Lt., Project Officer Ned B. Walker, M/Sgt., Crew Chief All Air Force Personnel assigned to 2078th Air Weather Sq. (Spec) Fairfield Suisun AFB, California
The Aircraft:	C-47 Ser. No. 44-77263

1120071

Project Begun:	17 November 1948 at Oak Ridge, Tennessee
Project Completed:	16 March 1949 with conclusion of work at Hanford Works, Richland, Washington
Total Flight Time For Project Data:	58 hours

1120072

Chronology of Project Flights

Date	Duration Hours/Min	Purpose*	Limit of Return
		OAK RIDGE	
Nov. 17	2:30	a	0
20	1:30	a, b	0
30	3:00	b, c	0
Dec. 1	1:30	b, c	2 mi.
2	1:20	c	5 mi.
8	2:50	b, c, d	1.5 mi.
17	1:35	c, d	1.0 mi.
31	2:50	b, d	2.5 mi.
Jan. 6	4:00	c, d	3.0 mi.
7	4:00	c, d	
11	3:00	c, d	15.0 mi.
14	2:25	c, d, f	8.3 mi.
15	1:15	c, d	8.0 mi.
20	2:45	e	- - -
27	1:10	e	- - -
Feb. 1	2:00	e	- - -
2	1:40	e	- - -
3	1:55	e	- - -

1120073

Date		Duration Hours/Min	Purpose*	Limit of Return
Feb.	7	2:00	e	- - -
	8	3:00	e	- - -
			HANFORD	
Mar.	2	2:00	d	- - -
	3	7:30	d, f	- - -
	4	2:30	d	2.0 mi.

a. Initial check of instruments to determine response in the undeveloped form in which the instruments were installed.

b. Check on progress of instrument development as performed from day to day in laboratory.

c. Comparison of limit (linear and vertical) of detection of instruments.

d. Measurement of dimensions of radioactive cloud. Determination of shape of cloud.

e. Obtain air samples and expose filters for filter efficiency research.

f. Expose filters for possible particulate contamination.

1120074

THE PROJECT AIRCRAFT

(General)

The project aircraft, C-47 Ser. No. 44-77263, was modified during the months of October and November of 1948 by members of the Air Materiel Command at Wright-Patterson AFB. It became a flying laboratory, complete with work benches and 110 volt 60 cycle alternating current.

The benches are clearly shown in the photograph on page 159. Each is equipped with a sliding drawer which has a sliding half-cover, converting the drawer into an additional work bench when needed. To gain still more work bench space, an additional plywood section was installed to fill the space between the two main benches. This section is hinged and folds upward to give unrestricted access to the emergency hatch.

Each unit of electronic equipment is shock mounted. Five goose-neck lamps provide adequate illumination for night operation. Two sliding chairs, fastened securely to the floor by steel T-runners afford comfortable and convenient operating positions.

1120075

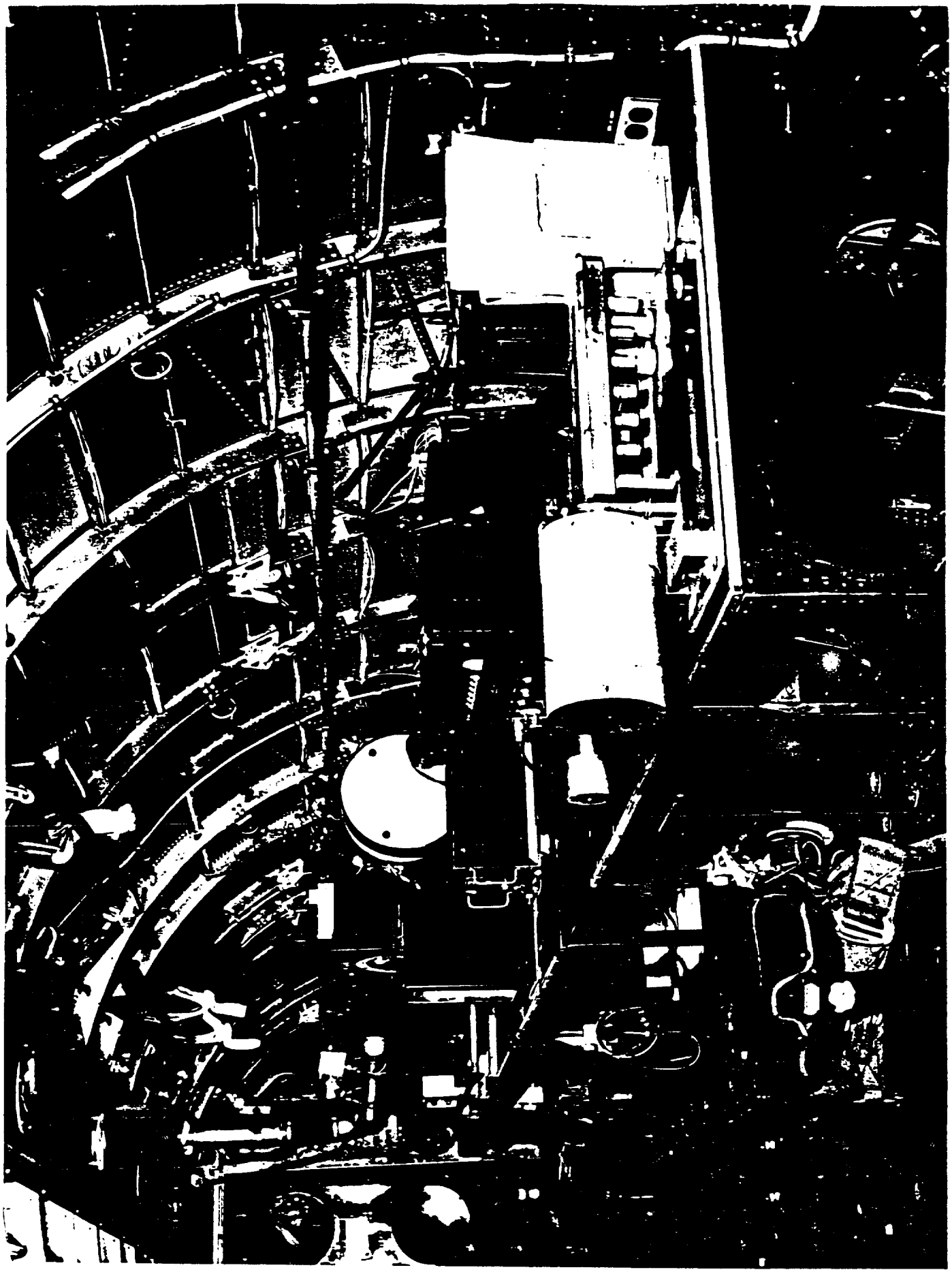

The Power unit, shown on page 161, the PE-75, supplies 110 volts, 60 cycle alternating currect at 2.5 KVA for the use of the instruments in the aircraft. This does away with the need of converting the conventional laboratory instruments to utilize the 28 volt D.C. power of the aircraft.

For use on long flights, the unit was modified to include an additional fuel tank and increased the total fuel supply to 10 hours.

Power is taken off through a variac and then fed through to the individual double outlet boxes. There are eleven of these boxes along the back edge of the work benches, each one separately fused.

It is recommended that if this type power unit is to be used in a similar manner in the C-47 aircraft, that it be mounted so as to be in a horizontal position when the aircraft is on the ground. The PE-75 has the oil pump placed in the forward end of the crakcase and when the unit is mounted in the position shown on page 162, the oil flows away from the pump during ground operation and the engine can be damaged very easily, if the oil level is low. Such a thing occured on this

1120077

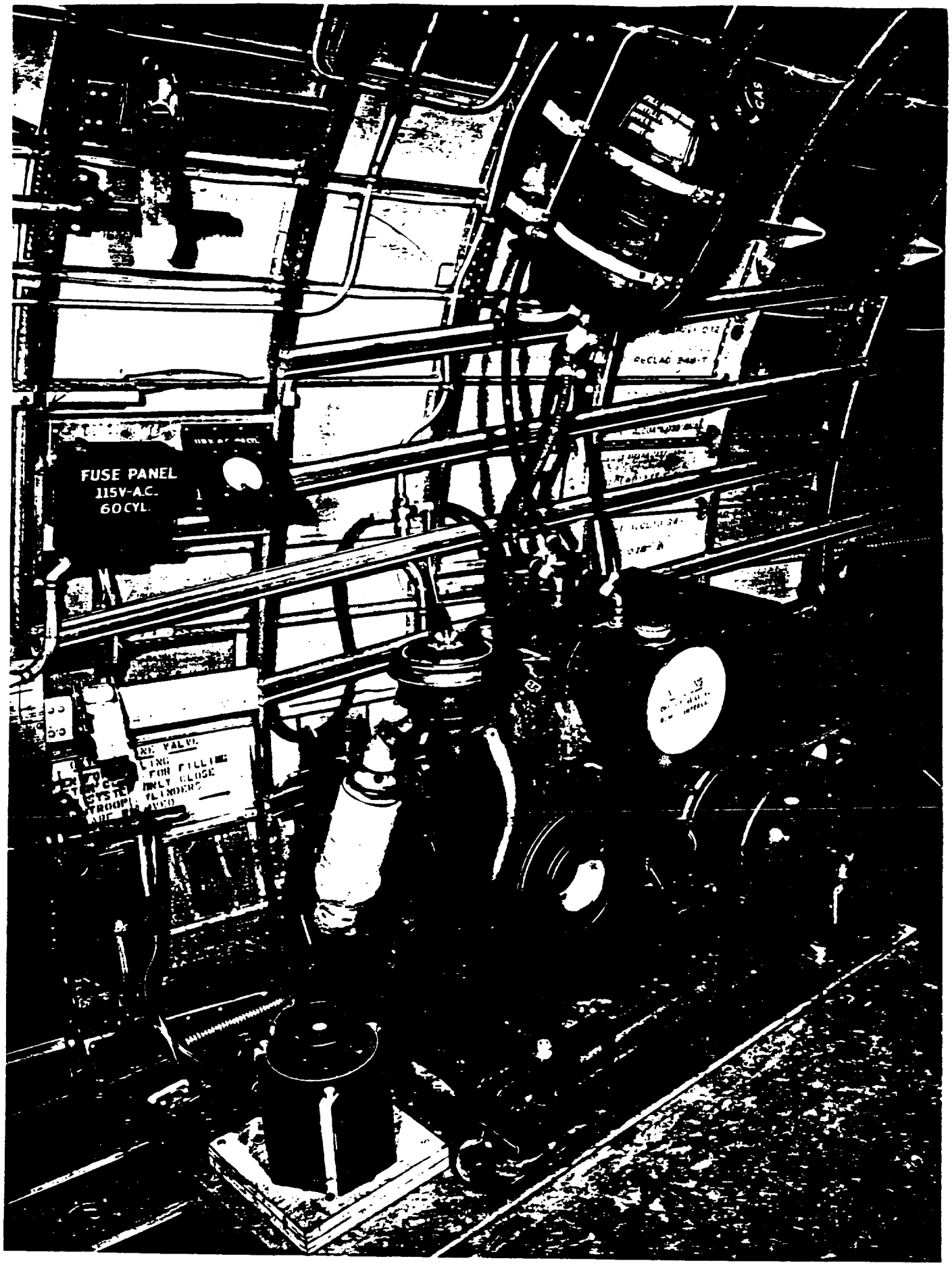

1120078

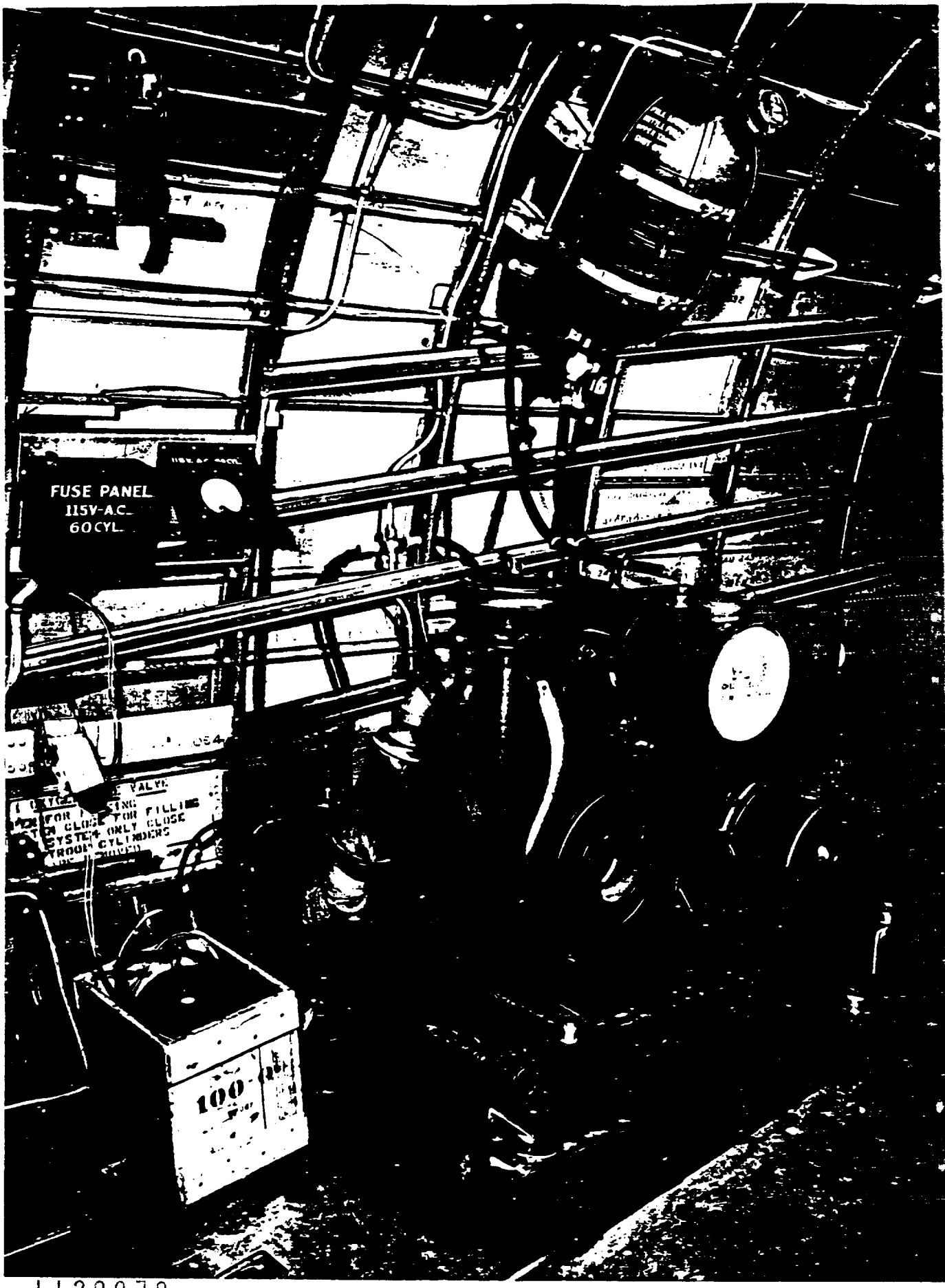

1120079

project and the engine had to be replaced. The power unit was remounted in the position shown on page 161 and has given satisfactory service since.

1120080

ORNL

Flight Log

Date: 11 January 1949 Take-off: 1042 E Landing: 1335 E

Time From	Time To	Heading	Altitude M.S.L.	Time Over Fix	Remarks
1042	1054	———	3000	———	Enroute to X-10 area
1054	1056	50	2500	1055:40	Stacks at X-10 used as fix
1057	1102	230	2000	1059:30	ditto
1103	1108	60	1500	1106:40	ditto
1109	1115	235	1300	1111:05	ditto
1116	1122	60	1300	1120:50	ditto
1123	1131	(235) (Made turn from 235° to 215° at 1128)	1300	1125:25	ditto
1132	1141	60	1300	1139:50	ditto
1142	1150	230	1500	1144:10	ditto
1150	1205	Climbing turn 12 minutes down wind to receive radio message			
1205	1210	45	2500	1209:25 at 1205 -	Crossed Tennessee River Stacks at X-10 used as fix
1211	1218	225	2000	1213:20	Stacks at X-10 used as fix
1219	1224	315	1300	———	11 miles down wind. Over Clinch River.
1225	1234	135	1500	———	Same as above
1234	1241	No Pattern			
1242	1250	315	2000	———	14 miles down wind
1251	1258	130	1750	———	Same as above
1300	1307	315	1750	———	20 miles down wind
1307	1313	130	2000	———	Same as above
1313	1323	50	2000	1322:03	Stacks at X-10 used as fix

1120081

ORNL

Flight Log

Date: 4 March 1949 Take-Off: 0620 P Landing: 0821 P

Time From	Time To	Heading	Altitude M.S.L.	Time Over Fix	Remarks
0620	0635	300	Sfc - 3500 3500 - 1000	0634:30	Obtained sounding by climbing "stair step" fashion, then descended. West plant used as fix.
0635	0638	90	1100	0635:40	West plant used as fix
0639	0643	300	1000	0641:20	ditto
0643	0645	120	1200	0644:15	ditto
0646	0649	275	1300	0647:25	ditto
0649	0652	100	1400	0650:30	ditto
0653	0656	280	1500	0655:45	ditto
0657	0701	90	1600	0659:30	ditto
0702	0703	360	1000	0702:40	Fix 1 Mile directly downwind from stack of west plant.
0704	0706	180	1200	0705:15	ditto
0707	0709	360	1400	0708:45	ditto
0711	0714	90	1000	0711:45	ditto
0714	0727	—	1000	———	"S" pattern across flow, 5-12 miles downwind. See Map*
0727	0733	280	1000	0731:55	West Plant used as fix
0734	0737	100	1000	0734:20	
0737	0744	—	1000	———	Loop pattern. See map*
0745	0747	100	1000	0745:50	East Plant used as fix
0745	0751	270	1200	0749:30	ditto
0756	0820	—	1200	———	Zigzag pattern to field. See map*

* The map referred to is the aeronautical chart in the aircraft. When the track of the airplane was not straight the actual pattern flown was traced in pencil on the map. A copy of this working chart has not been included in this report.

1120082