[redacted] 000408[redacted]

UNCLASSIFIED

AUG 2 4 1959

-1-

Ref. [redacted]

Emilda Seph 10/03/96 W.C. Layne
R.T. Duff 10/29/96 96SN506
9-18-96

SCDR 38-59

NMC-839

AUTOMATIC GAIN CONTROL SYSTEM

R. D. Griffith, 1456-1

W. F. Nielsen, 1456-1

R. [illegible] O'Neil, 1456-2

9-18-96 W. Layne 10/2/96 R.B. Cramer

Release to Open Net

[illegible]

[redacted]

UNCLASSIFIED

55/98

[redacted] FRD

XMC-839

AUTOMATIC GAIN CONTROL SYSTEM

1.0 Introduction

The purpose of the XMC-839 AGC system is threefold:

(1) To establish a constant video input level to the video and decision circuits, independent of the RF input level to the superregenerative receiver. The full dynamic range of the video and decision circuits is thus available at any RF input level, permitting maximum utilization of a return signal in the presence of jamming.

(2) To compensate for the inherent gain variations of the superregenerative receiver and to produce a receiving system of constant gain and firing sensitivity, independent of receiver tube, heater voltage, or other parameter variations.

(3) To provide the maximum video difference voltage for a given receiver input signal-to-noise ratio, so that a firing decision may be made on the minimum signal-to-noise input permitted by the system false-alarm protection requirement.

[illegible] are accomplished in the XMC-839 AGC system [illegible] by means of the idealized block diagram of Figure 1.

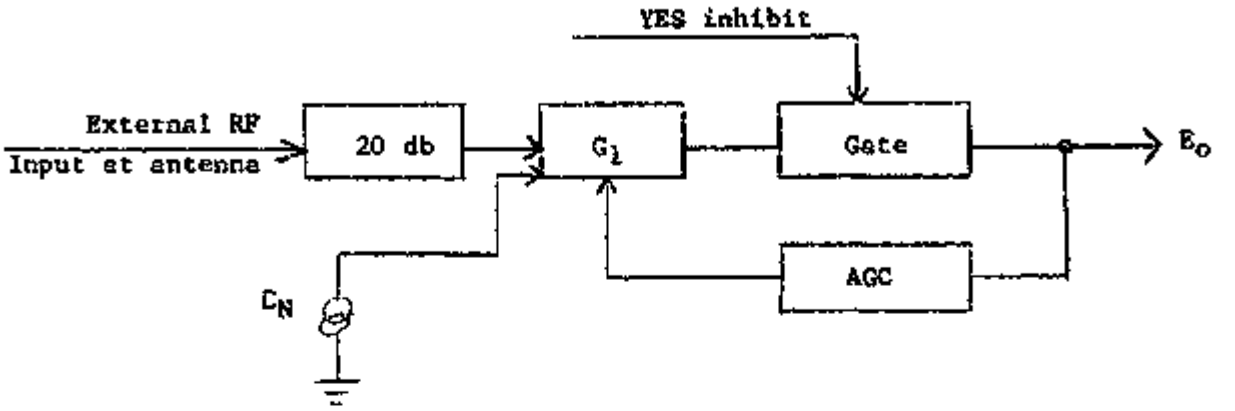

Figure 1. E_N ∝ Receiver Tube Noise Figure X Receiver Noise Bandwidth

Idealized XMC-839 AGC System

Ideally, E_o is held constant by means of a high-gain threshold type of AGC characteristic. In the absence of an external RF input, AGC increases the receiver gain until receiver self-noise is amplified sufficiently to produce the constant output, E_o. Tube measurement data indicate that the receiver tube noise figure is essentially constant. If the receiver bandwidth is constant, E_N will be constant. Since E_N and E_o are constant, and $E_o = G_1 E_N$, then AGC must force G_1 to be constant, thus compensating for open-loop gain variations in G_1 due to receiver feedback, receiver tube gm, and other parameter variations. With E_o and G_1 held constant by AGC action, the first two objectives of the XMC-839 AGC system are achieved. The video input to the video and decision circuits is held essentially constant at 0.25 volt peak, 1 μsec at the 37-percent points. The firing sensitivity

at the receiver input connector is held essentially constant at -83 dbm. A 20-db loss is inserted in the antenna-to-receiver line in order to meet the specified antenna terminal firing sensitivity of -57 dbm nominal.

The third AGC system objective is accomplished by making AGC effective on energy in the NO channel only. A return signal in the YES gate is unrestrained. For a given input signal-to-noise ratio, the video difference voltage is greater for this case where the NO video holds at nominal and the YES video increases, than for the case where the YES video holds at nominal and the NO video decreases, as in an AGC system sensitive to either gate.

The diagram of Figure 1, of course, represents an ideal which cannot be absolutely realized in practice. The video output, E_o, must change by some percentage determined by the gain of the AGC loop, in order to hold G_1 constant against receiver parameter variations. E_o must also change slightly to effect the change in G_1 necessary to achieve essentially constant E_o over the RF input range of self-noise to -9 dbm. Again, on a practical basis, the range of automatic gain control is finite rather than infinite and AGC cannot be expected to compensate for unlimited variations in receiver parameters and RF input level. What must be done first, then, is to reduce the variation of individual parameters such as receiver feedback, receiver tube, heater voltage, B+ voltage, etc., to their minimum practical values. The AGC system can then be designed to have sufficient gain to compensate for the known parameter and circuit variations.

A more realistic block diagram of the XMC-839 AGC system is shown in Figure 2. This diagram has been simplified to the extent that the gain has been assumed constant for those elements whose rms contribution to the over-all gain variation would be negligible.

The operation of the system of Figure 2 can be analyzed by breaking the loop at point X and obtaining the following two open-loop characteristics:

(1) Open-loop quench voltage produced by DC volts input at point X.

(2) Open-loop quench required to produce DC volts at point X.

The intersection of these two open-loop characteristics represents the closed-loop operating point. The closed-loop operating point 3-sigma range is represented approximately by the area common to the ±2-sigma open-loop characteristics. A graphical analysis of the operation of the system of Figure 2, obtained from the superposition of the ±2-sigma open-loop characteristics at point X, is shown in Figure 3.

2.0 System Description and Performance

2.1 Receiver

2.2 Detector

2.3 Video Amplifier, Gating, Stretching, and Integrating Circuits

The video amplifier, gating, stretching, and integrating circuits are described in detail in FS-1423(1006), XMC-839 Video and Decision Circuits

UNCLASSIFIED

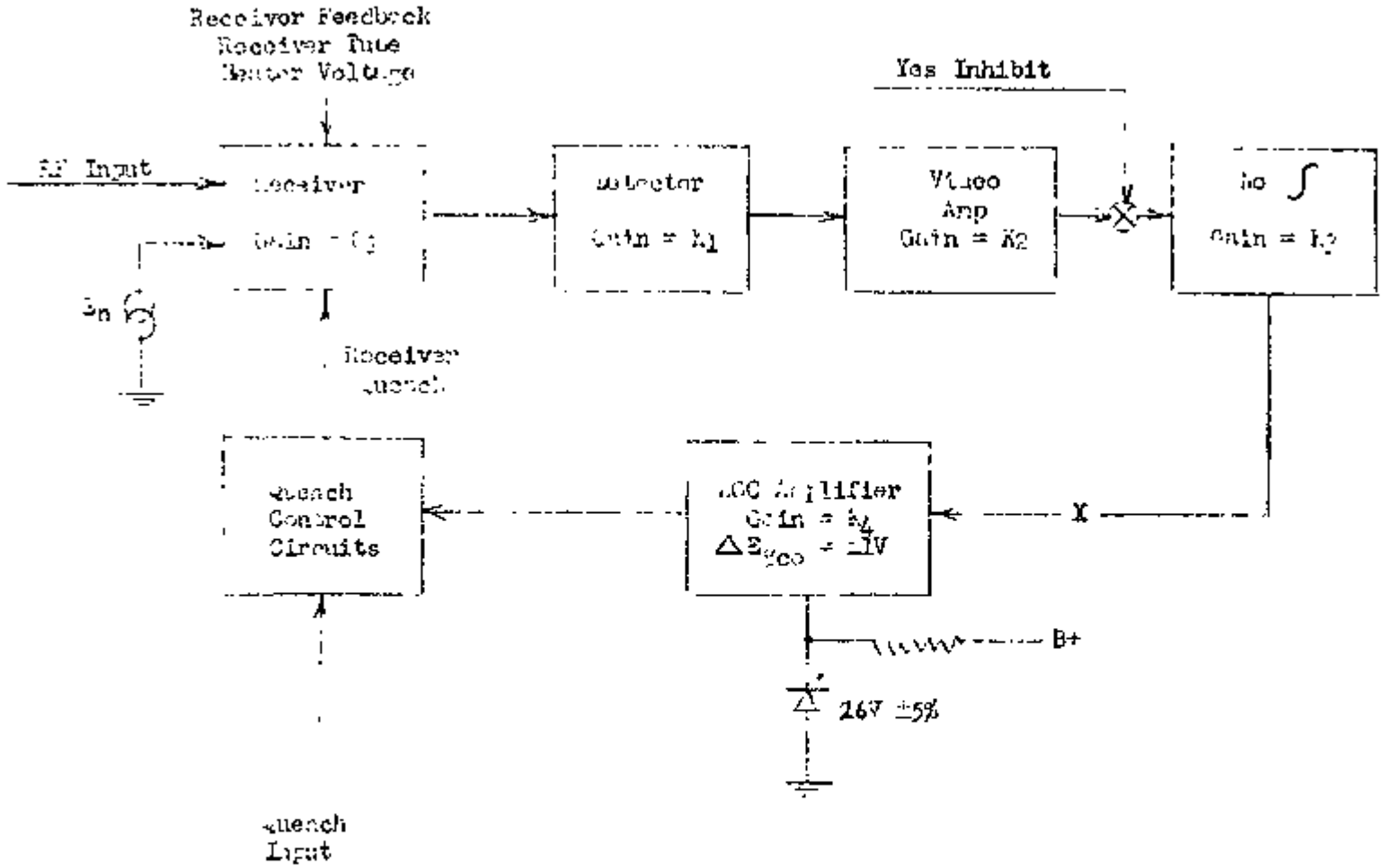

BLOCK DIAGRAM OF XMC-839 AGC SYSTEM

Fig. 2

UNCLASSIFIED

000413

Fig. 3

3σ RANGE OF AGC OPERATING POINT
DETERMINED BY INTERSECTION OF ±2σ OPEN LOOP CHARACTERISTICS

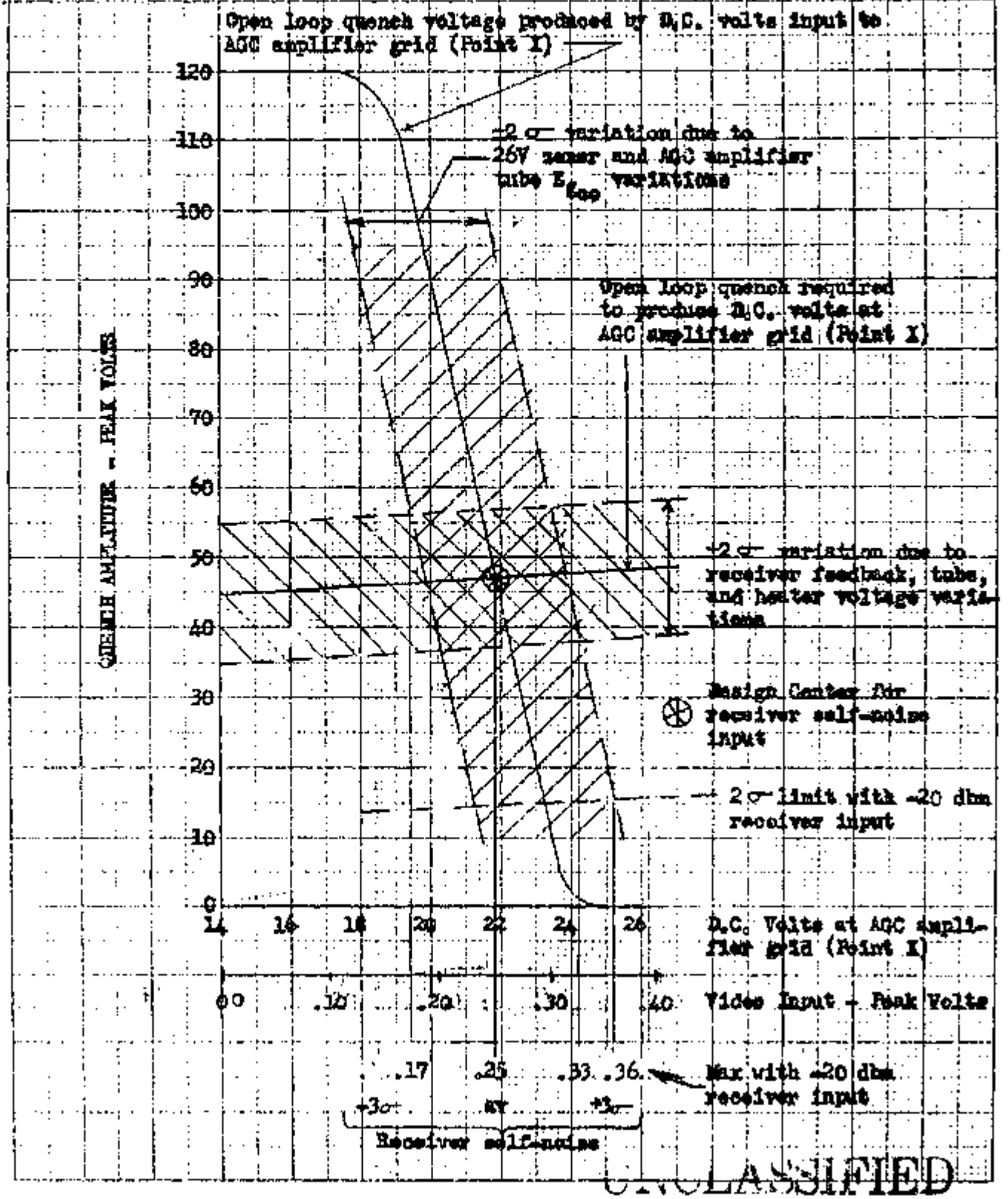

Although variations in these circuits (principally in the video amplifier) will cause some variation of the nominal detected receiver output, the percentage variation is so small, compared to the variation caused by other elements of the AGC system, that the rms contribution to the over-all gain variation is negligible.

2.4 AGC Amplifier

The AGC amplifier circuit is described in detail in Section 2.6 of RS-1423(1006), XMC-839 Video and Decision Circuits. The components and parameters of this circuit which contribute to variations in detected receiver output are:

(1) The 26-volt ±5-percent reference diode which provides the fixed cathode voltage which biases the AGC amplifier beyond cutoff in the absence of detected receiver output.

(2) The variation of the grid to cathode cutoff voltage, E_{gco}, of the AGC amplifier tube.

The rms influence on detected receiver output caused by these two variables is calculated in Section 3.4 of this memorandum, and the results are plotted in Figure 3 of Section 1.0.

2.5 Quench Control Circuits

The control of quench pulses with the AGC voltage is described in detail in XMC-839 Range Gating Circuits. The response time of the quench generator to a change in AGC voltage is fast enough to only slightly increase the response time of the over-all AGC loop.

2.6 Response Time

The response of the XMC-839 AGC system to a step-function RF input to the receiver was measured by switching the RF input from receiver self-noise to -20 dbm CW with a square wave and photographing the envelope of the third video amplifier output, as presented on an oscilloscope externally synchronized with the modulating square wave. Response time (self-noise to -20 dbm CW input) was 60 milliseconds. Recovery time (-20 dbm to self-noise input) was 30 milliseconds. An enlarged plot of the oscilloscope photograph is presented in Figure 4.

The difference in the response and recovery times can be explained by a consideration of the video step functions involved in each case. For an RF input which steps from self-noise to -20 dbm CW, the video drive to the integrator-AGC amplifier circuits steps from a normalized nominal value of 1 to a saturation level of 3. Due to the AGC oscillation transients produced by a video step function of this magnitude, steady state is not achieved until about 60 milliseconds. When the RF input switches from -20 dbm CW to self-noise, however, the video step-function input to the integrator-AGC circuits is only from 1 to 0 on a normalized basis. This video step function, which is one half the amplitude of the previous case, results in much less transient AGC oscillation, and steady-state recovery is achieved in about 30 milliseconds. These response and recovery times are not affected significantly by the magnitude of the RF input step function, since any RF input +10 db or more above noise level causes transient video saturation

UNCLASSIFIED

[redacted]

Fig. 4

XMG-839 AGC SYSTEM RESPONSE TO STEP FUNCTION INPUT

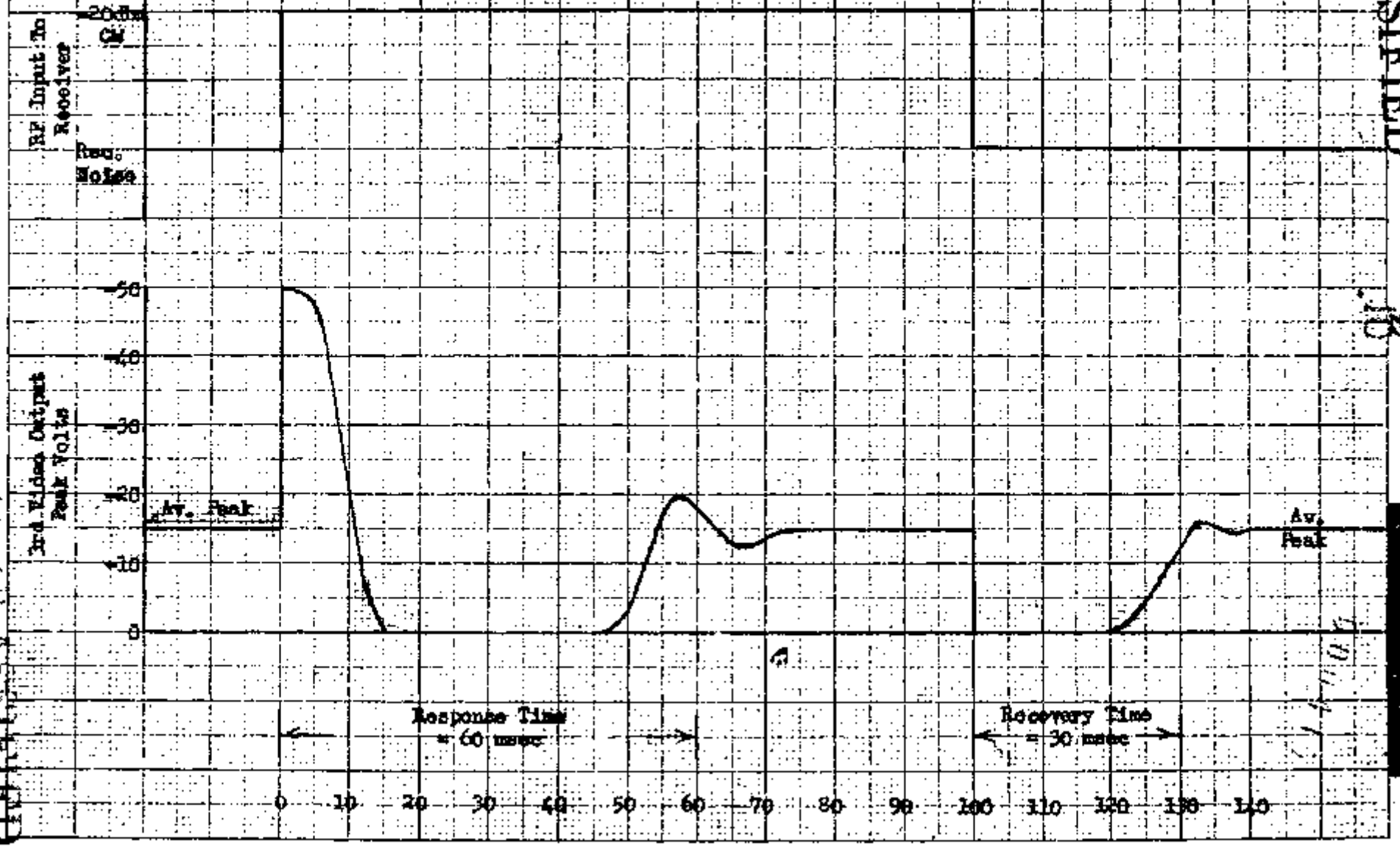

[redacted]

UNCLASSIFIED

3.0 Design Theory and Performance Comparison

3.1 Receiver

3.2 Detector

3.3 Video Amplifier, Gating, Stretching, and Integrating Circuits

Design theory and performance comparison data pertaining to the video amplifier, gating, stretching, and integrating circuits, are contained in Section 3.0 of RS-1423(1006), XMC-839 Video and Decision Circuits.

3.4 AGC Amplifier

The two parameters which influence the NO amplifier DC output, and hence the detected receiver output, are listed in Section 2.4 of this memorandum. The absolute voltage variation at the NO amplifier output caused by the two variables is:

(1) 26 v ±5-percent reference diode = ±0.75 v (±1σ)

(2) E_{geo} (estimated from tube curves = ±0.50 v (±1σ)

The ±2 σ NO amplifier output variation due to these two variables in combination is then,

$$\Delta \text{ NO Amplifier DC } (\pm 2\sigma) = \pm 2(0.75^2 + 0.50^2)^{1/2}$$

$$= \pm 1.80 \text{ volts}$$

A variation of ±2.0 volts has been plotted in Figure 3 to allow for the slight influence of video amplifier gain variations.

3.5 Quench Control Circuits (RDG)

Design theory and performance comparison data pertaining to the quench control circuits are contained in XMC-839 Range Gating Circuits.

3.6 Response Time

[redacted]

000419

UNCLASSIFIED

AUG 2 4 1959

12

Ref. Syn: L/23 (1005)

Copy to:
G. W. Rodgers, L/23 (10)

UNCLASSIFIED

[redacted]