ARM1.941209.176

Mrs Shroeder
These are manuscripts to be used as reports from Dr Ham

MEDICAL COLLEGE OF VIRGINIA

Department of Biophysics and Biometry

Office of Dr. William T. Ham, Jr.

To Dr. Litwin

[✓] For your information
[ ] For your recommendation
[ ] Please advise me
[ ] Please reply
[ ] with copy to this office
[ ] For your action
[ ] Please forward
[ ] Please return

Date 11-9-62 From William T. Ham, Jr.

Washington National Record Center
Office of the Army Surgeon General
Record Group 112
Accession #: 67A-4813
Box #: 47
File: Professor William T. Ham, Jr. MD-2241
Reports & Manuscripts

5/1/63

A Pulsed Source of High Intensity Light for the Production of Experimental Burns*

W. T. Ham, Jr., R. C. Williams, R. S. Ruffin, F. H. Schmidt,
H. A. Mueller, DuPont Guerry, III, W. J. Geeraets

Introduction

Past studies in this laboratory led to the development of a source and suitable techniques for the production and study of thermal lesions in the rabbit retina [1, 2]. This source was a high density carbon arc fitted with an ellipsoidal mirror 24 inches in diameter; a second ellipsoidal mirror reduced sufficiently the solid angle of convergent radiation to simulate the distant fireball of a nuclear weapon. This apparatus was capable of producing retinal irradiances in the rabbit eye of 70 cal/cm^2/sec.; for retinal image diameters of approximately 1.2 mm, mild lesions were produced in 20 milliseconds or less, corresponding to thermal doses of about 1 cal/cm^2.

The Xenon light source described in this paper was developed specifically to extend the range of thermal studies to higher irradiances and shorter exposure times so that the retinal hazards accompanying the detonation of nuclear weapons at high altitudes might be investigated in the laboratory. Mild lesions in the rabbit retina have been produced in less than 200 microseconds with the present apparatus. Thermal injury inflicted in such short exposure times is theoretically interesting because conduction may be neglected during the stage of energy input and because the type of lesion may differ somewhat from the more conventional burns produced during longer exposure times. In any event, it is hoped that the present extensions of time-temperature history to very short times and high temperatures will aid in the basic understanding of thermal injury.

Description of Apparatus

The light source consists of an Osram XBO-2001 high pressure Xenon lamp and an optical system closely resembling the Zeiss Light Coagulator [3, 4]. Electronic switching and control circuits have been developed so that the Xenon lamp may be pulsed to currents as high as 2150 amperes for short, accurately controlled, time periods. Exposure times in the range of 1 to 20 milliseconds are controlled with a Compur camera shutter. Shorter exposures are controlled by electronic timing and switching circuits.

Figure I illustrates the essentials of the optical system. The fast condenser lens**

****

*From the Department of Biophysics and Biometry and the Department of Ophthalmology, Medical College of Virginia. Major support for this research was provided by Contract DA-49-146-XZ-102 with the Defense Atomic Support Agency, Washington, D. C.

**We are indebted to Dr. Hans Littmann and the Zeiss Optical Company for loaning us this very fast lens which was manufactured especially for the present research.

Washington National Record Center
Office of the Army Surgeon General
Record Group 112
Accession #: 67A-4813
Box #: 47
File: Professor William T. Ham, Jr. MD-2244
Reports & Manuscripts

(4) focusses an image of the Xenon lamp on the aperture (6). An objective lens (7) focusses the image of the condenser lens on the cornea of the experimental eye, and it also focusses aperture (6) on the fundus. Thus, aperture (6) controls the image size of the light source on the fundus. Aperture (5), immediately adjacent to the condenser lens, serves to control the diameter of the cone of radiant energy on the cornea, thereby effectively controlling irradiance on the retina; in practice the pupillary diameter of the exposed eye must always be greater than this diameter. The concave mirror reflects light into the optical system and increases the retinal irradiance by about 70 per cent.

An electrically operated semaphore (3) serves to protect the condenser lens except during actual exposure. It is perforated with a circle of small holes which pass sufficient light for the operator to locate the image on a desired portion of the fundus. Since the semaphore is adjacent to the condenser lens, these "pinpoints" of light are focussed on the cornea when the eye is properly positioned. The Compur shutter (8) controls the exposure time in the range of 2 to 20 milliseconds or greater. Although it is designed with click stops for the various time settings, it has been found feasible to set the shutter between stops for intermediate times. The flash synchronizing contacts are connected to an electronic timer which measures the actual exposure time to an accuracy of 0.1 millisecond. Since there is a variation of about ± 10 per cent in the exposure time of the Compur shutter, it is necessary to record the actual exposure time for each individual shot.

A diagram of the electronic system is given in Figure II. The basic components are: a Tesla coil-ignition unit, a 0-70 ampere "keep alive" power supply, a 5000 - 20,000 mfd. capacitor bank, a timing generator and a pair of Ignitrons with associated circuitry for initiating and terminating the current pulse to the lamp. A Hewlett-Packard Model 218A digital delay generator furnishes a rectangular voltage pulse whose duration can be adjusted from 1 microsecond to 10 milliseconds in steps of 0.1 microsecond. The rectangular wave is passed through a differentiating circuit to obtain a positive pulse at the leading edge and a negative pulse at the trailing edge. The positive pulse triggers the "start" Thyratron, which in turn triggers the "start" Ignitron. Thus the circuit between the lamp and the condenser bank is closed. The positive and negative pulses from the differentiation circuit pass through a phase inverter and thence to the "stop" Thyratron grid. Since a Thyratron can be triggered only by a positive pulse, the "stop" Thyratron will respond only to the "stop" pulse, and will ignore the "start" pulse. The "stop" Ignitron is in turn triggered and acts as a short circuit to discharge the capacitor bank, thus terminating the current pulse to the Xenon lamp.

Washington National Record Center
Office of the Army Surgeon General
Record Group 112
Accession #: 67A-4813
Box #: 47
File: Professor William T. Ham, Jr. MD-2244
Reports & Manuscripts

The capacitor bank consists of 4 sections of 60, 80 mfd., 450 volt capacitors wired in parallel with short heavy leads. When working with relatively long duration, low current pulses in the millisecond range, it is convenient to substitute a storage battery bank in place of the capacitors. When this is done, a fuse, connected in series with the battery bank is blown at the end of the pulse by the "stop" Ignitron. The fuse holder consists of two heavy copper blocks against which an aluminum ribbon is clamped. It can be replaced in a few seconds. The "keep alive" power supply is necessary to keep the lamp burning at a low level between pulses. It can deliver up to 70 amperes and can be used without the pulsing circuits for low irradiance work.

The digital delay generator is triggered by a pair of contacts on the Compur shutter, so that the light pulse occurs only when the Compur shutter is completely open. The Compur shutter remains open for approximately 3 milliseconds. By operating the lamp at the lowest possible current consistent with arc stability, the retinal dose due to the 3 millisecond "keep alive" exposure can be kept to less than 1 per cent of the retinal dose due to the high intensity pulse.

Operation and Physical Characteristics

Current pulses were measured by placing an oscilloscope across a 50 mv. 30 ampere shunt connected in series with the lamp. Light output pulses were measured with a 7102 photomultiplier tube having maximum response in the near infrared. (S1 response curve). These pulses are illustrated in Figure 3. Below each current pulse is given the corresponding light output pulse. It will be noted that the lamp requires approximately 75-100 microseconds to attain maximum brilliance and approximately 100-150 microseconds to decay. In the case of the 50 microsecond pulse (time between delay generator pulses), the light output never reaches a maximum, and the departure from a rectangular wave is marked. The leading edge of the pulse can be sharpened by discharging through the lamp a capacitor charged to a suitably high potential. The decay time, on the other hand, seems to be characteristic of the lamp and represents the time required for the incandescent Xenon gas to stop radiating. The pulse shapes obtained happen to be well suited for studies of nuclear weapons hazards, so that it has not been necessary to resort to pulse shaping techniques. Correction factors for pulse shapes are used when calculating dose.

Of prime concern in a high intensity light source are the spectral distribution and the irradiance for each lamp current used. These measurements were taken with a calibrated grating monochrometer and photomultiplier tube. The grating monochrometer was calibrated with an Eppley thermopile black body receiver and a standard tungsten

Washington National Record Center
Office of the Army Surgeon General
Record Group 112
Accession #: 67A-4813
Box #: 47
File: Professor William T. Ham, Jr. MD-2244
Reports & Manuscripts

lamp operated at a known color temperature. Tables of tungsten emissivity were used to obtain light output as a function of wavelength. Appropriate sharp cutoff filters were used to eliminate second order response. Calibrations were taken every 10 mμ over the range of 350 - 1400 mμ. The photomultiplier tube was calibrated on a relative basis over a range of 350 - 1100 mμ by comparing its steady state response against that of the thermopile at 10 mμ intervals. Absolute calibration of the photomultiplier was performed at 560 mμ, using a narrow band pass filter. The 560 mμ beam was measured first with the Eppley thermopile, and then with the photomultiplier tube; the Eppley instrument had been calibrated previously on an absolute basis against a National Bureau of Standards carbon filament lamp (standard of total irradiance). The enormous sensitivity of the photomultiplier tube made it necessary to attenuate the beam with neutral density filters. These filters remained with the photomultiplier throughout the entire calibration and measurement procedures. A photomultiplier tube, calibrated in this manner, is considered superior to other types of calorimeters for the measurement of very short high irradiance pulses because of its speed of response.

Spectral distribution of the light source was obtained for lamp currents from 60 amperes to 2150 amperes. Each distribution was taken at 10 mμ intervals from 350 - 1000 mμ. The results are given in Table 1. Distributions for 60, 1000 and 2150 amperes are shown in Figure 4. All three distributions have been normalized to the same peak height. It should be noted that there is a marked shift toward shorter wavelengths with increasing lamp current. The shift is most pronounced when going from 60 amperes to 200 amperes. This shift into the visible portion of the spectrum is helpful for studies of retinal hazards, since the transmission through the ocular media is highest in this region (5).

For currents up to 70 amperes, corneal irradiance was measured with the Eppley thermopile. In this current range the lamp can be burned continuously, allowing an accurate thermopile reading. The pulsing circuit is employed for higher currents, and the photomultiplier tube used for irradiance measurements. The results are given in Table 2, and are plotted in Figure 5. Corneal irradiances in cal/cm^2/sec. are given for an image field diameter of 6°. Retinal irradiances listed in the last column are based on the following conditions:

1 cm. focal length rabbit eye

8 mm diameter of light beam at cornea

92% effective transmission of light through ocular media for pulse currents greater than 100 amperes*

*For dc operation at 20 to 60 amperes, effective transmission is 85%.

Washington National Record Center
Office of the Army Surgeon General
Record Group 112
Accession #: 67A-4813
Box #: 47
File: Professor William T. Ham, Jr. MD-2244
Reports & Manuscripts

6° cone of convergent radiation

1.05 mm retinal image diameter

The relationship between corneal and retinal irradiance may be expressed as follows:

$$I_r = \frac{I_c \times K \times d_c^2}{d_r^2} \quad \text{---------- (1)}$$

where I_r = retinal irradiance in cal/cm^2/sec.

I_c = corneal irradiance in cal/cm^2/sec.

K = transmissivity for the ocular media and a given spectral distribution of the incident beam

d_c = diameter of light cone at cornea

d_r = diameter of light cone at retina

Using a lamp current of 1950 amperes, the measured irradiance at the cornea was 53.6 cal/cm^2/sec. For a rabbit eye (1 cm. focal length), the irradiance at the retina was calculated to be 2867 cal/cm^2/sec.; this is to be compared with a rabbit retinal irradiance of 115 cal/cm^{2}sec. produced by the Zeiss light coagulator when operated at maximum current. (Red 4 position).

As normally used in clinical applications, the Zeiss light coagulator produces a markedly non-uniform retinal image. There are two "hot spots" at opposite edges of the illuminated field. One is due to the very bright spot adjacent to the sharply pointed negative electrode in the Xenon lamp; the second is due to an image of the hot spot from the concave mirror mounted behind the lamp. For clinical work this apparently has not proven objectionable, but for studies of retinal hazards due to nuclear weapons it is highly desirable to have a uniformly irradiated retinal image, so that the thermal dose can be expressed with accuracy and meaning. This has been achieved by positioning the Xenon lamp in relation to the optical system so that the negative electrode hot spot is outside the retinal image. Uniformity was measured by scanning an enlarged retinal image obtained with a long focal length lens. Relative irradiance along a vertical and horizontal scan are shown in Figure 6. Maximum variation is within 10 percent of the irradiance at the center of the image. This distribution applies to the data on corneal and retinal irradiances given in Table 2 and Figure 5. Considerably higher irradiances can be obtained over small areas by moving the hot spot into

Washington National Record Center
Office of the Army Surgeon General
Record Group 112
Accession #: 67A-4813
Box #: 47
File: Professor William T. Ham, Jr. MD-2244
Reports & Manuscripts

the image field. No measurements of irradiance have been taken under these conditions.

Although the Osram XBO-2001 Xenon lamp is rated at 75 amperes, no difficulties have been encountered in pulsing the lamp to currents greater than 2000 amperes. The lamp presently in use has been pulsed many hundreds of times with no visible tungsten deposits on the quartz bulb, and no pitting or distortion of the electrodes. Between pulses the lamp is operated at the lowest possible current consistent with lamp stability (approx. 15 amperes). At 2000 amperes the lamp can be pulsed for periods up to 1 millisecond without apparent damage or appreciable shortening of life.

Summary

A method is described for pulsing electronically an Osram XBO 2001 high pressure Xenon lamp. Currents up to 2150 amperes may be passed through the lamp for time durations of 1 millisecond or less. Utilizing the optical system first developed by the Zeiss Optical Company for light coagulation, irradiances as high as 53.[illegible] cal/cm^2/sec. can be delivered to the cornea. In the rabbit, retinal irradiances of 28[illegible] cal/cm^2/sec. have been obtained. Pulse durations as short as 175 m[illegible] (including rise and decay time) have been used to produce mild lesions on the rabbit retina. The instrument is being used to investigate the optical hazards accompanying short pulses of radiant energy similar to those emitted by nuclear weapons when exploded at high altitudes.

Washington National Record Center
Office of the Army Surgeon General
Record Group 112
Accession #: 67A-4813
Box #: 47
File: Professor William T. Ham, Jr. MD-2244
Reports & Manuscripts

TABLE I

XBO-2001 SPECTRAL DISTRIBUTION VS. TUBE CURRENT

For each value of current, Table gives percentage of total energy in each wave length interval

λ in Mμ / LAMP CURRENT AMPS.	< 400	400 - 500	500 - 600	600 - 700	700 - 800	800 - 900	900 - 1000
60	.23	9.2	14.1	15.1	13.9	22.0	25.5
200	.47	8.7	18.1	22.2	24.6	21.0	5.0
400	.99	10.4	19.5	26.7	24.6	15.4	2.5
600	.59	11.1	21.0	27.7	24.9	12.8	1.9
800	.69	13.1	21.5	27.1	24.0	12.0	1.8
1000	.86	14.3	22.9	28.2	22.5	10.1	1.27
1200	.80	15.4	24.1	27.9	22.4	8.6	.80
1400	.60	16.8	24.6	27.3	21.7	8.0	1.00
1600	.80	16.5	25.0	28.2	21.3	7.5	.70
1800	.90	16.5	25.3	29.2	20.2	7.1	.80
2150	.68	17.2	25.1	28.5	22.1	6.3	.70

Washington National Record Center
Office of the Army Surgeon General
Record Group 112
Accession #: 67A-4813
Box #: 47
File: Professor William T. Ham, Jr. MD-2244
Reports & Manuscripts

Table 2

Irradiance vs. Lamp Current

	Capacitor Voltage	Lamp Current Amps	ϕc Corneal Irrad. $cal/cm^2/sec.$	ϕr Retinal Irrad. $cal/cm^2/sec$
	-	20	.31	15.3
	-	25	.43	21.2
	-	30	.545	26.8
	-	35	.68	33.5
Continuous	-	40	.79	38.9
Operation	-	45	.915	45.0
of Lamp	-	50	1.05	51.7
	-	55	1.19	58.5
	-	60	1.33	65.4
	-	65	1.45	71.3
	-	70	1.64	80.7
	100	370	22.4	1198
	125	540	28.2	1509
Pulse	150	750	34.1	1824
Operation	175	960	39.9	2135
of Lamp	200	1135	42.7	2284
	225	1360	47.8	2557
	250	1560	50.3	2691
	275	1740	52.8	2825
	300	1950	53.6	2867

Washington National Record Center
Office of the Army Surgeon General
Record Group 112
Accession #: 67A-4813
Box #: 47
File: Professor William T. Ham, Jr. MD-2244
Reports & Manuscripts

Components List for Circuit Diagram
in Figure II

R_1, R_2, R_{16}, R_{17}	- 25K 10W wire wound
R_3, R_{18}	- 3 ohm 25W wire wound
R_4, R_{24}	- 1K 1/2W
R_5, R_{19}	- 100K 1W
R_6, R_7, R_{20}, R_{21}	- 25K 10W wire wound
R_8, R_{22}	- 1500 ohm 2W
R_9, R_{23}	- 10K WW pot
R_{10}, R_{11}	- 100K 1W
R_{12}, R_{15}	- 27K 2W
R_{13}	- 10K 1W
R_{14}	- 1500 ohm 1W
C_1, C_{10}	- 10 μf 1000V oil filled
C_2, C_{11}	- 52 pf mica
C_3, C_4	- 4 μf 600V oil filled
C_5, C_{12}	- 40 μf 150V electrolytic
C_6, C_7, C_8, C_9	- 3300 pf mica
T_1, T_2	- 720V C.T. at 100 ma
T_3, T_4	- 5V 10A 5000V ins. filament transformers for 5560 Thyratrons (not shown on diagram)
D_1, D_2	- RCA 1N1763
D_3, D_4	- Sarkes Tarzian 30 VAN
S_1	- Heavy duty knife switch (100A)
S_2	- Heavy duty push button switch (100A)
SH_1	- 50 mv/100A shunt
SH_2	- 50 mv/30A shunt

Washington National Record Center
Office of the Army Surgeon General
Record Group 112
Accession #: 67A-4813
Box #: 47
File: Professor William T. Ham, Jr. MD-2244
Reports & Manuscripts

List of Figures

I. Diagram of optical system.

II. Photograph and circuit diagram of pulsed light source.

III. Current pulses and corresponding light output pulses for Osram XBO 2001 lamp as recorded on oscilloscope. 50, 100, 200 sec. pulses refer to the time delay between pulses furnished by the digital delay generator. Each block along abscissa represents 50 μ seconds.

IV. Spectral distribution of light source for various currents.

V. Corneal irradiance vs. tube current.

VI. Variation of irradiance over the retinal image.

Solid line - vertical scan

Dashed line - horizontal scan.

VII. Photograph of Xenon light source with digital delay generator and oscilloscope for pulse measurements.

Washington National Record Center
Office of the Army Surgeon General
Record Group 112
Accession #: 67A-4813
Box #: 47
File: Professor William T. Ham, Jr. MD-2244
Reports & Manuscripts

RETINAL IMAGE UNIFORMITY

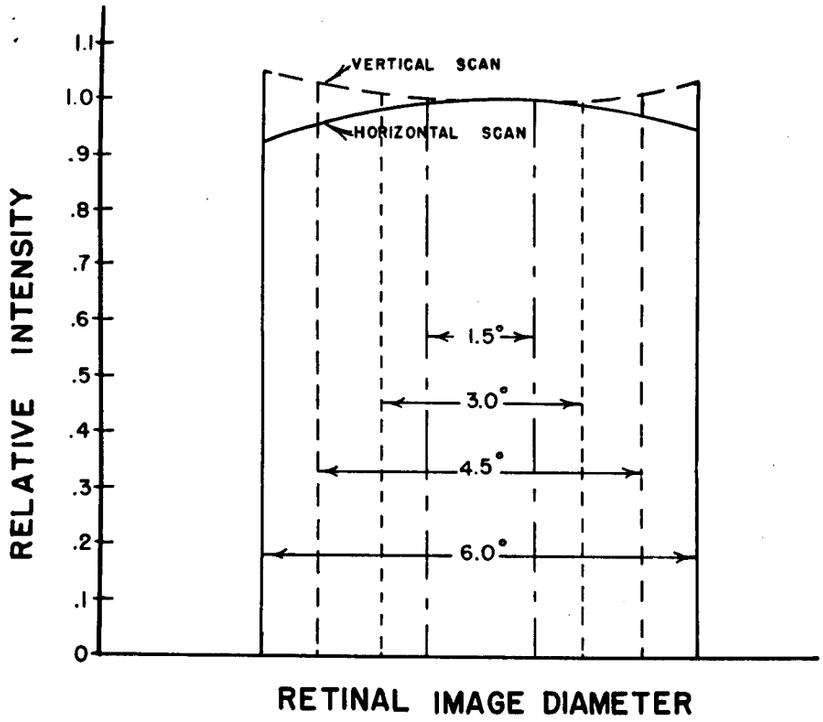

SCHEMATIC DIAGRAM OF OPTICAL SYSTEM

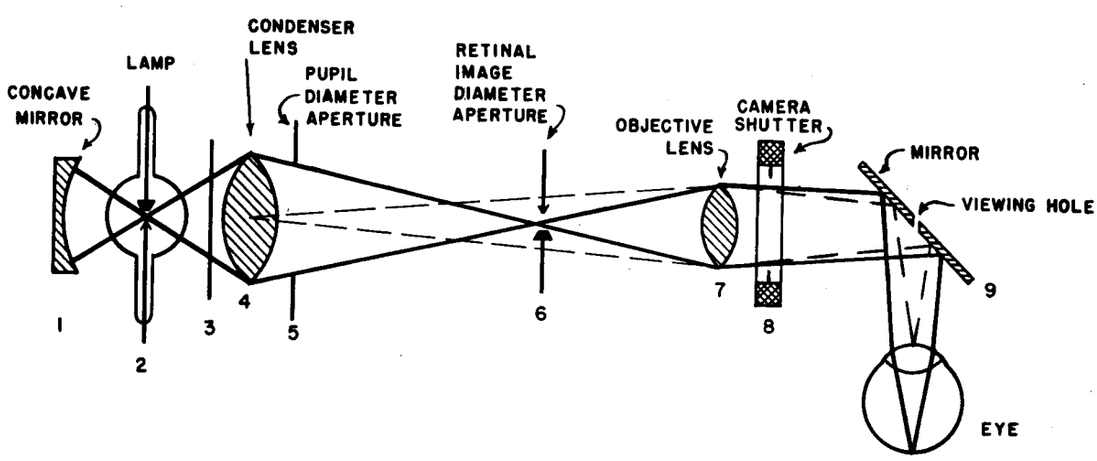

Washington National Record Center
Office of the Army Surgeon General
Record Group 112
Accession #: 67A-4813
Box #: 47
File: Professor William T. Ham, Jr. MD-2244 Reports & Manuscripts

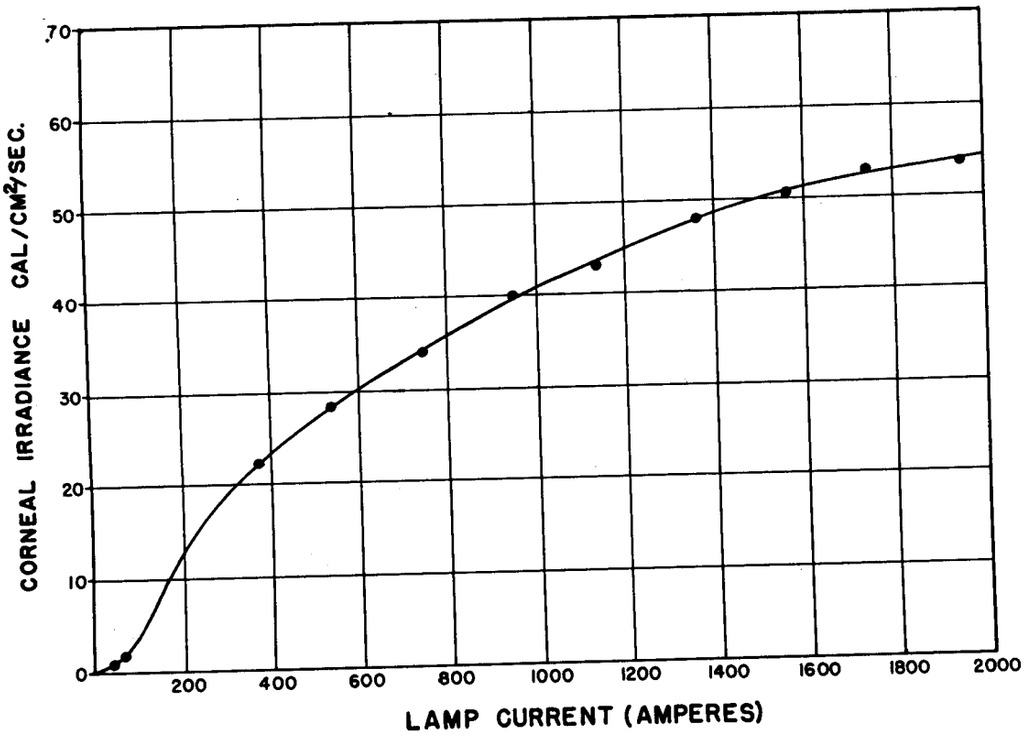

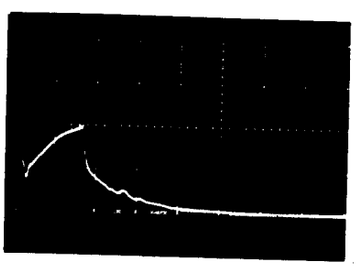

50 μ SEC. CURRENT PULSE

100 μ SEC. CURRENT PULSE

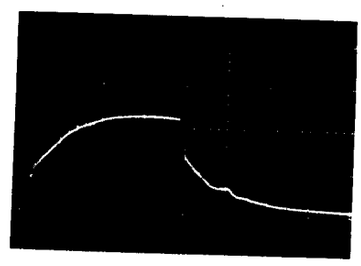

200 μ SEC. CURRENT PULSE

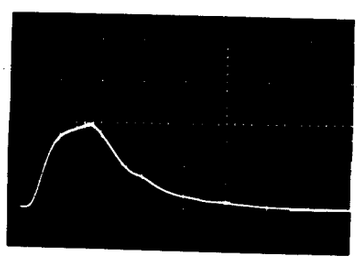

50 μ SEC. LIGHT PULSE

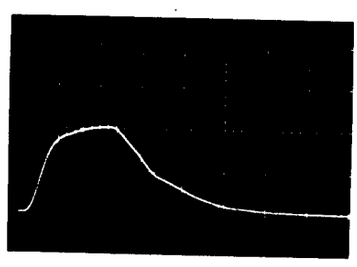

100 μ SEC. LIGHT PULSE

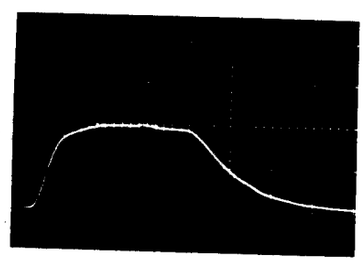

200 μ SEC. LIGHT PULSE

Washington National Record Center
Office of the Army Surgeon General
Record Group 112
Accession #: 67A-4813
Box #: 47
File: Professor William T. Ham, Jr. MD-2244
Reports & Manuscripts

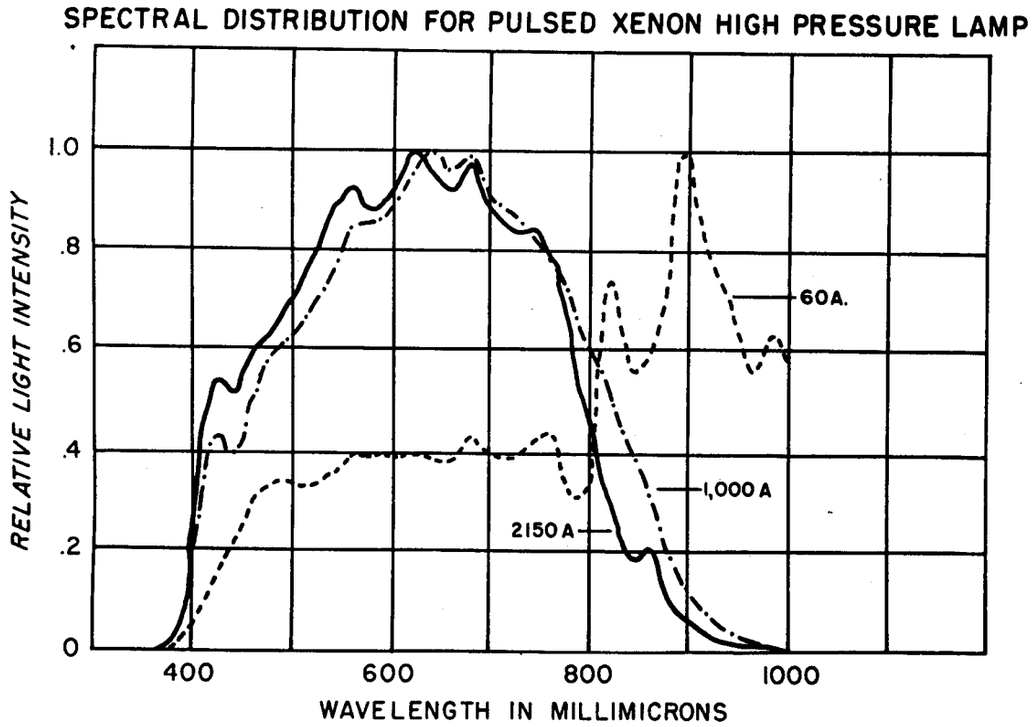

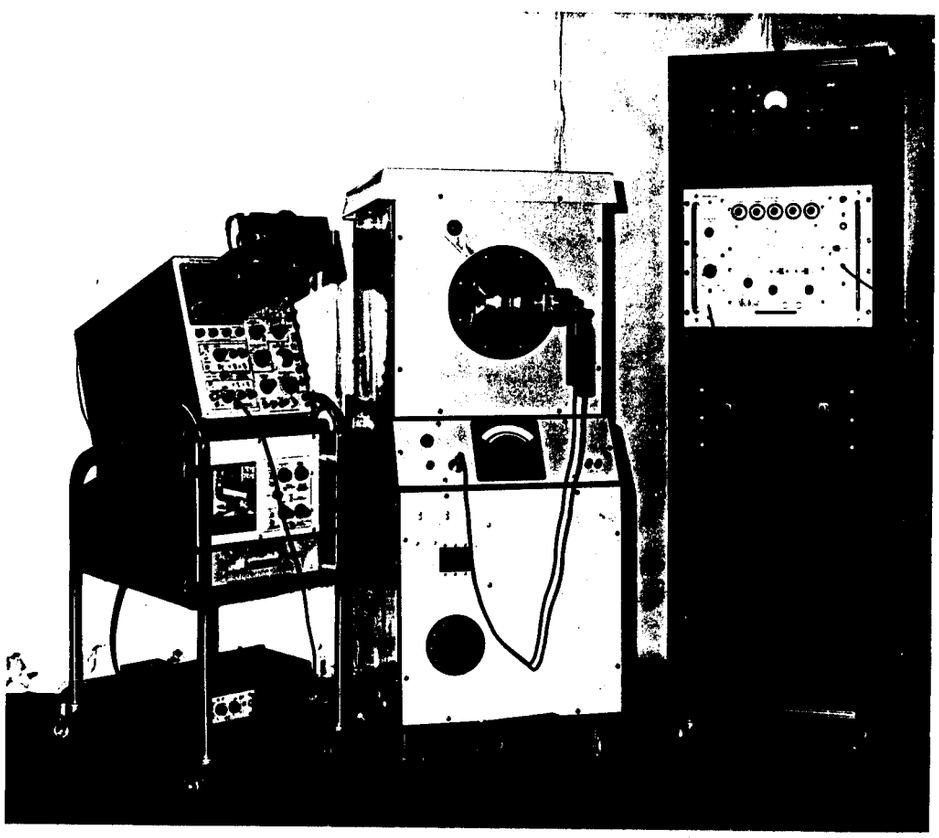

Washington National Record Center
Office of the Army Surgeon General
Record Group 112
Accession #: 67A-4813
Box #: 47
File: Professor William T. Ham, Jr. MD-2244
Reports & Manuscripts

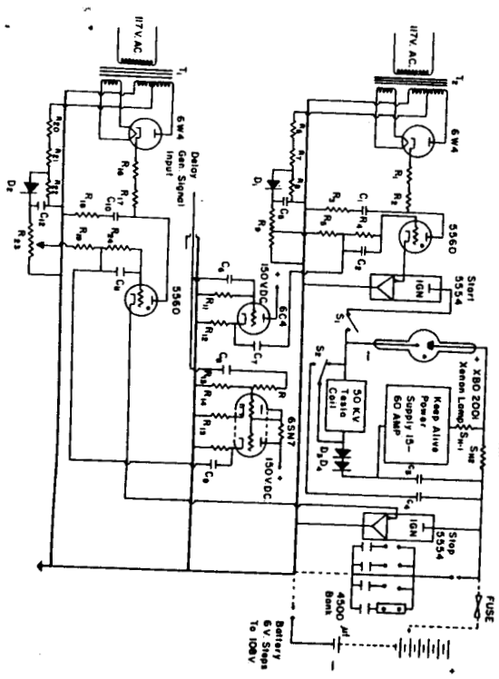

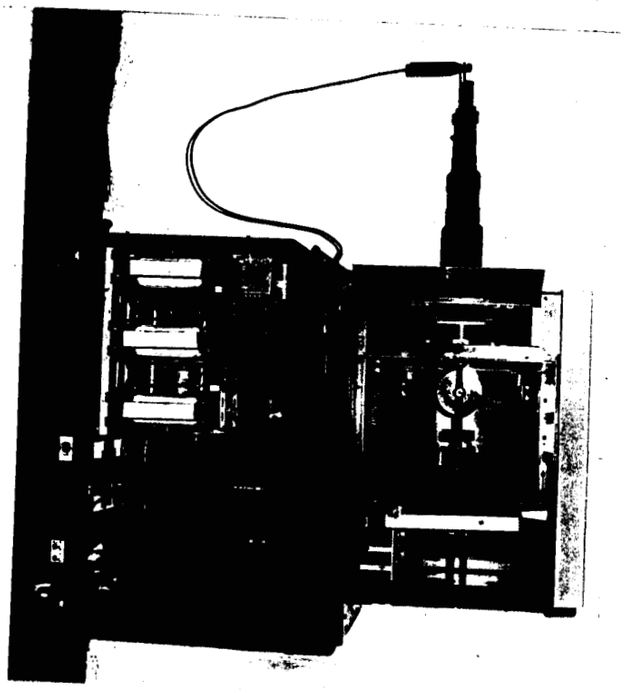

Washington National Record Center
Office of the Army Surgeon General
Record Group 112
Accession #: 67A-4813
Box #: 47
File: Professor William T. Ham, Jr. MD-2244
Reports & Manuscripts

References

1. Ham, W. T., Jr., Wiesinger, H., Guerry, D., Schmidt, F. H., Williams, R. C., Ruffin, R. S., and Shaffer: Experimental Production of Flash Burns in the Rabbit Retina. Am. Journal Ophthalmology 43, 5 (May 1957).

2. Ham, W. T., Jr., Williams, R. C., Schmidt, F. H., Wiesinger, H.; Production of Flash Burns in the Rabbit Retina: As a Means of Evaluating the Retinal Hazard from Nuclear Weapons. Am. Journal Ophthalmology, 46, 5 (November 1958).

3. G. Meyer-Schwickerath: v. Graef. Arch. 156, 2-34 (1954)

4. H. Littmann: The Zeiss Light Coagulator after Meyer-Schwickerath with Xenon High Pressure Lamp. Bericht über die 61. Zusammenkunft der Deutschen Ophthalmologischen Gesellschaft in Heidelberg 1957. pp. 311-314

5. Wiesinger, H., Schmidt, F. H., Williams, R. C., Tiller, C. O., Ruffin, R. S. Guerry, D.: The Transmission of Light Through the Ocular Media of the Rabbit Eye. Am. Journal Ophthalmology, 42, 6 (Dec. 1956).

Washington National Record Center
Office of the Army Surgeon General
Record Group 112
Accession #: 67A-4813
Box #: 47
File: Professor William T. Ham, Jr. MD-2244
Reports & Manuscripts