729838

R

BEST COPY AVAILABLE

1259881

CONFIDENTIAL

Division 11

NATIONAL DEFENSE RESEARCH COMMITTEE

of the

OFFICE OF SCIENTIFIC RESEARCH AND DEVELOPMENT

Final Report on "Analysis and Degradation Study of Salcomine"

to

October 1, 1943

by

E. I. du Pont de Nemours and Company

Report OSRD No. 1951

Copy No. 41

Date: October 25, 1943

Copy Nos.

1-28 Dr. Irvin Stewart
29 Air Corps Liaison Officer with NDRC
30 Chief, Bureau of Ships
Attention: Comdr. R. V. Kleinschmidt
31-32 Commanding General, Army Air Forces - Wright Field
Attention: Engineering Division, NDRC Liaison Officer
Captain J. P. AuWerter
33 Office of the Chief of Engineers, Corps of Engineers
Attention: NDRC Liaison Officer
34 Director, Naval Research Laboratory
35 Col. L. E. Griffis, Room 4105 - Munitions Building
36 Chief, Bureau of Aeronautics
Attention: Lt. Comdr. J. E. Sullivan
37 Mr. E. P. Stevenson
38 Mr. A. E. Marshall
39-40 Dr. S. S. Prentiss
41 Dr. Melvin Calvin
42 Division 11 Files
43
44
45
46
47
48
49
50

CONFIDENTIAL

Total Number of Copies - 50

1259882

OSRD No. 1951

CONFIDENTIAL

Division 11
NATIONAL DEFENSE RESEARCH COMMITTEE
of the
OFFICE OF SCIENTIFIC RESEARCH AND DEVELOPMENT
Section 11.1

Final Report on "Analysis and Degradation Study of Salcomine"
Service Directive NL-B42

Endorsement (1) From E. P. Stevenson, Chief, Division 11 to Dr. Irvin Stewart, Executive Secretary of the National Defense Research Committee.

Forwarding report and noting:

> "This report may be considered as Part II of the du Pont work on the Salcomine program; it presents a detailed study of the degradation of Salcomine, including methods of analysis. Part I (OSRD No. 1616) treats of engineering aspects of oxygen generation from Salcomine."

This is a final report under Contract 11-309, OEMsr-604 with E. I. du Pont de Nemours and Company.

CONFIDENTIAL

1259883

CLASSIFIED - CONFIDENTIAL

INDEX

	Page
I. Introduction	1
II. Summary	2
III. Experimental: Analytical Procedures and Results	3
A. Elemental Analyses	3
1. Total Oxygen	3
2. Total Nitrogen	4
3. Total Cobalt	4
4. Volatile at 110°C.	5
5. Capacity	5
B. Distillation Analyses	6
1. Aldehyde	6
2. Steam Volatile Acid for Aldehyde Correction	6
3. Aqueous Acid Insoluble	7
4. Residual Acid	7
5. Ammonia	7
6. Ethylenediamine	8
7. Carbon Dioxide	8
8. Residual Acid	8
9. Residual Nitrogen	8
C. Reactions with Karl Fischer Reagent	12
1. Apparent Water	12
2. Free Water	13
D. Desorption and Absorption of Oxygen by Salcomine	15
E. Potentiometric Titrations	16
1. Oxidized Salcomine	16
2. Deoxidized Salcomine	16
F. Alkali Absorption by Salcomine	26
IV. Discussion	27
V. Mechanism of Degradation to Form Fragments	29
VI. Recommended Procedure for Chemical Analysis of Degraded Salcomine	30

This document contains information affecting the national defense of the United States within the meaning of the Espionage Laws, 31 and 32. Its transmission or the revelation of its contents in any manner to an unauthorized person is prohibited by law.

1259884

CLASSIFIED CONFIDENTIAL

FORMAL REPORT

on

THE ANALYSIS OF SALCOMINE

Official Investigator: A. T. Larson
Authors: D. M. Smith, E. C. Ashby

I. INTRODUCTION

Salcomine can become inactive by both physical and chemical changes. At least one inactive form, "inert red isomer", has been identified. In practice, the most probable reagents for the degradation of Salcomine are water and oxygen. Consideration of the structure and properties of Salcomine indicate that water alone should have little deleterious effect; oxygen, however, particularly in the presence of water, might give rise to a number of reactions, any of which would result in inactive products that initially differed little in formula from the original material,

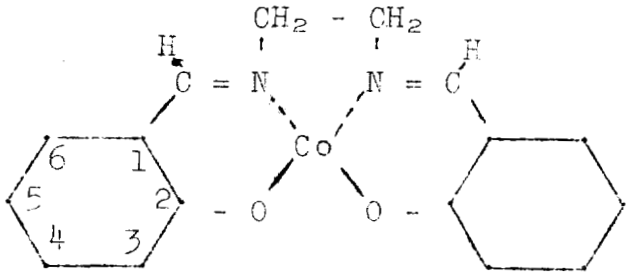

It seems apparent from the data presented in the reports of Calvin and Diehl, respectively, that introduction of oxygen as hydroxyl on the aromatic nucleus in positions 3, 4, 5 or 6 should result in an inactive material, as does irreversible oxidative addition of hydroxyl to the cobalt. Irreversible severance of any bond or addition of oxygen at any bond outside the aromatic ring would almost certainly deactivate the molecule. In other words, any reaction whereby oxygen is added irreversibly to the Salcomine molecule should result in an inactive compound.

The analysis of degraded Salcomine should provide information on the amount of undegraded material remaining and on the natures and amounts of the various degradation substances which may include inert isomers as well as end products of a series of reactions.

This report presents details on the procedures which have been developed to date for the quantitative analysis of Salcomine. The application of these procedures

[illegible] contains [illegible] information affecting the [illegible] of the [illegible] United States within the meaning of the [illegible] its contents in any manner to an unauthorized person is prohibited by law.

1259885

to the analysis of a series of samples progressively degraded under carefully controlled conditions may lead to a clearer understanding of the mechanism of degradation under the conditions chosen.

It should be remembered that Salcomine samples, particularly those degraded in large equipment, may not be homogeneous; furthermore, Salcomine may change in composition on long standing at room temperature as indicated by decrease in capacity.

In this report two samples of undegraded (SL-174 and Rumford C.P.) and two samples of degraded (L-1 and L-2) Salcomine have been studied in some detail. A description of these samples is contained in Table I.

Section I
Table I

Sources of Salcomine Samples Studied in this Report

No.	Name	Date Rec'd	Description
1	SL-174	8/17/42	Rumford Salcomine, part of large shipment for semi-works study by DuPont
2	Rumford CP*	6/15/43	Used in preparation of standard degraded samples
3	L-1**	12/23/42	Rumford High-high Salcomine Shallow bed, 1350 cycles, 80# psi and 1 atm., M.I.T. 25% of original saturation at 1350 cycles
4	L-2**	12/23/42	Rumford High-high Salcomine Deep bed, 800 cycles, 80# psi and 1 atm., M.I.T. 54% of original saturation at 800 cycles

*Refer letter, W. E. Catterall to D. M. Smith, 6/12/43
**Refer letter, F. S. Bacon to A. T. Larson, 12/16/42

II. SUMMARY

1. Methods are presented for the quantitative analysis of Salcomine.

1259886

2. Four samples were analyzed by these methods and the results interpreted as follows (compositions in moles per ten moles of cobalt):

Sample	% Max. Capacity*	Compounds of Salcomine Formula**	Fragments				
			Aldehyde	Acid	Ammonia	Degraded Aldehyde	Cobalt
SL-174 (Undegraded)	83	9.2	0.8	0.6	0.8	0.2	0.8
Rumford CP (Undegraded)	80	9.3	0.3	0.5	0.5	0.4	0.7
L-1 (Degraded)	9	6.8	1.2	2.6	4.5	2.6	3.2
L-2 (Degraded)	12	7.4	1.4	3.5	3.5	0.3	2.6

3. The great disparity between the % maximum capacity and the content of compounds of Salcomine formula indicated the presence of inert "isomers". These "isomers" should have the general structural arrangement of active Salcomine but probably were at least partially in the cobaltic form and possibly contain water of hydrolysis.

4. A mechanism is proposed for the formations of the observed degradation fragments.

5. A procedure is recommended for the chemical analysis of degraded Salcomine.

III. EXPERIMENTAL: ANALYTICAL PROCEDURES AND RESULTS

A. Elemental Analyses

Direct analyses were made for total oxygen, nitrogen and cobalt, respectively, as well as for per cent volatile at 110°C. and capacity.

(1) Total Oxygen

The oxygen was determined by a modification of Ter Meulen's procedure*** in which 100-150 mg. of sample

- - - - -

*% Max. Capacity was defined as (mg. O absorbed per 10 mml. Co) ÷ 160 (Section IIIA, Table III).

**See paragraph 3.

***See Cramer, Sjothun and Oneacre, Pro. Rub. Tech. Conf., 572 (1938).

1259887

was heated first in a stream of dry hydrogen at 200°C. to remove all volatile material (which was discarded), after which the sample was heated in hydrogen above 400°C. until completely decomposed. The decomposition gases were passed slowly over a nickel hydrogenation catalyst and then through a trap at -80°C. which retained all the moisture and little else. When decomposition was complete, the trap was evacuated at 10^{-3} mm. at -80°C. to remove hydrogen; the volume of water vapor in the trap was then measured at constant temperature and pressure (below saturation) and finally tested for purity by absorption in a P_2O_5 tube. The analyses, in order of their determination, were as follows:

Sample	No. Determinations	Wt. % Oxygen (Ave. Value)
SL-174	4	9.6 ± 0.2
L-1	3	13.2 ± 0.6
SL-174	1	9.6
L-2	2	11.1 ± 0.1
SL-174	1	9.3

The observed value for SL-174 (9.6%) corresponded to a molecular weight of 333 (9.5% ≡ 337) as compared to 339 from the corresponding cobalt analyses below.

(2) Total Nitrogen

3.0 grams of sample was weighed into an 800 ml. Kjeldahl flask, then 50 ml. of 6N sulfuric acid plus 400 ml. of water was added. The water and aldehyde were removed by slow concentration over an open flame. When the sample started to decompose, 20 ml. of concentrated sulfuric acid, 5.0 grams of potassium sulfate, plus a pinch of copper selenate catalyst were added. The sample was then digested over a very hot flame for 3 hours. After complete digestion the sample was cooled, 250 ml. of water and 200 ml. of 30% NaOH added, and the ammonia was steam distilled from the alkaline solution. The distillate was collected in 50 ml. of 0.5N hydrochloric acid solution, and the ammonia determined by back titration with 0.5N sodium hydroxide to methyl red indicator.

(3) Total Cobalt

3.0 grams of sample was weighed directly into a tared platinum dish and 75 ml. of 2N sulfuric acid added. The sample was then evaporated to dryness under an infrared lamp. The dry sample was placed in a constant temperature muffle furnace at 400°C. and treated several times with a few drops of 6N sulfuric acid, heating after each treatment,

1259888

until a clean red, homogeneous salt was obtained. The sample was finally heated to constant weight, then weighed as cobaltous sulfate.

A platinum dish containing no sample was used as a tare in weighing.

400°C. was used as the maximum safe temperature at which $CoSO_4$ was stable.

The molecular weights were calculated as the grams of sample required to contain one gram-atom of cobalt. Thus, "10 mml. of sample" meant that weight of material containing 10 mml. of cobalt.

(4) Per Cent Volatile at 110°C.

3.0 grams of sample was weighed into a tared tall form glass capped weighing bottle and heated in a constant temperature oven in a slow stream of nitrogen for 90 minutes at 110°C. While still hot the cap was placed on the bottle which was then allowed to cool in a nitrogen desiccator and finally weighed (tightly stoppered) against the tare.

(5) Capacity

The deoxidized sample from (4) above was then placed in an oxygen desiccator and the cap removed. After standing overnight the sample was recapped and weighed. (The sample was then titrated with Karl Fischer reagent as discussed in Section IIIC.)

Notes on Elemental Analyses

(2) Total Nitrogen

Using the standard procedure on pure compounds, the following results were obtained:

Sample	Theor. % N	Recovered % N
Benzamide	11.57	11.50
Salicylamide	10.22	10.15
Ethylenediamine	31.70	31.60, 31.70

(3) Total Cobalt

Using the standard procedure on pure $CoCl_2 \cdot 6\ H_2O$ the recovered % Co was 24.87 as compared with 24.77 theoretical.

1259889

Section IIIA
Table I

Elemental Analyses on Salcomine* (All analytical values expressed in weight per cents)

No.	Sample	Total Oxygen	Total Nitrogen	Total Cobalt	Loss at 110°C.	Total C & H by Diff.	Mol. Wt. from Co Content	Capacity**
1	SL-174	9.6 ± 0.2	8.0 ± 0.0	17.4 ± 0.0	4.7 ± 0.0	60.3	339	3.9 ± 0.0
2	Rumford CP		7.9 ± 0.0	17.5 ± 0.0	4.6 ± 0.1		336	3.8 ± 0.0
3	L-1	13.2 ± 0.6	7.6 ± 0.0	17.6 ± 0.0	3.6 ± 0.2	58.0	335	0.44 ± 0.01
4	L-2	11.1 ± 0.1	7.5 ± 0.0	17.4 ± 0.0	4.9 ± 0.1	59.1	340	0.56 ± 0.03
Theoretical		9.4	8.2	17.3	4.7	60.4	341	4.7

*All determinations in duplicate

**In a recycling test, using the technique of E. Field (Formal Report on Salcomine, 6/3/43) the Rumford C.P. sample gave 4.6% initial loss and absorptions of 4.0, 4.0, 4.0%, indicating that the capacities as given above were substantially correct.

1259890

Section IIIA
Table II

Empirical Formulas from Elemental Analyses on Salcomine, Table I (Section IIIA)

No.	Sample	Oxygen	Nitrogen	Cobalt	Carbon-Hydrogen*
1	SL-174	2.0	1.94	1.0	15.7
2	Rumford CP		1.89	1.0	
3	L-1	2.8	1.81	1.0	15.0
4	L-2	2.4	1.84	1.0	15.4
Theoretical		2.0	2.00	1.0	16.0

*The values for carbon-hydrogen were calculated on the assumption that the ratio of carbon to hydrogen was exactly 1 to 1; actually, for pure Salcomine at least, the ratio was 16/14. In other words, it was assumed in compiling the C-H/Co ratios above that the (C-H) in each sample had an average "atomic weight" of 13. Sample calculation (from Table I): "gram-atoms" of C-H per 100 grams for SL-174 = 60.3 ÷ 13 = 4.64. Gram-atoms of cobalt per 100 grams sample = 17.4 ÷ 59 = 0.295. "Atoms" of C-H per atom of cobalt = 4.64 ÷ 0.295 = 15.7.

1259891

Section IIIA
Table III

Capacity Determinations on Salcomine (All Weights in Grams)

(1) No.	(2) Sample	(3) mml	(4) Gms.	(5) Loss at 110°C. 90 Min.	(6) % Loss	(7) Net Wt. (4-5)	(8) Wt. Gain (Capacity)	(9) Max. Gain*	(10) % of Max. (8) ÷ (9) x 100
1	SL-174	10	3.390	0.159	4.7	3.231	0.132	0.160	83
2	Rumford CP	10	3.360	0.155	4.6	3.205	0.128	0.160	81
3	L-1	10	3.350	0.121	3.6	3.229	0.015	0.160	9
4	L-2	10	3.400	0.167	4.9	3.233	0.019	0.160	12
Theoretical		10	3.410	0.160	4.7	3.250	0.160	0.160	100

*Assuming one atom of oxygen could be absorbed per atom of cobalt, or 160 mg. oxygen per 10 mml. sample.

Volatile at 110°C. and Capacity Determinations on Salcomine
(Analytical Data Expressed as Per Cent of Original Sample)

				Standard Procedure (Deox'd. Under N_2)						Deox'd. Under Air	
						Off-Gas (Volatile at 110°C.) Analysis					
No.	Sample	mml	Gms.	Volatile at 110°C.	Capacity	O_2*	CO_2*	H_2O**	Total	Volatile at 110°C.	Capacity
1A	SL-174	10	3.390	4.7	3.9 ± 0.0	3.6 ± 0.1		0.69 ± 0.04	4.3	4.5 ± 0.0	3.9 ± 0.1
2A	Rumford CP	10	3.360	4.6	3.8 ± 0.0	3.7 ± 0.0		0.59 ± 0.04	4.3	4.5 ± 0.0	3.9 ± 0.0
3A	L-1	10	3.350	3.6	0.44 ± 0.01	0.53 ± 0.00	0.13 ± 0.05	2.1 ± 0.0	2.8	3.5 ± 0.1	0.42 ± 0.02
4A	L-2	10	3.400	4.9	0.57 ± 0.03	1.3 ± 0.2	0.00	2.2 ± 0.1	3.5	4.6 ± 0.2	0.58 ± 0.03

* Determined by Orsat analysis of collected gases given off at 110°C. from closed system.

** Determined by absorbing in Drierite gases given off at 110°C. (in closed system, swept out with dry nitrogen.)

1259892

Results of the above analyses are summarized in Tables I, II and III. It was apparent from the data of Tables I and II that unused Salcomine had a N/Co ratio smaller than the theoretical 2.0. On cycling, the N/Co became smaller still, the C-H/Co ratio dropped below the theoretical 16.0 and the O/Co ratio increased above the theoretical 2.0. The drop in C-H/Co ratio was in line with experimental observations of carbon oxides in off-gases during cycling.

In Table III are presented some further data on the nature of the materials volatile at 110°C. Evidently the off-gas in each case was predominantly oxygen and water. The oxygen in the off-gas corresponded well to the observed capacity in all cases except that of L-2 which presumably absorbed oxygen at a relatively slow rate.

B. Distillation Analyses

As a result of many trials, including detailed control experiments, a standard scheme of distillation analysis was evolved and is presented below. (This scheme could be modified by omitting some steps depending on the emphasis to be placed on the results, particularly as regarded the aqueous acid-insoluble material.)

3.0 grams of sample was weighed into a (TS 29/42 neck) 500 ml. round bottom distillation flask, then deoxidized by heating for 1-1/2 hours in a 110°C. oven under a stream of nitrogen.

On removal from the oven the flask was tightly stoppered until connected to a modified Claison head equipped with a sintered glass sparger extending to the bottom of the flask and a separatory funnel (Fig. 1). A slow stream of nitrogen was passed through the sparger, then the flask stopper was quickly removed and the flask connected to the distillation apparatus. A slight positive pressure of nitrogen was maintained throughout the analyses.

(1) Aldehyde

100 ml. of 1N sulfuric acid was passed in through the separatory funnel and 180 ml. of distillate removed at constant pot volume (100 ml.) by the continuous addition of water. The distillate was passed into 70 ml. of 0.5N hydroxylamine hydrochloride solution in 80% methanol which previously had been adjusted to pH 2.5. The hydroxylamine hydrochloride was contained in a 250 ml. graduated receiver carrying a side arm. The tip of the condenser was elongated to reach nearly to the bottom of the receiver so

that any aldehyde vapor was removed by scrubbing through the carbonyl reagent. Carbon dioxide was then removed by the barium hydroxide scrubber attached to the receiver's side arm.

The aldehyde was determined according to the stoichiometric reaction, $R \cdot CHO + H_2NOH \cdot H^+ = RCH{=}NOH + H_2O + H^+$, by potentiometric titration with 0.5N sodium hydroxide to the pH of a control consisting of 70 ml. of 2.5 pH, 0.5N hydroxylamine hydrochloride solution plus 180 ml. of water.

(2) Steam Volatile Acid for Aldehyde Correction and Total Volatile Acid

The pot was cooled and a fresh receiver placed on the apparatus. An additional 180 ml. of distillate was removed at constant pot volume (100 ml.); this distillate was titrated with 0.1N sodium hydroxide to phenolphthalein endpoint. Then an empirical correction was made on the aldehyde analysis by subtracting 50% of the total acid in the 180 ml. of distillate from the aldehyde value; this correction was established by potentiometric titrations to pH 2.5 on controls consisting of hydroxylamine hydrochloride, water and salicylic acid. (Salicylic acid was identified by the optical examination of the dried ether extract of this cut.) Although the 50% value used was established empirically (it represents the difference between titrating to pH 2.5 and to the phenolphthalein endpoint), the volatile acid was determined as above on each sample.

The acid titer to phenolphthalein was multiplied by a factor of two (on the assumption that an equal amount of acid was removed in the aldehyde distillation) to give the "Total Volatile Acids".

The pot liquid was then concentrated to 50 ml. volume. The distillate was titrated with 0.1N sodium hydroxide and the acid titer included in the calculation of steam volatile acid.

(3) Aqueous Acid Insoluble

The pot residue was filtered through a tared, sintered, glass-bottomed crucible and the acid-insoluble material weighed after drying at 110°C.

(4) Residual Acid

The clear filtrate was extracted with 3 x 50 ml. of ether; the ether extract was set aside to be combined

with a similar extract later in the analysis; the water layer was returned to the still.

(5) Ammonia

To the water layer in the pot there was added 15 ml. of concentrated sodium hydroxide (1:1, CO_2-free) and 200 ml. of methanol. 200 ml. of distillate was removed, the distillate being absorbed in 50 ml. of 0.1N hydrochloric acid which was kept at 0°C. (The low temperature prevented the formation of methyl chloride in the distillate while the methanol in the still kept the vapor pressure of ethylenediamine so low that no appreciable quantity distilled. Ammonia was determined by back titration of the distillate with 0.1N sodium hydroxide to methyl red indicator. (Ammonia was identified in these cuts by preparation and determination of the optical constants of the picrates.) A well dispersed stream of nitrogen was necessary in this operation to prevent bumping.

(6) Ethylenediamine

After the removal of ammonia the separatory funnel was filled with xylene, then ethylenediamine and water removed by continuous distillation with xylene. Xylene was removed until the distillate showed no alkaline test with bromphenol blue indicator. The distillate was passed into methanol to homogenize the water-xylene layers, then ethylenediamine was determined by direct titration with 0.5N hydrochloric acid to bromphenol blue indicator. (Ethylenediamine was identified in these cuts by the optical constants of the picrates.)

(7) Carbon Dioxide

The pot was reacidified by the addition of 100 ml. of 3N sulfuric acid, then the off-gas from the distillate was passed through the barium hydroxide scrubber originally used. (Most of the CO_2 was recovered at this point.) The distillate was again titrated with 0.1N sodium hydroxide to phenolphthalein and the titer included in the calculation of total volatile acid. The contents of the barium hydroxide scrubber were washed into a 600 ml. beaker using water, the excess barium hydroxide titrated to phenolphthalein, 20 grams of sodium chloride plus a recorded excess of hydrochloric acid then added, and the barium carbonate determined by back titration with 0.2N barium hydroxide to methyl orange indicator.

(8) Residual Acid

The pot liquid from the carbon dioxide distillation was extracted with 3 x 50 ml. of ether. The ether extract was combined with that from step (4) and weighed after evaporation to dryness.

(9) Residual Nitrogen

The water layer from the ether extraction was transferred to a Kjeldahl flask and treated with 20 ml. of concentrated sulfuric acid, 5.0 grams of potassium sulfate, and a pinch of copper selenate catalyst. The sample was then digested for 3 hours over an open flame. Nitrogen was determined as ammonia by Kjeldahl distillation.

Notes on Standard Distillation Procedure

(1) Aldehyde

Control experiments using the procedure on 17-20 mmls. of pure salicylaldehyde gave 99.8-100.1% recovery. With 7-18 mmls. of salicylald-ethylenediimine the recovery was 100.0-100.2%. Salicylaldehyde in the presence of cobalt or cobalt plus ethylenediamine gave 100.1-100.3% recovery.

In the presence of 5.5 mml. of salicylic acid, 114 mml. of salicylaldehyde gave 101.7% recovery (1.7% ≡ 0.24 mml. acid). Controls on salicylic acid alone (see note 2) gave 0.24-0.42 mml. acid.

(2) Steam Volatile Acid

The standard distillation procedure was carried out in two experiments with respectively (a) salicylaldehyde plus salicylic acid and (b) salicylic acid alone. The acid recoveries according to steps* were as follows (data in mmls.):

*Steps in standard distillation procedure indicated in table by numbers in parenthesis over columns.

1259896

	Acid Taken	(2) St. Vol.	(2) CO_2	(4) Ether Ext.	(7) CO_2	(7) St. Vol.	(8) Ether Ext.	Total	Total % Recovery
(a)	5.53	0.24	0.10	3.42	0.89	0.84		5.49	99.3
(b)	5.44	0.42	0.14	2.67	1.01	0.95		5.19	95.4
(c)		0.99			1.21 (total)	0.25		2.45	
(d)		1.02			1.33 (total)	0.56		2.91	

(c) and (d) represent average results obtained on 9.0 mml. L-1 and 8.9 mml. L-2 respectively. An experiment similar to (a) and (b) was performed using 10.8 mml. of salicylamide. Only about 12% of the ammonia and 0% of the CO_2 were recovered; the presence of cobalt had no effect.

(5) Ammonia

The standard procedure of step (5) was performed on a series of samples as follows:

Sample	mmls. Taken	mmls. Volatile Base Recovered	% Recovery
NH_3	14.37	14.39	100.1
NH_4OAc	17.06*	16.53	97.0
NH_3 (+47 mml. ØOH·CHO)	8.07	8.04	99.6
EDA	9.89	0.0	0.0

*This sample contained moisture for which no correction was applied.

(6) Ethylenediamine

The standard procedure of step (6) was performed on a mixture of salicylic acid, cobaltous chloride and 11.63 mml. of ethylenediamine; recovery was 11.28 mml., 97%.

The upper part of Table I presents a summary of results obtained by the standard distillation procedure omitting steps (3) and (4); the lower part of Table I presents results on SL-174 and L-1 by the unabridged procedure. Tables I, II, III and IV show respectively the nitrogen balance, weight balance, carbon balance and oxygen balance based on the analytical data of Table I and Table I, Section IIIA. The only assumptions made in drawing up these tables were that (1) the volatile acid and CO_2 represented salicylic acid and (2) the residual nitrogen was contained in a compound having the empirical formula ($\phi\cdot O-\cdot CH{=}N-C_2H_4-N{=}$). The assumption of salicylic acid and the ethylenediamine compound respectively could not be greatly in error stoichiometrically. (The molecular weights of the residual nitrogen compounds must have been greater than that of ethylenediamine and less than that of Salcomine.)

It was apparent from Table II* that the distillation procedure gave a quantitative picture of the composition of both undegraded Salcomine (samples SL-174 and Rumford CP) and degraded Salcomine (samples L-1 and L-2). Table I showed that the nitrogen in all the samples was accounted for quantitatively.

The tables indicated that for samples L-1 and L-2 an appreciable amount of carbon and oxygen as well as

- - - - -

*The high totals for the lower half of the table were due principally to counting a small portion of organic acid twice, i.e., as calculated from the CO_2 analysis and the ether extract. Correction for the overlap would reduce the total for sample L-1 from 102% to about 99%.

1259898

some nitrogen was contained in the non-volatile acid-insoluble residue and non-volatile ether extracts. Table V as well as Table II indicated that the non-volatile acid-insoluble and ether extracts must be predominantly carbon (hydrogen) and oxygen. The acid insoluble was analyzed for several different types of degraded Salcomine and found to average about 55% C and 4% H (Theor. for salicylic acid, $C_7H_6O_3$, 61% C, 4% H) with 2-3% N and, in the one case analyzed, 3-4% Co. The amount and exact composition of the non-volatile acid insoluble residue and ether extracts depended somewhat on the analytical procedure but these materials were obviously derived from salicylaldehyde and were shown to contain very appreciable amounts of salicylic acid.

Table V showed that sample SL-174 could contain no appreciable amount of cobaltic oxide, but the cobalt in sample L-1 could be completely oxidized (with one oxygen per two cobalt atoms) and sample L-2 could have a maximum of 20% oxide. The ratio of left-over C/O (from Table V) for samples L-1 and L-2 was close to 2/1 as compared to 2.3/1 for salicylic acid or ammonium salicylate. On this basis, sample L-1 could contain about 40% of cobaltic oxide (coordinated).

Table VI showed the maximum Salcomine content possible in the samples and the fragments remaining, calculated from the data of Table I.

1259899

Section IIIB
Table I

Standard Distillation Analysis of Salcomine
(All Analytical Values in m.e. Unless Otherwise Noted)

No.	mml	Sample (g.)	Aldehyde	Total Volatile Acid	Total CO_2	Acid Insol. (g.)	Ether Ext. (g.)	Σ	Ammonia	Ethylene-diamine	Residual N	Σ	N/Co*
1	10	3.39 SL-174	18.9 18.9	0.3 0.2	0.2 0.4			19.4 19.5	0.7 0.8	17.9	0.4 0.4	19.1	19.4
2	10	3.36 Rumford CP	18.7 18.7	0.2 0.2	0.3 0.3			19.2 19.2	0.4 0.5	18.4 18.1	0.3 0.3	19.1 18.9	18.9
3	10	3.35 L-1	13.9 13.9	1.2 1.5	1.4 1.3			16.5 16.7	4.5 4.4	11.8 11.7	1.8 1.7	18.1 17.8	18.1
4	10	3.40 L-2	15.2 15.2	1.8	1.7			18.7	3.5 3.6	12.9 12.7	1.8	18.2	18.4
1A	10	3.39 SL-174	18.7 18.5	0.1 0.2	0.2 0.1	0.02 0.02	0.07 0.12	19.0 18.8	0.7 0.6	17.6 17.9	0.9 0.9	19.2 19.4	19.4
3A	10	3.35 L-1	13.2 13.5	1.7 1.6	1.3 1.3	0.31 0.31	0.15 0.16	16.2 16.4	4.3 4.6	10.5 10.7	1.6 1.2	16.4 16.5	18.1
S	10	Synthetic**	17.4	0.2	0.0	0.10	0.00	17.6	0.05	17.4	1.6	19.1	-

* Nitrogen/cobalt ratio (for 10 mml cobalt) taken from Table II, Section IIIA.

** Sample made up from 20.3 mml ø OH.CHO, 100 mml $(H_2N\text{-}CH_2\text{-})_2$ and 10.0 mml $CoCl_2.6\ H_2O$, mixed in anhydrous methanol solution in air and then analyzed according to the standard procedure under nitrogen. (If sample had been made up under nitrogen, complete recovery of aldehyde would have been obtained: See note on aldehyde procedure.)

1259900

Section IIIB
Table II

Calculation of Weights from Data of Table I
(All Analytical Results in Gms.)

No.	ml	g. Sample	Net Wt.	Aldehyde	Acid	Ammonia	Diamine	Residual N	Acid Insol.	Ether Ext.	Co	Σ	%
1	10	3.39 SL-174	3.24	2.00 2.00	0.06 0.07	0.01 0.01	0.50	0.03 0.03			0.59 0.59	3.20	99
2	10	3.36 Rumford CP	3.21	1.98 1.98	0.06 0.06	0.01 0.01	0.52 0.51	0.02 0.02			0.59 0.59	3.18 3.17	99 99
3	10	3.35 L-1	3.23	1.47 1.47	0.31 0.34	0.07 0.07	0.33 0.33	0.14 0.14			0.59 0.59	2.91 2.94	90 91
4	10	3.40 L-2	3.24	1.61 1.61	0.42	0.06 0.06	0.36 0.36	0.14			0.59 0.59	3.18	98
1A	10	3.39 SL-174	3.24	1.98 1.96	0.04 0.04	0.01 0.01	0.49 0.50	0.07 0.07	0.02 0.02	0.07 0.12	0.59 0.59	3.27 3.31	101 102
3A	10	3.35 L-1	3.23	1.40 1.43	0.36 0.35	0.07 0.07	0.29 0.30	0.13 0.10	0.31 0.31	0.15 0.16	0.59 0.59	3.30 3.31	102 102
S	10	Synthetic	3.30	1.84	0.02	0.00	0.49	0.13	0.10	0.00	0.59	3.17	96

Net wt. of sample = gross wt. - volatile at 110°C. (Table I, Section IIIA).
Aldehyde calculated for the formula (ø.OH.CH=), m.w. 106.
Acid calculated from total volatile acid + CO_2 for the formula (øOH.C=O-), m.w. 121.
Ammonia calculated for the formula (H_2N-), m.w. 16.
Ethylenediamine calculated for the formula (=N-C_2H_4-N=), m.w. 56.
Residual nitrogen calculated for the formula (øO-.CH=N-C_2H_4-N=), m.w. 161.
Cobalt taken from Table I, Section IIIA.
% = Σ ÷ net wt. of sample x 100.

1259901

Section IIIB
Table III

Calculation of Carbon Contents from Data of Table I (All analytical results in mml.)

No.	mml.	Sample	Alde-hyde	Total Volatile Acid	Total CO_2	Sum,	Ethylene-diamine	Resid-ual N	Sum_2	Sum, + Sum_2	CH/Co*
1	10	SL-174	132.3 132.3	2.1 1.4	1.4 2.8	135.8 136.5	17.9	1.8 1.8	19.7	156.2	157
2	10	Rumford CP	130.8 130.8	1.4 1.4	2.1 2.1	134.3 134.3	18.4 18.1	1.4 1.4	19.8 19.5	154.1 153.8	
3	10	L-1	97.3 97.3	8.4 10.5	9.8 9.1	115.5 116.9	11.8 11.7	8.1 7.7	19.9 19.4	135.4 136.3	150
4	10	L-2	106.4 106.4	12.6	11.9	130.9	12.9 12.7	8.1	21.0	151.9	154

*Carbon hydrogen/cobalt ratio (for 10 mml. cobalt) taken from Table II, Section IIIA.

1259902

Section IIIB
Table IV

Calculation of Oxygen Contents from Data of Table I (All analytical results in mml.)

No.	mml.	Sample	Aldehyde	Total Volatile Acid	Total CO_2	Residual N	Sum	O/Co*
1	10	SL-174	18.9 18.9	0.6 0.4	0.4 0.8	0.2 0.2	20.1 20.3	20
2	10	Rumford CP	18.7 18.7	0.4 0.4	0.6 0.6	0.2 0.2	19.9 19.9	
3	10	L-1	13.9 13.9	2.4 3.0	2.8 2.6	0.9 0.9	20.0 20.4	28
4	10	L-2	15.2 15.2	3.6	3.4	0.9	23.1	24

Aldehyde calculated for the formula (ØOH·CH=)
Acid and CO_2 calculated for the formula (ØOH·CO-)
Residual N calculated for the formula (ØO-·CH=N-C_2H_4-N=)

*Oxygen/cobalt ratio (for 10 mml. cobalt) taken from Table II, Section IIIA

1259903

Section IIIB
Table V

Summary of Weight, Carbon and Oxygen Data from Tables I-IV

No.	mml.	Sample	(g) (Net wt. - calc. wt.) Table II	(mml.) (Total C - obs. C), Table III	(g)	(mml.) (Total O - obs. O), Table IV	(g)	Sum g.C + g.O
1	10	SL-174	0.04	1	0.01	0	0.00	0.01
2	10	Rumford CP	0.03 0.04					
3	10	L-1	0.32 0.29	15 14	0.18 0.17	8 8	0.13 0.13	0.31 0.30
4	10	L-2	0.06	2	0.02	1	0.02	0.04

1259904

Section IIIB
Table VI

Maximum Salcomine Content (from Ethylenediamine and Residual Nitrogen) and Fragments from Table I. (All analytical values in mml.)

No.	mml.	Sample	Max. Salcomine	Residuals: Aldehyde*	Total Vol. Acids	Total CO_2	Sum	Ammonia	Cobalt	Aldehyde** by Straight Aq. Dist.
1	10	SL-174	9.2	0.8	0.2	0.4	1.4	0.8	0.8	0.2
2	10	Rumford CP	9.4	0.1	0.2	0.3	0.6	0.4	0.6	0.2
			9.2	0.4	0.2	0.3	0.9	0.5	0.8	
3	10	L-1	6.8	1.2	1.2	1.4	3.8	4.5	3.2	0.8***
			6.7	1.3	1.5	1.3	4.1	4.4	3.3	
4	10	L-2	7.4	1.4	1.8	1.7	4.9	3.5	2.6	0.2

* Calculated as follows: Aldehyde as Salcomine in mmls. = m.e. ethylenediamine + $\frac{\text{ave.}}{2}$ residual N (since one aldehyde was assumed already associated with residual N).

** This value was determined by the same procedure as used for total aldehyde except that water was substituted for 1N H_2SO_4

*** This aldehyde was accompanied in the distillate by 1.1 mml. N (as determined by Kjeldahl analysis on an aliquot).

Section IIIB
Figure I

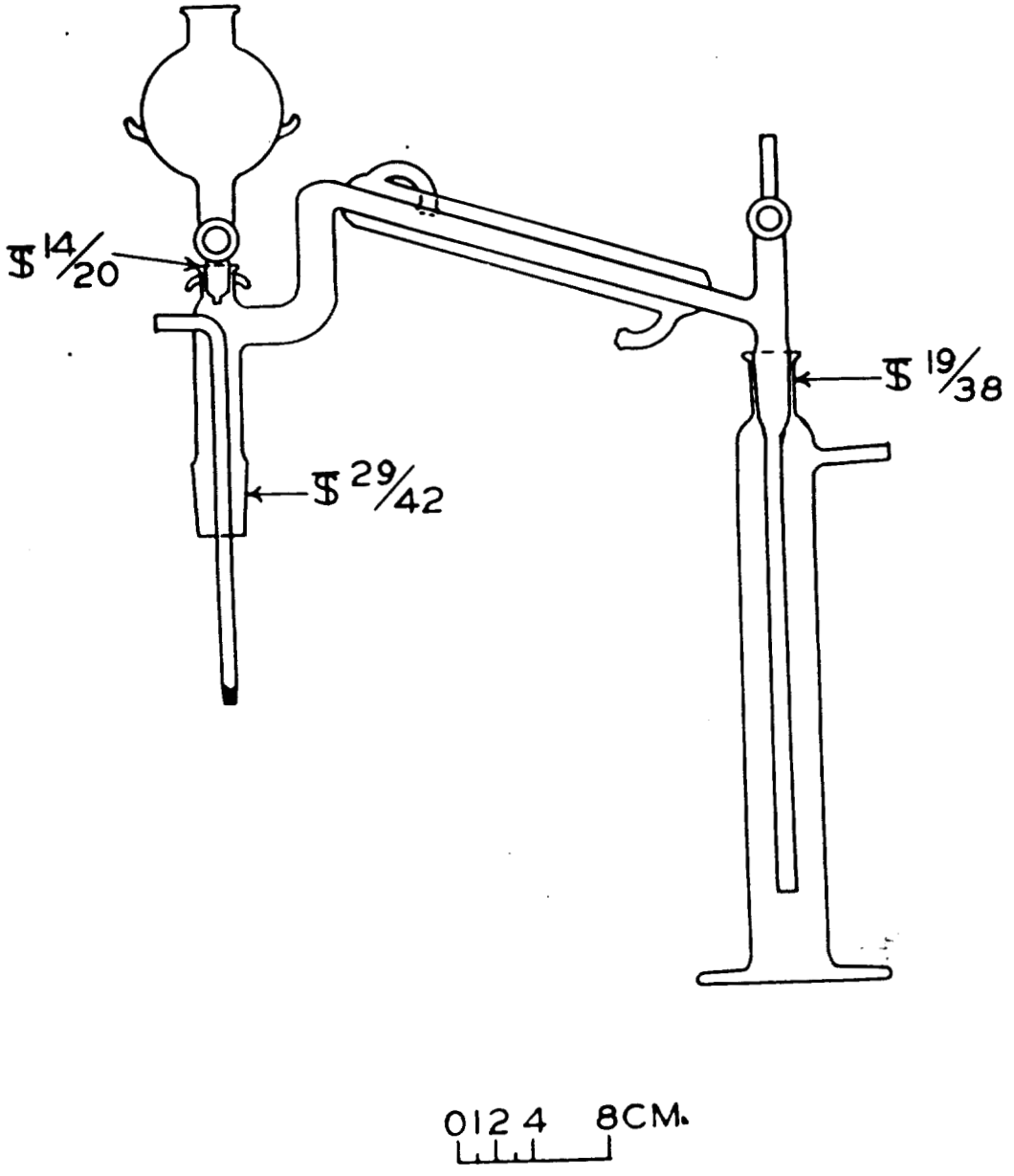

1259906

C. Reactions with Karl Fischer Reagent

(1) The procedure used for the titration of deoxidized Salcomine with Karl Fischer reagent was as follows:

Reagents. Karl Fischer reagent[1], dry methanol, water in methanol containing approximately 2.5 mgs. H_2O/ml.

Apparatus. Suction-filling reservoir burets[1], dead-stop apparatus consisting of 1.5 V dry cell, platinum electrodes, galvanometer or milliammeter, potentiometer type rheostat[2]. The resistor was adjusted to give an applied voltage of about 60 mv. with a current of about 14 MA in the presence of excess Fischer reagent.

Procedure. Two grams of sample was weighed into a glass-stoppered titration flask and heated 1.5 hours at 110°C. under an atmosphere of nitrogen. At the end of this time the flask was removed and allowed to cool to room temperature in a desiccator under nitrogen. While still under nitrogen, 100 ml. of dry methanol and excess Karl Fischer reagent were added. The flask was then connected to the dead-stop apparatus. The mixture was titrated with the water in methanol to the endpoint, a permanent deflection of the galvanometer to less than 10 MA.

Duplicate blanks containing 100 ml. of methanol were titrated in the same manner. The Karl Fischer reagent was standardized by adding excess Fischer reagent to 10 ml. of water standard[1] and back titrating with water in methanol. (The relative strengths of the Fischer reagent and water in methanol were determined by titration of 50 ml. of the former with the water in methanol.)

Calculation

$$\frac{\text{Net titer} \times (\text{mg. } H_2O/\text{ml. of K. F. reagent})}{\text{wt. sample} \times 1000} \times 100 =$$

reaction expressed as % H_2O

- - - - - - - -

[1]Smith, Bryant and Mitchell, J. Amer. Chem. Soc., 61, 2407 (1939).

[2]Wernimont and Hopkinson, J. Ind. Eng. Chem. An. Ed., 15, 272 (1943)

1259907

(2) Free water was determined by using the same procedure on the unheated oxidized material. The difference between the two titers gave the free or adsorbed water. Typical data are given in Table I along with comparable data by other procedures.

In order to determine the nature of reaction of Karl Fischer reagent with deoxidized Salcomine the orientation experiments detailed in Table III were performed. There are four possible reactions of interest in this problem:

$$H_2O + I_2 + SO_2 + MeOH \xrightarrow{\text{pyridine}} 2\ HI + CH_3OSO_3H \qquad (I)$$

$$2\ (\text{-O-Co-O-}) + I_2 = 2\ (\text{-O-Co-O-})^+ + 2\ I^- \qquad (II)$$

$$(\text{-O-Co-O-})_2O + I_2 + SO_2 + MeOH = 2\ (\text{-O-Co-O-})^+ + 2\ I^- + CH_3OSO_3H \qquad (III)$$

$$(\text{-O-Co-O-})OH + I_2 + SO_2 + MeOH = (\text{-O-Co-O-})^+ + H^+ + 2\ I^- + CH_3OSO_3H \qquad (IV)$$

Reaction I was the reaction of water with Karl Fischer reagent. Reaction II was the reaction of coordinated cobaltous cobalt with iodine to form coordinated cobaltic cobalt; with uncoordinated cobalt, this reaction tended to be reversed. Reactions III and IV represented the behavior of coordinated cobaltic oxide and hydroxide respectively with Karl Fischer reagent. Although the exact reactions for II, III and IV had not been studied in this laboratory previously, analogous reactions had been carefully worked out[3]. According to reaction II, deoxidized Salcomine would appear to contain 0.5 mole H_2O per mole of "monomer". According to reaction III oxy-Salcomine would also appear to contain 0.5 mole H_2O per mole of "monomer", but by reaction IV hydroxy-Salcomine would appear to contain 1.0 mole H_2O per mole of "monomer".

The only other reaction which might be involved in the titration of Salcomine with Karl Fischer reagent was the evolution of H_2O by side reactions; the possibility was kept in mind throughout this study.

Experiments (b-e) of Table III established reactions II and III for the behavior of undegraded Salcomine; both reactions were dependent on coordinated cobalt: cobaltic

- - - - - -

[3] Smith, Bryant and Mitchell, J. Amer. Chem. Soc., 63, 2927 (1941).

compounds would not be stable unless the cobalt were coordinated.* The necessity for coordination of the cobalt before reaction takes place with Karl Fischer reagent was further illustrated by the data of Table IV where coordination was observed only when cobalt and ethylenediamine were present together.

Table V showed the relative behavior of some conceivable components of degraded Salcomine. The general indication was that Karl Fischer titers would be obtained only in the presence of cobalt coordinated with nitrogen compounds, especially ethylenediamine. Table II shows the close correlation found between the apparent water by Karl Fischer titration and the "total ethylenediamine" content. The significance of this correlation is discussed in Section IV, pp. 27-28.

*The behavior shown in Table III (g) was interesting in that 9.4 mml. apparent H_2O per 10 mml. sample was found. This was the ratio called for by equation IV and suggested the presence of hydroxy-Salcomine.

1259909

Section IIIC
Table I

Free Water In Salcomine (All Analytical Data in mml Unless Otherwise Noted)

No.	mml	Sample	Standard Procedure (Oxidized K.F. Titer) Total	Standard Procedure (Deoxidized K.F. Titer) Apparent	Standard Procedure (Net Titer) Free H_2O	Free Water* Xylene Dist.	Free Water By Absorption of Off-Gas At 110°C. in Drierite Table III, Section IIIA	% Free Water By Standard Procedure	% Free Water* Xylene Dist.	% Free Water in Off-Gas From Table III, Sect. IIIA
1	10	SL-174	5.5 ± 0.2	4.9 ± 0.1	0.6	1.1	1.3	0.3	0.6	[illegible]
2	10	Rumford CP	4.8 ± 0.1	4.9 ± 0.1	0.0	0.9	1.1	0.0	0.5	[illegible]
3	10	L-1	7.3 ± 0.1	3.5 ± 0.2	3.8	4.7	3.9	2.0	2.5	[illegible]
4	10	L-2	8.4 ± 0.1	3.6 ± 0.1	4.8	4.3	4.2	2.5	2.3	[illegible]

Apparent Water in Salcomine by K.F. Titrations
(All Analytical Data in mml Unless Otherwise Noted)

No.	mml	Sample	Standard Procedure (Deox'd. Under N_2) (Titrated Under N_2)	(Deox'd. Under Air) (Titrated Under Air)	Residue from Xylene* Dist. (See Above)
1A	10	SL-174	4.9	3.8 ± 0.2	4.6
2A	10	Rumford CP	4.9	3.5 ± 0.2	3.1
3A	10	L-1	3.5	2.1 ± 0.1	3.2
4A	10	L-2	3.6	2.4 ± 0.2	3.5

* Determined by distilling sample from dry xylene, titrating distillate and residue, respectively, with Karl Fischer reagent.

1259910

Section IIIC
Table II

Ethylenediamine and Karl Fischer Titer for Salcomine

No.	mml.	Sample	me., from Table I, Sect. IIIB: Ethylene-diamine	Residual N	Sum	Sum/4	mm. Apparent H_2O from Table I Sect.IIIC
1	10	SL-174	17.9	0.4	18.3	4.6	4.9
2	10	Rumford CP	18.3	0.3	18.6	4.7	4.9
3	10	L-1	11.8	1.8	13.6	3.4	3.5
4	10	L-2	12.9	1.8	14.7	3.7	3.6

1259911

Section III C

Table III

Experiments with Karl Fischer Reagent

No.	mml.	Sample	Experimental Conditions*	Apparent mml. H_2O**	Indication
(a)	10	H_2O	In dry methanol	10.00 ± 0.05	The titration of water with K. F. Reagt. was readily reproducible to 1 mg. H_2O or less.
(b)	10	SL 174	Heated at 10^{-5} mm. Hg for 2 hrs. at 100-200° C.	4.8 ± 0.10	Pretty well eliminated presence of hydrate. Suggested reaction (II). Sample was still active (capacity 4.3%) after heating.
(c)	10	SL 174	Titrated to pH 4 with 0.5 N HCl in dry MeOH and evaporated to dryness on steam bath	0.3	The reaction of oxidized Salcomine was due to presence of oxide or hydroxide. On removal of oxide and hydroxide, oxidized Salcomine showed (almost) no reaction with K.F. reagt.
(d)	10	SL 174	Titrated to pH 4 with 0.5 N HCl in dry MeOH	5.0	(Compare with (c)-) Reaction due to water formed on addition of H^+
(e)	10	SL 174	Deoxid. (90 min. at 110° C. under N_2) and hydrolyzed with alcoholic H_2SO_4	0.5 ± 0.1	When deoxidized Salcomine was hydrolyzed, coordination should have been destroyed and this was true according to this experiment. $H_2NOH \cdot HCl$ was added to prevent aldehyde interference; $H_2NOH \cdot HCl$ plus 10 mml. deoxidized Salcomine without hydrolysis gave 4.6 ± 0.05 mml. as expected.
(f)	10	Synthetic	Prep. by Diehl's method: diimine + hot NaOH and NaOAc; added $Co(NO_3)_2 \cdot 6\ H_2O$***	3.9 (assumed M.W. 340)	This preparation behaved as impure Salcomine; no attempt at purification was made.
(g)	10	Synthetic	Prep. by alcohol method: $Co(OAc)_2 \cdot 4\ H_2O$ in 60% EtOH + $C_2H_4(NH_2)_2$ in EtOH followed by $\Phi OH \cdot CHO$ in EtOH***	9.4 (assumed M.W. 340)	This preparation behaved like hydroxy-Salcomine
(h)	10	Synthetic	Prep. by pyridine method: $CoCl_2 \cdot 6\ H_2O$ in hot H_2O + $C_2H_4(NH_2)_2$ + pyridine and $\Phi OH \cdot CHO$	5.7 (assumed M.W. 404)	This preparation behaved like Salcomine containing 14% hydroxy-Salcomine
(j)	10	SL 174	In dry methanol, titrated with uncharged K.F. reagt. (i.e. less the SO_2)	<0.5	Neither oxidized nor deoxidized Salcomine reacted rapidly with the uncharged reagent (reaction observed was probably aromatic addition). This may have been due to steric hindrance or blocking as by pyridine.

*All heatings, handlings and titrations in an atmosphere of dry nitrogen unless otherwise stated.

**Results corrected for added water and water from any known side reaction.

***Dried in vacuum oven at 50° C. and stored several days in vacuum desiccator over P_2O_5.

Note on (e): As expected, the corresponding experiment using oxidized Salcomine (SL 174) gave 4.4 ± 0.1 mml. for the hydrolysis with $H_2NOH \cdot H^+$ added afterwards; however, when $H_2NOH \cdot H^+$ was added directly to oxidized Salcomine (SL 174) without hydrolysis, subsequent reaction with K.F. reagent gave 9.8 ± 0.0 mml. No reaction has been written for this last case.

1259912

Table IIIC
Table IV

Effect of Karl Fischer Reagent on Components of Salcomine

Materials (a) $C_2H_4(NH_2)_2 \cdot 2\ HCl$
(b) $CoCl_2$ (oven dried - 0.3% H_2O)
(c) Diimine
(d) $C_6H_4(OH)CHO$

Procedure: Where (a) was used the exact equivalents of N/2 $NaOCH_3$ were added to remove the HCl. After following conditions as noted below, excess K.F. reagent was added. Apparent water was determined by the dead-stop technique. Results were corrected for known water originally present plus known water of reaction.

No.	Components	Condition	mml. App. H_2O/10 mml.
1	a + b	air, 3.75 hrs. R.T.	4.3
2	2.5a + b	"	7.0
3	5.7a + b	"	10.5
4	a + b	N_2, 1.5 hrs. R.T.	1.0
5	3a + b	"	3.1
6	5a + b	"	2.6
7	5a + b	N_2, 0.5 hr. 60°	3.8 ± 0.6
8	b + c	Air, 18 hrs. R.T.	4.6
9	b + c	N_2, 1.5 hrs. R.T.	4.0
10	b + c	N_2, 0.8 hr. 60°	3.9
11	a + b + 2c	Air, 2 hrs. R.T.	0.9
12	a + b + 2d	N_2, 1.5 hrs. R.T.	Only 95% of H_2O from imine reaction
13	a + b + 2d	N_2, 30 min. 60° before addition of d, then 1 hr. R.T.	Only 80% of H_2O from imine reaction
14	2d + a + b	N_2, 0.5 hr. 60°	2.3
15	2d + a + b	N_2, 1.25 hrs. R.T.	2.0

Notes: (a), (b), (c), (d), (a + d) and (b + d) show no tendency to oxidize in the presence of Karl Fischer reagent.

The reaction of cobalt (3 above) with excess ethylenediamine and air to give a compound with 10/10 ratio on reaction with Karl Fischer reagent has not been worked out, although the comparative behavior of 1 and 3 above recalled equations II, III and IV.

The comparative behavior of 1 and 4 above suggested that Co + $C_2H_4(NH_2)_2$ coordinated more rapidly in the presence than in the absence of oxygen; then heating in the absence of oxygen increased the rate of coordination, 1 + 10.

The behavior in 11 was probably related to that in 12; the natures of the reactions involved in 11-13 as compared to 14-15 have not been worked out.

Section IIIC
Table V

Action of Related Compounds on Karl Fischer Reagent

Materials:
(a) $CoCl_2$ (oven dried - 0.3% H_2O)
(b) $C_6H_4(OH)CHO$
(c) $C_6H_4(OH)CH{=}NOH$
(d) $C_6H_4(OH)CONH_2$
(e) $n\text{-}C_4H_9NH_2$
(f) $(C_6H_4(O\text{-})CONH\text{-}CH_2\text{-})_2Co$

Procedure: Mixtures in small quantity of dry methanol.

No.	Component	Condition	mml. App. H_2O/10 mml.
1	c + a	(pH 5-7) Air, 1.5 hr., R.T.	-1.0
2	1.6c + a	(pH 9-11) Air, 1.5 hr., R.T.	-0.1
3	d + a	Air, 1 hr. R.T.	0.5
4	d + a	Air, 0.5 hr. 60°	0.3
5	1.5d + a	N_2, 1 hr. R.T.	0.0
6	1.3d + a	N_2, 0.5 hr. 60°	1.3
7	a + e	Air, 18 hr. R.T.	0.4
8	a + 2e	"	0.4
9	a + e + b	"	0.4
10	a + 2e + 2b	"	-0.4
11	f	Air	5.7 ± 0.3

Notes: The reactions 1 and 2 above whereby cobalt, salicylaldoxime and air combined to give a compound which showed no net reaction with Karl Fischer reagent have not been worked out.

Compound (f) was the chelate of cobalt and salicylethylenediamide.

D. Desorption and Absorption of Oxygen by Salcomine

When oxidized, undegraded Salcomine was suspended in methanol and titrated with Karl Fischer reagent (Section IIIC) or with methanolic HCl (Section IIIE) it behaved as though it were in the form of the oxide. This implied that the peroxide tended to decompose to the oxide on suspension with a solvent, leaving one atom of oxygen (per 2 molecules of "monomeric" Salcomine) available for other reactions.

The data of Table I indicate that when suspended in methanol the released atom of oxygen tends to react with the Salcomine, although most of it can be recovered from strongly acidified solution. Contrary to the behavior in methanol, the oxide does not tend to form so strongly in carbon tetrachloride and particularly in water.

Since the oxide tends to form in methanol suspension, it might be expected that deoxidized Salcomine in neutral methanol would absorb just enough oxygen to form the oxide, but when partially hydrolyzed would not absorb any oxygen. This was verified by the data of Table II.

1259915

Section IIID
Table I

Desorption and Absorption of Oxygen in Salcomine

The total gas from oxidized SL-174, treated as indicated below, was collected in an Orsat and analyzed for CO_2(KOH) and O_2 (Pyro).

No.	Condition	Found ml. CO_2	Found ml. O_2	Calc. O_2 ml.
1	MeOH suspension	2.2	9.4	112
2	MeOH suspension, shaking	1.3	13.1	112
3	MeOH suspension, 1 HCl/ 1 SL-174	5	22.4	112
4	MeOH suspension, strongly acid, refluxed		44	112
5	CCl_4 suspension, refluxed		72	112
6	Water, reflux		52	66
7	K.F. Reagent		6	66

Section IIID
Table II

Oxygen passed over deoxidized SL-174. Absorption (ml.) measured by decrease in volume.

No.	Condition	Calc. O_2	O_2 Absorbed
1	Dry	72	69
2	MeOH suspension	47.5	23
3	MeOH suspension	67	30
4	MeOH suspension, 1 H_2SO_4/ 1 SL-174		0
5	H_2O suspension	66	21

Section IIID
Table III

Repeated evolution-absorption tests on oxid. SL-174 from boiling H_2O and under H_2O at R.T.
(Values in ml.)

No.	Calc. O_2	Found O_2	Absorb. O_2	Found O_2	Absorb.	Found
1	66	49	26	5		
2	66	43	20	0.5	8	0*

*Still coordinated. Dried sample ≡ 4.8 mml. app. H_2O/10 mml.

1259916

E. Potentiometric Titrations

When oxidized, undegraded Salcomine was suspended in pure dry methanol and titrated potentiometrically with 0.5N HCl in 97% MeOH (aqueous) to the inflection at pH 2.5, the ratio of mml. H^+ absorbed per mml. sample was almost exactly 1 (Fig. 1, plotted for 10 mml. samples), the sample going completely into solution. Deoxidized undegraded Salcomine, when similarly titrated under nitrogen, absorbed comparatively little H^+ to the inflection at pH 5.0 and dissolved only partially; but at lower pH's absorbed up to 4 mml. H^+ per mml. sample with complete solution. Deoxidized undegraded Salcomine when titrated under oxygen gave fluctuating values above pH 5, obviously due to oxygen absorption; but as pH 4 was approached the behavior steadied and at pH 2.5 the total H^+ reacted corresponded closely to the value observed for oxidized undegraded Salcomine.

Degraded samples tended to show smaller oxidized titers and larger deoxidized titers. The following procedures were finally adopted as standard.

1. Oxidized Salcomine

Three grams of sample was weighed into a standard TS 29/42 three-neck, 500 ml., round bottom flask (Fig. 2) followed by 200 ml. of anhydrous methanol. A vacuum-type (electric) stirrer was placed in the center grind, and the glass and calomel electrodes were placed in the other grinds through rubber stoppers. The tip of a 50 ml. burette was introduced through a small hole in one of the rubber stoppers. When the sample had stirred for 15 minutes at room temperature it was titrated with 0.5N HCl in 97% methanol. Since hydrolysis took place at low pH's, only small increments of acid were added; for best reproducibility the time interval between each addition of HCl was kept approximately constant.

2. Deoxidized Salcomine

The procedure was identical to that for oxidized Salcomine except for heating the sample at 110°C. for 1-1/2 hours in the titration flask under nitrogen prior to titration. The titration was carried out in an atmosphere of nitrogen, introduced through one of the side necks on the stirrer support and exiting through the other.

Results of titrations by these procedures are summarized in Table I.

1259917

The behavior of inert red isomer under oxygen and nitrogen respectively reproduced exactly the corresponding behavior of undegraded deoxidized Salcomine.

It seemed obvious that the reactions involved above included the following:

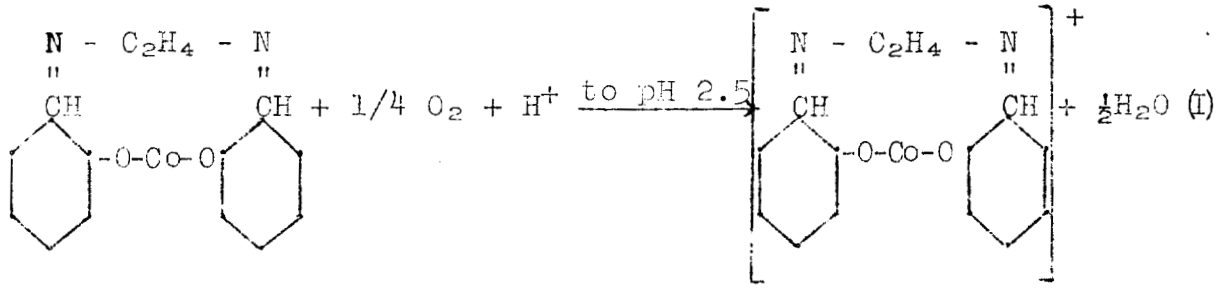

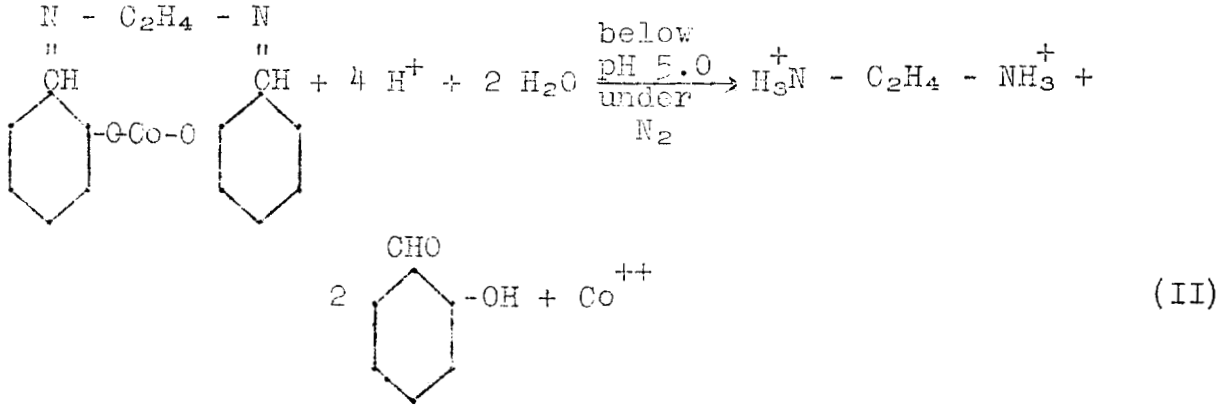

The oxidized product of reaction I was evidently more stable to hydrolysis than the original deoxidized Salcomine, both of which hydrolyzed very slowly at room temperature above pH 5 (Fig. 1). It also seemed apparent that when oxidized undegraded Salcomine was suspended in aqueous methanol it tended to form

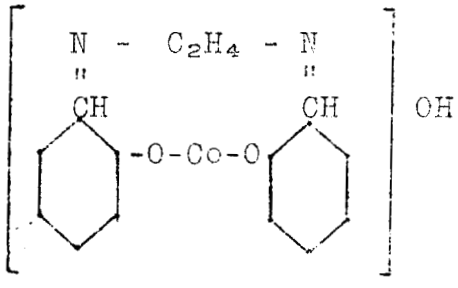

Below pH 5.0, hydrolysis according to reaction II took place more rapidly; substantially complete hydrolysis could be attained in one hour at 100°C. using 2N alcoholic HCl

even on oxidized undegraded material; at room temperature hydrolysis could proceed quantitatively but much more slowly. In an oxidized degraded sample the titer to pH 2.5 presumably was due to (1) oxidized undegraded Salcomine, (2) titrable isomers such as "inert red isomer", (3) "hydroxy Salcomine"*, (4) titrable degradation substances (see Tables II and III and Fig. III). In a deoxidized degraded sample under nitrogen, the corresponding titer presumably was due to (3) and (4) only. Then the difference between the two titers was a measure of the undegraded Salcomine and its titrable isomers (cobaltous cobalt) in a sample**.

The data of Tables II and III indicated that the components of Salcomine and its likely degradation products, in the presence of cobalt, all had titers in the pH range 3 to 9 (in air or nitrogen) corresponding to at least 1 mole OH^- (or H^+, depending on the direction of titration) per mole cobalt. From Table IV it was apparent that the oxidized potentiometric titers for samples L-1 and L-2 did not account for a considerable amount of cobalt, which (according to Tables II and III) could not be present in the form of separated or coordinated fragments.

- - - - - - -

* (III) above; oxidized (cobaltic), "degraded" in the sense that it apparently cannot be deoxidized without separation and reactivation.

** This statement involves the following unproved assumption for degraded material (probably nearly true):

(1) The titration under nitrogen below pH 5 of deoxidized samples (Fig. 1) was due to hydrolysis, but this hydrolysis did not take place on the oxidized sample titrated in air to pH 2.5. This in turn implies that the material could be changed, perhaps irreversibly, on heating to 110°C. under nitrogen.

It should be pointed out, perhaps, that the underlined statement above was obtained by simple arithmetic as follows:

Oxidized titer = (1) + (2) + (3) + (4) above
Deoxidized " = (3) + (4)

Oxidized titer - deoxidized titer = (1) + (2) = materials in cobaltous state when deoxidized. The results of this section (particularly Table IV) are discussed briefly in Section IV, pg. 28.

1259919

Section IIIE
Table I

Potentiometric Titration of Salcomine Suspended in 200 ml. Pure Dry Methanol
Using 0.5N HCl in 97% Methanol

No.	mml.	Sample	Condition	Int. pH	Mmols H^+ Absorbed Per 10 mml. Salcomine					
					pH 5.0	pH 4.5	pH 4.0	pH 3.5	pH 3.0	pH 2.5
1	10	SL-174	Oxidized	8.98	9.2	9.5	9.7	9.8	9.8	10.0
		"	"	8.99	9.0	9.4	9.6	9.8	9.9	10.1
		"	Deoxidized	8.57	0.9	1.0	1.1	2.0	5.2	
		"	"	8.61	1.0	1.1	1.3	2.1		
		"	Deoxidized then titrated in air	9.10	6.2	6.7	7.3	7.7	8.5	9.6
		"	" " " "	9.19	7.5	7.9	8.2	8.5	9.8	
2	10	Rumford CP	Oxidized	9.34	9.0	9.3	9.4	9.5	9.7	9.9
		"	"	9.40	9.1	9.3	9.4	9.5	9.7	9.9
		"	Deoxidized	9.01	0.6	0.7	0.9	1.6	2.8	3.2
		"	"	8.99	0.5	0.6	0.9	1.6	3.5	4.2
3	10	L-1	Oxidized	8.71	4.4	5.0	5.5	5.9	6.3	6.6
		"	"	8.81	4.4	4.9	5.5	5.8	6.2	6.7
		"	Deoxidized	8.38	1.6	2.2	3.0	5.1		
		"	"	8.43	1.6	2.1	3.1	4.9		
4	10	L-2	Oxidized	8.77	5.9	6.5	6.9	7.3	7.6	7.9
		"	"	8.83	5.8	6.4	6.7	7.1	7.4	7.7
		"	Deoxidized	8.57	1.7	2.1	3.3	5.7		
		"	"	8.53	1.8	2.2	3.2	5.7		

Section III E

Table II

Titration of Salcomine Components Suspended in Anhydrous Methanol and Titrated Potentiometrically with 0.5 N NaOH in 90% Methanol or 0.5 N HCl in 97% Methanol at Room Temperature Unless Otherwise Indicated ($CoCl_2 \cdot 6\ H_2O$ Used in All Experiments Except 10)

No.	Sample	Atm.	Init. Inflection pH	1st Break Half-way pH	1st Break Inflection pH	1st Break Inflection mml.	2nd Break Half-way pH	2nd Break Inflection pH	2nd Break Net Inflection mml.	Return Titration**** Hysteresis	Return Titration**** Half-way pH	Return Titration**** Inflection pH	Return Titration**** Inflection mml.
1	$\phi OH \cdot CHO$ (20 mml.)	air	4.0**	9.2	10.0*	18.7							
2	$H_2^+N \cdot C_6H_4 \cdot NH_2^+$ (10 mml.)	air	4.0**	7.0	8.2	9.7	9.6	10.4	9.9				
3	$CoCl_2$ (10 mml.)	air	4.0**	7.0	9.5	17.8							
4	$CoCl_2$ (10 mml.) + $\phi OH \cdot CHO$ (19.8 mml.)	air	4.0**	6.6	8.8*	19.8				None			
5	$H_2^+N-C_6H_4-NH_2^+$ (10 mml.) + $\phi OH \cdot CHO$ (20.7 mml.)	air	4.0**	5.4	9.7*	20.9				None			
6	$H_2^+N \cdot C_6H_4-NH_2^+$ (10 mml.) + $CoCl_2$ (10.55 mml.)	N_2	4.0**	5.1	6.8	19.6	8.1	10.2*	13.3	None			
7	$H_2^+N \cdot C_6H_4-NH_2^+$ (10 mml.) + $CoCl_2$ (10 mml.)	air	4.0**	5.2	6.5	17.3	7.5 9.1	8.5 9.7	8.8 3.7***	Marked	6.0	4.0	13.9
8	$H_2^+N-C_6H_4-NH_2^+$ (10 mml.) + $\phi OH \cdot CHO$ (19.1 mml.) + $CoCl_2$ (11.1 mml.)	N_2	2.9**	5.1	7.5*	29.1	8.5	9.5*	5.2	Slight			
9	$H_2^+N-C_6H_4-NH_2^+$ (10 mml.) + $\phi OH \cdot CHO$ (20.1 mml.) + $CoCl_2$ (10 mml.)	air	2.4**	3.5	4.5	19.3	None	(10.2)	(24.0)	Marked	None	(4.5)	(22.5)
10	$CoCl_2$ (10 mml.) + $(\phi OH \cdot CH=N-CH_2-)_2$ (12 mml.)	air	1.9	2.4	4.7	10.6	6.8	8.6	8.1				

*Not sharp

**Preacidified; pH value given is for inflection at end of titration for free H^+

***3rd Break

**** See Note on 7

1259921

Description of Table II

Note on (1)

When 20 mml. HCl in 85% methanol was titrated under the conditions of Table II only 0.2 mml. OH^- was absorbed between pH 2.5 and pH 4.0; and 0.05 mml. OH^- absorbed from pH 4.0 to pH 10.5 (the corresponding figures for aqueous HCl were 0.4 and 0.1 mml.).

20 mml. benzaldehyde in methanol absorbed $<$0.2 mml. OH^- from pH 7.5 to pH 10.5.

20 mml. phenol in methanol absorbed 0.2 mml. OH^- from pH 4 to pH 7.5 and 4.6 mml. from pH 7.5 to pH 10.8 (the corresponding figures for aqueous phenol were 0.3 and 20.1 with inflection at pH 10.8 not sharp).

Note on (4)

The compound, 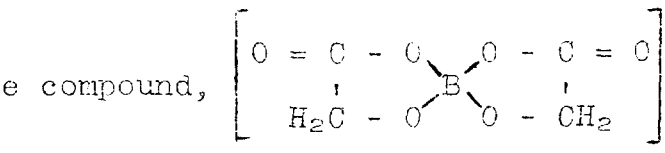 K, has been obtained in crystalline condition and its solutions studied carefully (see also Diehl, Chem. Rev., 21, 49 (1937)). Using the procedure of Table II, both the compound and its components when mixed, respectively, gave accurately reproducible curves corresponding exactly to the titration of the separate components; that is, there was no evidence of the chelate compound in solution according to our procedure. According to this technique, then, it appeared that only a rather marked tendency to combine was recorded and the difference between curve 4 as compared with curves 1 and 3 indicated a strong tendency toward compound formation (with increasing pH) which, however, was readily reversed (with decreasing pH).

Note on (5)

10 mml. salicylald-ethylenediimine (init. pH 8.1) on titration with acid absorbed 0.2 mml. H^+ to pH 5 and 2.5 mml. H^+ to pH 4 due to hydrolysis; in a separate experiment, the imine absorbed 0.5 mml. OH^- to pH 11 and after 1/2 hour back titration to pH 4 indicated no hydrolysis.

Note on (6)

The complex formed in this system was evidently decomposed, completely and rapidly, on acidification.

1259922

Note on (7)

The total titration from pH 4.0 to pH 9.7 was 17.3 + 8.8 + 3.7 = 29.8 mml. (and from pH 6.5 to pH 9.7 was 8.8 + 3.7 = 12.5 mml.) while the total back titration from pH 9.7 to pH 4.0 was 13.9 mml. The quantitative relations indicated that the reactions involved in breaks 2 and 3 were easily reversed but the reaction to break 1 was not readily reversed.

Note on (8)

The titration behavior of (II-8) is shown in Fig. III, upper left. The upper curve (in each case) is for hydroxyl ion addition, the lower curve for hydrogen ion addition. The only curves which cross are those for (II-8a). The horizontal distance between the curves of each pair shows approximately the net absorption of OH^-.

When the amount of aldehyde added was halved (Fig. III (II-8a)), the 1st inflection became much more sharply defined, the absorption of H^+ to the 1st inflection was decreased to 22.0 mml. and to the 2nd inflection was increased to 9.3 mml. Slight hysteresis on return titration.

Note on (9)

Increasing the pH above 4.5 produced no 2nd inflection to pH 10.2; on back titrating the added OH^- above pH 4.5 was titrated smoothly, but the initial reaction to the 1st inflection (pH 4.5) did not reverse (Fig. III (II-9)).

When the amount of aldehyde added was halved, the curve was changed markedly (Fig. III (II-9a)): the 1st break was decreased to 8.9 mml. (half way pH, 4.2; inflection pH 4.8) a second break appeared with 13.0 mml. (half way pH, 5.2; inflectiin pH, 6.8) and a third break developed with 10.5 mml. (half way pH, 8.2; inflection pH, 9.9). Hysteresis was marked on the return titration: halfway pH, 6.8; inflection pH, 4.0; 13.0 mml. Evidently the reaction between the second and third breaks was very readily reversed, the reaction between the first and second less readily, and the reaction to the first break was not reversed at all.

1259923

Note on (10)

Salicylaldehyde-ethylenediimine and Co^{++} showed a very large tendency toward compound formation according to this technique. Most clearly defined results were obtained using nearly anhydrous conditions. The data of (II-10) were obtained with $CoCl_2 \cdot 1.89\ H_2O$ and 0.5N $NaOCH_3$ in anhydrous methanol (instead of 0.5 NaOH in 90% methanol). No reverse titration was attempted.

1259924

Section III E

Table III

Titration of Possible Salcomine Primary Oxidation Products Suspended in Anhydrous Methanol and Titrated Potentiometrically with 0.5 N NaOH in 90% Methanol or 0.5 N HCl in 97% Methanol at Room Temperature Unless Otherwise Indicated

No.	Sample	Atm.	Init. Inflection pH	1st Break Half-way pH	1st Break Inflection pH	1st Break Inflection mml.	2nd Break Half-way pH	2nd Break Inflection pH	2nd Break Net Inflection mml.	Return Titration Hysteresis	Return Titration Half-way pH	Return Titration Inflection pH	Return Titration Inflection mml.
1	ϕOH·COOH (20 mml.)	air	2.5	5.3	7.3	19.7				None	5.5	3.0	20.0
2	ϕOH·COOH (20 mml.) + NH_3 (21.4 mml.)	air	2.5**	4.9	7.0	20.2	8.8	10.6	20.0***				
3	$CoCl_2$ (10 mml.) + NH_3 (10.9 mml.)	air	2.5**	6.9	7.8*	16.8	8.8	10.2	10.7	None			
4	$CoCl_2$ (10 mml.) + ϕOH·COOH (15.7 mml.) + NH_3 (20.5 mml.)	air	2.5**	4.8	7.2	27.1	8.6	10.5	18.7	None			
5	ϕOH·CHO (10 mml.) + NH_3 (10 mml.)	N_2	3.0**	9.0	10.1*	10.0				None			
6	$CoCl_2$ (10 mml.) + ϕOH·CHO (9.5 mml.) + NH_3 (8.1 mml.)	air	2.9**	5.4	7.1*	14.2	8.3	10.0	10.5	None			
7	n B-NH_2 (10 mml.)	air	2.0**	9.6	10.7	10.0				None			
8	ϕOH·CHO (10 mml.) + n B-NH_2 (9.9 mml.)	air	2.0**	4.5	10.0	9.8				None			
9	$CoCl_2$ (10 mml.) + n B-NH_2 (18.4 mml.)	air	2.5**	7.3	8.4	16.5	9.7	10.6	18.3	None			
10	$CoCl_2$ (10 mml.) + ϕOH·CHO (9.1 mml.) + n B-NH_2 (10.2 mml.)	air	2.1**	5.0	6.6	8.6	7.6 9.4	8.5 10.1	11.5 6.0****	Marked	6.2	5.0	15.7
11	ϕOH·$CONH_2$ (10 mml.)	air	7.0**	9.3	10.3	9.8				None			
12	$CoCl_2$ (10 mml.) + ϕOH·$CONH_2$ (16.6 mml.)	air	3.7	7.0	8.2	16.1	9.4	10.0*	10.5	None			
13	$CoCl_2$ (10 mml.) + ϕOH·$CONH_2$ (9.5 mml.)	air	3.6	6.9	8.5	17.6	9.4	10.0*	4.6	None			
14	$CoCl_2$ (10 mml.) + ϕ$CONH_2$ (10 mml.)	air	6.0**	7.0	8.8	16.3							
15	$(ϕOH·CONH·CH_2-)_2$ (10 mml.)	air	7.1	9.7	10.6*	15.4				None			
16	$CoCl_2$ (10 mml.) + $(ϕOH·CO·NH·CH_2-)_2$ (11.3 mml.)	air	3.4	7.0	8.5*	18.3	9.2	9.8*	5.9	None			
17	$CoCl_2$ (10 mml.) + $(ϕOH·CONH·CH_2-)_2$ (10.3 mml.)	air	3.0	6.8	8.3	18.6	(2nd Break very poorly defined (Heated at 60° C. for 30 min., at) (pH 10.5)			Marked	7.9	4.7	
18	$CoCl_2$ (10 mml.) + ϕOH·CH=NOH (11.5 mml.)	air	3.1	4.9	9.0	20.2				Marked	4.8	2.7	10.1
19	$CoCl_2$ (10 mml.) + ϕOH·CH=NOH (21.8 mml.)	air	2.5	5.1	9.0	23.9				Marked	4.5	2.8	3.5

*Not sharp
**Pre-acidified
***As compared with 21.4 mml. taken
****3rd Break

1259925

Description of Table III

Note on (2)

In this case where no complex formation would be expected, the curves were smooth and, at the inflection points, were very steep.

Note on (3)

This curve showed only faint indication of complex formation with no evidence at all of cobalt ammine formation.

Note on (4)

No more than loose, readily reversed combinations indicated. When heated together to 60°C. at pH 8 the titration behavior was unchanged.

Note on (5)

The only evidences of combination were the yellow color appearing (reversibly) above pH 3 and complete repression of titration of ØOH·CHO between pH 9 and 10 (see Table II-1). Identical results were obtained under air atmosphere. The corresponding curves for Ø·CHO (10 mml.) + NH_3 (10 mml.) were identical to III-5.

Note on (6)

Comparison with data of Table I, 4 and 9 (note) indicated a loose easily reversible combination involving all three components. Comparable curves to III-6 were obtained using $Ni(NO_3)_2$ (10 mml.), ØOH·CHO (18.3 mml.) and NH_3 (13.7 mml.) since this combination was known to form a chelate (Diehl, Chem. Rev. 21, 70 (1937)). The results for the two systems were quite similar.

Note on (7)

It was conceivable that Salcomine might cleave in such a way as to form a primary amine rather than ammonia. Normal butyl amine was a convenient substance to use in a study of the relative behaviors of NH_3, primary monoamine and ethylenediamine with salicylaldehyde and cobalt.

Note on (8).

The amine obviously formed a compound quantitatively with salicylaldehyde, the reaction being very rapid and

1259926

readily reversed. In the case of benzaldehyde, compound formation was much slower as was clearly shown by titration curves.

Note on (9)

The curves gave no evidence of complex formation (compare III-3 and II-7).

Note on (10)

Comparison of these curves with (III-7, 8, 9) indicated (III-10) to be a combination of (III-8) to first break and (III-9) at the start of the second break. Increasing the pH beyond 10.5 resulted in marked irreversible absorption of OH^- not observed in the binary mixtures; the reverse titration showed inflections at pH 8.9 and 3.0 (half way pH, 6.2) the absorption between inflections being 15.7 mml. (The total OH^- added between pH's 2.1 and 10.1 (see Table III-10) was 26.4; 26.4-15.7 = 10.7 mml. difference.) The total OH^- added between pH's 2.1 and 10.5 (end of titration) was 28.8 mml. The total H^+ added on back titration to pH 3.0 was 19.9 mml.; 28.8-19.9 = 8.9 mml. net mml. absorption of OH^-.

When $CoCl_2$ (10 mml.) + nB-NH_2 (18.4 mml.) + $\phi OH \cdot CHO$ (19.8 mml.) was titrated as above, inflections appeared only at pH's 3.5 and 10.3 during OH^- addition, the net absorption being 37.2 mml.; the reverse titration showed inflections at pH's 9.4 and 3.5 with net H^+ absorption 21.3 mml. 37.2-21.3 = 15.9 as compared to 10.7 above.

Note on (11)

Salicylamide evidently titrated quantitatively from pH 7.0 to pH 10.3. In back titrating with H^+ the titration required only 0.1 mml. from pH 7.0 to pH 2.5, even after heating the solution for 1 hr. at 100°C. with 50 mml. excess OH^-; comparison with (III-2) and II-1 note) indicated that salicylamide was extremely stable to alkaline hydrolysis, there being no evidence of any reaction under these conditions.

Benzamide absorbed neither H^+ nor OH^- on potentiometric titration at room temperature.

Note on 12, 13 and 14

Compound formation between $\phi \cdot OH \cdot CONH_2$ was indicated most clearly by the lowering of the initial

pH (for example in (III-12) the pH's of amide solution, $CoCl_2$ solution and the mixture of the two were, respectively, 6.4, 5.5 and 3.6) and inhibition of precipitation (in (III-14)) copious precipitate formed when 2.5 mml. OH^- had been added; in (III-12 and 13) the precipitate was never copious and did not appear until more than 15 mml. OH^- had been added.

There was no evidence (as shown by shifts in the return titrations) of hydrolysis of $\phi OH \cdot CONH_2$ by excess OH^- at room temperature in the presence of Co^{++}.

When 10 mml. $CoCl_2$ + 20 mml. $\phi OH \cdot CONH_2$ (corresponding to III-12) were heated together in air at pH 11 and 60°C. for 15 min., there was no change in titration behavior from (III-12).

Note on (15)

One of the products formed on the addition of an atom of oxygen to Salcomine might be the half-amide-half-imide. Several attempts were made to synthesize the monoamide from methyl salicylate and ethylenediamine, changing the material ratios and other conditions; in all cases the compound isolated proved to be the diamide (white crystals, m.p. 181.0°C.). (Attempts by several laboratories to prepare unsymmetrical Schiff's bases from ethylenediamine always resulted in separation of the corresponding symmetrical substances in the solid phases.)

The diamide was only partially neutralized at pH 10.6 (where the inflection was poorly defined). The compound was evidently quite stable to alkaline hydrolysis at temperatures up to 60°C. (see III-11 note).

Note on (16)

The titration behavior of Co^{++} plus $(\phi OH \cdot CONH\text{-}CH_2\text{-})_2$ was similar to that of Co^{++} plus $\phi OH \cdot CONH_2$ up to about pH 10.0. The red solution was homogeneous until about 12 mml. OH^- had been added when a light blue gray precipitate appeared; above pH 10, however, the solution turned deep blue; on stirring for 1 hour at room temperature the precipitate nearly all dissolved with the formation of a deep purple colored solution. On titration with acid the curve retraced itself without hysteresis.

A similar experiment under nitrogen (including heating 30 min. at 60°C. at pH 10.5) gives identical results.

Note on (17)

The only difference between (III-16) and (III-17) was that in the latter case the solution was heated at 60°C. for 30 min. at pH 10.5. During this period the pH dropped to 10.0 and on back titration with H^+ showed a net disappearance of OH^- of 13.1 mml. at the inflection point (pH 4.7). However, on continuing the titration, H^+ was absorbed slowly, and another inflection was observed at pH 2.7 (solution colored purple) the net H^+ absorbed between these inflections corresponding to 11.8 mml. of the missing OH^-. Evidently on heating at 60°C. in air, the solution was oxidized with absorption of OH^-; on reacidifying to pH 2.7 the solution reduced again to substantially its original condition. At the end a small amount of black acid-insoluble material remained (which was soluble in alkali). The corresponding experiments with salicylamide-cobalt and ammonium salicylate-cobalt indicated no oxidation on heating in air (see notes, III-4 and III-12).

Note on (18) and (19)

The reactions of salicylaldoxime with metal ions such as those of cobalt were known to yield relatively stable compounds; since in addition it was conceivable that oxygenated nitrogen might form during degradation, yielding substances related to salicylaldoxime, a series of experiments was made on salicylaldoxime-cobalt. The pure oxime is a neutral, white crystalline solid which showed no absorption of H^+ or OH^- in the pH range 2-10; above pH 10 a small amount of OH^- was absorbed. 10 mml. of oxime in the presence of equimolal Co^{++} under nitrogen formed a compound giving an orange precipitate (on addition of ca. 17 mml. OH^-) which redissolved suddenly at pH 10; on back titration there was no hysteresis, the precipitate reappeared and dissolved again at pH's 8.5 and 4.0 respectively. When the experiment was repeated in air, the titration with OH^- was identical but the back titration showed hysteresis with a net absorption of 10 mml. of OH^-. The oxidized compound was relatively stable in acid solution showing little hydrolysis on standing at pH 3. The "permanent" absorption of 10 mml. of OH^- in (III-18) and 20 mml. of OH^- in (III-19) suggested that at least two different oximes of Co^{+++} (possibly mono- and di-) were stable.

Section IIIE
Table IV

Comparison of Potentiometric Titration of Salcomine (Table I) with Karl Fischer Titration and Maximum Salcomine Content.
(All analytical values in mml.)

No.	mml.	Sample	Oxid. Titer to pH 2.5	Deoxid. Titer to pH 5.0	Difference	Deoxid. K.F. Titer X2 (Table I Sect.IIIC)	Max. Salcomine Content (Table VI Sect.IIIB)
1	10	SL-174	10.1	1.0	9.1	9.8	9.2
2	10	Rumford CP	9.9	0.6	9.3	9.8	9.3
3	10	L-1	6.7	1.6	5.1	7.0	6.8
4	10	L-2	7.8	1.8	6.0	7.2	7.4

Section IIIE
Figure I

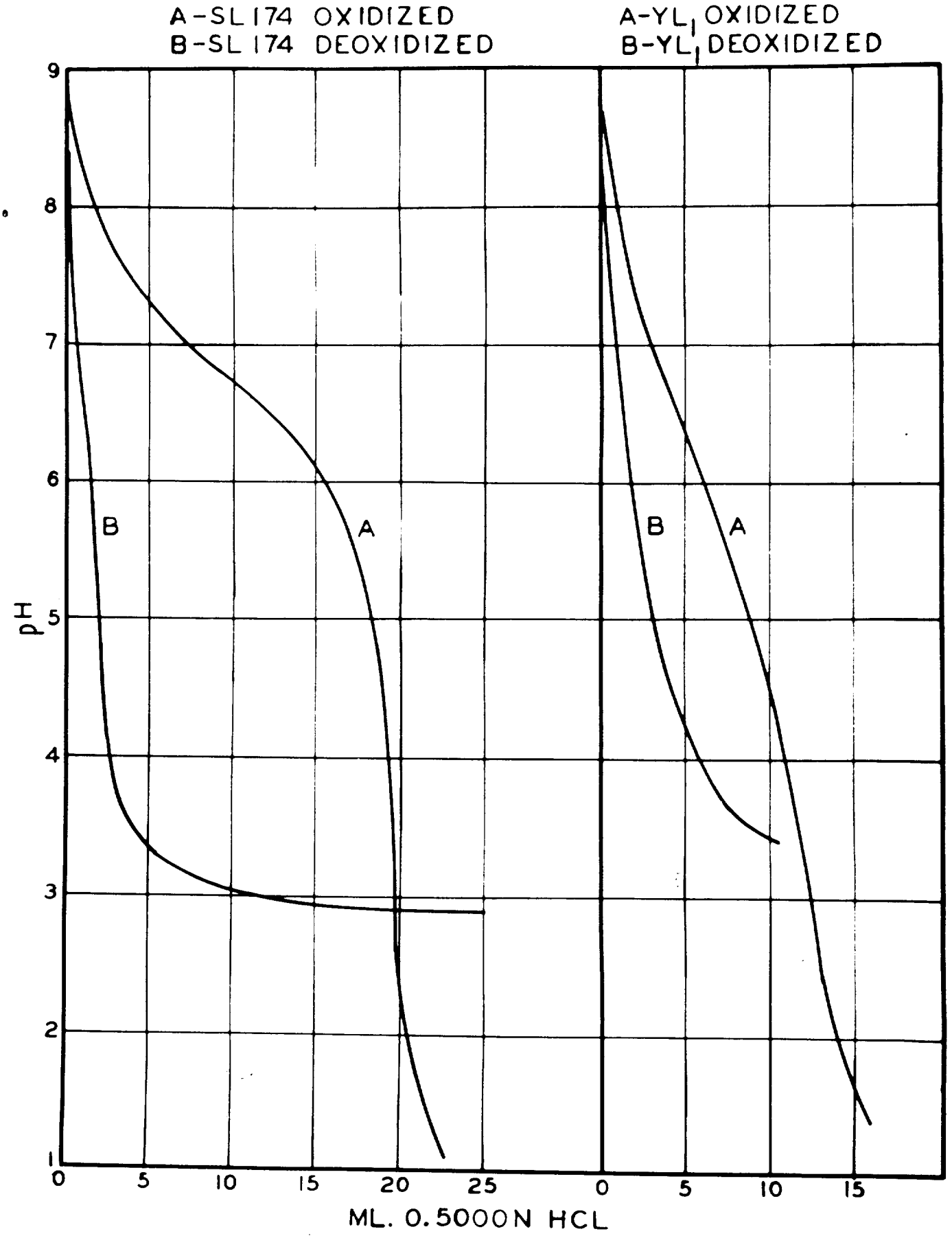

1259931

Section IIIE
Figure II

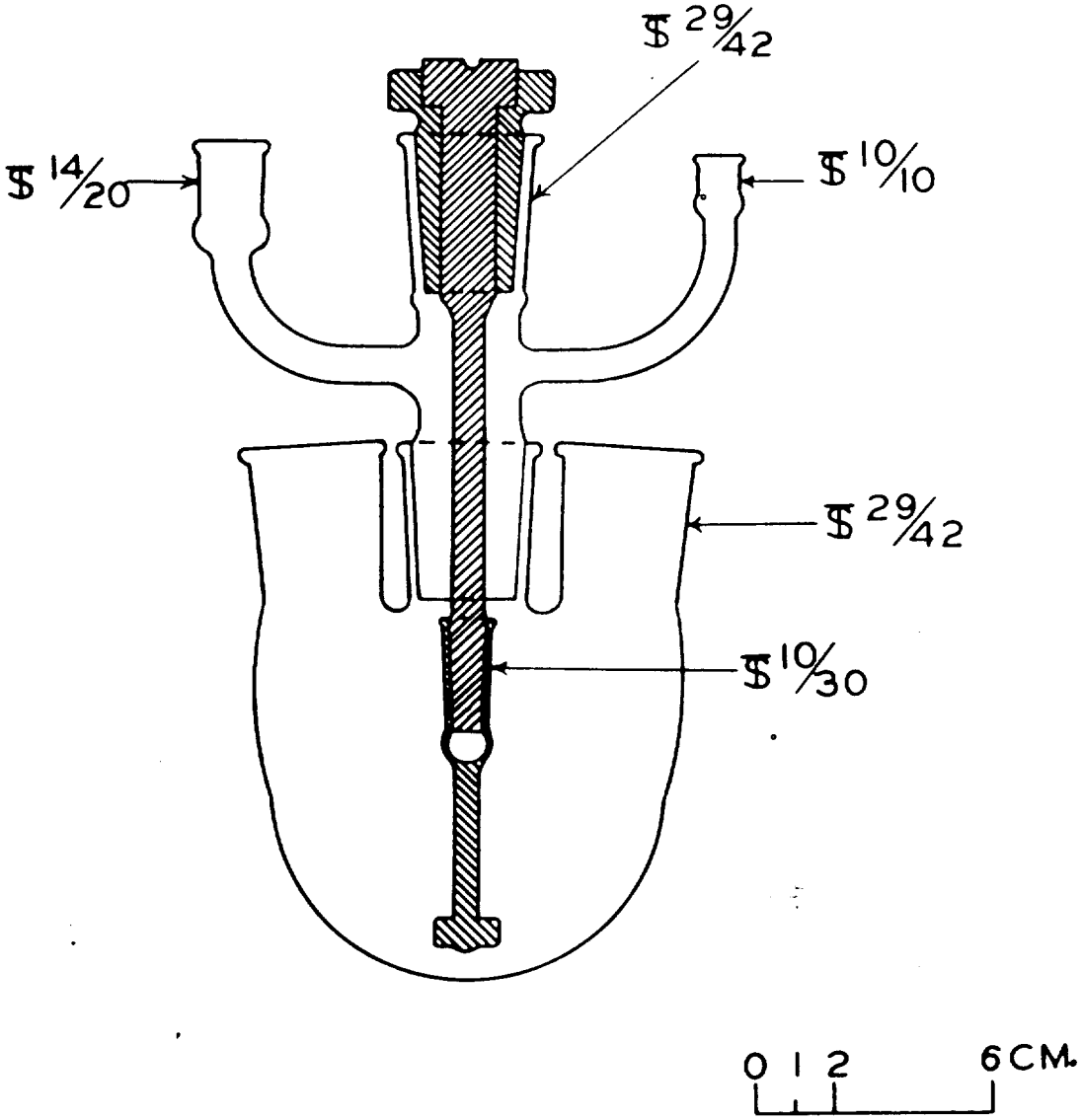

1259932

Section IIIE
Figure III

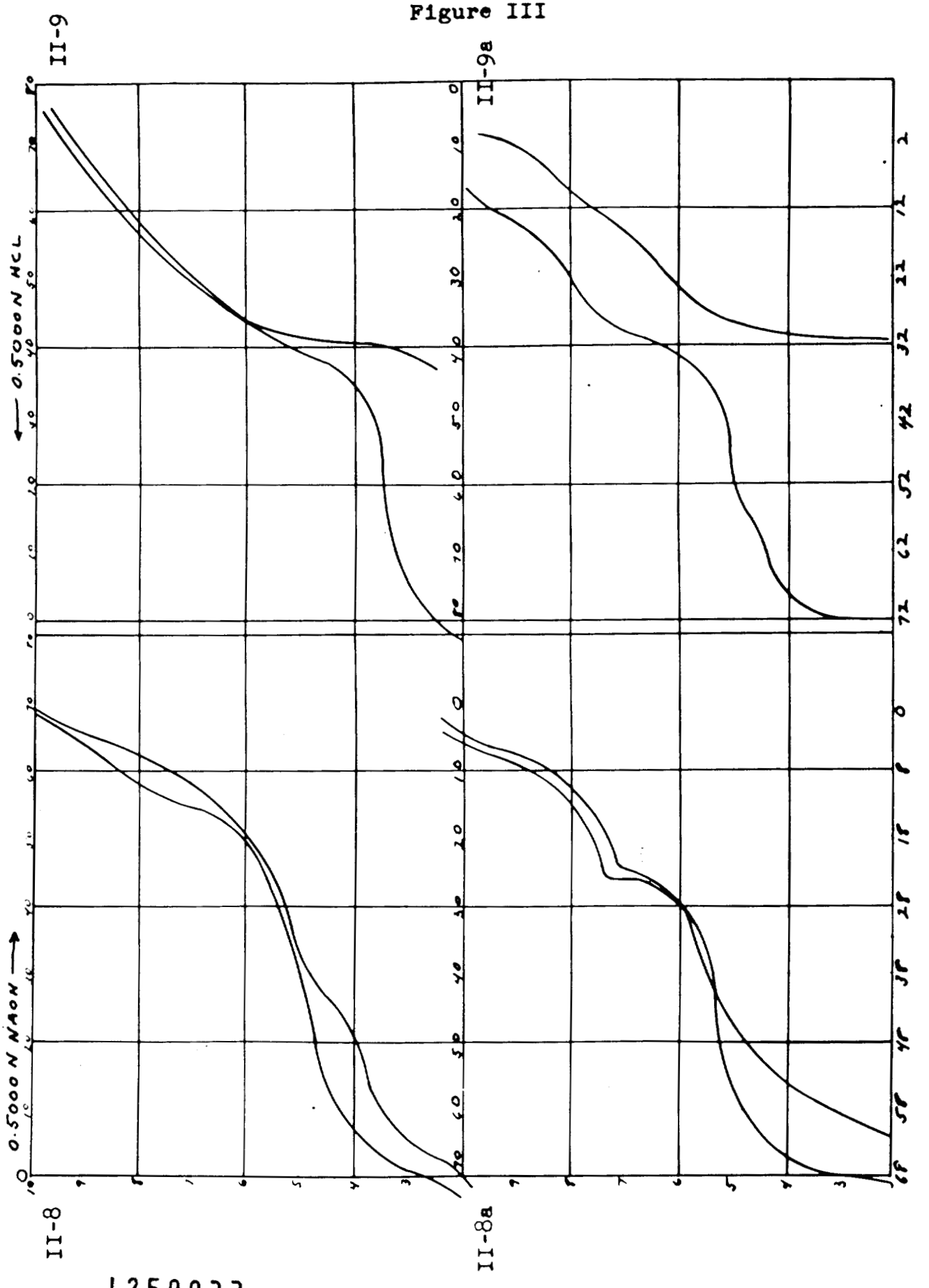

1259933

F. Alkali Absorption by Salcomine

The procedure was identical with that of potentiometric titration IIIE except that 10 mml. of (oxidized) sample was stirred for 15 min. with 20 ml. of CO_2-free 2N NaOH in methanol (40 mml.) before titrating.

Results are shown in Fig. I and Table I.

The data indicated that all the cobalt titrated between pH 8.9 and 3.0 in the ratio 1.0 mole H^+ per mole cobalt for both undegraded and degraded Salcomine; and this indicated that all cobalt in each sample was contained in compounds containing both aromatic nuclei and nitrogen.

The absorption of OH^- to the first inflection was evidently associated with hydrolysis. The OH^- absorbed by SL-174 and Rumford CP checked fairly well with the deoxidized titers, Table IV, Section IIIE, while the OH^- absorbed by L-1 and L-2 added to the oxidized titers, Table IV, Section IIIE, gave 9.4 and 9.5 mml. total respectively (instead of 10).

Section IIIF
Table I

Caustic Absorption and Potentiometric Titration of Salcomine (All analytical figures in mml.)

No.	mml.	Sample	1st Inflection pH	OH^- Absorbed	2d Inflection pH	H^+ Absorbed between Inflections
1	10	SL-174	8.9	1.0	3.4	10.3
2	10	Rumford CP	8.6	0.3	3.1	9.8
3	10	L-1	8.7	2.7	3.0	10.6
4	10	L-2	8.6	1.7	3.3	10.0

1259935

Section IIIF
Figure I

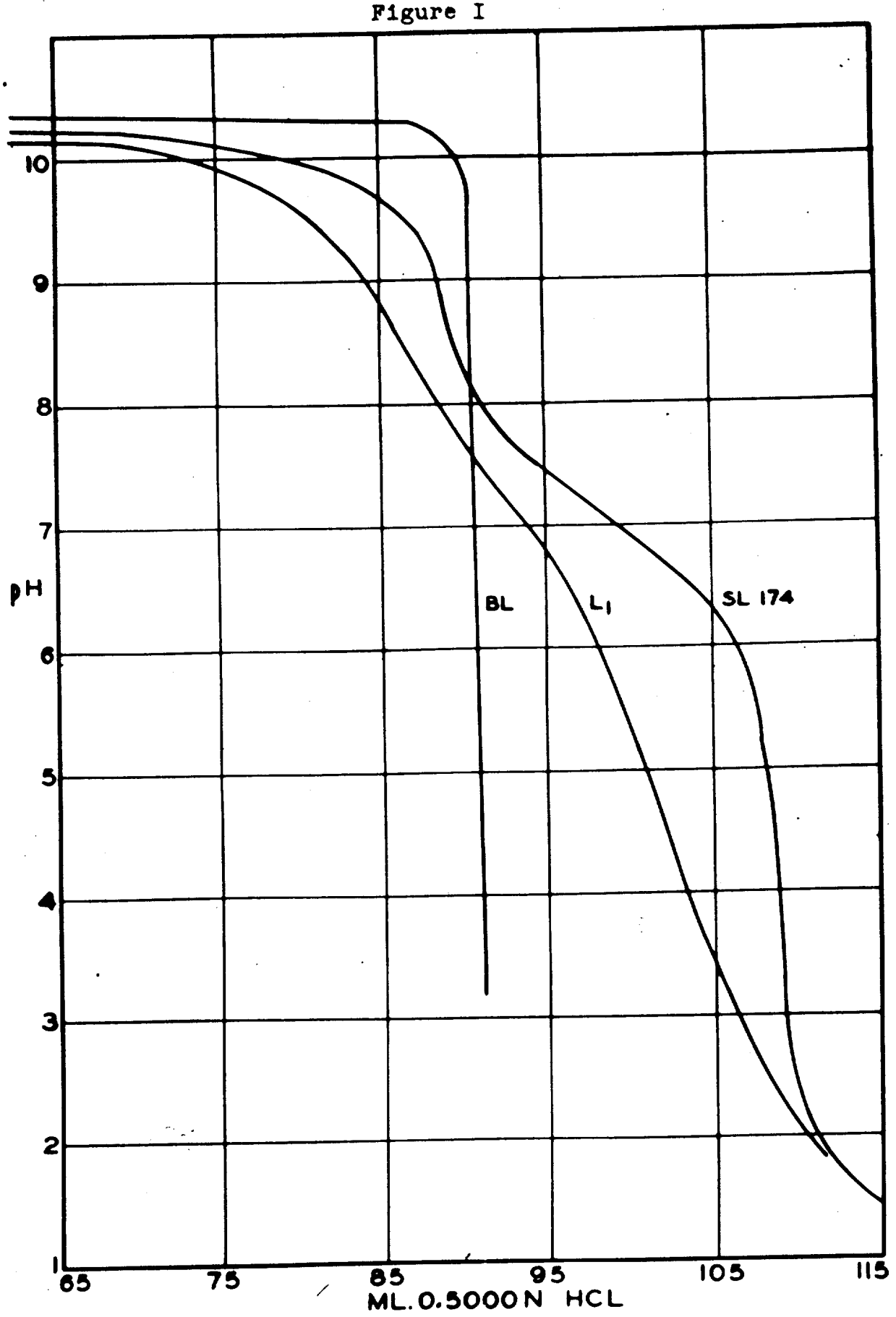

1259936

IV. DISCUSSION

(1) It seemed evident from the distillation analyses of Section IIIB, combined with the elemental analyses of Section IIIA that the components of both undegraded and degraded Salcomine (not volatile directly at 110°C.) consisted (after hydrolysis) of cobalt, ethylenediamine and salicylaldehyde with varying amounts of organic acids and ammonia, aldehyde degradation products and ethylenediamine degradation products. The aldehyde degradation products were represented principally by the aqueous acid-insoluble and the ethylenediamine degradation products by the residual nitrogen. Evidently the residual nitrogen was associated with some formerly aldehydic material; and part of both the aldehyde and ethylenediamine degradation products may have been formed during analysis. The material balances indicated that no substantial amounts of other substances could be present and there was no apparent necessity to assume the presence of other compounds in the formation of the aldehyde, and ethylenediamine, degradation materials. The organic acids were predominantly salicylic and were all derived from salicylaldehyde. Such compounds as the amides (which were extremely difficult to hydrolyze, Table III, Section IIIE) and oximes could not have been present in amounts exceeding a part of the small amount of residual nitrogen (a) soluble in ether and (b) contained in the aqueous-acid-insoluble residue. Polyhydroxy aromatics were not present in significant amounts.

(2) From Table VI, Section IIIB, it appeared that the maximum Salcomine which could be present was determined by the ethylenediamine plus residual nitrogen content of the samples, the left-over fragments giving at least 1 NH_3 and 1 (aldehyde + acid) per cobalt, but considerably less than 2 NH_3 and 2 (aldehyde + acid) per cobalt. For the degraded samples, the ammonia was about equal to the left-over (aldehyde + acid). The last column of Table VI, Section IIIB suggested that the exact ammonia/aldehyde ratio might depend somewhat on the history of the sample between the times of sampling and distillation. Part of the missing components in the volatile at 110°C. (Table III, Section IIIA) may be organics.

(3) From Table II, Section IIIC, it appeared that the Karl Fischer titration was a measure of the total (including residual) ethylenediamine content; and from Table IV, Section IIIE, it appeared that this total ethylenediamine was coordinated and probably practically

entirely in the form of Salcomine; i.e., the Karl Fischer titer was a nearly quantitative measure of the total substances having the formula of Salcomine in these samples*.

(4) According to Table IV, Section IIIE, the undegraded samples may have contained a small amount of coordinated cobalt with ammonia, giving the deoxidized titer and causing the difference between the max. Salcomine content and the K.F. titer. The degraded samples evidently contained some hydroxy-Salcomine (from the deoxidized titer and the closer checks between oxidized titer, K.F. titer and max. Salcomine content)**.

(5) The chemically degraded portions of Samples L-1 and L-2 were coordinated into compounds giving no oxidized titer until treated with caustic (Table IV, Section IIIE and Table I, Section IIIF).

(6) The capacity of Samples L-1 and L-2 was only 9-12% of the possible maximum (Table III, Section IIIA) although they contained around 70% of material having the formula of Salcomine. Evidently inert "isomeric" material was present in large amount. The data of Table II, Section IIIE (8 and 9) and Table IV, Section IIIC (12 and 13) suggested the existence of undescribed compounds having the formula of Salcomine.

In this connection the behavior described in Section IIIF was interesting. The absorption of OH^- by "undegraded" samples SL-174 and Rumford CP was probably explained by the hydrolysis of the ammonia compounds present. For samples L-1 and L-2 it seemed probable that a "self-compensated" structure was present, perhaps resembling the cobaltic compound,

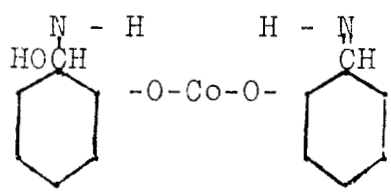

This material might behave in the observed manner and there were no obvious analytical anomalies introduced by its (hypothetical) presence aside from its probable instability. Here again, further work would be interesting.

- - - - - - -

*The structural formula could correspond to II, III or IV, Section IIIC (pg. 13) except as limited by (4). In speaking of "Compounds of Salcomine Formula" and Salcomine "isomers" in this report, substances having added oxygen or hydroxyl to the cobalt were included.

**However, the hydroxy-Salcomine could not correspond to over 1/2 the deoxidized titer (since it presumably had twice the K.F. titer of Salcomine or oxy-Salcomine) and even then the remaining deoxidized titer would have to correspond to uncoordinated cobalt without K.F. titer. Further work on this aspect of the problem would be interesting.

V. MECHANISM OF DEGRADATION TO FORM FRAGMENTS

All the above suggested a picture of the degradation of Salcomine (to give samples such as L-1 and L-2) about as follows:

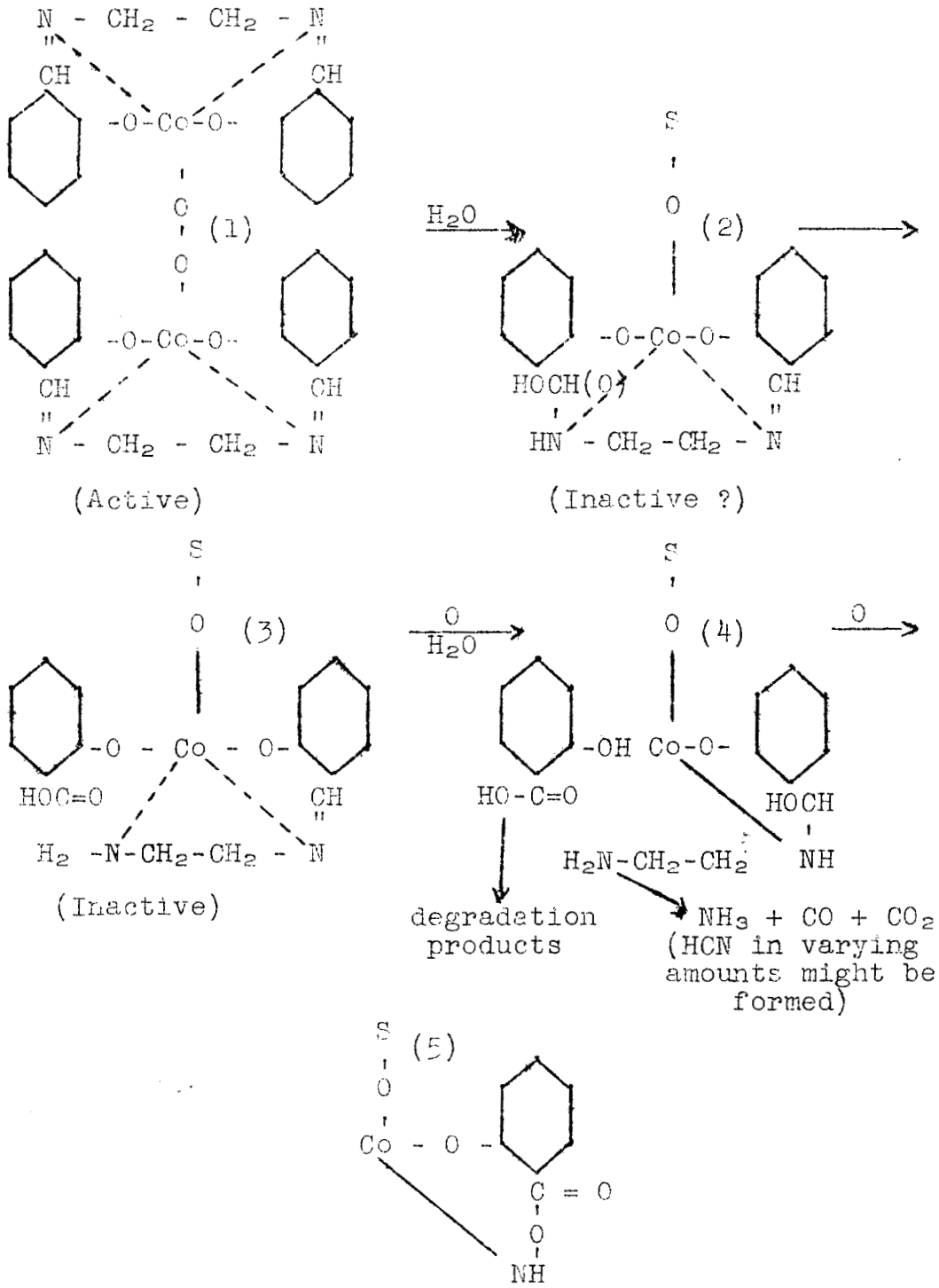

1259939

The oxygen-association complex (2) was introduced on the basis of the results presented in Section IIID, page 15.

Products corresponding to all of the steps (3), (4), (5) above were apparently found in the degraded products.

VI. RECOMMENDED PROCEDURE FOR CHEMICAL ANALYSIS OF DEGRADED SALCOMINE

Of the elemental analyses (Sect. IIIA), the determination of cobalt is probably most important, as it gives a uniform basis for comparing all samples; next most important would be the nitrogen analysis, since the N/Co ratio indicates the minimum chemical degradation (and makes possible a nitrogen balance if the distillation analysis should be carried out). Determination of capacity is of fundamental importance in any analysis.

The distillation analysis (Sect. IIIB) gives the most detailed information about the major components* of a sample, but is the most time-consuming. In those cases where a related series of samples is being investigated, only a selected few of the samples need be given the complete distillation analysis (steps (1), aldehyde, and (5), ammonia, might be required where the complete distillation analysis is unnecessary).

The Karl Fischer titration (Sect. IIIC) on deoxidized samples appears to be a measure of total ethylenediamine content (in the presence of cobalt)**. Since the ethylenediamine tends to be entirely coordinated in one of the forms of Salcomine, this titration is also a measure of the content in a sample of substances having the structure of Salcomine.

The results obtained by the remaining determinations, discussed in Sections IIID, IIIE and IIIF, help to round out the picture of the distribution of products in a degraded sample; however, the exact interpretation of these results is not completely understood and the methods should be used with discretion; this also applies to the determinations of free moisture by the various methods discussed

- - - - - - -

*Aldehyde, organic acid, ammonia, ethylenediamine, degraded aldehyde.

**And thus is a check on the ethylenediamine value determined by distillation analysis.

1259940

in Section IIIC. Finally, since the methods described above do not give detailed information as to the discrepancy between observed capacity and content of compounds having the structure of Salcomine, detailed chemical analyses by these methods may not be justified. It is therefore recommended, in general, that the first chemical analyses made according to this report be determinations of total Co, total N, capacity and Karl Fischer-titer-on-deoxidized-material; if there should be fair agreement between the capacity and Karl Fischer titer, then distillation analysis and possibly the other analyses might be of interest.

10/11/43

1259941