729450

IDO-17071

Issued: January 1964

SNAPTRAN 2/10A-3 POST-DESTRUCTIVE TEST REACTOR EXAMINATION, CLEANUP, AND SAFETY CONSIDERATIONS

by

R. D. Fletcher

REPOSITORY INEL

COLLECTION PUBLIC READING ROOM
U.S. DOE PUBLIC READING ROOM IDO

BOX No. UNIVERSITY PLACE

FOLDER IDO-17071

1255943

.H . 7 1962

SNAPTRAN 2/10-3 POST-DESTRUCTIVE TEST
ACTOR EXAMINATION, CLEANUP, AND SAFETY CONSIDERATIONS

MASTER

R. D. Fletcher

1255910

PATENT CLEARANCE OBTAINED. RELEASE TO THE PUBLIC IS APPROVED. PROCEDURES ON FILE IN THE RECEIVING SECTION

PHILLIPS 66

NATIONAL REACTOR TESTING STATION
IDAHO OPERATIONS OFFICE

TABLE OF CONTENTS

	Page No.
SUMMARY	1
I. INTRODUCTION	2
II. REACTOR DESCRIPTION	5
A. Description of Test Package	5
B. Nuclear Characteristics Prior to Destructive Test	9
III. SAFETY CONSIDERATIONS	10
A. General	10
B. Fuel Handling Safety	10
C. Chemical Hazards	12
IV. SAMPLE RECOVERY AND MONITOR RETRIEVAL	14
A. Priority Monitors and Samples	14
B. Other Monitors and Samples	17
V. REACTOR COMPONENT RECOVERY AND AREA CLEANUP	25
A. Fuel Recovery	25
B. Area Cleanup	26
VI. ANALYTICAL EXAMINATION	28
A. General	28
B. Component Distribution and Visual Inspection	28
C. Uranium Inventory	29
D. Beryllium Fragmentation	30
E. Hydrogen Analysis	30
F. Fission Product Inventory	31
G. Determination of the Hydride Fracture and Reactions	31
H. Physical Property Changes	34
I. In-Core Flux Wires and Activition Analyses	35
VII. CONCLUSION	36
VIII. APPENDIX	37
IX. REFERENCES	40

1255945

TABLE OF CONTENTS

Page No.

LISTS OF FIGURES

I-1	Mobot	3
II-1	SNAPTRAN 2/10A-3 Test Package	6
II-2	SNAPTRAN 2/10A-3 Fuel Rod	7
II-3	SNAPTRAN 2/10A-3 Reactor Cross Section	8
IV-1	Sampling Grid Test Cell Area	15
IV-2	Sampling Grid to 100 Meters	16
V-1	Post-Destruct Fuel Container	23
V-2	Post-Destruct Fuel Container Holder	24
VI-1	Particle Catch Can	32
VI-2	In-Core Flux Wire Locations	33

1255946

SUMMARY

The SNAPTRAN 2/10A-3 reactor, a slightly modified version of the SNAP 2/10A reactor, has been designed for investigating the nuclear safety aspects associated with immersion of the reactor core in water which is expected to result in a destructive power excursion. This report describes the post-test examination program to be carried out on the reactor fuel and components and the test area cleanup procedures to be employed following the destructive test. In addition, the nuclear safety considerations are also presented for all phases of the recovery operation, transportation to the examination area, and during examination of fuel materials in the hot cells and laboratories.

The post-test examination is intended to supply information which will aid in understanding the nature of the reactor disassembly process, provides supplemental data on the magnitude of the nuclear and mechanical energy released, and defines the physical condition and radiation levels of the reactor and its environs following a destructive power excursion.

Procedures are also presented for the safe test site cleanup including location and removal of all intact fuel elements and fuel fragments, recovery of structural parts of the reactor, and decontamination of the test area.

1255947

I. INTRODUCTION

This report describes the examination and cleanup programs which will follow destructive testing of the SNAPTRAN 2/10A-3 reactor. The SNAPTRAN 2/10A-3 reactor is a modified SNAP 2/10A flight machine and has been designed and built for the purpose of investigating the consequences of a nuclear accident resulting from immersion of the SNAP 2/10A reactor core in water. A description of the reactor package is presented in Section II "Reactor Description". The experimental program prior to the destructive excursion will include the following: (1) mechanical, electrical, and hydraulic checkout, (2) fuel loading, (3) static physics measurements, and (4) long period transient tests.

Following the destructive test a radiation survey of the test area will be made and special monitoring equipment and samples will be removed. The first entry will be made by the Mobot, a remotely controlled electromechanical track vehicle containing manipulators, TV cameras, a jib crane, and a fork lift. This unit which is shown in Figure I-1 is controlled by an operator located in the IET control room. If the post-test radiation levels are extremely high, the Mobot will be used for much of the initial radiation monitoring, reactor component recovery, and general site cleanup. All identifiable fuel and grossly contaminated structural material will be removed to reduce the radiation background to a tolerable level for personnel entry. Prior to personnel entry, however, an extensive survey will be made to insure that the reactor is safely shutdown and that no foreseeable event will lead to criticality.

All operations involving recovery of the reactor fuel, intact or fragmented, will be performed with the utmost care in order to prevent the occurrence of a nuclear incident. These operations include collection of the reactor debris on and outside the test pad, movement of the debris to the examination area, and all phases of the post-test examination in the hot shop and laboratories. Cadmium plated containers with sealed lids will be provided for safe fuel collection and transport. These containers are sized to contain a maximum of five fuel rods or the equivalent amount of fuel and are arranged on pallets to provide an infinitely safe configuration.

1255948

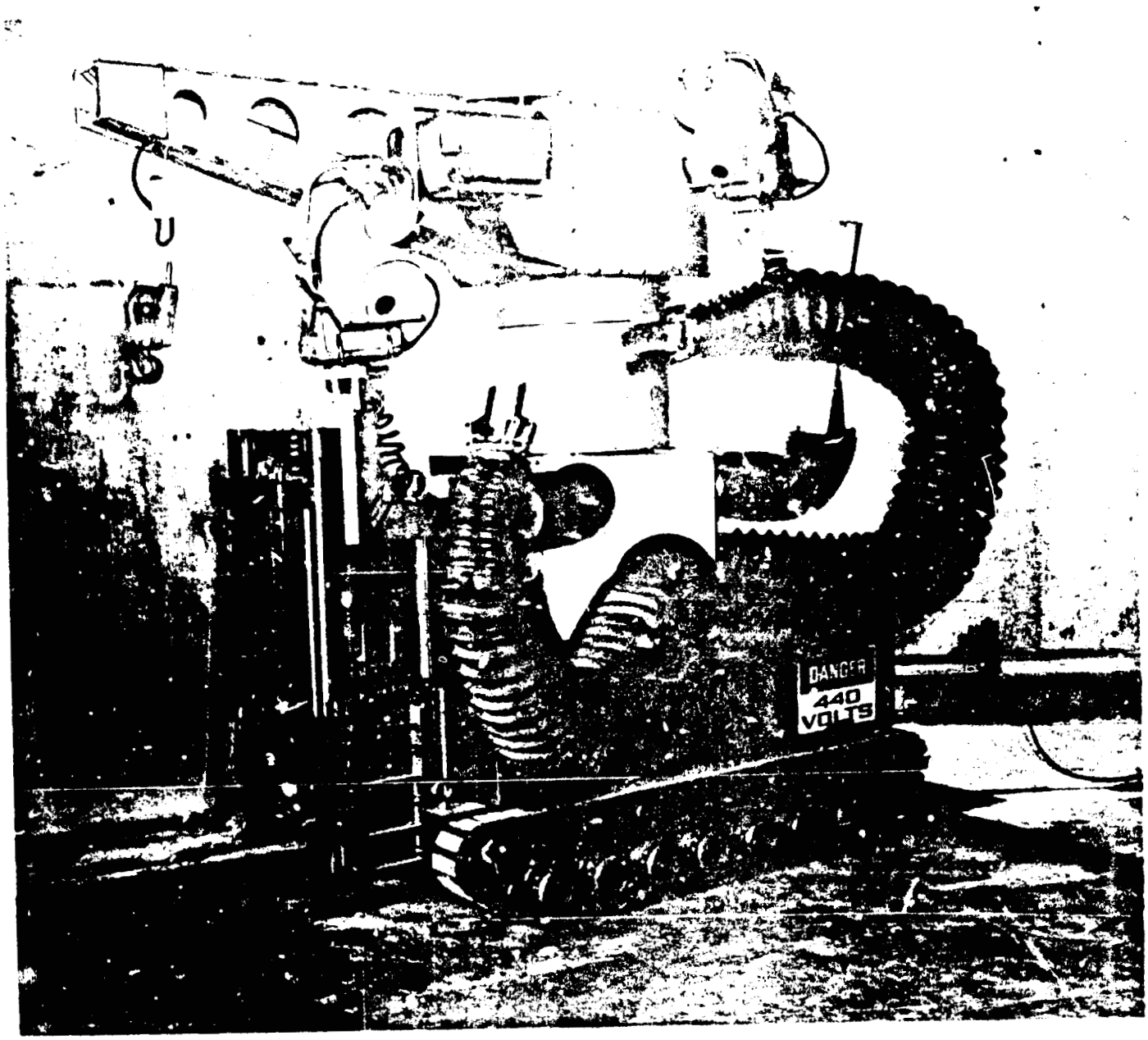

Fig. I-1 Motot

1255949

The post-test examination of the reactor fuel and components will be performed by the Metallurgy and Hot Cell Branch in the TAN Service Facilities (TSF) area and the CPP Analytical Branch at the Chemical Processing Plant (CPP). The TAN Metallurgy and Hot Cell Branch personnel will weigh and dimensionally check each fuel piece upon arrival at the TSF and examine each for marks, scratches, melted areas, and zirconium hydride fractures. A section will be made of each identifiable fuel piece for subsequent hydrogen and fission product analysis. Photomicrographs will be made of the fuel matrix to determine grain size and phase changes. Tests will be made on the cladding, fuel matrix, reactor vessel, and grid plates to ascertain changes in physical properties such as hardness, yield and tensile strengths.

The CPP Analytical Branch personnel will analyze the sectioned fuel for hydrogen content and fission product distribution. Water samples from the environmental tank will be analyzed for fission products, beryllium, and zirconium A description of the analytical program for the CPP Analytical Branch and the TAN Metallurgy and Hot Cell Branch is contained in Section VI.

The general program outline, nuclear safety considerations, and metallurgical examination requirements presented in this report are intended to provide sufficient background information for the Metallurgy and Hot Cell Branch to prepare detailed procedures for review by the Reactor Physics and Engineering Branch and by the SPERT-STEP Safeguard Committee.

1255950

II. REACTOR DESCRIPTION

A. Description of Test Package

The arrangement of the SNAPTRAN 2/10A-3 reactor test package prior to the destructive test is given in Figure II-1. It consists of the reactor core mounted on a pedestal in the center of the environmental tank and surrounded by a Binal poison sleeve. The environmental tank is 14 feet inside diameter, 10 feet high, and will be filled with water to 3.5 feet above the top of the reactor core. The tank is fabricated of steel and is backed by one foot of concrete at the top and two feet of concrete at the bottom to maintain the tank integrity during the destructive disassembly of the reactor. The superstructure shown in Figure II-1 supports the poison sleeve drive mechanism. The entire reactor assembly is mounted on a 4-rail dolly to facilitate movement of the test package to the Examination Area (TAN 607) following the destructive test.

The reactor fuel rods are an alloy of zirconium-hydride and 10 wt% of 93% enriched uranium. The rods are clad with 0.015 inch thick Hastelloy-N and have an outside diameter of 1.250 inches and a length of 12.25 inches. A typical fuel rod is shown in Figure II-2. The core consists of 37 fuel rods in the form of a hexagon. Beryllium filler pieces are used to adapt the sides of the core to the cylindrical reactor vessel. Figure II-3 shows a cross section of the reactor fuel rod arrangement, the location of the six beryllium filler pieces, the reactor vessel, and the binal control sleeve.

The reactor vessel is fabricated from 0.032 inch thick type 316 stainless steel and has an outside diameter of 8.94 inches. Precise positioning of the fuel rods with respect to each other and to the vessel is provided by upper and lower grid plates within the vessel. These plates are fabricated of Hastelloy-C. The cap and grid plate indexing pins shown at opposite ends of the fuel rod in Figure II-2 engage the grid plates for the precision positioning.

1255951

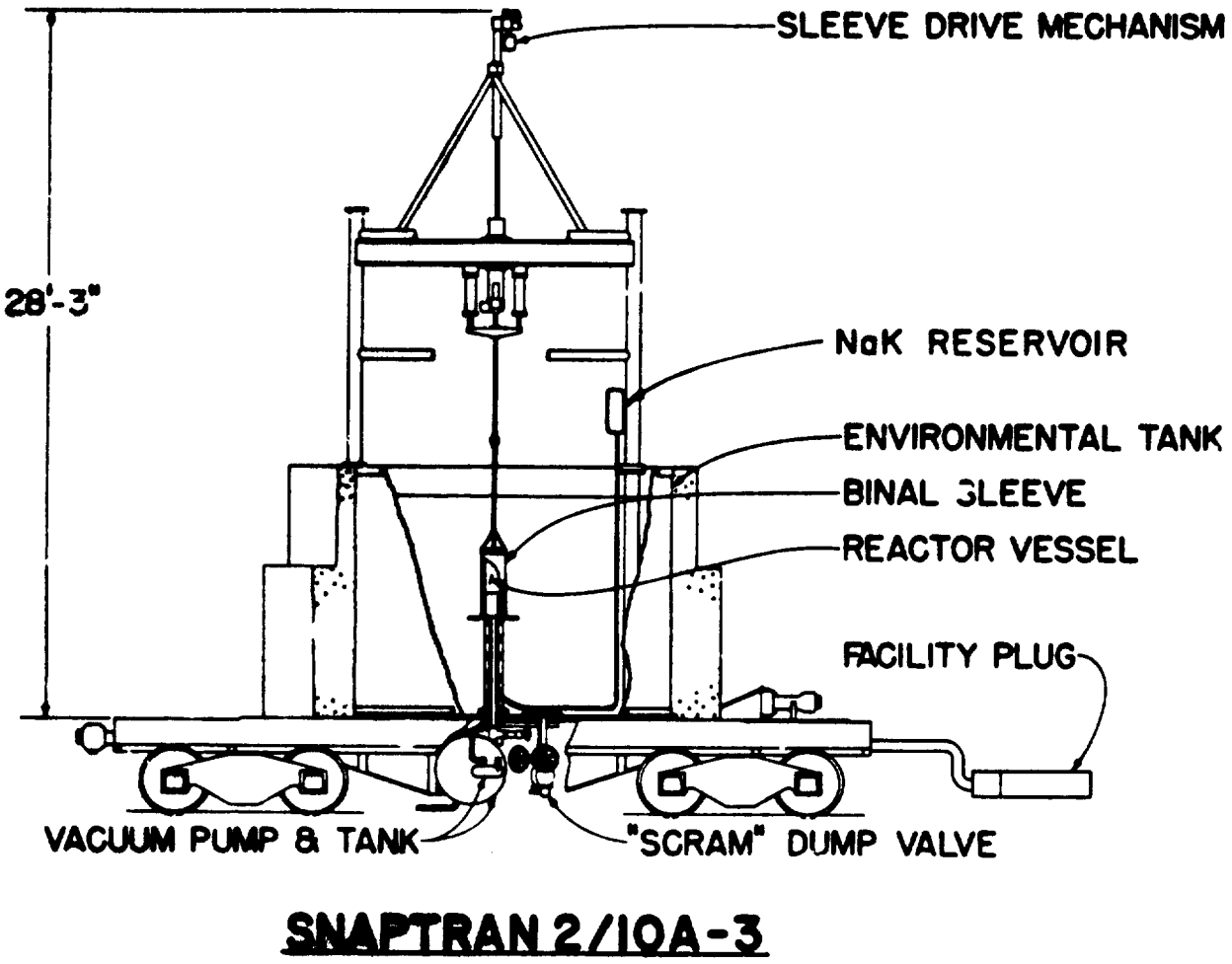

Fig. II-1 SNAPTRAN 2/10A-3 Test Package

1255952

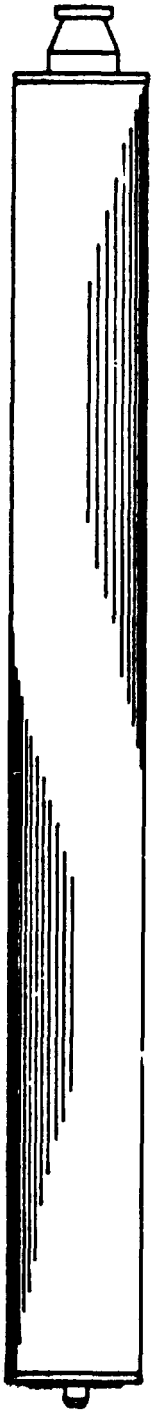

Fig. II-2 **SNAPTRAN** 2/10A-3 Fuel Rod

1255953

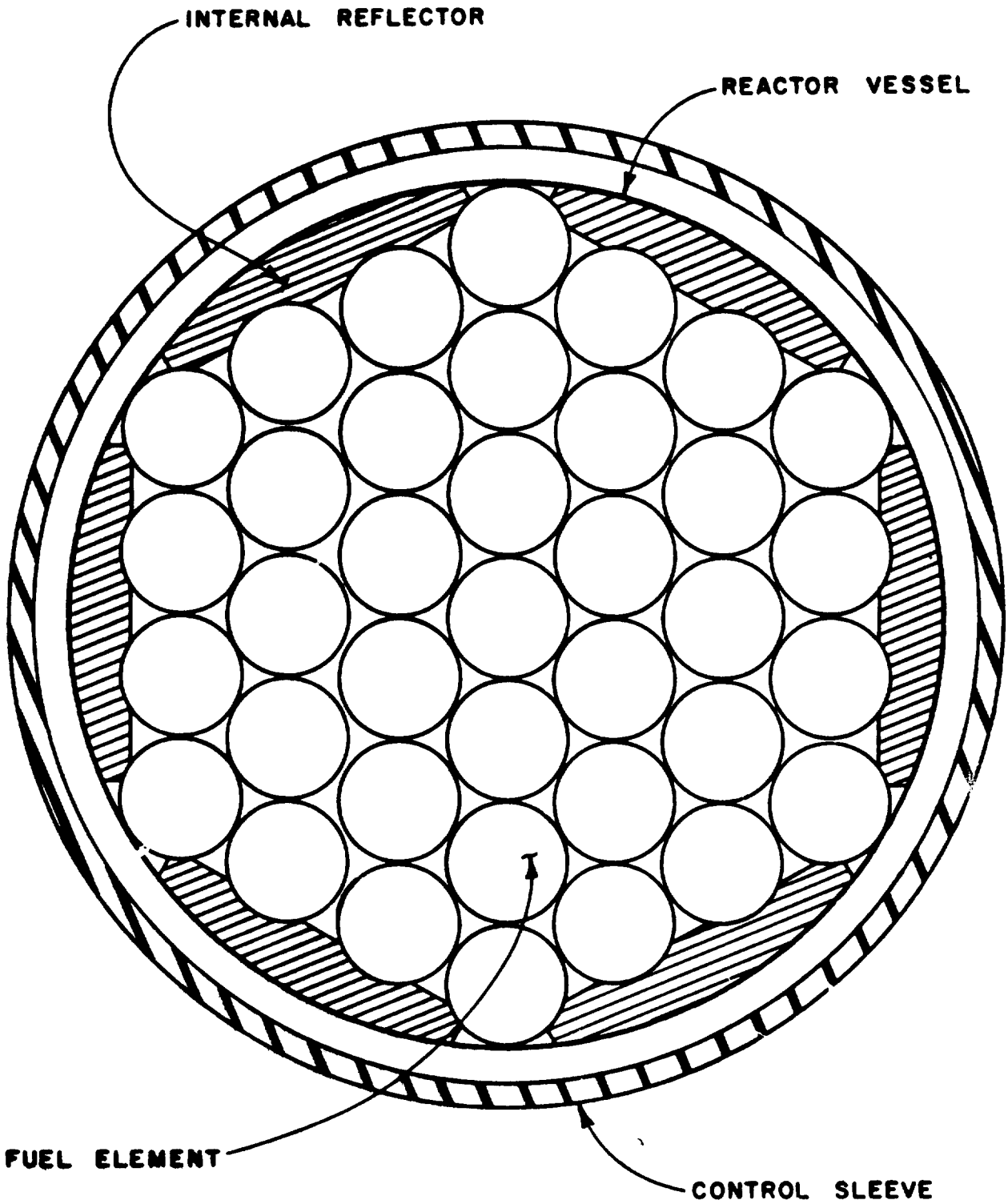

Fig. II-3 SNAPTRAN 2/10A-3 Reactor Cross Section

1255954

B. Nuclear Characteristics Prior to Destructive Test

The excess reactivity of the water-reflected SNAPTRAN 2/10A-3 core is about \$3.6 and the poison sleeve will maintain the water-reflected core at least \$5 subcritical. Critical loading with full water reflection and the poison sleeve removed has been determined by Atomics International to be 32.7 $\pm$ 0.2 fuel elements. A detailed description of the nuclear characteristics of the core prior to the destructive excursion is contained in IDO-16929, "Safety Analysis Report - SNAPTRAN 2/10A-3 Water Immersion Tests"[1].

1255955

III. SAFETY CONSIDERATIONS

A. General

The SNAPTRAN 2/10A-3 destructive test is expected to result in the violent disassembly of the reactor core and dispersal of the fuel over a large area. The possibility of a critical configuration of fuel following the test is therefore considered unlikely. However, prior to any personnel entry into the test area, a survey will be made with neutron and gamma detectors and with remotely controlled television cameras mounted in the reactor area to ascertain that the reactor is shutdown and that no foreseeable event will lead to criticality. Health physics coverage, as described in IDO-16929 "Safety Analysis Report - SNAPTRAN 2/10A-3 Water Immersion Tests" Section V, will also be observed prior to the start of sample recovery and cleanup operations.

These procedures for safely completing the post destructive test clean-up and analytical program are prepared to reduce the chemical, radiological, and criticality hazards associated with these programs. The most probable chemical hazards and the possible core configurations following the destructive test are presented below along with some recomended safety precautions to be taken. Radiation fields which may be encountered are covered in Section VIII of IDO-16929.

B. Fuel Handling Safety

The SNAPTRAN 2/10A-3 reactor has an under moderated, high leakage core and as such is extremely sensitive to the presence of moderating (hydrogenous) materials within the core and the proximity of any materials which act as neutron reflectors, around the outside of the core. Because of this sensitivity to the presence of foreign materials, the following general safety rules should be observed while handling the fuel: (1) exclusion of all water or other hydrogenous material from the area in which an assembly of fuel is located, (2) prevention of any material from being placed around the outer perifery of an assembly of fuel, and (3) storage of the fuel in critically safe containers except during examination at which time only one element should be worked on at a time.

1255956

The critical mass of the flooded and immersed reactor (water in the core and surrounding reactor vessel) is about 3.1 Kg of U^{235} (~24 fuel rods) and for the immersed reactor (water outside the reactor vessel only) about 4.35 Kg of U^{235} (~34 fuel rods). The flooded reactor, in the absence of an external reflector, will not go critical. The fuel recovery containers, Figure V-1, are modeled after the fuel shipping containers designed by Atomics International. Calculations have been made for these shipping containers which indicate that when loaded with five fuel rods each and placed in a slab geometry on 30 in. centers they are in an infinitely safe geometry even when immersed and flooded with water. During cleanup and examination operations, fuel outside the reactor vessel should be kept in the cadmium plated fuel recovery containers which are in two sizes, one of which will hold five intact fuel rods and the other which will hold the equivalent of five fuel rods in the form of small particles. These containers must be kept on a 30 inch center-to-center spacing.

Although the complete disassembly of the reactor and the dispersal of the fuel over a large area is the anticipated consequence of the destructive test, the degree of disassembly may be somewhat less and the safety problems associated with the various core configurations must be considered. The postulated core configurations are as follows:

(1) core essentially intact with the reactor vessel not ruptured,

(2) core essentially intact with the vessel ruptured,

(3) vessel ruptured with part of the core in the reactor vessel and part in the environmental tank, and

(4) violent disassembly of the core with the fuel widely dispersed.

In all four cases the fuel could be fragmented with fuel particle size ranging from the micron region to whole fuel rods.

It is possible that in the case of a minor nuclear excursion, resulting in core configurations 1 or 2 above, some NaK will remain in the reactor vessel and must be removed prior to other disassembly operations. Consequently, equipment should be provided for removing the NaK from the reactor vessel, controlling NaK fires, cleaning residual NaK from the fuel rods, and disposing of the bulk NaK by approved methods.

Based on both nuclear and chemical characteristics, Metal-X dry powder may be used for controlling a NaK fire in the vicinity of the reactor core. However, it should be applied in small quantities and not directly to the reactor core.

In the event that the vessel is left essentially intact after the nuclear excursion, the core disassembly steps must be carefully planned to avoid movement of the fuel when the vessel head is removed. This will necessitate freeing the instrument leads through the vessel head prior to head removal. The fuel rods may be melted together, fragmented, or both and should be removed from the reactor vessel in groups not to exceed five rods at a time and placed in the critically safe post-destruct fuel containers for further handling.

Should the destructive test result in part of the core remaining in the reactor vessel and part in the environmental tank, the fuel rods in the environmental tank should be removed first and placed in the fuel recovery containers. The fuel in the reactor vessel should then be removed using the safety procedures outlined above. Residual NaK in the reactor vessel or on the fuel is not anticipated following a nuclear excursion of this extent. However, the equipment should be provided for controlling NaK fires, cleaning the fuel rods, and disposing of the NaK if any is present.

C. Chemical Hazards

It is anticipated that the NaK coolant will react completely with the environmental tank water and the oxygen in the air during the destructive test to form widely dispersed dilute hydroxides, however, the possibility of small quantities of NaK remaining in the reactor vessel or elsewhere should not be overlooked. Another hazard which may exist is the presence of potassium superoxide (KO_2) on or near any residual NaK. This compound is formed by the oxygen in the air at atmospheric pressure and temperature reacting with the potassium in the NaK. If hydrocarbons are used in the cleanup operations and come in contact with the potassium superoxide a violent explosion may result. Little is known of the conditions required to bring this about but in several past instances

1255958

where explosions have occurred in NaK systems the possible presence of both potassium super oxide and hydrocarbons have existed.

The presence of beryllium must be considered during the post-test examination and area cleanup. If the force of the nuclear excursion is sufficient, the beryllium filler pieces in the core may be fragmented into micron or submicron size particles increasing the possibility of inhalation.

1255959

IV. SAMPLE RECOVERY AND MONITOR RETRIEVAL

A. Priority Monitors and Samples

Since the identification of a many short-lived isotopes as possible is of primary importance in the analytical program several radiation monitors and samples have been given a high priority for recovery from the test area immediately following the destructive excursion. These are listed in Table IV-A under the heading "Priority Monitors and Samples" and include fission foils, activation foils, and other neutron dose measurement devices as well as air samplers, fallout plates, and film badges. The location of samples and monitors on the sampling grid in the test cell area is shown in Figure IV-1.

The anticipated high radiation field in the test area following the destructive test will preclude the use of personnel in the priority recovery operation. Table IV-C indicates the dose rates expected at various times and distances following the test. The table is based on the conservative assumption that all the fission products released are retained on the test pad and form a line source just inside the building. The calculations further assume the source to have no self-shielding or external shielding except air. On the basis of these figures the recovery of the high priority samples must be carried out by remote techniques. The three methods to be used are: (1) the Mobot (previously described), (2) a clothesline, and (3) a pickup arm on the Egerton, Germeshausen, and Grier, Inc. (EG&G) dolly shown in Figure IV-1. The recovery methods are indicated in Table IV-A.

The monitors and samples recovered by the Mobot will be placed on a special pallet carried on the fork lift. The pallet will be transferred to the shielded locomotive at the south end of the test cell for transport to the Examination Area. The clothesline technique will consist of a nylon rope on pulleys running from the superstructure above the environmental tank to the pedestrian access door at the east end of the IET Control and Equipment Building. The monitor removal will be done manually by personnel at the access door. The pickup arm on the EG&G dolly is

1255960

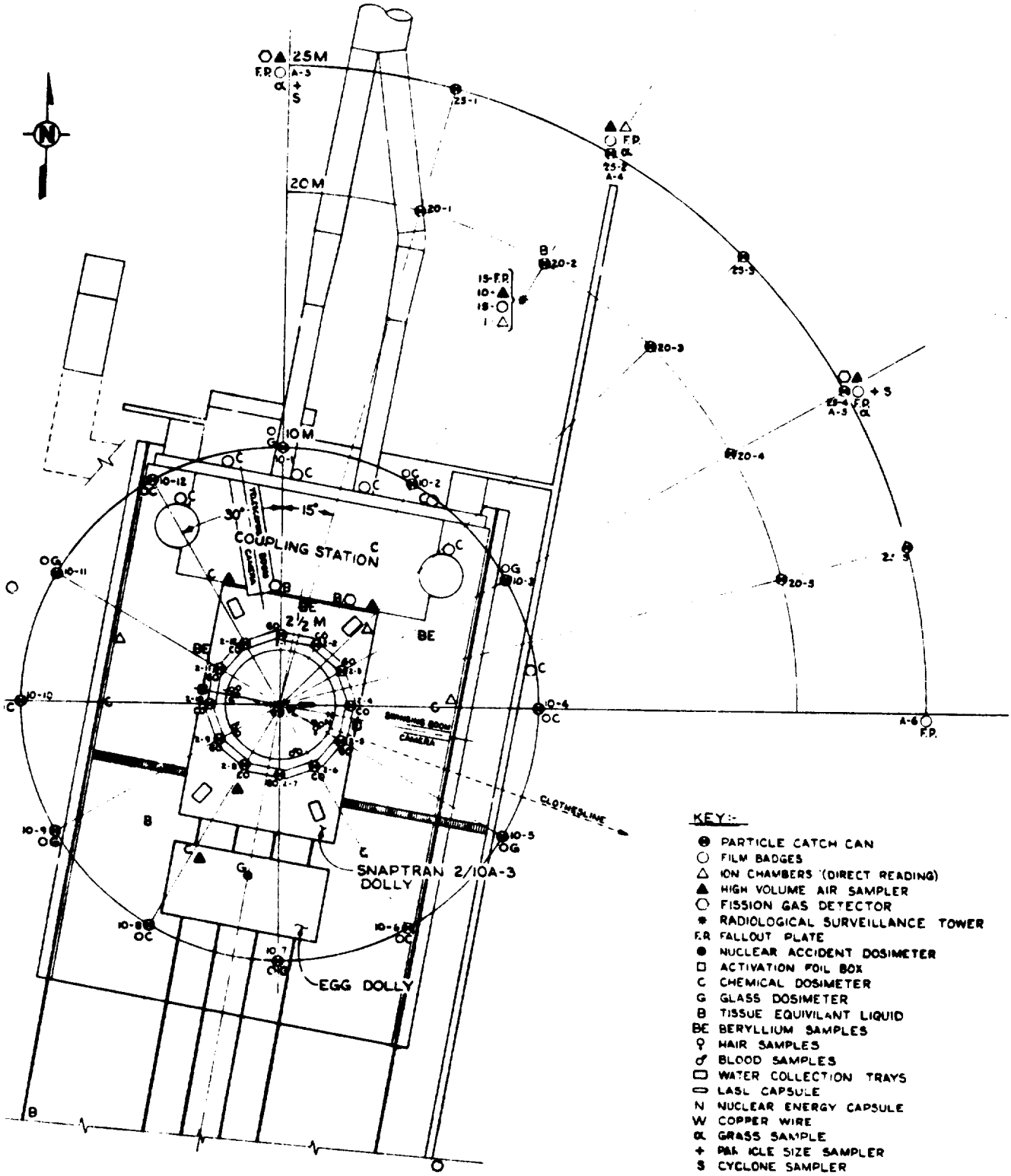

Fig. IV-1 Sampling Grid Test Cell Area

1255961

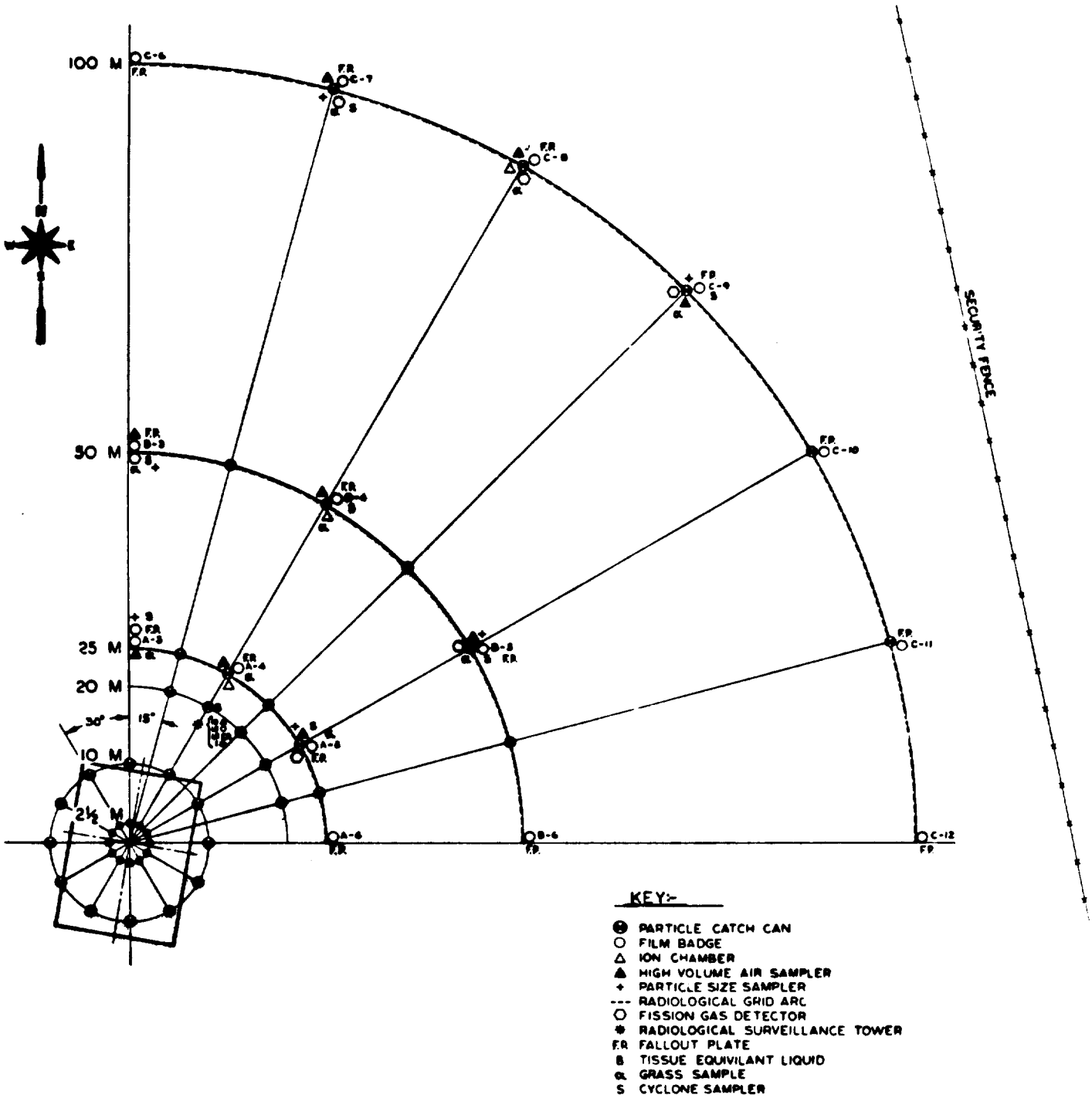

Fig. IV-2 Sampling Grid to 100 Meters

1255962

designed to automatically engage the pickup loops on the monitors located along the H-rail track when it is moved out of the IET area by winch immediately following the destructive test. Should any difficulties be encountered in either the clothesline recovery method or the pickup arm, the Mobot will be available for assistance.

In conjunction with the retrieval of the high priority items, a brief radiation survey of the test cell area will be made by the Mobot. This will be a preliminary survey to supplement the initial radiation readings of the fixed location detectors in the test cell. A complete systematic survey will be made by the Mobot immediately following the priority recovery to pinpoint radiation hot spots for the initial evaluation of reentry and cleanup procedures. The results of the survey will be mapped in the IET control room as it is being made.

B. Other Monitors and Samples

The analysis of the remaining monitors and samples do not involve short-lived isotopes and consequently the samples may not be recovered until 24 hours after the destructive test. These samples are listed in Table IV-B and the locations are shown in Figures IV-1 and IV-2.

Recovery of the particle cans and Los Almos Scientific Laboratory capsule will be made by STEP personnel under the surveillance of a TAN Health Physicist. The four water collection trays will be removed from the reactor dolly after it arrives at the TSF area. All other samples and monitors will be recovered by the reentry teams.

1255963

TABLE IV-A

SAMPLES AND MONITORS TO 100 METER ARC

PRIORITY MONITORS AND SAMPLES (RECOVERY T + 1 HOUR)

Sample or Monitor	Quant.	Location	Recovery Method
Nuclear Accident Dosimeter	1	On EG&G dolly	Remove with dolly
Nuclear Accident Dosimeter	2	Above reactor	Clothesline
Nuclear Accident Dosimeter	3	Along track at 25, 50, 100 meters	Pickup arm - EG&G dolly
Hi-Vol Air Sampler	10	Radiological tower	Mobot
Hi-Vol Air Sampler	3	One each on 25, 50, 100 meter arcs	Mobot
Hi-Vol Air Sampler	1	EG&G dolly	Remove with dolly
Fallout Plate	15	Radiological tower	Mobot
Fallout Plate	3	One each on 25, 50, 100 meter arcs	Mobot
Activation Foil Box	2	Above reactor	Mobot
Nuclear Energy Capsule	2	In environment tank	Mobot
Nuclear Energy Capsule	1	Bottom flight tube	Remove with EG&G dolly by rope or Mobot
Hair Samples	2	Above reactor	Clothesline with NAD's
Glass Dosimeters	1	Above reactor	Clothesline with NAD's
Glass Dosimeters	1	On EG&G dolly	Remove with dolly
Blood Sample	2	Above reactor	Mobot
Copper Wire	1	On clothesline	Clothesline

1255964

TABLE IV-A (Cont.)

SAMPLES AND MONITORS TO 100 METER ARC

PRIORITY MONITORS AND SAMPLES (RECOVERY T + 1 HOUR)

Sample or Monitor	Quant.	Location	Recovery Method
Particle Cans	4	2 at 2-1/2 meters, one at 20 & 25 meters	Mobot
Water Sample	1	Environmental tank	Mobot
Fission Gas Detectors	3	One each from 25, 50, 100 meters	Mobot
Film Badges	2	Above reactor	Remove with 2 NAD's - clothesline
Film Badges	2	Above reactor	Remove with 2 blood samples - Mobot
Chemical Dosimeters	1	On EG&G dolly	Remove with dolly
Film Badges	15	Radiological tower	Mobot
Particle Size Samplers	3	One each on 25, 50, 100 meter arcs	Mobot
Cyclone Samplers	3	One each on 25, 50, 100 meter arcs	Mobot

The following priority samples and monitors contain fissionable materials in the concentrations indicated. Since they will be recovered and examined completely independent of the fuel recovery and examination they will not constitute a criticality hazard.

Nuclear Accident Dosimeters (per NAD)	Pu^{239}	1 gm
	Np^{237}	0.1 gm
	U^{238}	5 gms

1255965

Nuclear Energy Capsules (4" long)	(per pair)	U^{235}	0.04 gms
Nuclear Energy Capsules (3" long)	(per pair)	U^{235}	0.03 gms
Nuclear Energy Capsules (2" long)	(per pair)	U^{235}	0.02 gms

1255966

125961

TABLE IV-B

OTHER MONITORS AND SAMPLES (RECOVERY T + 24 HOURS)

	Environ. Tank	Reactor Dolly	In test Cell, Others	10 Meter Arc	Between 10 & 20 Meter Arcs	20 Meter Arc	25 Meter Arc	50 Meter Arc	100 Meter Arc
Particle Cans	10			12		4	4	5	5
Glass Dosimeters	8			6					
Chemical Dosimeters	6		11	7					
LASL Capsule	1								
Hi-Vol Air Sampler	1		2				3	3	2
Water Trays		4							
Film Badges	10		14	12	4		12	12	24
Fission Gas Detectors			2				1	1	2
Tissue Equiv. Liquid			3		1	1			
Fallout Plates							11	11	23
Particle Size Samplers							1	1	2
Cyclone Samplers							1	2	1
Grass Samples							3		

The LASL capsule is the only sample in this group containing any fissionable material. Its total content is less than 0.5 gms U^{23}.

1256968

TABLE IV-C

THEORETICAL GAMMA DOSE RATES

Distance Meters	Time After Destructive Test						
	1/4 Hr	1/2 Hr	1 Hr	2 Hr	3 Hr	4 Hr	8 Hr
3	4,000 R/Hr	2,200 R/Hr	1000 R/Hr	400 R/Hr	210 R/Hr	150 R/Hr	60 R/Hr
10	400	220	100	40	21	15	6
30	40	22	10	4	2.1	1.5	0.6
50	16	8.8	4	2	0.8	600 mr/hr	240 mr/hr
100	3.2	1.8	0.8	0.3	168 mr/hr	120	48
200	600 mr/hr	330 mr/hr	150 mr/hr	60 mr/hr	32	23	9
500	24	13	6	2	1.3		

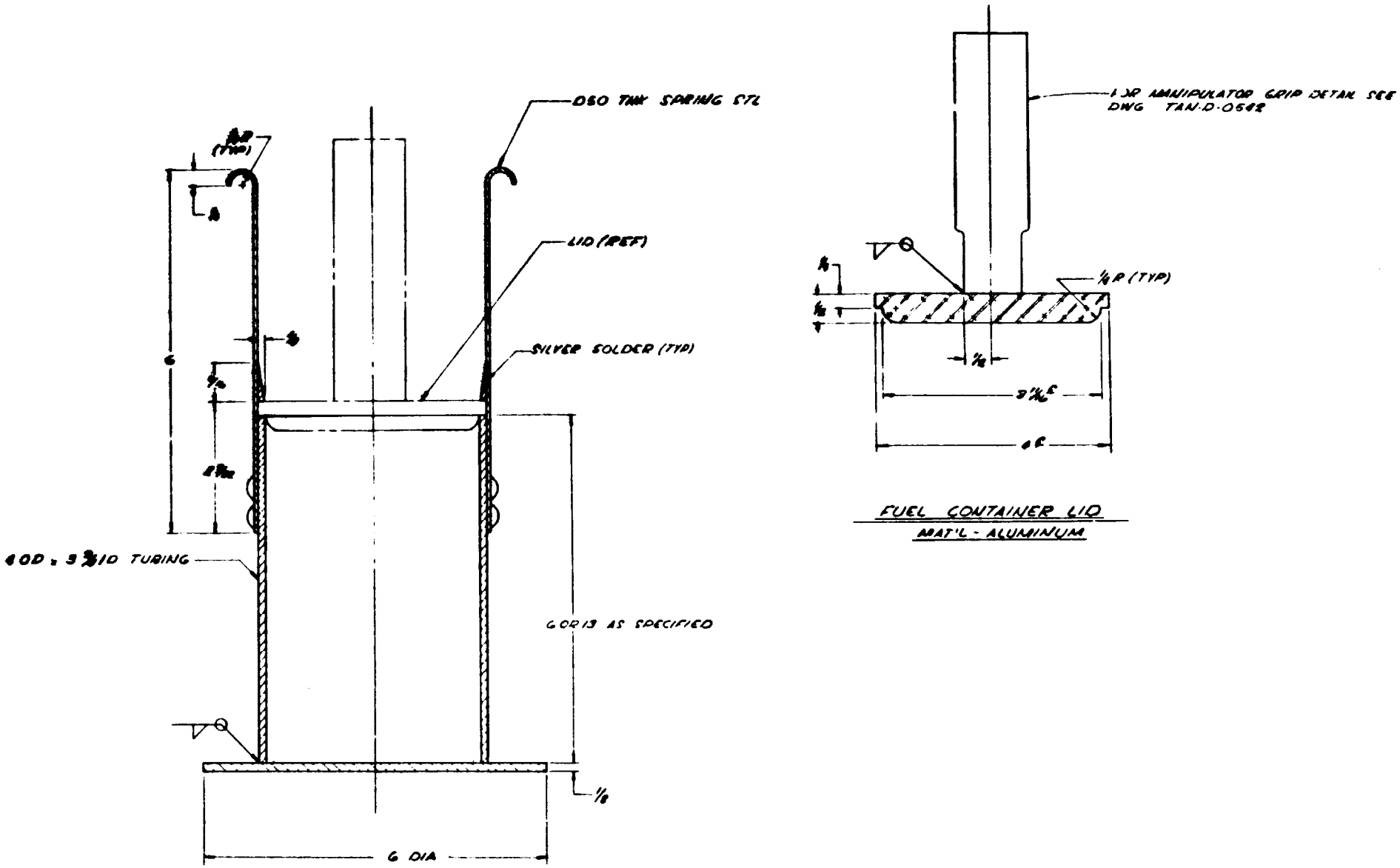

Fig. V-1 Post-Destruct Fuel Container

1259969

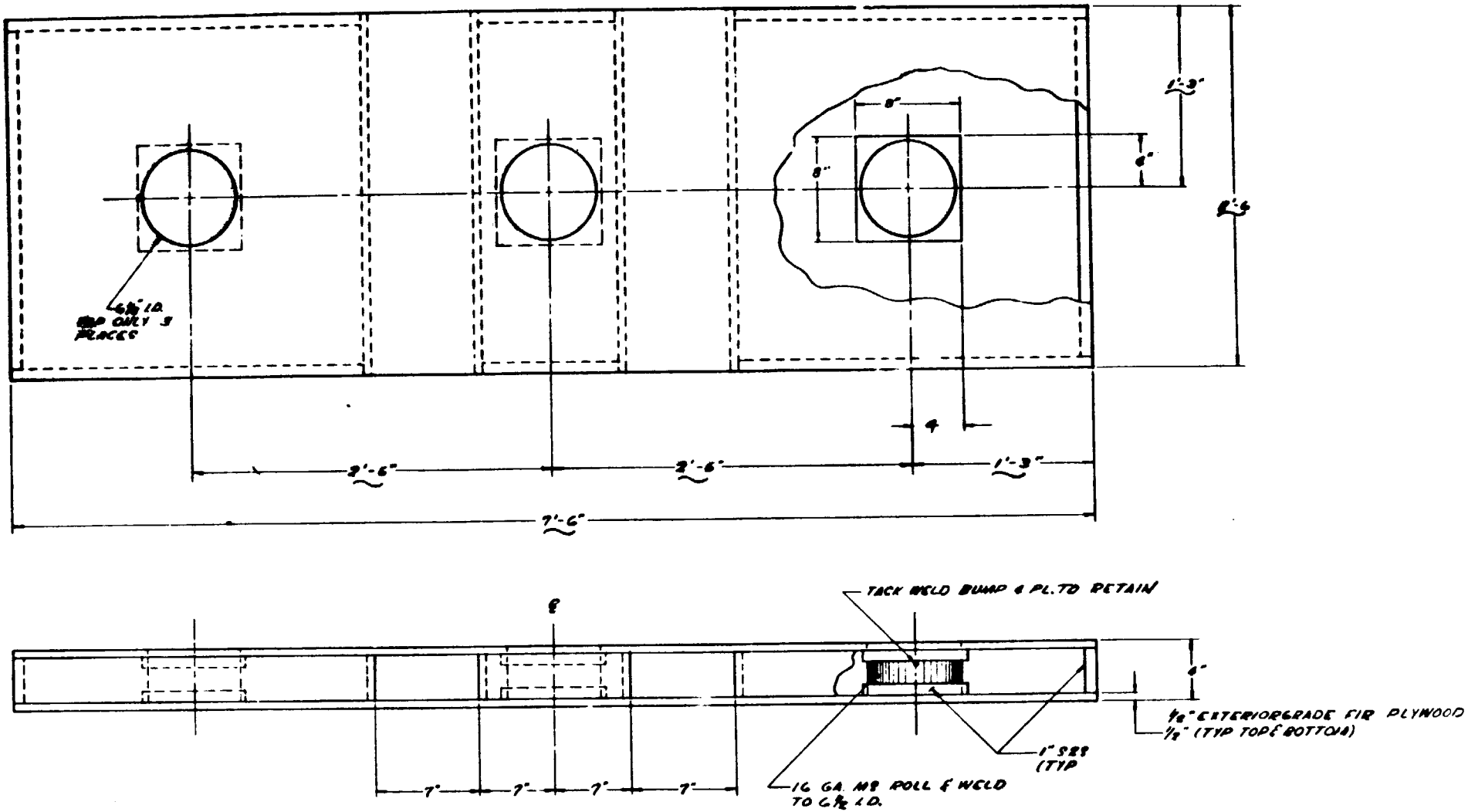

Fig. V-2 Post-Destruct Fuel Container Holder

1253910

V. REACTOR COMPONENT RECOVERY AND AREA CLEANUP

A. Fuel Recovery

Photographs of the test area taken prior to and immediately following the destructive test will be available to aid in the recovery and cleanup operation. The Mobot will be used to recover reactor fuel scattered around the test area. Fuel recovery in the test cell will be made concurrent with the detailed radiation survey and immediately following removal of the priority monitors and samples. Fuel outside the test cell will be recovered as soon as possible after the test, probably within 24 hours. The intact fuel and fuel fragments will be located by use of the TV cameras and the radiation detection meter mounted on the Mobot. The exact location and description of each fuel element or fragment will be recorded in the IET control room in accordance with the grids shown in Figure IV-1 and IV-2. Each piece will also be photographed through the TV system to assist in later identification during examination.

As each fuel piece is located it will be placed in a critically safe container. Two sizes of containers will be provided, both of which are 3-3/4 inch inside diameter and plated with cadmium on the outside surfaces. A container with its snap-on cover is shown in Figure V-1. The two container sizes are 6 inches and 13 inches high respectively. The 13 inch high containers will hold a maximum of 5 intact fuel rods and the 6 inch high units will hold a volume in dust and small fragments equivalent to 5 fuel elements. Each fuel container will be covered as soon as it is filled to prevent possible entry of water or spread of contamination during transportation. The fuel containers will be carried on the Mobot fork lift in a fuel container holder shown in Figure V-2. The fuel container holders are designed to provide a 30 inch center to center spacing between fuel containers. As soon as the fuel containers are filled the holders will be placed on a two track flat car for transport to the TSF area.

1255971

A distance of 500 ft on each side of the four rail track will be an exclusion area while the reactor and fuel are being transported to the examination area and will remain such until it has been surveyed and decontaminated. The transfer of the reactor and fuel will not be made during adverse weather.

B. Area Cleanup

It is anticipated that the recovery and removal of the intact and identifiable fuel fragments from the test cell area will sufficiently reduce the radiation background to allow personnel entry to start the test cell cleanup. Test cell cleanup will also be preceded by the removal to the examination area of the four rail test dolly including any fuel remaining in the environmental tank. All cleanup operations inside the IET security fence will be under the constant surveillance of Health Physics personnel.

The dry cleanup of the test cell will consist of vacuuming all particulate material and placing it in the 6 inch high post-test fuel containers previously described. The containers will be shielded with lead bricks as required and placed on a two track flat car for transport to the Examination Area.

The wet cleanup of the test cell will be accomplished by washing any remaining fine particulate into the hot drain system. Possible criticality in the drain system during this operation has been discussed in the "Safety Analysis Report - SNAPTRAN 2/10A-3 Water Immersion Tests"(1), and will be prevented by the cadmium lining of the drain trench and pipe and plating of the particulate filter basket. Smear samples will be taken on all surfaces in the test cell to determine when decontamination has been completed.

Recovery of the particulate filter basket located in the hot drain system will necessitate the removal by crane of the 7-1/2 ton concrete cover. When the cover has been removed, the filter basket will be wrapped in plastic to prevent the spread of contamination and placed on a two track flat car for transport to the Examination Area.

1255912

The area surrounding the test cell but inside the IET security fence will be completely surveyed for radioactive and beryllium contamination. Contaminated soil and the sheet plastic previously placed over the flat roofed buildings for contamination protection will be removed for disposal at the burial ground. Any fuel or fragments that landed on the plastic sheets will be recovered and placed in the previously described post-test fuel containers for transport to the TSF area.

The area outside the IET security fence will also be surveyed for radioactive and beryllium contamination. Contaminated areas will be fenced and marked with appropriate signs giving the type and levels of contamination. High concentrations of beryllium contamination will require soil removal or coverage with fresh soil.

1255973

VI. ANALYTICAL EXAMINATION

A. General

Detailed examinations of the fuel and reactor components will be performed by the TAN Metallurgy and Hot Cell Branch and the CPP Analytical Branch. The Hot Cell Branch will weigh and dimensionally check each fuel piece upon arrival at the TSF and examine each for marks, scratches, melted areas, and zirconium hydride fractures. Each identifiable piece will be sectioned for both hydrogen and fission product analysis. Further details of the metallurgical examinations are covered in the following parts of this section.

The CPP Analytical Branch will analyze the sectioned fuel for hydrogen and fission products and analyze the water from the environmental tank for fission products, beryllium, zirconium, and particle size and distribution. Details of the chemical examinations are also described in the following paragraphs of this section. A detailed listing of the examinations anticipated for both branches is presented in the Appendix.

B. Component Distribution and Visual Inspection

The distribution of large pieces of the reactor core and structural members in the vicinity of the reactor will provide information on the blast force as well as the extent of contamination of the immediate area. Later evaluation of the results of the examination will be greatly aided by the visual inspection and identification of these pieces when they are first located. Aerial photographs of the area will be taken immediately before and after the test to aid in component distribution studies.

To assure accurate location of the pieces with respect to the original reactor package a grid will be laid out to the 50 meter radius as shown in Figure IV-2. The grid lines are spray painted on the ground to reduce disturbance by the Mobot and weather.

1255974

As soon as feasible following the destructive test the Mobot will be sent into the test area to locate the parts of the reactor core and structural members. The distribution of any reactor fuel in the water tank is of prime importance from the criticallity standpoint and will be determined first by either the boom mounted TV cameras in the test cell or by use of the Mobot if the boom mounted cameras are inoperative. Reactor fuel and structural members that are distributed outside the environmental tank will be located by a systematic search of each grid section. These pieces will be examined by the Mobot TV cameras and photographed for identification purposes. They will then be placed in numbered critically safe containers and transferred to the flatcar by the Mobot. The exact location of each piece on the grid and in the environmental tank will be noted on a master grid plan at the Mobot control console.

When the flatcar containing the reactor pieces arrives at the TAN hot shop, the pieces will be weighed and dimensionally checked. The weights will serve two functions: the calculation of the approximate blast force and determining the uranium inventory (Section VI-C) of the core material. As each piece is weighed the following pertinent information will also be recorded: core material or structural (specific identification if possible), unusual marks or scratches, extent and location of apparent melted areas, and fractured zirconium hydride. All phases of the hot shop and laboratory examination and testing will be documented photographically.

C. Uranium Inventory

An inventory of the recovered fuel will require the determination of the uranium content of any intact fuel rods, fuel rod fragments, and fine material. Intact fuel rods and some fuel rod fragments will still have inactive material (i.e. cladding and end caps) attached which must be subtracted from the total weights. A list of the weights of the inactive material for each fuel rod will be available for this calculation. In addition, the total ZrH_x-U, total U, and total U^{235} for the core and ZrH_x-U for each fuel rod will be provided.

1255975

It is possible that ruptured fuel rods will have lost some weight by hydrogen diffusion prior to the recovery. Determination of the hydrogen content remaining is covered in Section E. The weight of the intact fuel rods and fuel rod fragments will be calculated on the basis of zero percent burnup and fission gas loss. Fine material will also have an assumed burnup of zero percent. Although it is presumed that this fine material will come from the center of the core, burnup and consequent fission gas loss will probably not be measurable.

D. Beryllium Fragmentation

Although extensive fragmentation of the unclad beryllium reflector pieces is not anticipated, the health hazards associated with the metal and its oxide require that the degree of shattering be determined. All identifiable reflector pieces will be collected and assembled to determine from the original dimensions the percentage missing. It has been estimated that 1% may be broken into grain-size pieces (approximately 35 microns). Should this occur, some of these particles will be found in the particle cans described in Section VI-G, "Determination of Hydrid Fracture". Further information will also be gathered from the Cascade Impactors and filter analysis described in "Proposed Site Monitoring Program, SNAPTRAN Destructive Test, Section B-1-q, Measurement of Beryllium Release, "[2]. Summation of the information from these sources will determine the degree of shattering of the beryllium.

E. Hydrogen Analysis

All identifiable fuel and fuel fragments will be analyzed for hydrogen content and hydrogen distribution by the CPP Spectroscopy Section. Removal of the cladding and sectioning of the fuel will be performed by the TAN Metallurgy and Hot Cell Branch prior to sending the samples to the Spectroscopy Section. Any fuel with intact cladding will be analyzed for the total free hydrogen around the fuel by the Hot Cell Branch prior to sectioning.

The total remaining hydrogen in all the recovered fuel fragments will provide an estimate of the total hydrogen released during the destructive excursion but will not provide the contribution of the hydrogen-air reaction to the total force of the excursion. The hydrogen-air mixture

1255976

must fall in the range of 19-57 volume percent to produce a detonation. Above and below these limits it is flammable. Since there is no provision for measuring the concentrations of the hydrogen-air mixtures during the destructive test, only a very rough estimate of the resulting explosive contribution will be possible.

F. Fission Product Inventory

All identifiable fuel pieces will be analyzed quantitatively for the remaining fission products and U^{235} by the CPP Special Analysis Group from sections cut for the hydrogen analysis. The total of these fission products, combined with the fission product analyses from the fallout plates, the high volume air samplers, the environmental tank water and the particle cans (water and filter papers) will give a reasonable check against the total theoretical fission products produced by the excursion. The fission products to be determined quantitalively in the fuel pieces are I^{131}, $Ba\text{-}La^{140}$, $Zr\text{-}Nb^{95}$, Ce^{141}, Ru^{103}, $Sr^{89\text{-}90}$.

G. Determination of the Hydride Fracture and Reactions

It is conceivable that the sudden pressure buildup of the internal hydrogen in the zirconium-hydride fuel during the destructive test will cause fracturing and a reduction of the hydride to approximately grain size (10-50 micron). Should this occur, the internal pressure could far exceed the strength of the fuel cladding which would result in the release of the particles to the surrounding water.

A sampling grid will be provided for collecting water-particle samples. The grid is shown in Figure IV-1 (the immediate area of the test cell) and Figure IV-2 (the overall grid and its relation to the IET Site Monitoring Grid). The location of the 44 particle cans are designated on these two figures and the details of a particle can shown in Figure VI-1. The 12 cans located on the 2-1/2 meter arc are attached to the top edge of the environmental tank and may be removed by the Mobot.

The total volume of water in each can will be determined and the entrained particles will be collected on the particle can filter papers. Microscopic examination of the filter papers will be made by the CPP Spectroscopy Section to determine the zirconium and beryllium particle

1255977

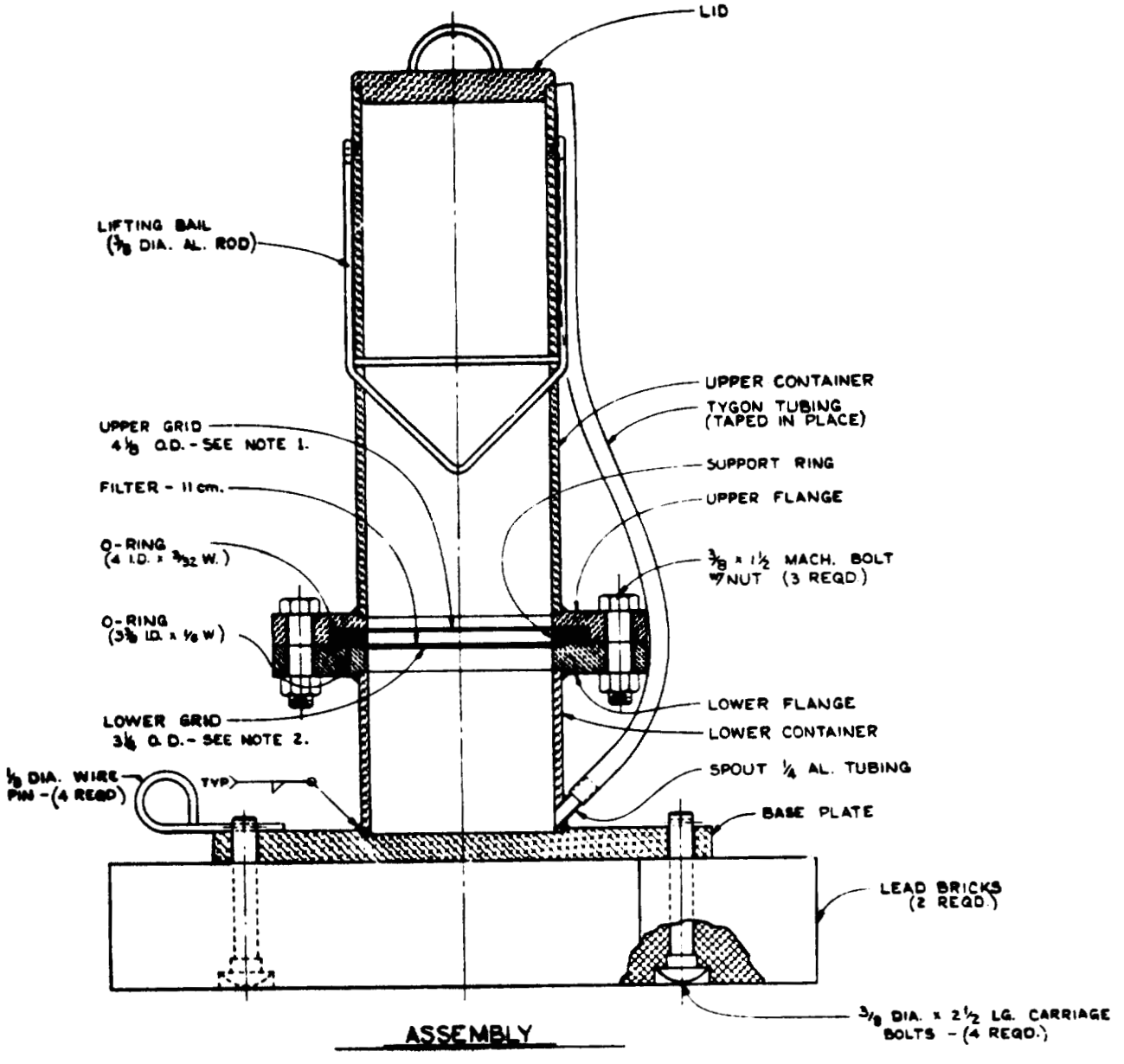

Fig. VI-1 Particle Catch Can

J255978

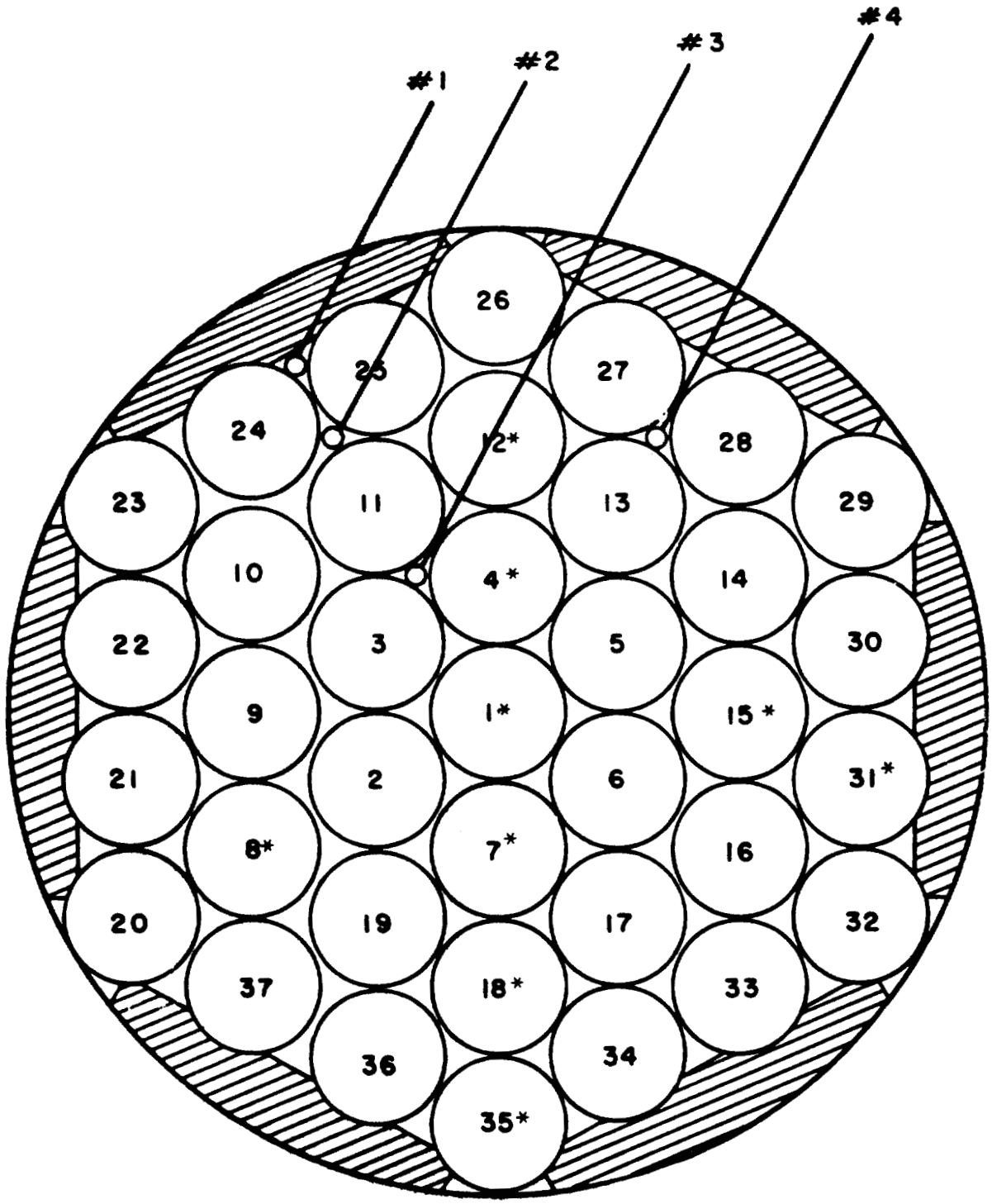

Fig. VI-2 In-Core Flux Wire Locations

1255979

sizes and distribution. If the zirconium particles are larger than grain size (10-50 micron) the state of the zirconium will be determined. A representative one inch diameter circle from ten of the filters will be scanned for particle distribution. A one inch diameter disc will also be punched out of each filter paper by the CPP Spectroscopy Section for beryllium and zirconium analysis. Iodine in the water will be determined by the CPP Special Analysis Group in terms of total iodine, free iodine, iodide plus free iodine, and iodine with a valence greater than zero. A sample of water from each particle can will also be analyzed for beryllium by the Spectroscopy Section. The remainder of the filters and the remaining water from each can will be analyzed by the CPP Special Analysis Group for total radioactive strontium.

Examination of each identifiable fuel piece for the extent of melting will indicate the initial particle temperature. Each piece will also be examined for internal cracks and voids by the TAN Metallurgy and Hot Cell Branch and also for grain size of the hydride as a function of location. The photomicrograph examinations for grain size will also indicate the extent of fragmentation. These studies are covered in Section VI-H "Physical Property Changes."

H. Physical Property Changes

It is anticipated that the destructive test will produce changes in the physical properties of the reactor fuel and the structural materials by heating or cold working. The TAN Metallurgy and Hot Cell Branch will investigate these changes by tensile strength, hardness, and other tests to determine, if possible, the temperature gradient across the core, phase changes, changes in grain size in the zirconium hydride, indications of fragmentation of the zirconium hydride by internal hydrogen pressure, and sintering, voids, and melted areas or zones caused by high temperature. The identifiable fuel pieces, cladding, upper and lower grid plates, and the reactor vessel will be included in this study. In addition to the tests mentioned above, photomicrographs will be used to study grain size, sintering, etc. supplemented by x-ray diffraction and electron microscope examinations.

1255980

I. In-Core Flux Wires and Activation Analyses

Flux wires will be located at four positions in the reactor core as shown on Figure VI-2. The wires will be sealed within a 3/16 in. OD aluminum tube and will have the following wire distribution and tube lengths.

1.	One each Au-Cu, Co-Al, U-Al alloys	14-1/4 inches
2.	One each Au-Cu, CO-Al, U-Al alloys	15 inches
3.	One each Au-Cu, Co-Al, U-Al alloys	15-1/4 inches
4.	One cadmium covered Al-Cu alloy	15 inches

Each wire and aluminum tube in the core will be adequately marked to identify its position prior to the destructive test. Following recovery, the tubes and wires will be cleaned of any residual NaK and counted by the MTR Radiation Measurements Section.

Activation analyses will also be made by the CPP Analytical Branch on the fuel cladding of identifiable fuel pieces.

1255981

VII. CONCLUSION

Provisions have been made to safely recover all types of samples resulting from the destructive excursion. The Mobot will be used extensively for reactor fuel recovery outside the environmental tank and for priority sample recovery in the test cell area. All other samples will be recovered by personnel under health physics surveillance.

It is anticipated that recovery of the reactor fuel by the Mobot will reduce the radiation background sufficiently to allow radioactive and beryllium contamination surveys of the test area to be made and area cleanup to proceed. Area cleanup will consist of collection of the coarse particulate from the test pad in critically safe containers followed by a water washdown of the pad and soil removal from contaminated areas inside and outside the IET security fence.

The metallurgical and chemical examinations of the reactor fuel, fuel fragments, environmental tank water, reactor vessel, and grid plates following the destructive test will provide information on changes in fuel composition and structure, the extent of melting in the core, the isotopic and hydrogen distribution in the fuel, and metal-water reactions.

Critically safe containers are provided for use in the recovery of reactor fuel, fuel fragments, and coarse particulate. Methods have also been outlined for safe handling of the core in the event the nuclear excursion is of very minor consequence and fails to result in complete core disassembly.

1255982

VIII. APPENDIX

METALLURGY AND HOT CELLS BRANCH EXAMINATIONS

I. Fuel Examination

A. All Fuel

1. Dimensional checks where appropriate
2. Gross weight and percent cladding and end caps remaining for uranium inventory.

B. Intact Fuel

1. Determine total free hydrogen in each fuel element at room temperature.
2. Section fuel (5-1/8" thick sections cut with diamond wheel)
   a. Five sections for CPP Analytical Branch examinations
   b. Remainder for fuel matrix examination for
      (1) Temperature gradients
      (2) Phase changes
      (3) Grain size changes
      (4) Fragmentation by internal hydrogen pressure
      (5) Sintering, voids, melted zones
3. Cladding - determine hardness for indication of phase changes.

C. Identifiable Fuel Fragments

1. Section fuel (1/8" thick sections, cut with diamond wheel same distribution as B2).
   a. 1/8" thick sections for CPP Analytical Branch examinations
   b. Remainder for fuel matrix examination for
      (1) Temperature gradients
      (2) Phase changes

1255983

(3) Grain size changes

(4) Fragmentation by internal hydrogen pressure

(5) Sintering, voids, melted zones

2. Cladding - determine hardness to indicate phase changes.

D. Unidentifiable Fuel Fragments, Chips, and Dust

1. Gross weight.

2. Tyler screen sizing (Nos. 4, 16, 100, 200) and wt% of each.

3. Chemical composition analysis for uranium and zirconium for uranium inventory.

II. Structural Material Examination

A. Reactor Vessel

1. Determine changes in tensile strength and hardness for indications of cold work.

B. Upper and Lower Grid Plates

1. Determine hardness for indication of phase changes.

1255984

CPP ANALYTICAL BRANCH EXAMINATIONS

Sample	Max. Samples	Analysis	Results Reported As
Particle Can Water	44	Total iodine, free iodine, iodide plus free iodine, iodine with valence > 0	uc/ml
Particle Can Water	44	Total Sr	uc/ml
Particle Can Water	44	I^{131}, Ba-La^{140}, Zr-Nb^{95}, Ce^{141}, Ru^{103} Sr^{89-90}	uc/ml uc/ml
Reactor Tank Water	2	I^{131}, Ba-La^{140}, Zr-Nb^{95}, Ce^{141}, Ru^{103} Sr^{89-90}	uc/ml
Particle Can Filters	44	Total Sr	uc/sample
Particle Can Filters	44	I^{131}, Ba-La^{140}, Zr-Nb^{95}, Ce^{141}, Ru^{103} Sr^{89-90}	uc/filter
Fuel (3 sections/element)	111	I^{131}, Ba-La^{140}, Zr-Nb^{95}, Ce^{141}, Ru^{103} Sr^{89-90}	uc/gm of fuel
Particle Can Filters	44	Zr and Be particle size and distribution	Max. & min. diameter for 1" diam. of each filter
Particle Can Filters	10	Particle size distribution	No. of particles in each 10 micron diam. increment for 1" diam.
Particle Can Filters	44	Zr and Be	ugm/1" diam. each filter
Particle Can Water	44	Be	ugm/ml
Fuel (5 sections/element 5 drillings/section)	450	H_2	ugm/gm of fuel
Fuel (fragments, chips, and dust)(screened)	32	U and Zr	wt% U and Zr

1255985

IV. REFERENCES

1. F. L. Bentzen and J. M. Waage, Ed., "Safety Analysis Report - SNAPTRAN 2/10A-3 Water Immersion Tests", IDO-16929, October 1963.

2. R. R. Landolt, Private communication (February 13, 1963).

1255986

DATE FILMED

5 / 7 / 65

LEGAL NOTICE

This report was prepared as an account of Government sponsored work. Neither the United States, nor the Commission, nor any person acting on behalf of the Commission:

A. Makes any warranty or representation, expressed or implied, with respect to the accuracy, completeness, or usefulness of the information contained in this report, or that the use of any information, apparatus, method, or process disclosed in this report may not infringe privately owned rights; or

B. Assumes any liabilities with respect to the use of, or for damages resulting from the use of any information, apparatus, method, or process disclosed in this report.

As used in the above, "person acting on behalf of the Commission" includes any employee or contractor of the Commission, or employee of such contractor, to the extent that such employee or contractor of the Commission, or employee of such contractor prepares, disseminates, or provides access to, any information pursuant to his employment or contract with the Commission, or his employment with such contractor.

1255987

FND