Archives and Records Office
Records Series Title DR. CORNELIUS TOBIAS'S PAPERS
Accession No. 434-89-0108
File Code No. 10-08-065
Carton No. 22/88
Folder No. 50 - MARKLE FOUNDATION
Notes
Found By C. HALL
Dates
COPY

724870

BEST COPY AVAILABLE

PHYSICS

CORNELIUS A. TOBIAS

Semi Annual Report from the

Division of Medical Physics

University of California, Berkeley, California

to the

John and Mary Markle Foundation

New York City

For the period January 1, 1947 - June 30, 1947

Responsible Investigators: John H. Lawrence
Cornelius A. Tobias

Research Fellows: John J. Bertrand
Rayburn W. Dunn

Contents:

A. Recovery and estimation of radioactive isotopes from biological tissues. I. Gold. By Rayburn W. Dunn.

B. Some physiological studies on rheumatoid arthritis. II. By John J. Bertrand and Cornelius Tobias

1173134

Archives and Records Office
Records Series Title DR. CORNELIUS TOBIAS'S PAPERS
Accession No. 434-89-0108
File Code No. 10-08-045
Carton No. 22/88
Folder No. 50 - MARKLE FOUNDATION
Notes
Found By C. HALL
Dates
COPY

RECOVERY AND ESTIMATION OF RADIOACTIVE ISOTOPES FROM BIOLOGICAL TISSUES. I GOLD.

Rayburn W. Dunn*

Division of Medical Physics, University of California, Berkeley

In order to study the distribution of gold in animal and human tissues, it was necessary to develop a rapid and quantitative method for the recovery and estimation of this element. Toward this end, use was made of the experience gained, during 1942 and later, with the electrodeposition methods employed on the Manhattan Project (unpublished papers, (1) (2)). Investigations along these lines were also encouraged by the successful use of electrodeposition in the determination of radioactive iron by Ross and Chapin (3), Hahn (4), and others.

By the use of the electrodeposition technic, thin, uniform films of the radio-element may be obtained, which can then be used for the determination of radioactivity. Standard Geiger or alpha counters are employed for these measurements, as the case may be.

As early as 1918, Dewitt, Caldwell, and Leavell (5), had shown that it was possible to determine gravimetrically the amounts of gold present in biological tissues, after electrodeposition on platinum electrodes. Details of the method employed by these authors could not be found, although a brief description was furnished; namely, Kjeldahl digestion, followed by evaporation to about 1 cc. Treatment with aqua regia, ammonia, and neutralization with HCl. The solution was filtered, made slightly acid with HCl, and buffered with phosphoric acid-sodium phosphate. Electrodeposition was carried out in

*Fellow, John and Mary Markle Foundation for the study of Rheumatoid Arthritis.

1173135

Records Series Title DR. CORNELIUS TOBIAS'S PAPERS
Accession No. 434-89-0100
File Code No. 10-08-065
Carton No. 22/99
Folder No. 50 - MARKLE FOUNDATION
Notes
Found By P. HALL
Dates
COPY

40 cc. of solution, at 60° C., and 1 to 1.2 volts. Current density was not given. Recoveries of 80 - 100% were obtained with 0.02 to 0.3 mg. of gold.

Scott (6) gives methods for the determination of gold in electroplate baths, and also outlines a micro-analytical procedure (7), each using platinum anodes and cathodes, and potassium cyanide plating solutions. Procedures for the commercial plating of gold are given in standard references and trade journals (8), (11), (12). Most of these methods employ gold anodes, and either chloride or cyanide plating baths.

In general, the method herein described follows closely the standard procedures for the separation and electrodeposition of gold.

EXPERIMENTAL

Electrodeposition apparatus The anode consists of 0.040" diam. platinum wire wound in a flat spiral. The vertical length of wire is sealed into glass and both are connected into a suitably drilled brass rod, 3/8" in diam. The latter is fixed in the chuck of a stirrer rotating at about 300 r.p.m.

Cathodes are 1½" diam. discs, 0.002" thick, either of platinum or gold-plated copper. Platinum must be used for exacting work, but, for reasons of economy, the plated copper was substituted in carrying out these experiments.

The electrodeposition cell, shown in Figure 1, uses a 1½" o.d. pyrex tube, 3" long.*

Operating current is supplied from two cells of a 6 volt storage battery. An ammeter with a range of 0 - 1 amp. and a 1 watt, 20 ohm rheostat are placed in series with the electrodeposition cell. The actual apparatus**

*Detailed drawings can be furnished upon request.

**Designed and constructed by Mr. Robert Loevinger, this laboratory.

1173136

Archives and Records Office
Records Series Title DR. CORNELIUS TOBIAS'S PAPERS
Accession No. 434-89-0100
File Code No. 10-08-065
Carton No. 22/59
Folder No. 50 - MACKLIN FOUNDATION
Notes
Found By P. HALL
Dates
COPY

consists of 24 such units, arranged in two banks of 12 each. Each unit has a toggle switch for throwing the ammeter in or out of the circuit. For work with gold, a better arrangement would be to use an ammeter with a scale of 0 - 0.2 amps. and a variable resistance of 50 ohms. Each unit should have a fuse to protect both the ammeter and the resistance, and a voltmeter should be provided to measure the potential drop between anode and cathode. The apparatus used for this work had been built for another purpose, and could not be modified in the time available.

Procedure The weighed tissues are digested in 25 ml Erlenmeyer flasks, using either aqua regia, or concentrated nitric acid plus superoxol. In either case, only small amounts of reagent are added at one time. If excessive frothing is encountered, one drop of octyl alcohol is added. Complete oxidation of the latter, as well as the tissue, must be accomplished before proceeding further.

As a carrier, 2.0 ml of a reagent grade gold chloride solution may be added either before or after digestion. The concentration of this solution should be accurately known, and the solution should contain approximately 5 mg./ml. of metallic gold, as the chloride. The concentration of gold in the carrier solution is determined either by electrodeposition on tared platinum discs, or by evaporating a known volume to dryness in a tared porcelain crucible, followed by heating to decompose the chloride, cooling, and weighing.

Upon completion of digestion, excess nitric acid is removed by adding successive small amounts of concentrated HCl, with heating. The resulting solution is evaporated to 1 - 2 ml. and transferred to a 15 ml. centrifuge cone. Only a roughly quantitative transfer is needed, since the electrodeposited film is to be weighed, and recoveries as low as 90, or even 80%, are acceptable.

1173137

Records Series Title DR. CORNELIUS TOBIAS' PAPERS
Accession No. 434-89-0108
File Code No. 10-08-069
Carton No. 22/99
Folder No. 50 - MACKLIN FOUNDATION
Notes
Found By R. HALL
Dates
COPY

The separation of the gold from all or nearly all of the associated elements in the tissue digest, is accomplished by reducing the gold to the metallic state. The reducing solution is made up to contain approximately 10% $NH_2OH \cdot HCl$ and 0.4% $FeSO_4 \cdot 7H_2O$. 2 ml. of a freshly prepared solution are used for each 10 mg., or less, of metallic gold. Reduction is hastened by placing the cones in a beaker of hot water which is kept just below the boiling point for 15 - 30 minutes.

After centrifuging, the supernatant liquid is discarded. The centrifuge cone wall and the gold may be washed, followed by centrifuging, and the wash solution also discarded. Although this is not considered necessary for routine work, it was carried through when the set of determinations shown in Table I were made.

The pellet of precipitated gold is readily dissolved in a mixture of 4 drops of concentrated HCl plus one drop of concentrated HNO_3. Placing the cone in a beaker of hot water accelerates the reaction, which is usually complete within 15 minutes.

The aqua regia solution of gold is made alkaline with 5 ml. of 1 N NaOH. After mixing, this solution is transferred to the electrodeposition cell. The latter should be assembled using a tared and numbered disc, and should have 2 ml. of a 5% solution of KCN in 0.1 N NaOH, covering the disc before the gold solution is added. The centrifuge cone is washed with distilled water, which is also poured into the cell. In routine work this is accomplished by filling the cone once with distilled water, followed by transfer to the cell.

The anode is placed in the solution at about 3/4" to 1" from the cathode. The current is adjusted to approximately 85 ma. Since the actual plating area is about 8.5 sq. cm., the current density will be 10 ma./sq.cm.,

1173138

Records Series Title DR. CORNELIUS TOBIAS'S PAPERS
Accession No. 434-89-0109
File Code No. 10-08-065
Carton No. 22/89
Folder No. 59 - MACELLE FOUNDATION
Notes
Found By R. HALL
Dates
COPY

or approximately twice the current recommended for commercial electroplating (9).

Deposition is allowed to proceed for one hour at room temperature. At the end of this time an additional 2 ml. of the cyanide solution are added, followed by another hour of electrodeposition.

Upon removal of the anode, the cell contents are discarded, and the cell is washed with distilled water. After disassembly, the disc is again washed, rinsed in acetone, and placed in a warm place to dry. The gross weight is generally obtained before the radioactivity is determined, although this is not essential.

Notes on the analytical procedure. 1. Digestion. As often happens in the wet digestion of biological tissues, there are occasional samples which precipitate difficultly soluble crystalline salts upon evaporation to small volume. When such occurred during this work, the solution and precipitate were transferred together to the centrifuge cone, and the procedure carried through as with the other samples. The presence of this material, which was always in very small amounts, apparently did not interfere with the results.

When octyl alcohol is used to prevent frothing, a waxy material is frequently formed which has a low melting point, and which may not be observed until the solution is cooled to below room temperature. Precautions should be taken to obtain complete digestion of this organic matter.

The use of nitric-perchloric acids for digestion was not investigated, since it was felt that the excess perchloric acid might react with the hydroxylamine, and thus interfere with the reduction of the gold. Excess nitric acid was removed for the same reason.

2. Reduction. The use of both hydroxylamine and ferrous sulphate was investigated. The latter reduced the gold more rapidly than the former, but

Records Series Title DR. CORNELIUS TOBIAS'S PAPERS
Accession No. 434-89-0100
File Code No. 10-08-069
Carton No. 22 / 88
Folder No. 50 - MACKLIN FOUNDATION
Notes
Found By P. HALL
Dates
COPY

gave a precipitate which dissolved less readily in aqua regia. When using $FeSO_4$, there was usually a small amount of unwetted gold floating on the meniscus after centrifuging. This gold was either lost upon decantation, or had to be removed on a stirring rod, and returned later. Reduction with hydroxylamine occurred in three distinct phases; namely, reduction to aurous, formation of colloidal gold, and finally, precipitation of the metal. Unwetted gold was not usually obtained when this reagent was employed, but the formation of a light "gold mirror" was frequently observed. When a mixture of both reductants was used, both phenomena were less pronounced, and the rate of reduction was about the same as with ferrous sulphate alone.

The influence of acidity and salt concentration upon the rate of reduction and character of precipitated gold was not investigated. A considerable range of conditions was encountered, but the results in all cases were satisfactory.

3. Solution of gold in aqua regia. When mirror formation was encountered, the cone was placed in only about 1" of hot water to hasten the dissolving reaction. Sufficient aqua regia condensed on the wall of the cone to dissolve the mirror completely.

4. Addition of NaOH. If insoluble salts are present after digestion, a white precipitate is usually present, or is formed, at this point. If desired, this insoluble material may be removed by centrifuging before the solution is transferred to the electrodeposition cell. This was not done with the experiments reported.

5. The cathode disc. Both platinum and gold-plated copper discs may be cleaned by immersing in warm concentrated sulphuric acid-dichromate cleaning solution. With the latter type of disc, immersion should not be for longer than 2 to 3 minutes, since the plate does not offer sufficient protection to the copper to prevent its dissolving. Both types of disc must be thoroughly

1173140

Records Series Title DR. CORNELIUS TOBIAS'S PAPERS
Accession No. 434-89-0100
File Code No. 10-08-069
Carton No. 22/99
Folder No. 50 - MARCUS FOUNDATION
Notes
Found By P. HALL
Dates
COPY

rinsed with water after this treatment. The platinum discs may be dried directly, but an acetone rinse is first recommended for the gold-plated copper. Heating the platinum discs over a burner, in order to dry them, is not recommended, since they then lost their temper, and are more difficult to handle without bending.

Early experiments carried out by Bertrand (13), indicated that plain copper discs lost, rather than gained weight, during electrodeposition. Without investigating this problem further, it was decided to try gold-plated copper discs in the hope that the formation of oxide film on the surface of the copper, and attack of the copper by the cyanide plating solution, could thus be reduced or eliminated. The alternatives were to use either gold or platinum discs, which, in view of the number needed, and difficulties involved in removing the radioactive layer, would not be economical. While the use of plated copper did not entirely eliminate the weighing error, the results obtained were satisfactory for this type of analysis.

The thickness of the gold plate, which was done commercially, was not determined. The actual plating was done on strips of copper 14" x 1-3/4" x 0.002". The 1½" diam. discs were then punched out.

6. Electrodeposition. It was frequently observed that the plated discs in the assembled cells would discolor upon transferring the gold solutions to them. This occurrence was minimized, but not entirely eliminated, by adding the cyanide solution to either the cone or the electrodeposition cell before transferring. Neither the cause of this reaction, nor its influence upon the gravimetric determination, was investigated.

The color of the gold plate on platinum discs was either yellow or light orange, while that on gold-plated copper varied from light rose to brown. The color, in the latter case, as pointed out by Weisberg and Graham (10), was probably due to the presence of copper in the plating solution. Gold plates on platinum frequently showed small blisters, in which case the deposit was

1173141

Archives and Records Office
Records Series Title DR. CORNELIUS TOBIAS'S PAPERS
Accession No. 434-89-0108
File Code No. 10-08-068
Carton No. 22/88
Folder No. 58 - MACELLE FOUNDATION
Notes
Found By R. HALL
Dates
COPY

easily broken loose upon scratching. The use of a wetting agent, such as one of the alkyl aryl sulphonates, as outlined by Hartshorn (13), might eliminate this difficulty. Blistering was not observed with the plated copper discs, but the deposit on these discs could be rubbed off to an appreciable extent, perhaps due to the admixture of copper.

The decision to use alkaline cyanide plating solutions, rather than acid chloride, was based upon the assumption that, in the case of the latter, there would probably be some attack of the platinum anode due to the formation of free chlorine, and, therefore, deposition of platinum with the gold. The possibility of attack on the platinum by the cyanide, however, is not ruled out.

RESULTS

The data shown in Table I should be divided into three groups. Determations 77 through 84 were carried out with what is considered to be the proper amount of carrier gold to insure complete recovery of the radioactivity, and at the same time to give a sufficient amount of deposit for gravimetric purposes; namely, 10 mg. Determinations 85 through 92 were carried out with less than 10 mg. of carrier gold. With both of these groups, the various solutions were added directly to the assembled electrodeposition cells; as follows: 5 ml. of 1 N NaOH, 4 drops of concentrated HCl, one drop of concentrated HNO_3, 2 ml. of 5% KCN, the carrier gold solution, and the radio-gold solution. Distilled water was added in each case to make a total volume of approximately 30 ml. Determinations 77 through 92 were, actually, 8 sets of duplicates.

The third group comprises determinations 93 through 96. This group of four identical determinations was carried out to test the recovery and electroplating procedures under carefully controlled conditions. For this purpose, three normal adult mice, weighing 20 to 25 grams each, were dry ashed in the

Records Series Title DR. CORNELIUS TOBIAS' PAPERS
Accession No. 434-89-0109
File Code No. 10-08-065
Carton No. 22/99
Folder No. 50 - MACELIC FOUNDATION
Notes
Found By P. HALL
Dates
COPY

muffle furnace at 600° C. The ash was taken up in aqua regia, and the excess HNO_3 removed, as outlined in the procedure. The resulting solution was diluted to 150 ml., and 10 ml. portions were used for each of these four determinations. The carrier and radioactive gold solutions were added, and the procedure above was then followed.

Two typical sets of biological data are given in Table II. These data were collected during the course of the arthritis work carried out by Bertrand and Tobias (15). These separations and electrodepositions were actually carried out before the data, shown in Table I, were obtained.

DISCUSSION

No explanation is offered for the 101% average recovery of added gold, Table I. Since the error involved in biological work is usually greater than the error which would be introduced by using the percent carrier gold recovery as a factor in calculating the radio-gold recovery, no further work was carried out to eliminate this discrepancy. The percent recovery values, shown in Table II, were therefore used in calculating the original tissue gold activity (15), not reported herewith.

One surprising result obtained, as shown in Table I, determinations 85 and 86, was the 91% recovery of radioactive gold when no carrier gold was added to the solution in the electrodeposition cell. The solution of radioactive gold contained 5 micrograms of metallic gold per ml., in the form of sodium gold thiosulphate. The quantitative recovery of gold, during electrodeposition, therefore, was greater than one would be led to expect, the loss in disc weight notwithstanding.

In carrying out the gold purification procedure with tissue digests from the arthritic patient, $FeSO_4$ was used as a reductant. Trouble was experienced

Records Series Title DR. CORNELIUS TOBIAS' PAPERS
Accession No. 434-89-0100
File Code No. 10-08-063
Carton No. 22/99
Folder No. 50 - MARCELLUS FOUNDATION
Notes
Found By R. HALL
Dates
COPY

only with the urine and feces samples. Upon adding the reductant to the digested solutions from these samples, a red-brown flocculent precipitate was obtained in three of four cases. The fourth case appeared to give a normal precipitate, but, unfortunately, the sample was lost upon centrifuging, and a better observation could not be made. The abnormal precipitates were completely soluble in concentrated HCl, showing that reduction had not occurred. The addition of hydroxylamine to these samples gave normal precipitation of the gold. The use of the mixed reducing solution with these two types of sample, has not been tried, principally for lack of time.*

The results with the rabbit tissue samples, also shown in Table II, were obtained using hydroxylamine alone as a reductant. All determinations given in Table II were carried out using "routine," or roughly quantitative transfer technics.

SUMMARY

1. A method is described for the recovery and estimation of radioactive gold from biological tissues.

2. The results obtained with this procedure are well within the allowable error for this type of determination.

3. Under a rather wide range of conditions, satisfactory results were obtained in all cases.

4. The method is rapid, requiring no special technics, and the electrodeposition equipment is fairly simple.

ACKNOWLEDGEMENTS

The author is indebted to J.H. Lawrence, C.A. Tobias, and J.J. Bertrand for their assistance and advice; and to Jean Luce for the digestion of the many biological samples needed for this work.

*Since writing the above, it has been found that $FeSO_4$ must not be used with hydroxylamine for reducing these samples.

1173144

Archives and Records Office
Records Series Title DR. CORNELIUS TOBIAS'S PAPERS
Accession No. 434-89-0108
File Code No. 10-08-065
Carton No. 22/89
Folder No. 50 - MARKLE FOUNDATION
Notes
Found By C. HALL
Dates
COPY

The early radioactive gold samples were supplied through the courtesy of J.G. Hamilton, and later, by the Atomic Energy Commission.

This work was wholly supported by grants from the John and Mary Markle Foundation for the study of Rheumatoid Arthritis.

BIBLIOGRAPHY

(1) Kahn, M., and Dunn, R.W., "The Preparation of Thin T_3O_8 (U_3O_8) Films." Univ. of Calif. Rad. Lab. Special Report No. 24 (1943). (Classified)

(2) Lilly, R.C., Paper No. 4. Manhattan Project Technical Series, Contributions of the Radiation Laboratory, University of California. (Declassified).

(3) Ross, J.F., and Chapin, N.A., Rev. Sci. Inst., 13, 77(1942).

(4) Hahn, P.F., Ind. Eng. Chem., Anal. Ed., 17, 45 (1945).

(5) DeWitt, L.M., Caldwell, S.N. and Leavell, G., J. Pharmacol. and Exper. Therap., 11, 357 (1918).

(6) "Scott's Standard Methods of Chemical Analysis," 5th Ed., Vol. I, p. 435, ed. by N.H. Furman, D. Van Nostrand Co., N.Y., 1939.

(7) Ibid., Vol. II, p. 2518.

(8) "Modern Electroplating," pp. 199-210, The Electrochemical Society, Columbia University, N.Y., 1942.

(9) Ibid., p. 202.

(10) Ibid., p. 204.

(11) "Plating and Finishing Guide Book," Metal Industry Publishing Co., New York, N.Y., yearly editions.

(12) "Products Finishing," Gardner Publishing Co., 431 Main Street, Cincinati, O.

(13) Bertrand, J.J., private communication.

(14) Hartshorn, D.S., Jr., "Plating and Finishing Guide Book," 9th ed., p. 65 (1940).

(15) Bertrand, J.J., and Tobias, C.A., "Some Physiological Studies on Rheumatoid Arthritis." To be published.

1173145

Records Series Title DR. CORNELIUS TOBIAS' PAPERS
Accession No. 434-89-0100
File Code No. 10-08-065
Carton No. 22/58
Folder No. 50 - MARKLIN FOUNDATION
Notes
Found By R. HALL
Dates
COPY

Table I

Recovery of radioactive gold from solutions containing varying amounts of radioactivity and carrier.

Determination No.	Normal Gold Added Mg.	Radio Gold Added Ml.	Increase in disc weight Mg.	% recovery for normal gold	Counting Data: Counts per ml. Au^{198} per min.	Counting Data: Counter shelf No.	Counting Data: Elapsed time Hrs.	Extrapolated Count Shelf 2 Time = 0	% Recovery of radioactivity **
77	10.3	1	10.3	100	340	4	2	2400	-
78	10.3	1	10.5	102	330	4	2	2350	-
79	10.3	2	10.5	102	1610	2	36	2400	-
80	10.3	2	10.4	101	1585	2	36	2350	-
81	10.3	5	10.2	99	330	4	2	2350	-
82	10.3	5	10.4	101	335	4	2	2400	-
83	10.3	10	10.4	101	330	4	3	2350	-
84	10.3	10	10.4	101	320	4	3	2300	-
85	0	2	-0.3	-	1480	2	35	2150*	91
86	0	2	-0.4	-	1480	2	35	2150*	91
87	1.0	2	1.0	100*	1400	2	45	2300*	98
88	1.0	2	0.9	90*	1400	2	45	2300*	98
89	2.1	2	1.9	90*	1385	2	45	2250*	96
90	2.1	2	2.1	100*	1435	2	45	2350*	100
91	5.1+	2	5.1	99	1450	2	45	2350	-
92	5.1+	2	5.2	101	1435	2	45	2350	-
93	10.3	2	10.6	103	1450	2	46	2350	100
94	10.3	2	10.5	102	1435	2	46	2350	100
95	10.3	2	10.6	103	1435	2	46	2350	100
96	10.3	2	10.5	102	1400	2	46	2300	98
			Average	101			Average	2350	

* Not included in the averages ** Based upon 2350 counts per ml. per min.

Counts on shelf 4 x 6.9 (approx.) = counts on shelf 2.

1173146

Records Series Title DR. CARNELIUS TOBIAS' PAPERS
Accession No. 43V-E9-0103
File Code No. 10-08-065
Carton No. 23
Folder No. 50 - MAGNETIC EQUIPMENT
Notes
Found By P. HALL
Dates
COPY

117147

Table II

Recovery of gold from ashed biological tissue solutions. 9.8 mg. of carrier gold added.

Arthritic Patient					Rabbit				
Detn. No.	Tissue Sample	Sample Weight or Volume	Carrier Gold Recovery Mg.	% Recovery	Detn. No.	Tissue Sample	Sample Weight or Volume	Carrier Gold Recovery Mg.	% Recovery
21	Synovia	0.33 gm.	9.2	94	39	Kidney	5.0 gm.	9.6	98
22	Muscle	0.71 gm.	9.8	100	40	Spleen	2.0	9.7	99
23	Superficial Fascia & fat	1.22 gm.	9.7	99	41	Testicle	2.8	9.7	99
24	Skin	0.31 gm.	9.4	96	42	Articular Cortex	2.6	9.6	98
25	Deep Fascia	0.31 gm.	9.8	100	43	Articular Cortex	3.0	9.8	100
26	Blood	2 ml.	9.8	100	44	Adrenal	0.2	9.7	99
27	Blood	2 ml.	9.7	99	45	Liver	6.2	9.5	97
28	Blood	2 ml.	8.0	82	46	Marrow	1.2	7.9	81*
29	Blood	2 ml.	9.4	96	47	Lung	3.3	10.0	102
30	Blood	2 ml.	9.5	97	48	Aorta	0.3	9.3	95
31	Blood	2 ml.	9.1	93	49	Synovia	0.2	9.6	98
32	Blood	2 ml.	9.3	95	50	Synovia	0.4	9.6	98
33	Blood	2 ml.	9.3	95	51	Tendon	0.2	9.5	97
34	Blood	2 ml.	9.1	93	52	Tendon	0.2	9.4	96
35	Synovial Fluid	1.5 ml.	8.8	90	53	Small Intestine	2.8	9.4	96
36	2nd Day Urine	100 ml.	9.0	92	54	Bone	1.0	9.6	98
37	1st Day Feces	Total**	8.5	87	55	Heart	3.1	9.8	100
38	2nd Day Feces	Total**	9.4	96	56	Muscle	4.1	6.5	67*
					57	Skin	0.8	9.8	100
		Average		94			Average		98

*Electrodeposition cells leaked. Values not included in the average. ** Weight not obtained.

Records Series Title DR. CORNELIUS TOBIAS'S PAPERS
Accession No. 434-89-0108
File Code No. 10-08-068
Carton No. 22/88
Folder No. 50 - MARKUS FOUNDATION
Notes
Found By P. HALL
Dates
COPY

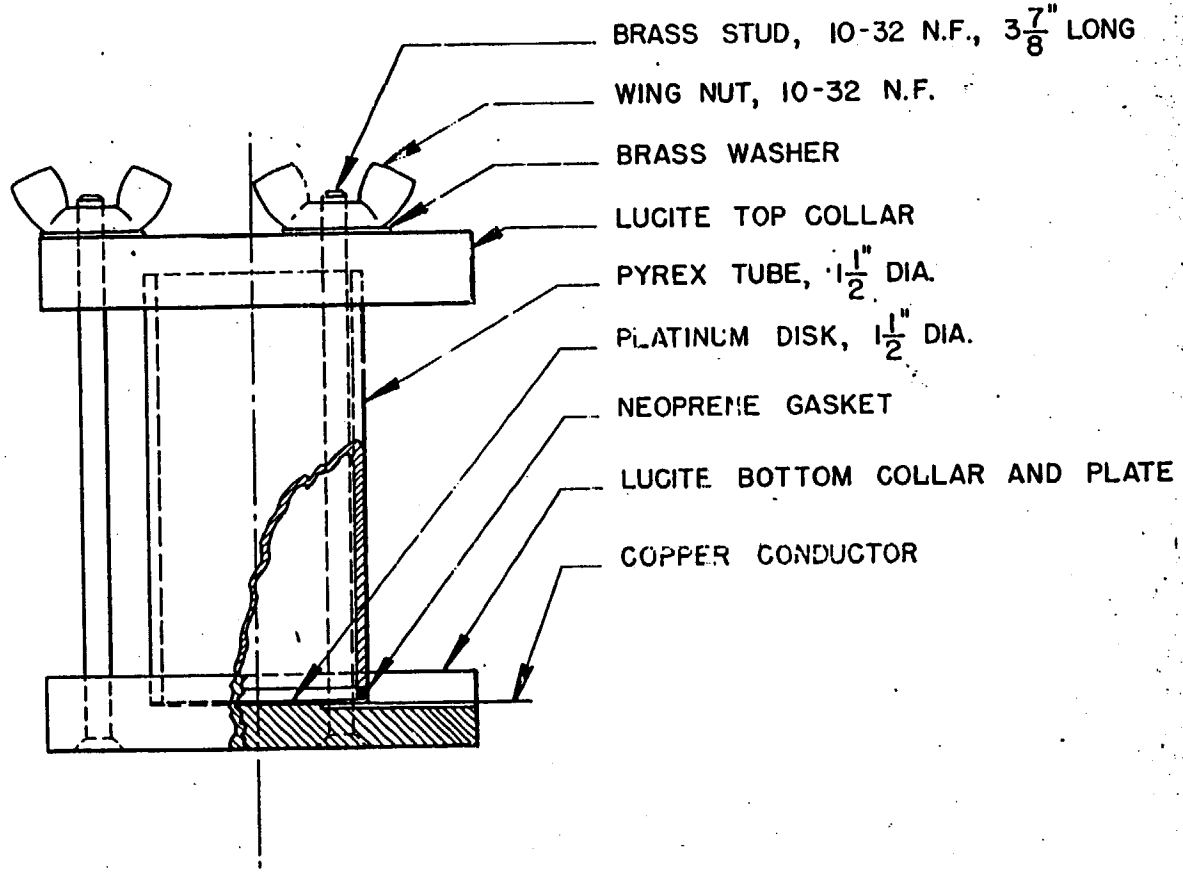

FIG. 1. ELECTRODEPOSITION CELL

1173148

Records and Research Units
Records Series Title DR. CORNELIUS TOBIAS'S PAPERS
Accession No. 434-89-0108
File Code No. 10-08-068
Carton No. 22 / 89
Folder No. 50 - MARKLE FOUNDATION
Notes
Found By P. HALL
Dates
COPY

Some Physiological Studies on Rheumatoid Arthritis

by

John J. Bertrand -- Cornelius A Tobias*

Introduction

A year ago we set out to study certain physiological factors in rheumatoid arthritis. One of these was the circulation of the extremities. Very little new was done in this field during the past six months because we tried to focus our attention on a second factor, the study of which was also begun last year: the fate of gold in the human and animal body. Using the convenient radioactive isotope Au^{198}, some gold distribution data have been obtained and reported in December, 1946. After a few initial experiments it became obvious that a more careful study would be desirable

---

*We wish to acknowledge the support and active participation of Dr. John H. Lawrence, Director of the Donner Laboratory of Medical Physics; of Professor Kerr, Chairman of the Department of Medicine of the University of California; of Dr. Hans Waine of the Department of Medicine; and of Dr. Inman of the Department of Surgery.

All work was done at the Donner Laboratory of Medical Physics, with the exception of the human experiment, which was made possible through the cooperation of the University of California Medical School.

The work was supported through a grant from the John and Mary Markle Foundation. The radioactive gold was supplied by the Isotope Branch, Atomic Energy Commission.

1173149

Records Series Title DR. CORNELIUS TOBIAS'S PAPERS
Accession No. 434-89-0108
File Code No. 10-08-063
Carton No. 22/88
Folder No. 50 - MACKLIN FOUNDATION
Notes
Found By C. HALL
Dates
COPY

and that the dynamic picture in the exchange and distribution of gold is very important. Further, the fate of gold in the body seemed to be a sensitive function of presence or absence of infection. The following chapters outline various types of experiments to elucidate this point. These experiments may point a way to the understanding of the mechanism of action of gold drugs.

Gold Distribution Studies in the Rabbit

Rabbits were used as subjects in carrying out the gold distribution experiments. Radioactive gold was injected intravenously in the form of the sodiumthiosulphate salt. All radioactive gold, (Au^{198}), was obtained from the Oak Ridge pile and was processed by Robert Lilly of the chemistry staff of the University of California Radiation Laboratory.

The rabbits were sacrificed at varied intervals and before sacrifice, under ether anesthesia, were perfused with from one to two liters of N-saline solution. This was done by introducing saline into the proximal end of the inferior vena cava and allowing the animal to bleed through the distal end of the same vessel.

In Table I the distribution of radioactive gold in two rabbits is reported in terms of percent of total administered dose per gram wet tissue 15 and 17 days after injection of the soluble gold.

It will be noted that values in animals "A" and "B" show considerable variation. Animal "A" had received turpentine into its knee joint to produce a chemical arthritis, while animal "B" was normal. Further studies are made to find out the statistical significance and the possible cause of the difference.

1173150

Archives and Records Office
Records Series Title DR. CORNELIUS TOBIAS' PAPERS
Accession No. 434-89-0108
File Code No. 10-08-663
Carton No. 22/89
Folder No. 50 - MACELLE FOUNDATION
Notes
Found By R. HALL
Dates
COPY

Table No. 1

Gold Distribution in Rabbits

Assay by the electrodeposition method

	Rabbit A (chemical arthritis) Dose 695 μc Au^{198} 2.5 mg. Au Sacrificed 15 days after injection		Rabbit B (normal) Dose 404 μc Au^{198} 1.0 mg. Au Sacrificed 17 days after injection	
	% of injected dose per g tissue	% injected in whole organ	% of injected dose per g tissue	% injected in whole organ
Kidney	.34	7.14	.07	1.47
Spleen	.14	.42	.03	.1
Testicle	.034		.010	
Articular Cortex (Bone)	.04		.007	
Adrenal	.053		.03	
Liver	.102	6.53	.006	.42
Marrow	.085	4.67	.013	.71
Lung	.03	1.20	.006	.24
Aorta	.032		.012	
Synovia	.056		.014	
Tendon	.021		.023	
Small intestine	.015	4.85	.006	1.9
Bone	.002	.7	.014	4.9
Heart	.026	.28	.009	.1
Muscle	.005	5.05	.002	2.52
Skin	.038	4.06	.016	1.76
Blood		.64		.86
Lymph node			.012	
Total in body		35.54%		14.96

The dry ashing technique described in the previous report has certain inherent sources of error; mainly, self absorption by inorganic matter present in the dishes that are used for counts. This will vary in amount according to the tissue concerned; a sample of bone containing large amounts of inorganic material, while an organ such as adrenal will contain very little. For this and other reasons much time was spent in developing a method of gold separation by electrodeposition, which work was developed by Mr. Rayburn W. Dunn, a description of which appears in this report.

1173151

Records Series Title DR. CORNELIUS TOBIAS' PAPERS
Accession No. 434-89-0100
File Code No. 10-08-063
Carton No. 22/88
Folder No. 50 - MACELIE FOUNDATION
Notes
Found By R. HALL
Dates
COPY

The results obtained from the electro-deposition method varied somewhat
1 from those of the dry ashing. As will be seen in the detailed report on the electrolytic process, the results are very accurate in respect to recovery of gold and uniformity of counts for unit weight gained by the copper planchets.

In preparing tissue samples for the deposition process, all specimens were weighed on an assay balance and then digested with nitric and hydrochloric acids, using hydrogen peroxide as an oxidative aid. This takes from 24 to 72 hours to do and is very laborious. At the present time we are trying a more rapid method, whereby the tissues are diced, dried and ashed in a muffle furnace at 650° C. The ash is then dissolved in aqua regia and put through the standard electrolytic process. By this means it is hoped to avoid losses, which occur not infrequently during acid digestion, due to boiling over of the solution and also important, to save time.

The results obtained are somewhat similar to those published by Freyberg (1), using the method of Block and Buchanon (2), which depends on a colorometric test. (See Table 2.)

	mg/gm	% total injected
Heart	.003	.02
Lung	.015	.11
Spleen	.038	.27
Liver	.217	1.55
Kidney	.758	5.41

Table 2.

Gold Distribution in Rats. (Freyberg, et al.)

1173152

Records Series Title DR. CORNELIUS TOBIAS'S PAPERS
Accession No. 434-89-0105
File Code No. 10-08-065
Carton No. 22/88
Folder No. 50 - MACKLIN FOUNDATION
Notes
Found By C. HALL
Dates
COPY

Comparing these results to those obtained by us--considering the same series of tissues--we see that spleen is second in activity to kidney, instead of liver; the other organs in their group agree with our findings. The several other references in the literature on gold distribution were rather incomplete. (3, 4, and 5.) One other study using radioactive gold as a tracer was done in 1940 by Ely (5), however, the methods used were not well standardized and the results were inconsistent.

Gold Distribution in Blood

During the course of these investigations it was thought worth while to study the fate of gold in the blood stream with a view of determining how the gold salt is transported through the blood to the various tissues of the body. It has been stated in the literature (1) that erythrocytes contain no gold. In order to check these findings a series of experiments were set up.

The first thing done was simply to take whole blood from an animal previously injected with radio-goldthiosulphate and separate the cells from the plasma by centrifugation. The cells were then washed twice, ashed and counted, the plasma likewise being ashed and counted. In percent of total radioactivity of blood: cells 56.2%, plasma 43.8%. This experiment was repeated "in vitro", varying it by using different strengths of radioactivity to see if cells would absorb more activity in stronger solutions. Four cc. of blood were removed from a normal rabbit and mixed with 50 cc. saline. Four 10 cc. samples were taken of this suspension and mixed with .1, .2, .3 and .4 cc. of the radioactive gold solution. The cells were exposed to the radioactive solution for a period of 1½ hours at room temperature, were then washed twice, ashed, and counted. All supernatant fluids were saved and ashed. From the data (Table 3) it appears that the cells freely absorb the solution employed; however, it is not proved that the gold is entering the cells, identical values being possible if the gold were merely being absorbed onto the cell membrane.

1173153

Records Series Title DR. CORNELIUS TOBIAS'S PAPERS
Accession No. 434-89-0108
File Code No. 10-08-065
Carton No. 22/89
Folder No. 50 - MACELLE FOUNDATION
Notes
Found By R. HALL
Dates
COPY

Radioactivity of blood after exposure to Au^{198} for 1½ hours. Values expressed in counts per minute.

Table 3

Sample	Authiosulphate	Cells c/min	Supernatant (plasma)
1	0.1 cc	990	3,650
2	0.2 cc	1610	7,360
3	0.3 cc	1985	10,300
4	0.4 cc	2060	15,230

A sample of five cc blood was removed from a rabbit previously injected with radioactive gold thiosulphate. This sample was mixed with 50 cc. saline; 5 cc. of this was taken and centrifuged. The blood cells (Sample 1-C) were separated from the supernatant liquid (Sample 1-S). The remaining 45 cc. suspension was then centrifuged and the cells washed twice, resuspended in 45 cc. saline and allowed to stand at room temperature for 75 minutes. A second 5 cc. sample was taken, the cells being then separated from suspension (Samples 2-S,2-C). Remainder of suspension centrifuged and cells resuspended in 40 cc. saline. After 75 minutes a third sample was taken (3-S, 3-C). All of these samples were then ashed in porcelain dishes and counted. Results are given in Table 4.

Table 4

Partition of gold between blood cells and saline

Cells	Counts/ml min	Supernatant	Counts/ml min	Time
1-C	694	1-S	5650	0 min.
2-C	156	2-S	60	75 min.
3-C	100	3-S	85	150 min.

There is an indication that some of the gold is bound to the cells, for even though the radioactivity of the cells falls off with each washing, there is still considerable left at the end of the experiment. The value 100 for 3-C

1173154

Records Series Title DR. CORNELIUS TOBIAS'S PAPERS
Accession No. 434-89-0100
File Code No. 10-08-069
Carton No. 22 / 99
Folder No. 50 - MARKLE FOUNDATION
Notes
Found By P. HALL
Dates
COPY

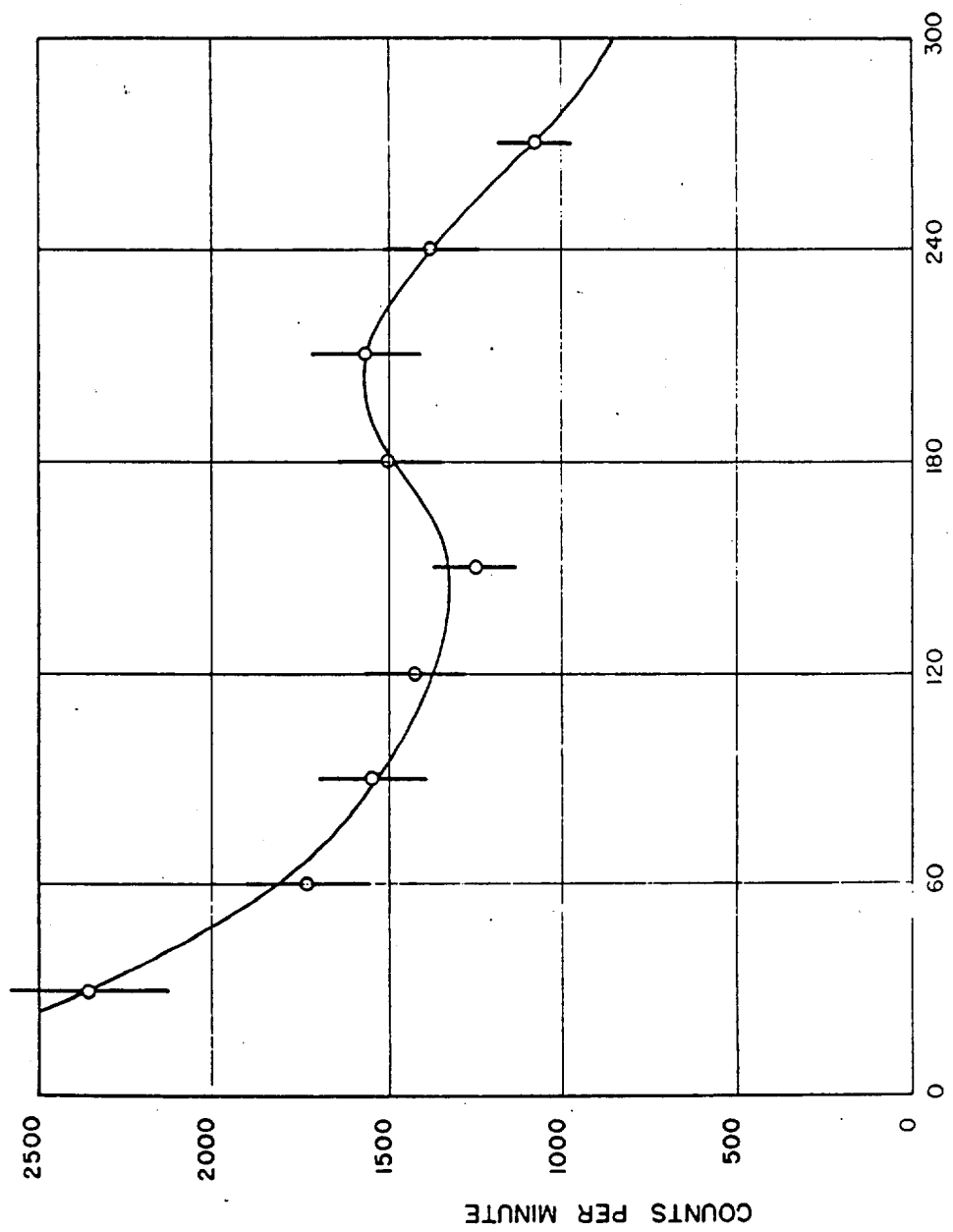

GOLD CONCENTRATION (Au^{198}) IN BLOOD OF DOG

1173155

Records Series Title DR. CORNELIUS TOBIAS'S PAPERS
Accession No. 434-89-0100
File Code No. 10-08-063
Carton No. 22/99
Folder No. 50 - MARKLE FOUNDATION
Notes
Found By P. HALL
Dates
COPY

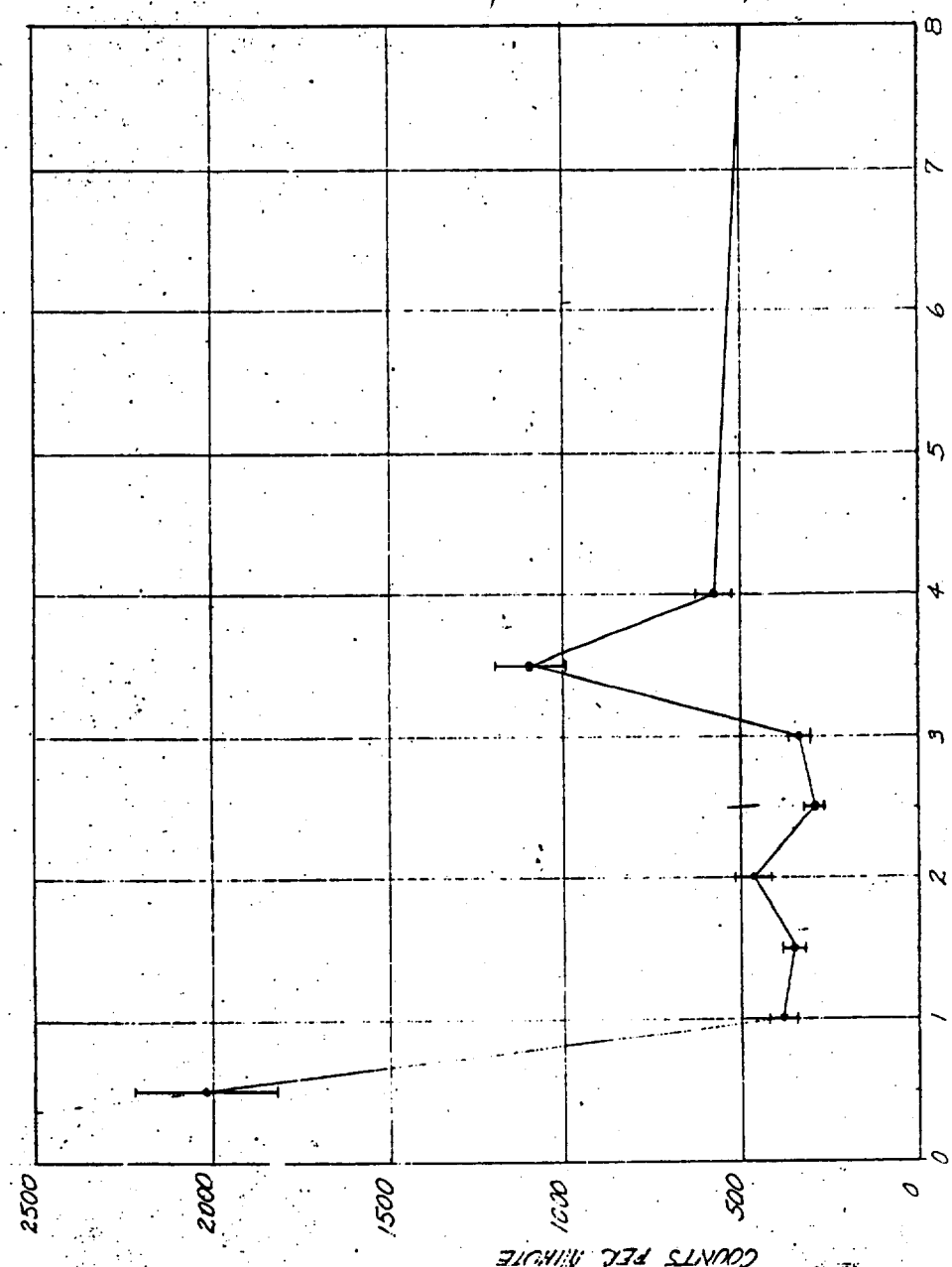

CONCENTRATION OF GOLD (Au^{198}) (AS SODIUM THIOSULFATE) IN BLOOD OF RABBIT.

1173156

Records Series Title DR. CORNELIUS TOBIAS' PAPERS
Accession No. 434-89-0108
File Code No. 10-08-069
Carton No. 22/88
Folder No. 50 - MACKLIN FOUNDATION
Notes
Found By P. HALL
Dates
COPY

is still approximately one-seventh its strength after repeated washings and a lapse of 1½ hours time. At the present time experiments are being set up by which we hope to be able to demonstrate definitely where the gold is found.

Time Distribution of Gold in Blood

For several reasons we thought it important to determine the rate which gold left the blood stream after an i-v injection.

We first used a dog under nembutal anesthesia. A tracer dose was injected in the anterior tibial vein and 30 minutes after radio goldthiosulphate was injected, the first blood sample was drawn, this being continued at half hourly intervals for 4½ hours. These samples were then ashed in the routine way and counted. Graph #1 shows the results. The experiment was repeated on mice, rabbits, (graph #2) and one human, (graph #4), all of which suggested the same process; e.g., a removal of the drug from the blood stream with a subsequent partial return and a final drop. A possible explanation of this could be that the liver is removing the drug from the general circulation, changing it in some way - perhaps into a less toxic form - and then giving it back to the circulation. An attempt was made to discover that the liver was involved in this phenomena. A Geiger counter placed over the exposed liver of a rabbit failed to indicate accumulation and subsequent release of radiogold. Presently a second theory is being tested: namely, that some of the gold gets phagocytized, then is released into the circulation contained in the white cells.

Radio-autography

As an aid to the problem of gold distribution it was felt that the taking of radio-autographs would be instructive, consequently autographs of various organs were made, of which some of the better are printed here. We strongly desired to obtain autographs of bone and joint structures and this was done by Miss Dorothy Axelrod, using her technique of sectioning undecalcified bone (6).

1173157

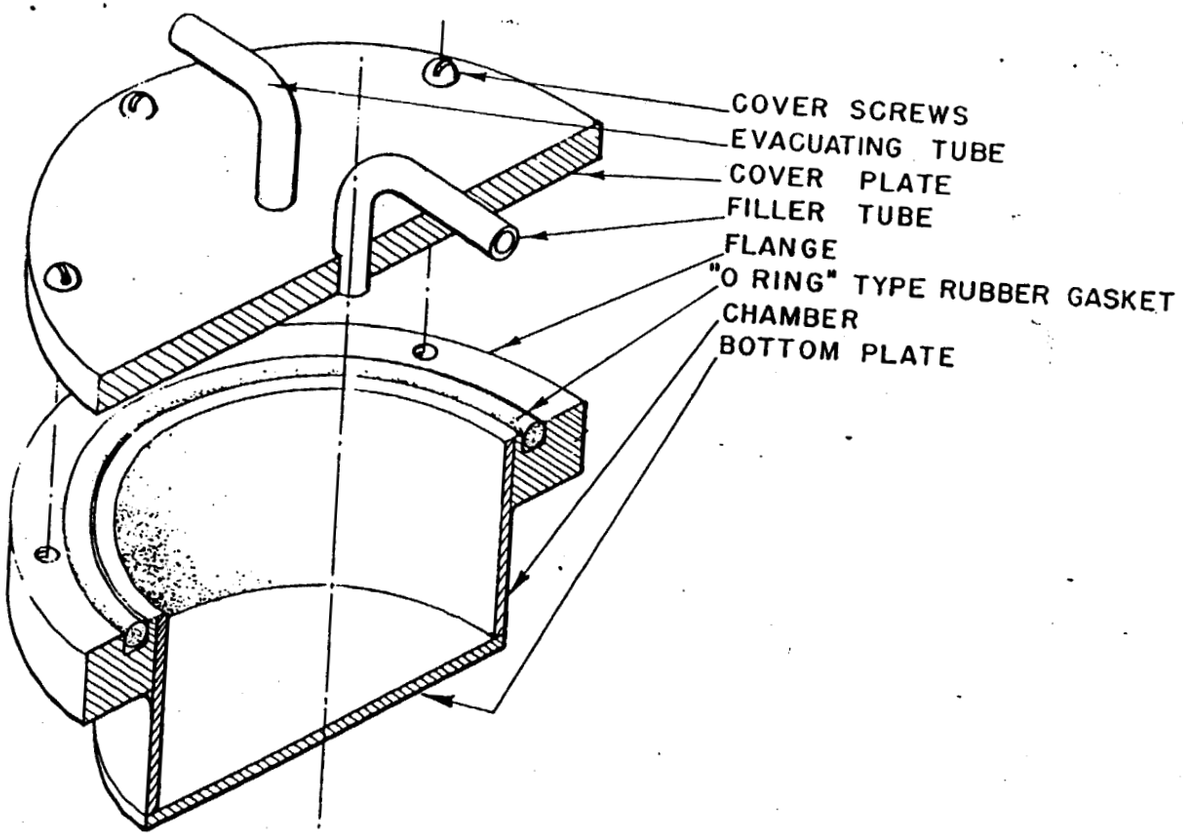

BONE SPECIMEN IMPREGNATING BOMB

Archives and Records Office
Records Series Title DR. CORNELIUS TOBIAS' PAPERS
Accession No. 434-89-0103
File Code No. 10-08-069
Carton No. 22/89
Folder No. 50 - MARKUS EDUNDATION
Notes
Found By P. HALL
Dates
COPY

1173158

Records Series Title DR. CORNELIUS TOBIAS'S PAPERS
Accession No. 434-89-0108
File Code No. 10-08-063
Carton No. 22 / 58
Folder No. 50 - MARCELLE FOUNDATION
Notes
Found By R. HALL
Dates
COPY

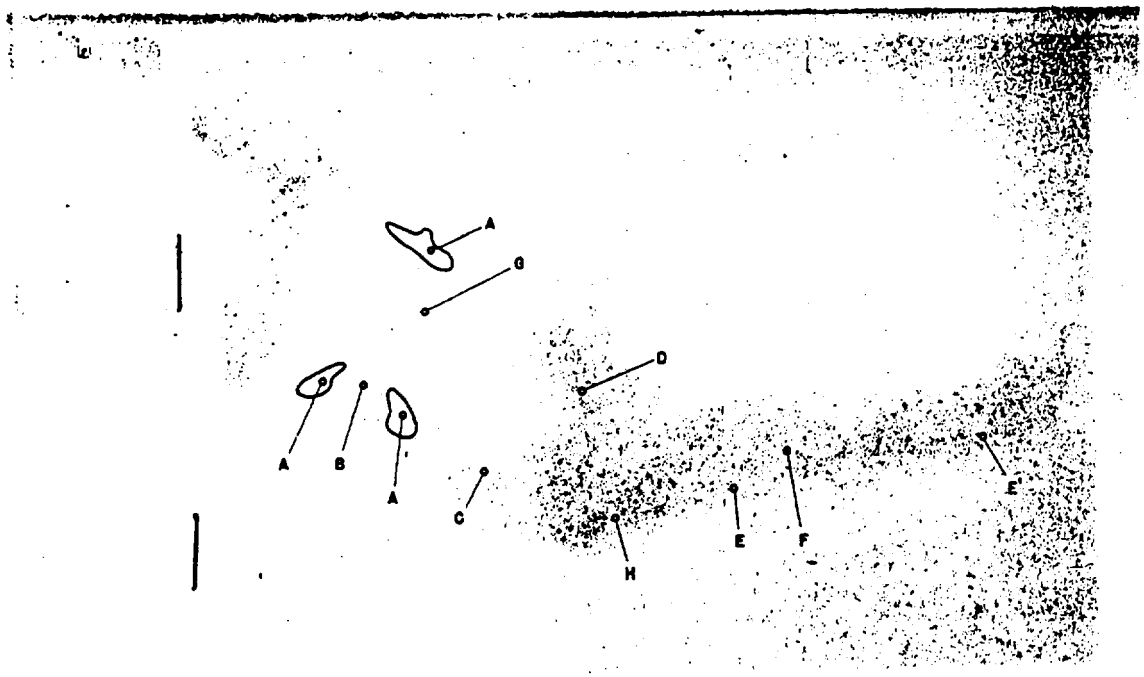

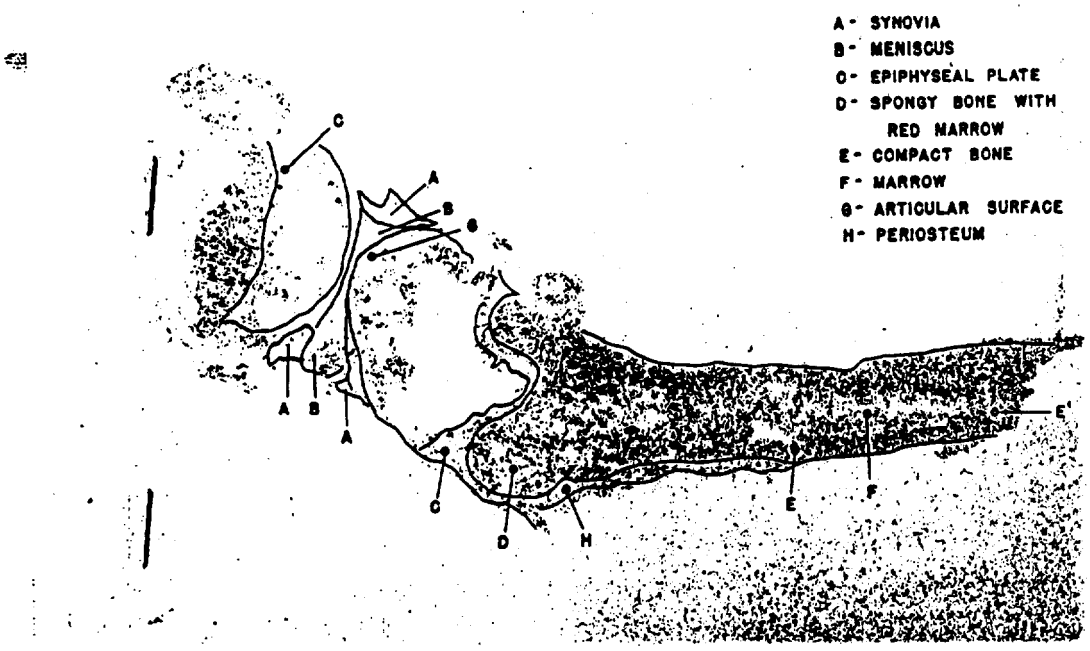

1173159

Records Series Title DR. CORNELIUS TOBIAS' PAPERS
Accession No. 434-89-0108
File Code No. 10-08-065
Carton No. 22/88
Folder No. 58 - MACKLIN FOUNDATION
Notes
Found By R. HALL
Dates
COPY

We ran into difficulty, however, because of the short half life of gold, which is 65 hours. Axelrod's technique makes use of celoidin imbedding, which takes about 10 days in the case of bone. Because of the elapsed time, radioactivity became much too low to get a satisfactory picture. The problem was one of penetration time of the celoidin into the bone. It was thought that if all gases could be eliminated from the bone and then pressure applied to the bone submersed in celoidin - a process used commercially - the ten day period could be reduced. For this purpose a metal chamber, large enough to contain an imbedding dish and fitted with two outlet tubes was constructed.(See diagram 3) A vacuum of 5 mm Hg. was applied by means of a standard Hi-Vac pump for a period of 30 minutes, the vacuum made use of to instill the celoidin and then approximately three atnospheres pressure applied overnight. By these means satisfactory imbedding was achieved in 24 hours, the resulting sections (5 microns) were good and radioautographs of articular structures were made.

Plate one shows a five micron undecalcified section of rat bone through the knee joint. The second plate shows a radioautograph made from the same section. A number of facts about gold deposition can be seen in the autograph. The synovial membrane can be seen fairly clearly defined (A). The articular surface (G), and the menisci (B) apparently take up very little gold. Spongy bone of the metaphysics has a good exposure, probably due to the content of marrow. The periosteum at (H) has considerable activity. Compact bone at (E) seems to have little activity, while at (e) it is markedly higher. Unfortunately, the periarticular structures, such as capsule and Quadriceps tendon were lost in sectioning.

Chemical Arthritis

We have made a few preliminary studies on producing a chemical arthritis and noting its effect on the distribution of gold, being interested mainly in the articular structures.

1173160

Records Series Title DR. CORNELIUS TOBIAS'S PAPERS
Accession No. 434-89-0105
File Code No. 10-08-045
Carton No. 22/99
Folder No. 50 - MACELIN FOUNDATION
Notes
Found By P. HALL
Dates
COPY

Two rabbits were used, one knee joint of each being injected with 0.5 cc of a solution composed of USP turpentine, 3 parts, diethylether, 1 part. Three days later this injection was repeated. Ten days after the initial injection they were both given radio-goldthiosulphate by i-v route. Five days subsequently one of the rabbits was sacrificed after first being perfused with N-saline as previously described. The rabbits had not been walking with the injected limb since 24 hours following the initial treatment. The joint appeared swollen to twice its normal size and was tender and hot to the touch. On autopsy the synovia showed proliferation to a moderate degree; the articular surfaces were dull and roughened and sterile abscesses were present in the muscle mass both above and below the joint. Activity of the pathological tissues were significantly higher than the control site.

Table 5

Gold Concentration in Joint Structures of Normals and Rabbits with Chemical Arthritis

	Rabbit No. 1			Rabbit No. 2		
	Counts	Activity per g. tissue in % of kidney	% of total injected/g. tissue	Counts	Activity per g. tissue in % of kidney	% of total injected/g. tissue
Articular Normal Cortex	1415	10.7	.05	180	24.7	.13
Articular Path. Cortex	2920	19.3	.085	260	34.9	.19
Normal Synovia	700	16.2	.074	155	20.9	.16
Path. Synovia	4325	57.6	.255	-	-	Lost
Normal Tendon	270	6.3	.028	32	4.3	.023
Path. Tendon	1180	28..	.124	385	51.5	.275

1173161

Archives and Records Office
Records Series Title DR. CORNELIUS TOBIAS' PAPERS
Accession No. 434-89-0109
File Code No. 10-08-068
Carton No. 22 / 88
Folder No. 50 - MACELLE FOUNDATION
Notes
Found By P. HALL
Dates
COPY

These results even though they definitely cannot be compared to a rheumatic joint in a human, do show the response of the knee joint to an inflammatory process and its effect on gold concentration. As mentioned in the section on blood, we are working at the present time on the question of what component of the blood concentrates the gold. We have some evidence that the white cells may be responsible. The above data tends to support this, for in the presence of inflammation the cellular response of the body would accumulate large masses of phagocytes at the area giving the increased activity shown above.

Human Experimentation

Through the cooperation of Professor Joseph Kerr and Doctor Hans Waine it was possible for us to start some gold distribution studies on arthritis patients. To this time we have only administered radio-gold to one human, but we hope that this will be repeated in the near future.

The patient selected was a 57 year old white female with rheumatoid arthritis of a moderately advanced stage and of approximately ten years duration. Painful motion was present in both knees with only a small reduction in motion. Patient had never received chrysotherapy. She was given 1010 u.c. of radio-gold as gold-sodiumthiosulphate, representing 2.5 mg. of gold. Two cc. blood samples were withdrawn at 30 and 60 minutes and then hourly for eight hours. Pooled daily urine and stool samples were taken for two days. Twenty-four hours after administration Dr. Verne Inman biopsied her left knee taking the following specimens: skin: superficial fascia and fat, deep fascia and fat, synovial fluid, synovial membrane and muscle. The first day urine sample was lost during processing. Data are contained in Table 6.

1173162

Records Series Title DR. CORNELIUS TOBIAS' PAPERS
Accession No. 434-89-0108
File Code No. 10-08-069
Carton No. 22/88
Folder No. 50 - MARCH FOUNDATION
Notes
Found By R. HALL
Dates
COPY

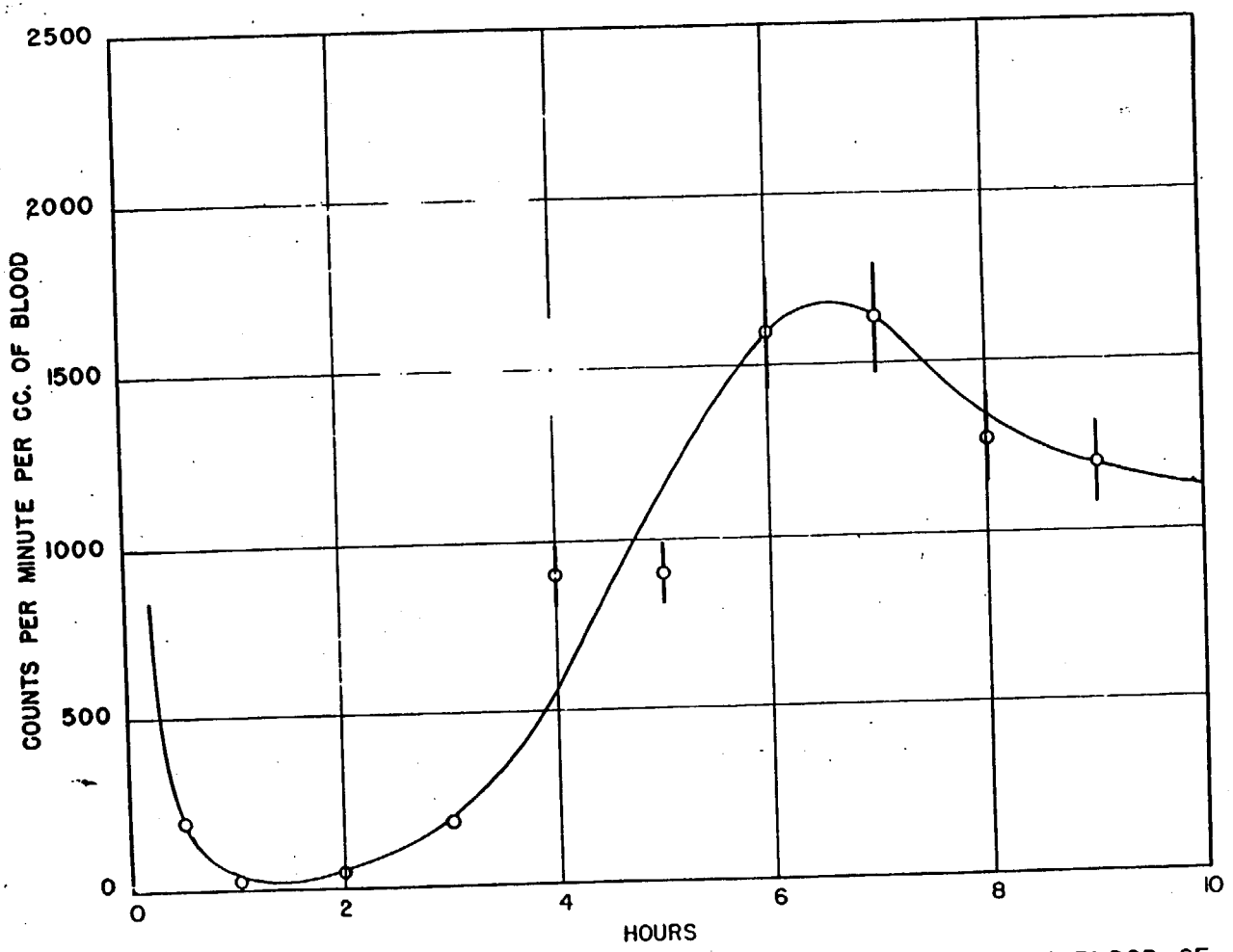

CONCENTRATION OF GOLD (Au^{198}) (AS THIOSULFATE) IN VENOUS BLOOD OF RHEUMATOID ARTHRITIS PATIENT AS FUNCTION OF TIME AFTER I. V. AD-

1173163

Records Series Title DR. CORNELIUS TOBIAS' PAPERS
Accession No. 434-89-0108
File Code No. 10-08-065
Carton No. 22 / 88
Folder No. 50 - MACKLIN FOUNDATION
Notes
Found By P. HALL
Dates
COPY

Table 6

Gold Distribution in Rheumatoid Arthritis Patient

Biopsies 24 hours after intraveneous injection of 1 mc Au^{198} as Aurothiosulphate

	Radioactivity per g tissue	
	Counts/min	% of total activity injected
Synovia	3950	.014
Synovial fluid	1205	.0094
Muscle	355	.0013
Sup. fascia	100	.000366
Deep fascia	163	.000596
Skin	210	.00077
	Total amount excreted	
2nd day urine*	685,410	2.51
1st day feces	22,980	.084
2nd day feces	87,555	.32

*1st day urine lost in process

Of the tissues taken, synovial membrane is by far the most active with the synovial fluid next in activity. This shows very clearly that in humans afflicted with rheumatoid arthritis, synovial membrane is at least somewhat of a concentrator of gold. The results of the blood samples are interesting in that they demonstrate the same phenomena seen in the experimental animals used.

From the same patient hourly blood samples were taken following i.v. injection of the radioactive gold. The resulting data are plotted in function of time in diagram 4. The dip in the curve is quite striking, even more so than in the animal experiments reported above. When blood samples from a normal young (24 year old) subject were taken only a small dip could be demonstrated.

<u>Summary</u>

Distribution studies of radioactive gold were continued and refined in rabbit, mice, dog, and man. It appears that animals with artificially produced chemical inflammation retain more of the gold than normal ones. Much of the gold

Records Series Title DR. CORNELIUS TOBIAS'S PAPERS
Accession No. 434-89-0108
File Code No. 10-08-069
Carton No. 22/99
Folder No. 50 - MARKLE FOUNDATION
Notes
Found By P. HALL
Dates
COPY

is probably taken up in the phagocytes, especially at the site of inflammation. Here the concentration may be 5 to 10 times normal. Synovial membrane and fluid had a high concentration of gold in a rheumatoid arthritis patient. Differential uptake of gold in the synovial membrane of the knee joint has been demonstrated by radioautographic technique. Following injection of gold sodium thiosulphate, the gold content of blood rapidly decreases during the first 1-3 hours; it then increases again reaching a maximum at 3-6 hours. The work is being continued.

1173165

Records Series Title DR. CORNELIUS TOBIAS' PAPERS
Accession No. 434-89-0108
File Code No. 10-08-068
Carton No. 22 / 88
Folder No. 50 - MACELLE FOUNDATION
Notes
Found By C. HALL
Dates
COPY

BIBLIOGRAPHY

1. Bloch, W., O. Buchanon and R. Freyberg. Journ. Pharm. and Exptl. Therapy 73, 200 (1941) : Ibid 76, 355 (1942) : Ibid 82, 391 (1944) : Ibid 83, 275 (1945)

2. Bloch, W. and O Buchanon. J. Biochem. 136, 379 (1940).

3. Köppenhoffer. Deutsche med. Wchnsche 62, 1011, 1936.

4. L.DeWitt, Sid Cadwell and Gladys Leauell. Hour. Pharm. and Exptl. Therapy. 11, 351 (1918).

5. Ely, J.O. Jour. of the Franklin Inst. 230, 125 (1940).

6. Axelrod, D. Anatomical Record 98, 19 (1947)

1173166