[redacted]

1676

February 21, 1961

File No: XMC-1271, 3.2
T-No: 17239A
Project No: 13.670.00
Completed: 12-20-60

9/29/98 RBCrane
10/13/98 WC Rayne
Declassify

TO: DISTRIBUTION TCG-NNT-1; TCG-SAFF-1

Re: Environmental Overtests of Four Each XMC-1271 Thermal Battery Packages, Manufactured by Bendix Corporation

Object of Test

This test was performed to obtain additional information as to the reliability and operational limits of the XMC-1271 Battery Package.

Authorization for Test

This test was requested by Division 7146 in a Work Order Authorization dated 9-7-60. Mr. Milo Navratil was the consultant. The material for test was received 9-19-60.

Summary

Four units were subjected to a vibration overtest. Three of these units were subjected to an overtest in linear acceleration and to mechanical shock per TR-311075. Nondestructive tests were performed initially and after each environment. All of the units were activated at -65°F and 100K feet altitude. All of the test results obtained were within the specifications.

RECEIVED FEB 23 1961 CENTRAL RECORD FILE

Functional Measurements and Methods

The units were nondestructively tested with a PT-596 tester per the instructions of IMI-310351.

The units were activated with a PT-695 tester per the instructions of IMI-310351.

Procedure and Results

Six units were received from the consultant for testing. All of these units were subjected to initial nondestructive tests. Units AA-X627-HO, and AA-X625-HO were not subjected to any environments during this test and will be environmentally tested at a later date. The results of the initial nondestructive tests are listed in Table 1 and are all within the limits of the IMI.

Units AA-X631-HO, AA-X632-HO, AA-X629-HO, and AA-X635-HO were subjected to a vibration overtest. This test consisted of a resonance survey, one hour of resonance vibration, and one fifteen-minute cycle. The input accelerations during vibration were .240 inches double displacement from 10 to 15 cps, .160 inches D.D. from 15 to 25 cps, .120 inches D.D. from

SANDIA SYSTEMATIC DECLASSIFICATION REVIEW
DOWNGRADING OR DECLASSIFICATION STAMP

CLASSIFICATION CHANGED TO: U	AUTHORITY: W C Rayne
Emelda Selph 10/15/98 PERSON CHANGING MARKING & DATE	RECORD ID: 99SW0090
PERSON VERIFYING MARKING & DATE	DATED: 10/13/98

FILE No. MC-1271 3-2

[redacted]

UNCLASSIFIED

60 to 74 cps, and 20g from 74 to 2000 cps. Each of the units was nondestructively tested after vibration. These test results are listed in Table I and are all within the limits of the IMI. The results of the resonant surveys are plotted graphically for each unit in terms of response ratio versus frequency in Figures 6 through 17.

Unit AA-X631-H0 was stabilized at -65°F and activated at a simulated altitude of 100K foot. The other three units were subjected to linear acceleration, mechanical shock, and then activated at temperature and altitude. The levels of linear acceleration were 125g in the F and F' directions and 70g in the G, G', H and H' directions. The mechanical shock test was performed per paragraph 2.2.3.3 of TR-311073 issue 3. The sketches in Figure 5 show the directions of acceleration and shock and the axes of vibration. The location of the accelerometer during the vibration test is shown in Figure 18.

Nondestructive tests were performed after linear acceleration and mechanical shock. The results of these tests are listed in Table I and are all within the limits of the IMI-310351.

The results of the activation tests are listed in Table 2 and are plotted graphically in Figures 1, 2, 3, and 4. Unit AA-X631-H0 had a high voltage breakdown after 60 seconds of activated life; visual inspection showed that this occurred due to frost between the test cable and the battery connector because the battery connector was bent to the extent that the two connectors could not mate properly. Unit AA-X629-H0 had a peak voltage of 2050 volts which was about 300 volts below the other units. All four of the units met the specifications of paragraph 2.2.2.1 of TR-311075, issue B.

Unit AA-X629-H0 was x-rayed after activation in an effort to determine if all of the cells in the package had activated. The x-ray films indicated that all five of the cells were activated. The unit still met the firing specifications despite the lower peak voltage.

The results of the activation tests that are tabulated in Table 2 do not agree with the graphs in Figures 1 through 4. The tabulated data was read from the clocks and recorder voltage indicator on the PT-695 tester. The graphs were plotted from records obtained from a Brush Recorder incorporated in the tester. The recorder was calibrated for voltage and the rise time and activated life clocks were adjusted to operate on 1700 volts on the recorder just prior to the activation tests. While the two sets of data do not agree, both sets are within the specifications. If the chart speed of the recorder varies, this could account for the differences between the two sets of data.

Roger L. Kurtz
ROGER L. KURTZ - 7321-3

V. E. Kemp
V. E. KEMP - 7321-5

RLK:7321-3:mep

Encl: Tables 1 & 2
Figures 1 thru 18

UNCLASSIFIED

[redacted]

February 21, 1961

T-17239A

Distribution
W. E. Treibel, 7146
Attn: M. J. Navratil
D. M. Bruce, 7182
Attn: Leon Wilson
J. K. Wiesen, 1442
D. S. Dressen, 7522
E. H. Copeland, 7321
R. K. Smelzer, 3421-3

UNCLASSIFIED

[redacted]

UNCLASSIFIED TABLE [redacted]

									SGCIB	J2B			HAVIR-ONMENT
AA-X627-HO	9.5	3.10	2.37	2.70	2.70	.90	.20		.037	.055	.050		NEW
AA-X631-HO	9.4	3.09	2.36	2.70	2.70	.89	.25		.037	.054	.050		"
AA-X629-HO	9.7	3.09	2.36	2.72	2.70	.90	.25		.037	.057	.050		"
AA-X635-HO	9.6	3.09	2.36	2.72	2.70	.90	.30		.037	.055	.052		"
AA-X625-HO	9.5	3.09	2.36	2.71	2.70	.90	.25		.037	.054	.050		"
AA-X632-HO	9.5	3.09	2.36	2.70	2.70	.90	.23		.037	.052	.049		"
	AFTER 20G VIBRATION												
AA-X631-HO	9.6	3.09	2.38	2.71	2.70	.90	.22		.038	.054	.050		20G VIB
AA-X632-HO	9.4	3.10	2.39	2.72	2.70	.90	.20		.037	.054	.050		20G VIB
AA-X629-HO	9.6	3.09	2.37	2.72	2.72	.90	.22		.037	.055	.051		20G VIB
AA-X635-HO	9.6	3.11	2.40	2.77	2.76	.89	.29		.038	.056	.050		20G VIB
	AFTER ACCELERATION												
AA-X632-HO	9.4	3.09	2.35	2.71	2.70	.89	.25		.037	.054	.050		ACCEL
AA-X629-HO	9.7	3.10	2.39	2.75	2.72	.90	.26		.037	.055	.050		"
AA-X635-HO	9.5	3.12	2.40	2.79	2.78	.90	.29		.038	.054	.050		"
	AFTER MECHANICAL SHOCK												
AA-X632-HO	9.4	3.09	2.35	2.69	2.65	.89	.21		.037	.054	.050		SHOCK
AA-X629-HO	9.7	3.11	2.40	2.75	2.76	.89	.21		.038	.055	.052		"
AA-X635-HO	9.6	3.20	2.45	2.73	2.82	.90	.30		.037	.056	.053		"

UNCLASSIFIED

[redacted]

1679

UNCLASSIFIED TABLE 2 T-17237

[redacted]

MC-1271 ACTIVATION RESULTS

SER. NO.	TEMP.	ALT. IN K FT.	RISE TO 1700 V SEC.	PEAK VOLTS	ACT. LIFE TO 1700 V	VOLTS AT 15 SEC	VOLTS AT 30 SEC	VOLTS AT 60 SEC	VOLTS AT 90 SEC	VOLTS AT 120 SEC	VOLTS AT 150 SEC	VOLTS AT 180 SEC	VOLTS AT 210 SEC
AA X631-HO	-65	100	.85	2400	84.3	2350	2400	2390	CONNECTOR BROKE DOWN DUE TO POOR MATING				
AA-X[illegible]	[illegible]	[illegible]	.84	2450	537.4	[illegible]	2450	2430	2400	2330	2290	2250	2190
AA-X629-HO	-65°	100	.94	2050	247.3	[illegible]	[illegible]	1770	[illegible]	1900	1840	[illegible]	1780
AA-X635-HO	-65°	100	.81	2450	53[illegible].5	2430	2450	2420	2390	2320	2290	2220	2200

UNCLASSIFIED

[redacted]

1680

UNCLASSIFIED

[redacted]

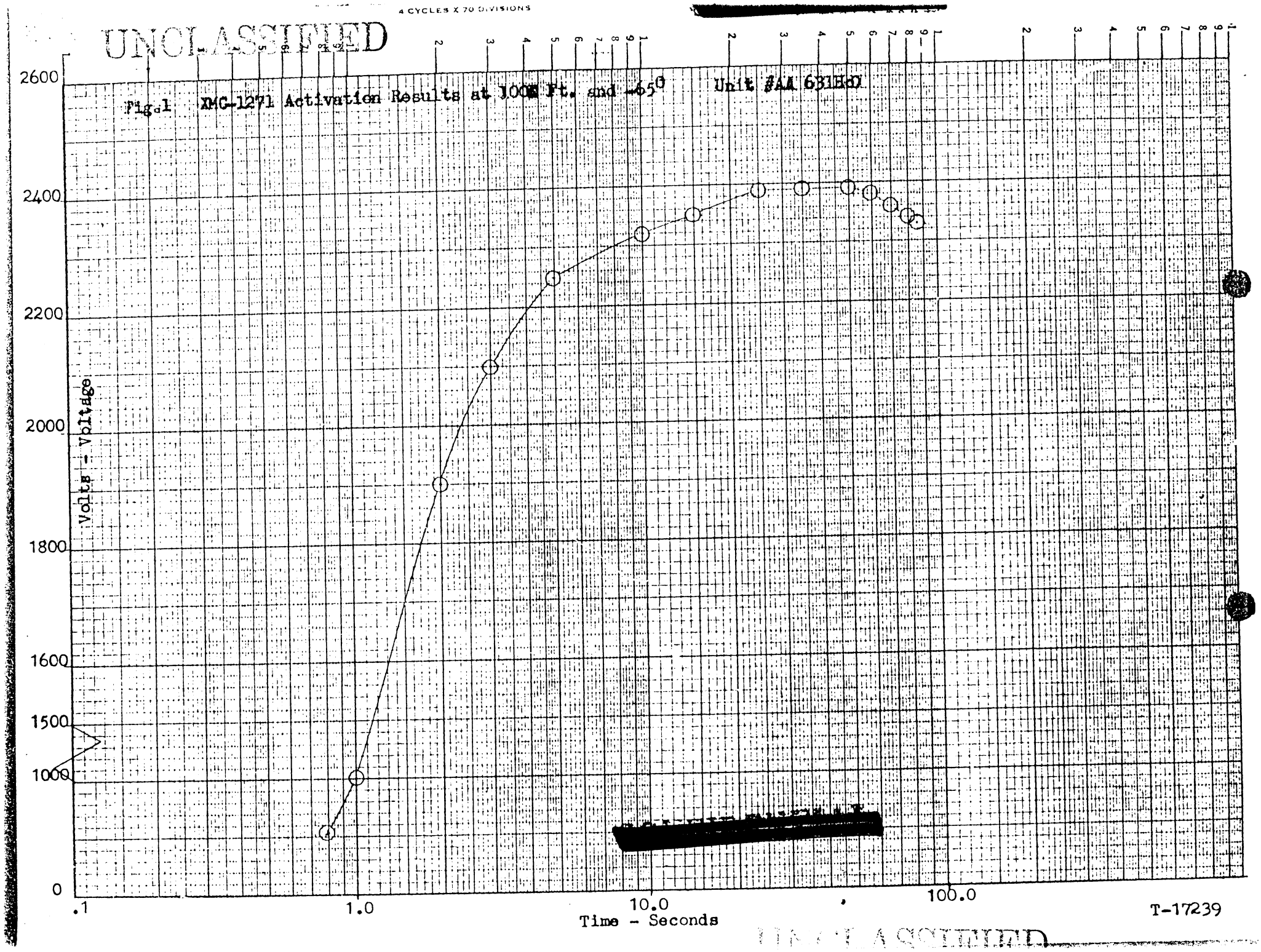

[redacted]

UNCLASSIFIED

K&E KEUFFEL & ESSER CO. MADE IN U.S.A.
4 CYCLES X 70 DIVISIONS

UNCLASSIFIED

[redacted]

Fig. 2 XMG- 1271 Activation Results At -65° and 100K ft Unit # AA 632H0

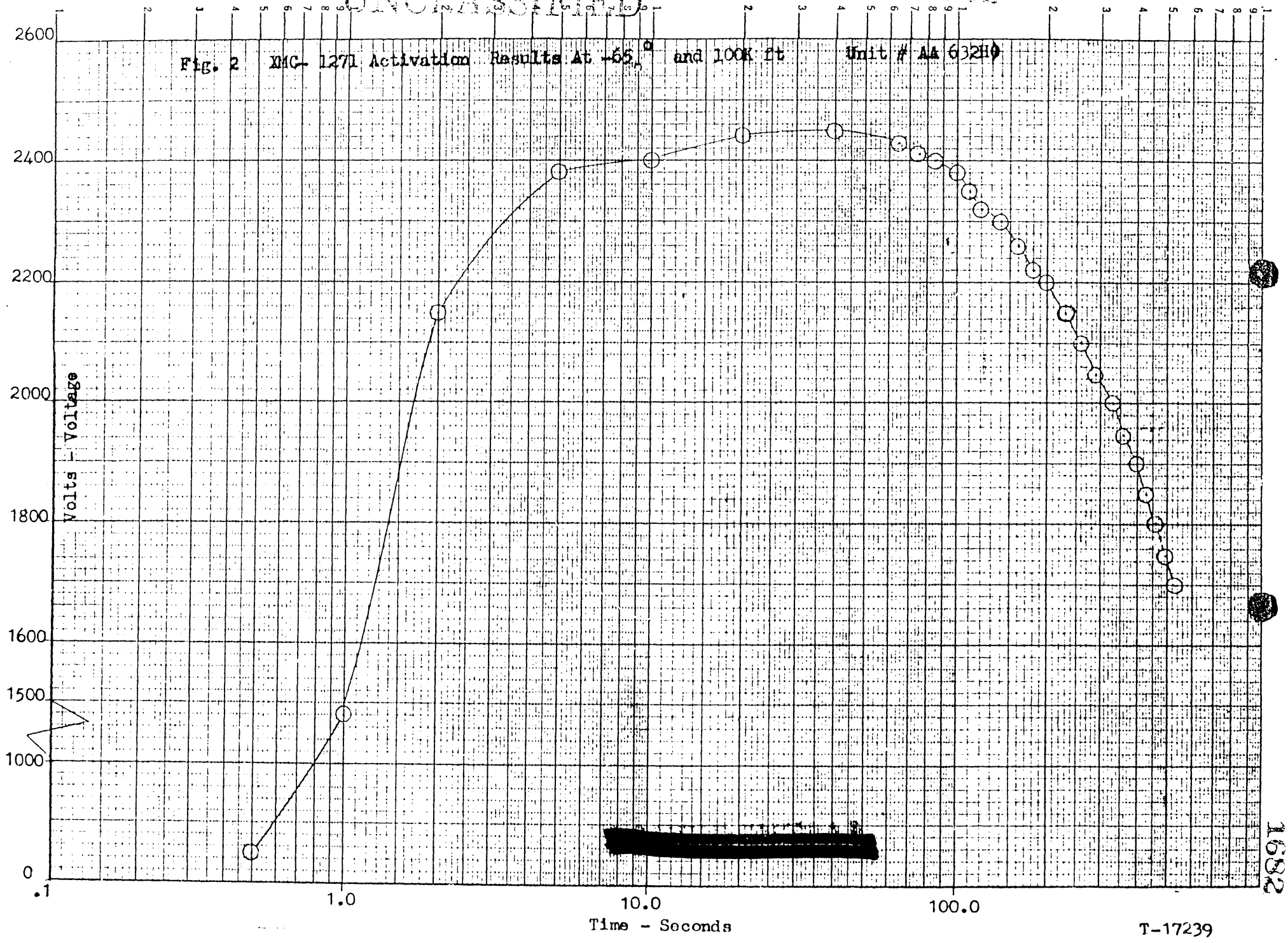

[redacted]

T-17239

K+E SEMI-LOGARITHMIC 359-81
KEUFFEL & ESSER CO. MADE IN U.S.A.
4 CYCLES X 70 DIVISIONS

[redacted]

UNCLASSIFIED

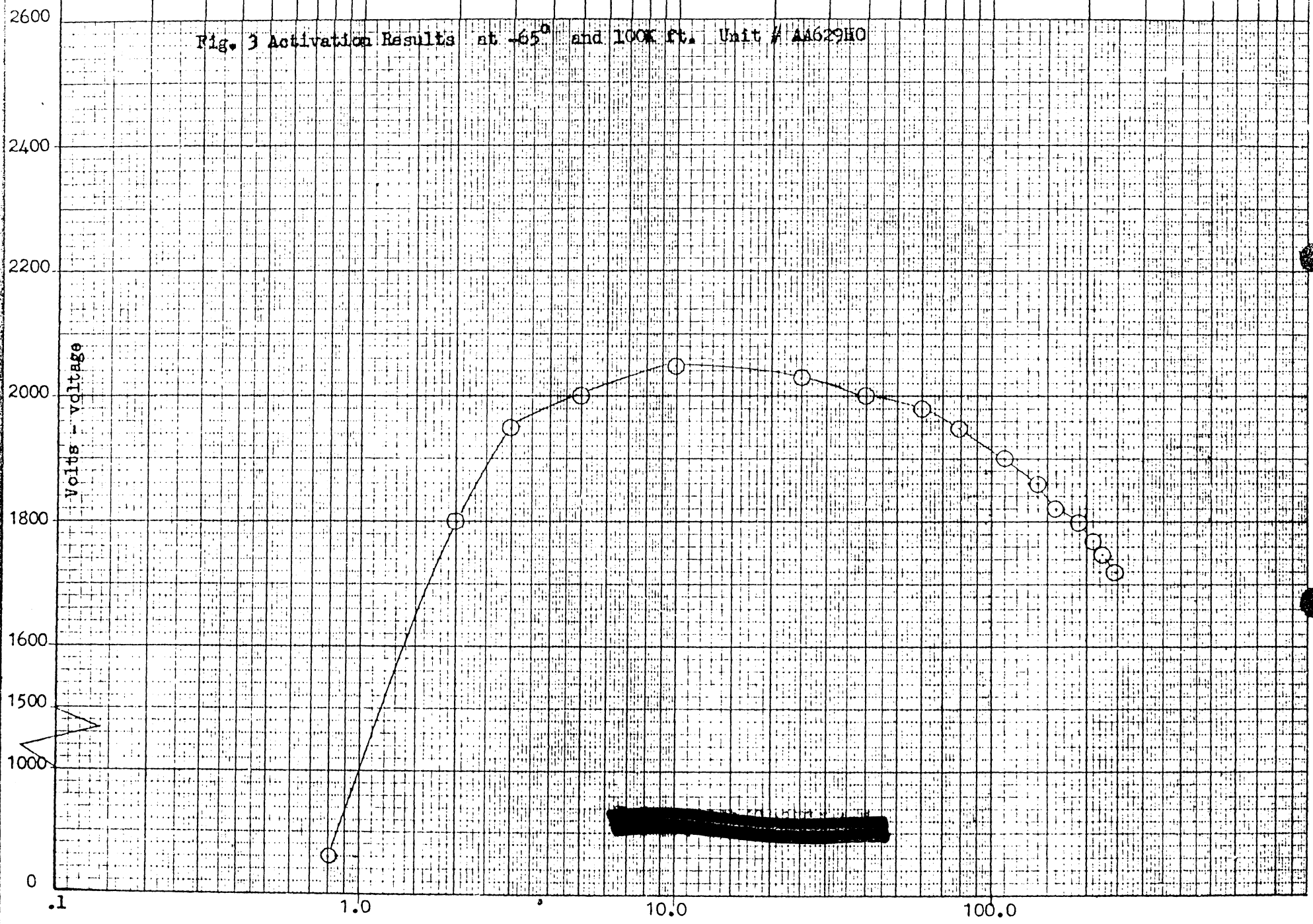

Fig. 3 Activation Results at -65° and 100K ft. Unit # AA629HO

[redacted]

UNCLASSIFIED

T-17239

1683

K+E SEMI-LOGARITHMIC 359-07
KEUFFEL & ESSER CO. MADE IN U.S.A.
4 CYCLES X 70 DIVISIONS

[redacted]

UNCLASSIFIED

Fig. 4 Activation Results at -65° and 100K ft Unit # AA63510

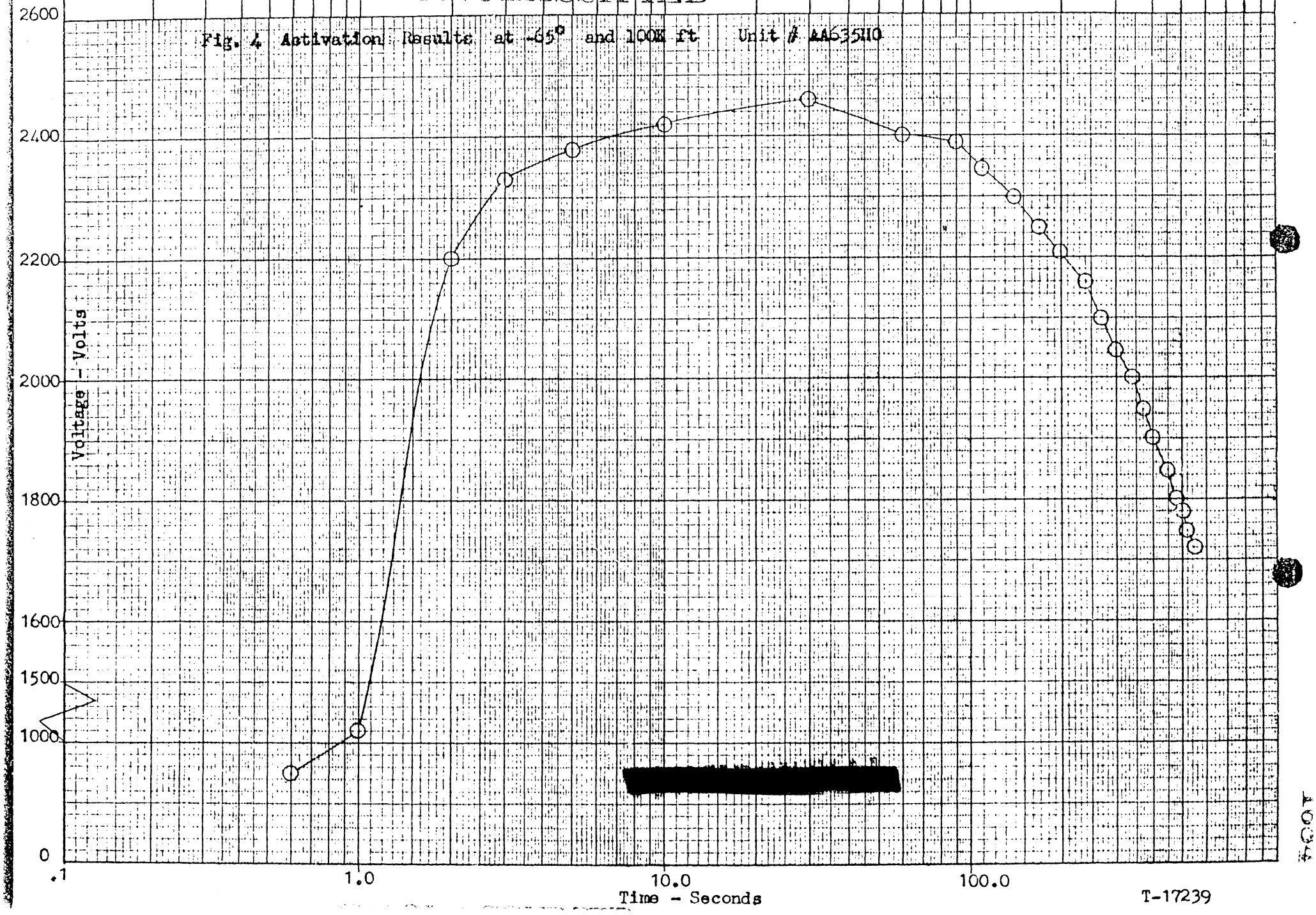

[redacted]

T-17239

1004

[redacted]

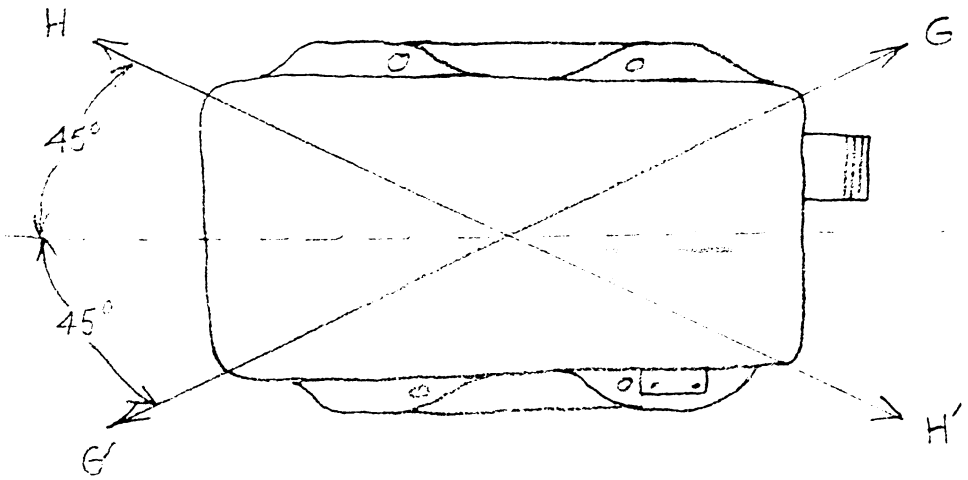

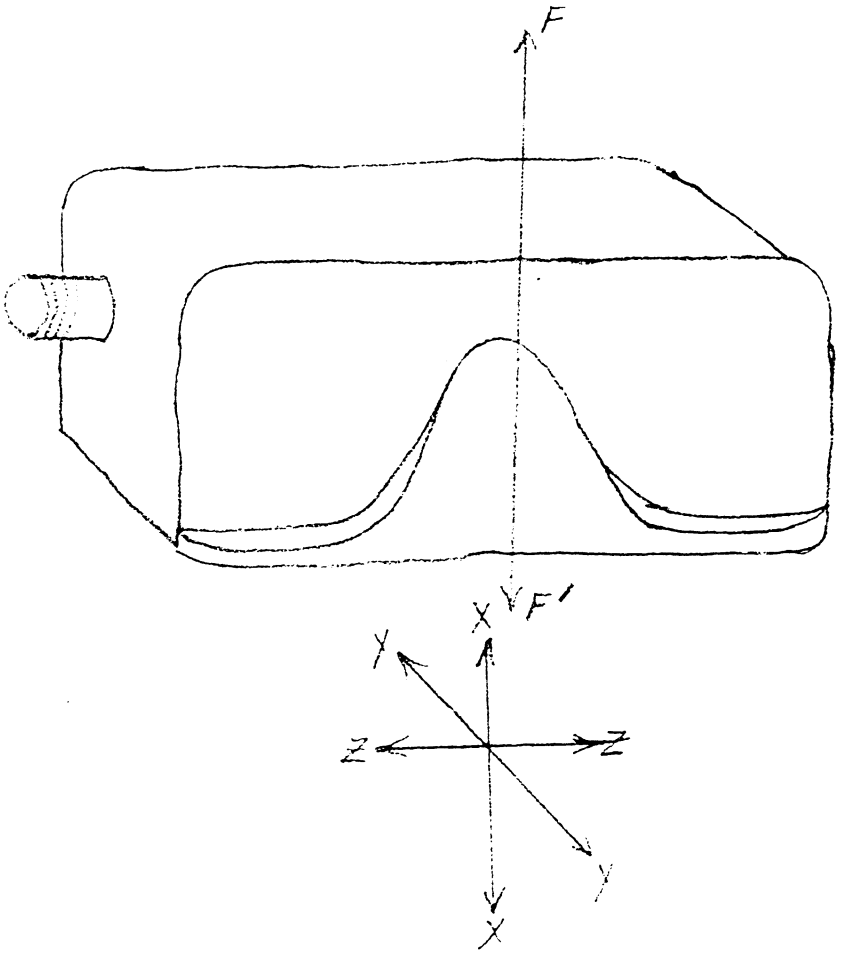

[redacted]

FIG. 5

K+E 10 X 10 TO THE ½ INCH KEUFFEL & ESSER CO 359-11 MADE IN U.S.A.

UNCLASSIFIED

[redacted]

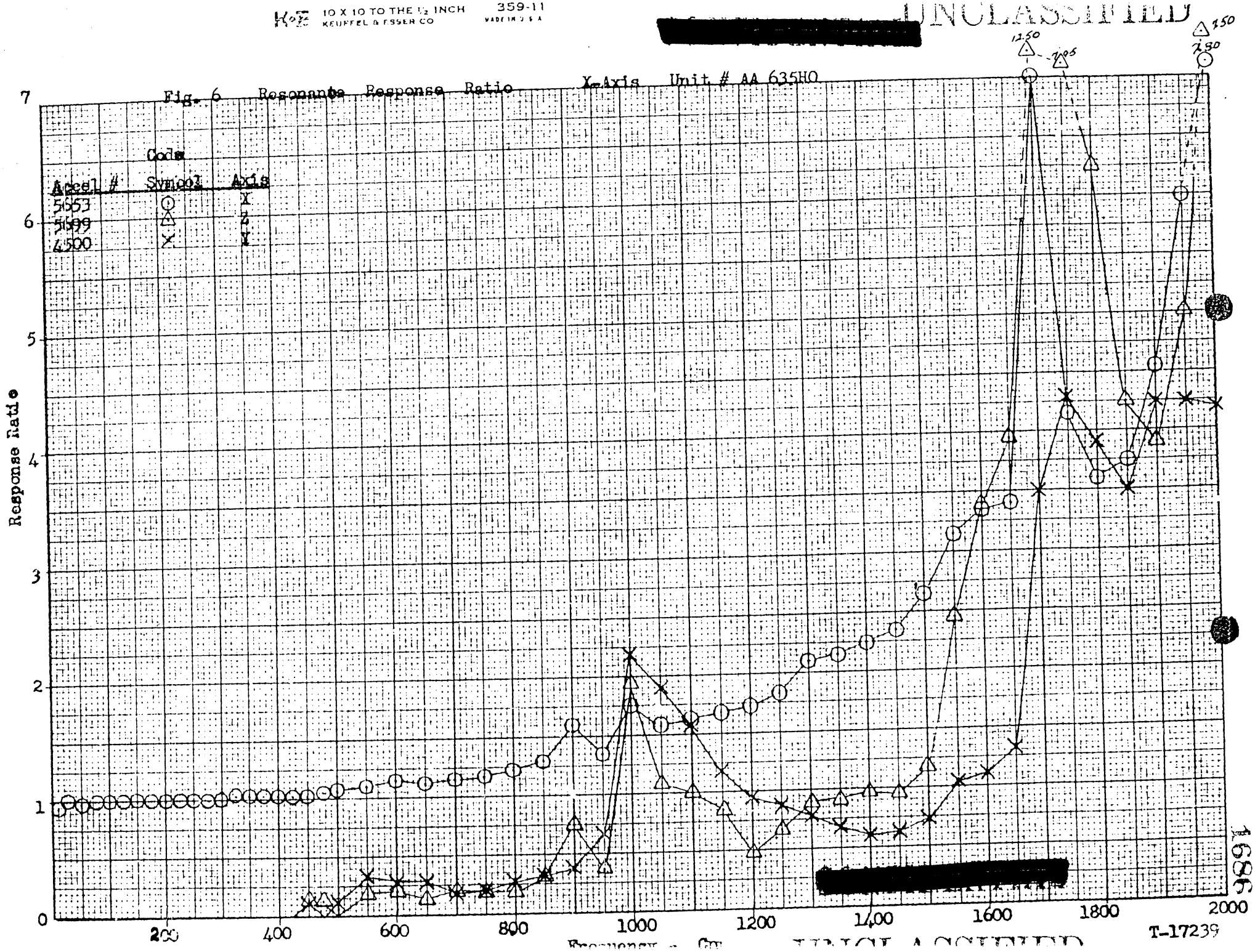

[redacted]

UNCLASSIFIED

T-17239

1686

10 X 10 TO THE ½ INCH 359-11
KEUFFEL & ESSER CO.

[redacted] UNCLASSIFIED

Fig. 7 Resonance Response Ratio Y-Axis Unit # AA-635HO

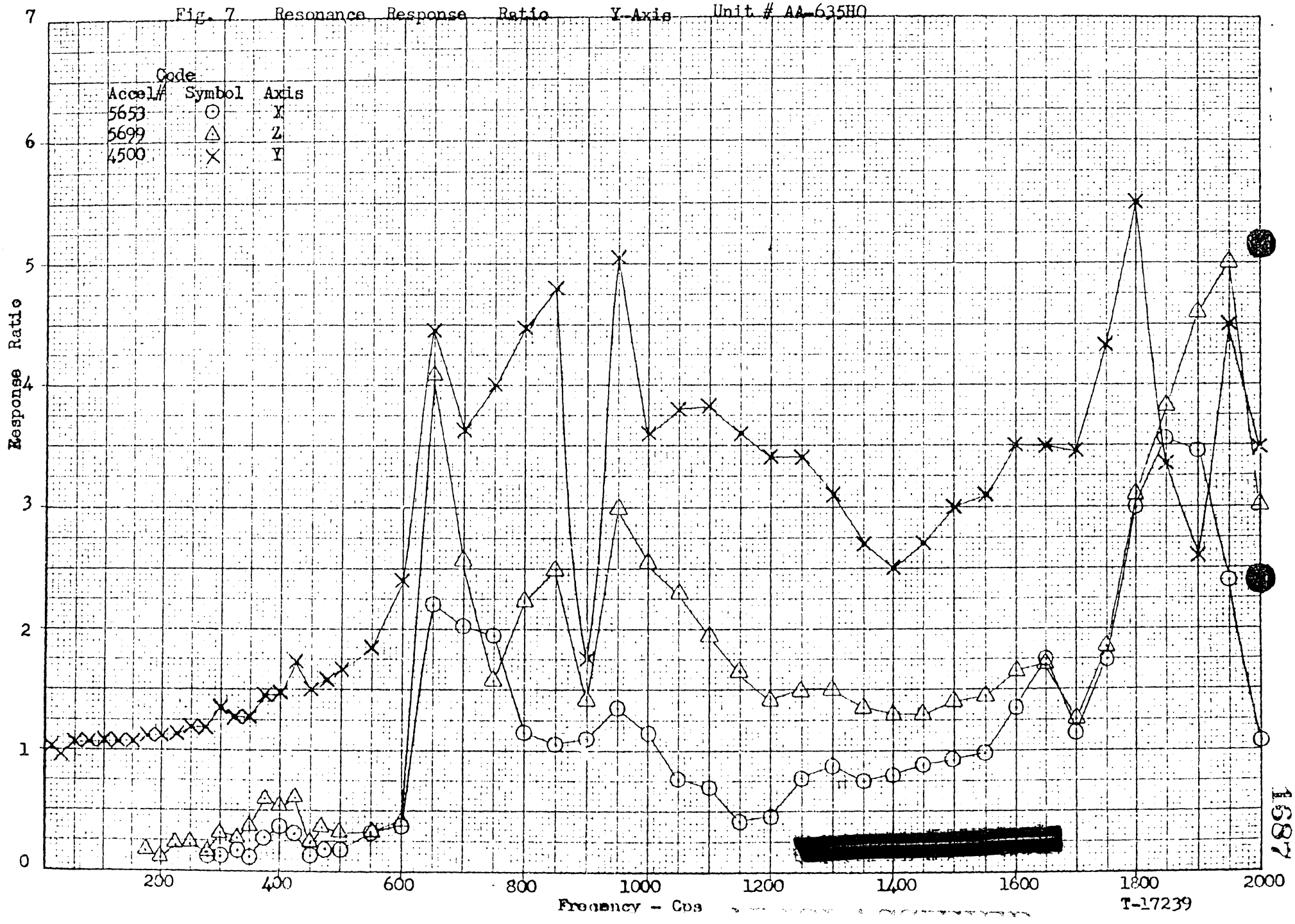

[redacted]

T-17239

1587

K+E 10 X 10 TO THE ½ INCH KEUFFEL & ESSER CO. 359-11 MADE IN U.S.A.

[redacted] UNCLASSIFIED

Fig. 8 Resonance Response Ratio Z-Axis Unit# AA-635EO

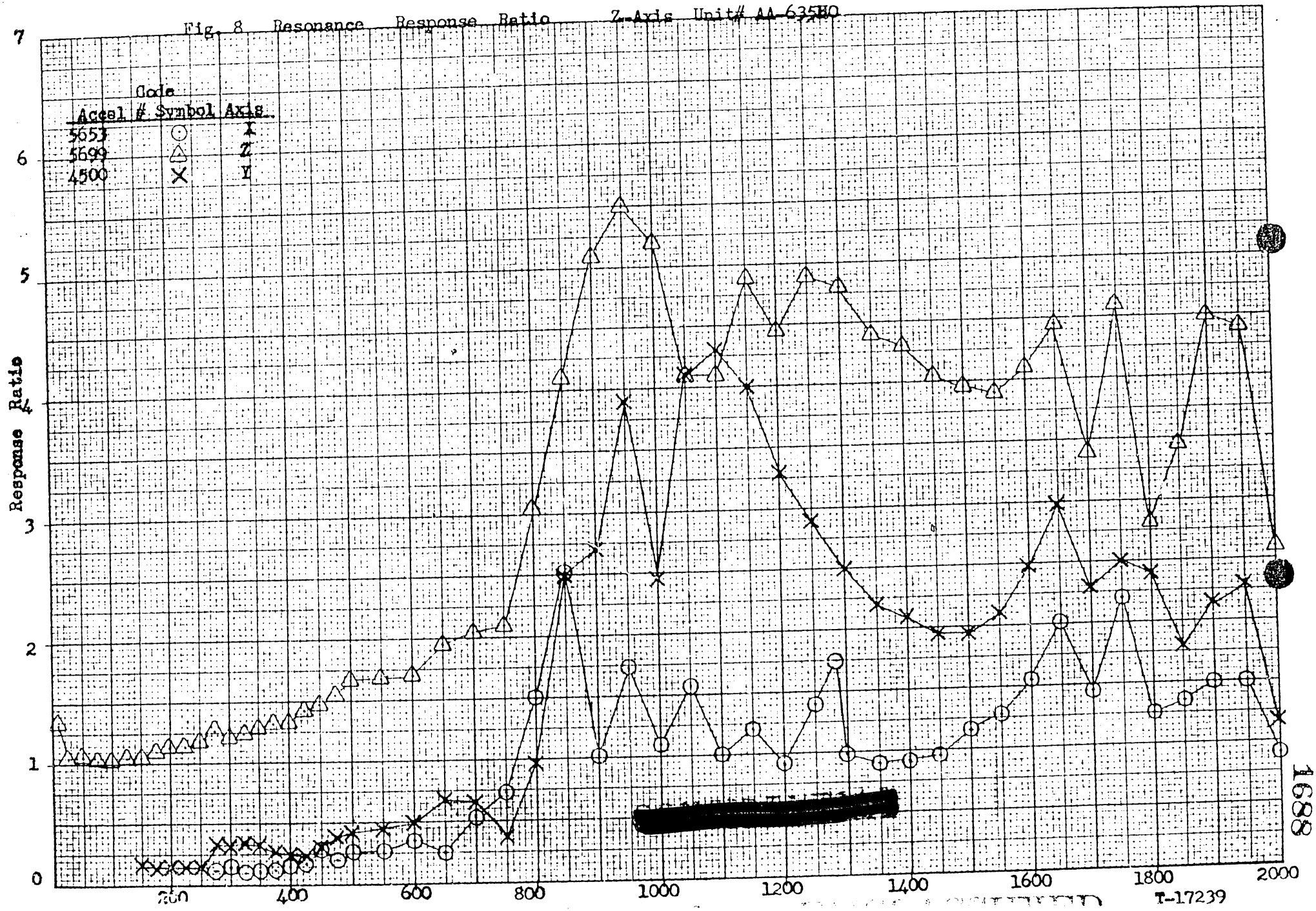

[redacted]

1688

K+E 10 X 10 TO THE 1/2 INCH 359-11

UNCLASSIFIED

[redacted]

Fig. 9 Resonance Response Ratio X-Axis Unit# AA632HO

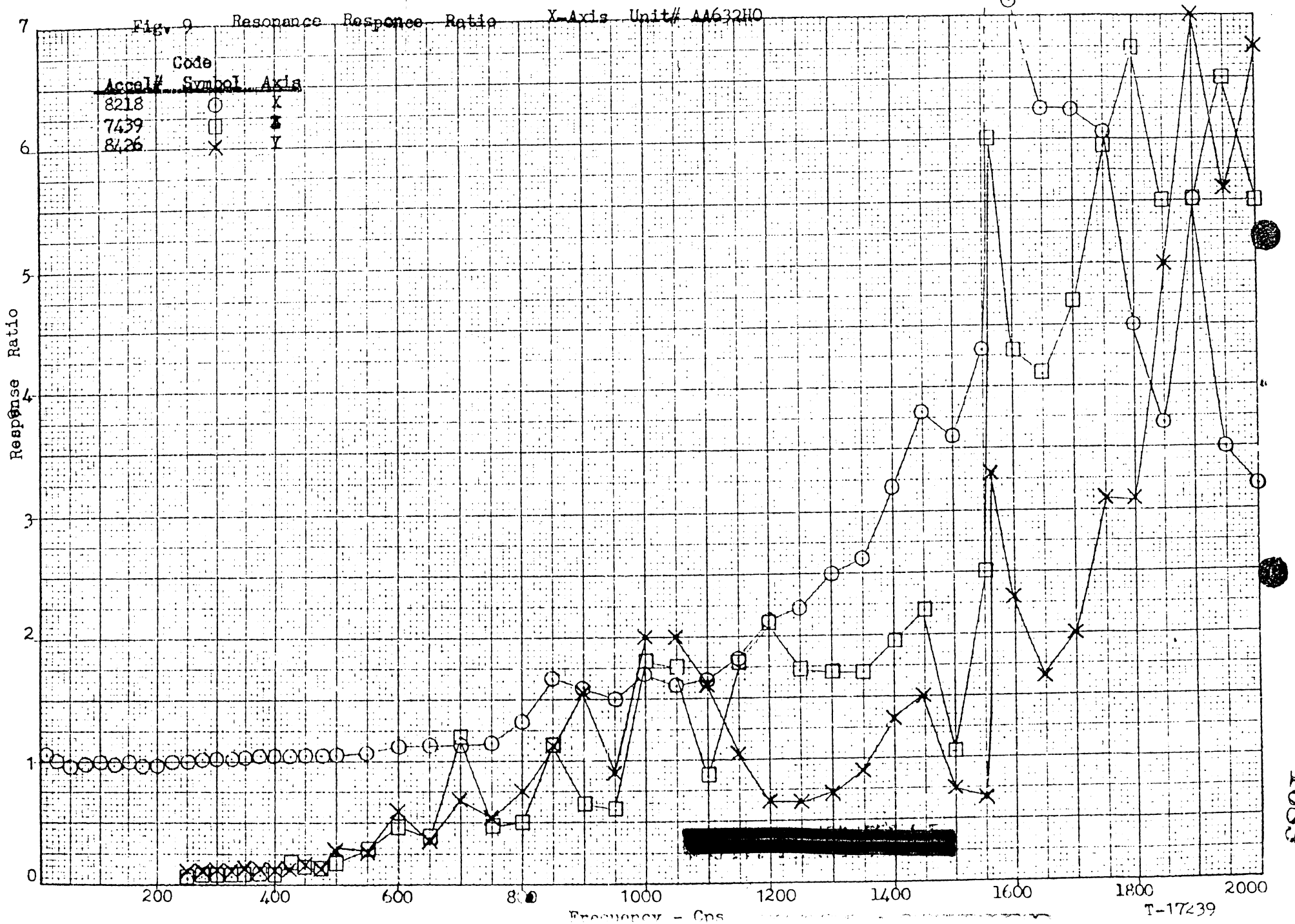

[redacted]

K+E 10 X 10 TO THE ½ INCH 359-11
KEUFFEL & ESSER CO. MADE IN U.S.A.

UNCLASSIFIED [redacted]

Fig. 10 Resonance Response Ratio Y-Axis Unit# AA632H0

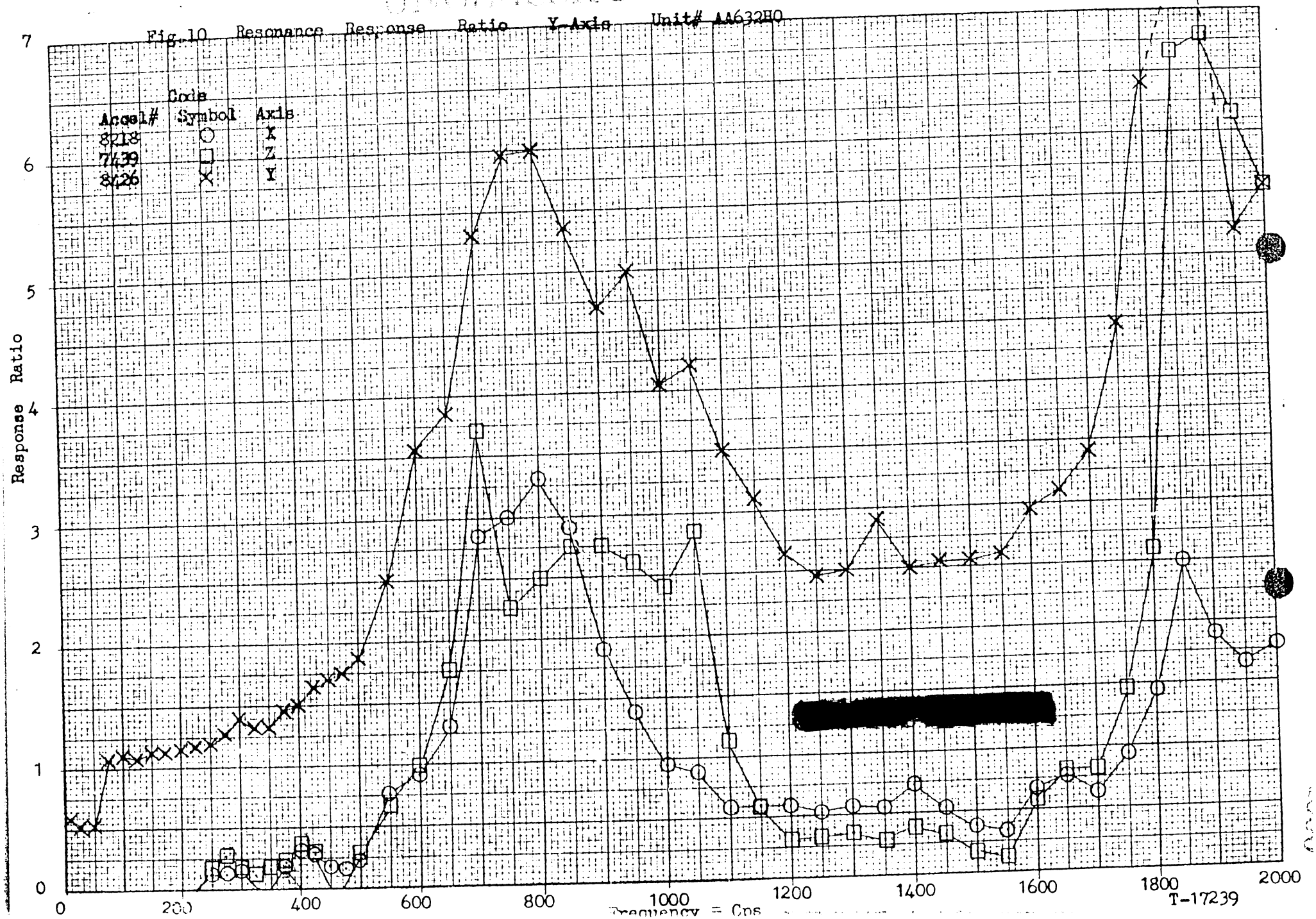

T-17239

K+E 10 X 10 TO THE ½ INCH 359-11
KEUFFEL & ESSER CO.

UNCLASSIFIED

[redacted]

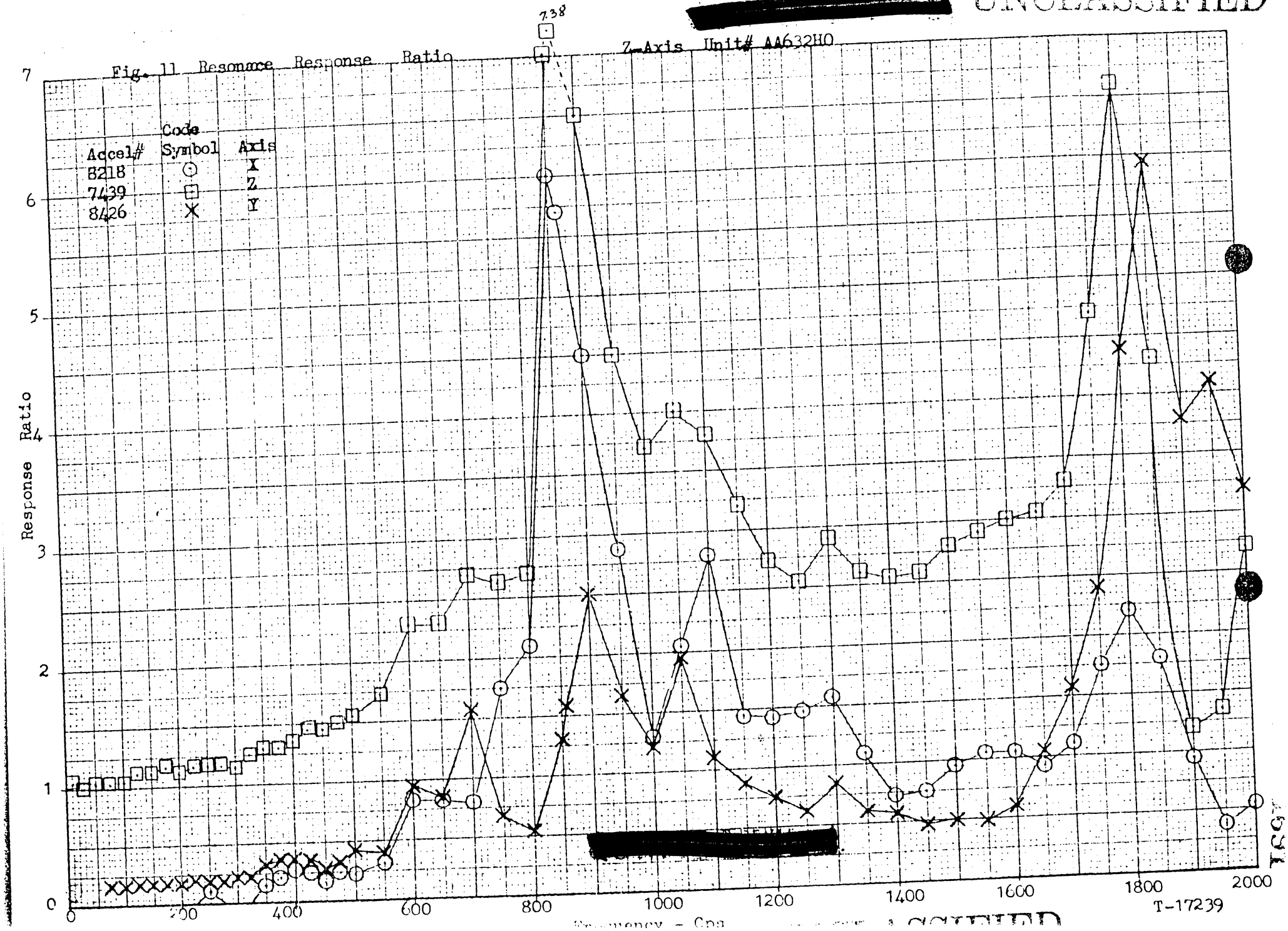

[redacted]

UNCLASSIFIED

K+E 10 X 10 TO THE ½ INCH KEUFFEL & ESSER CO. MADE IN U.S.A.

UNCLASSIFIED [redacted]

Fig. 12 Resonance Response Ratio Unit # AA631HO X-Axis

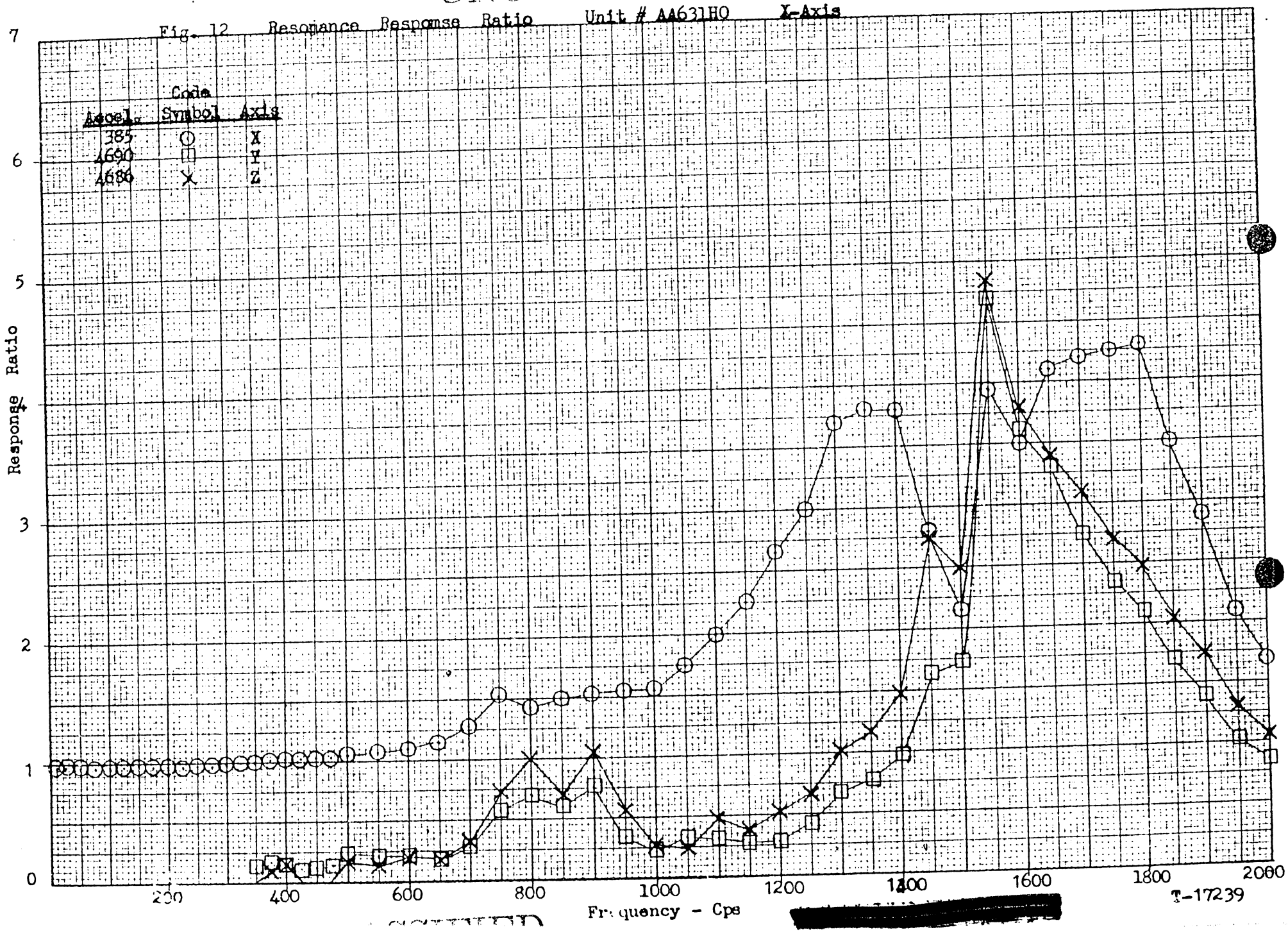

[redacted]

K&E 10 X 10 TO THE ½ INCH 359-11
KEUFFEL & ESSER CO.

UNCLASSIFIED [redacted]

Fig. 13 Resonance Response Ratio Y-Axis Unit # AA631HO

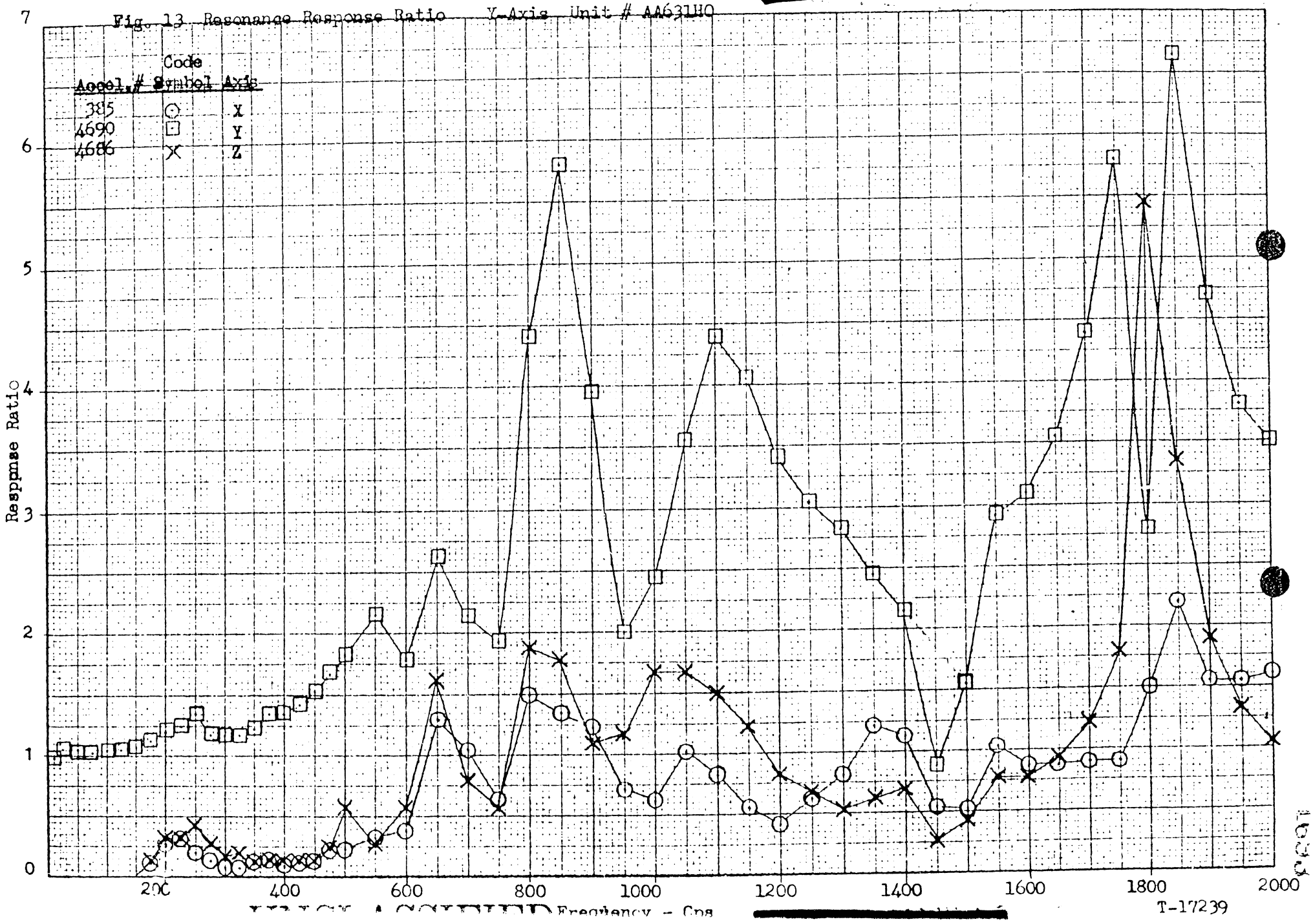

[redacted]

K&E 10 X 10 TO THE ½ INCH KEUFFEL & ESSER CO. 359-11 MADE IN U.S.A.

[redacted]

UNCLASSIFIED

Fig. 14 Resonance Response Ratio Z-Axis Unit # AA631HO

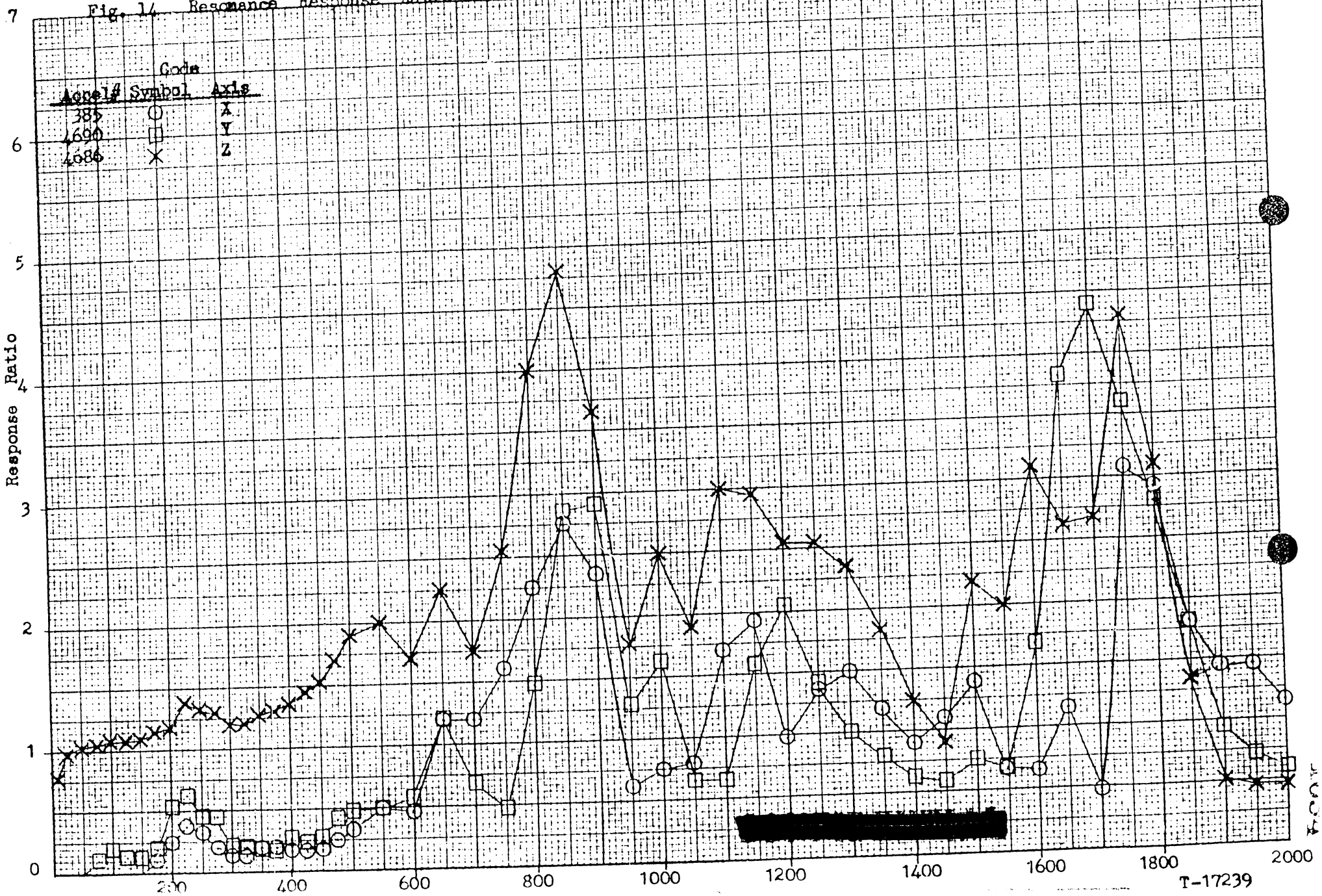

[redacted]

K+E 10 X 10 TO THE 1/2 INCH 359-11 KEUFFEL & ESSER CO.

[redacted]

UNCLASSIFIED

Fig. 15 Resonance Response Ratio L-Axis Unit # AA629H0

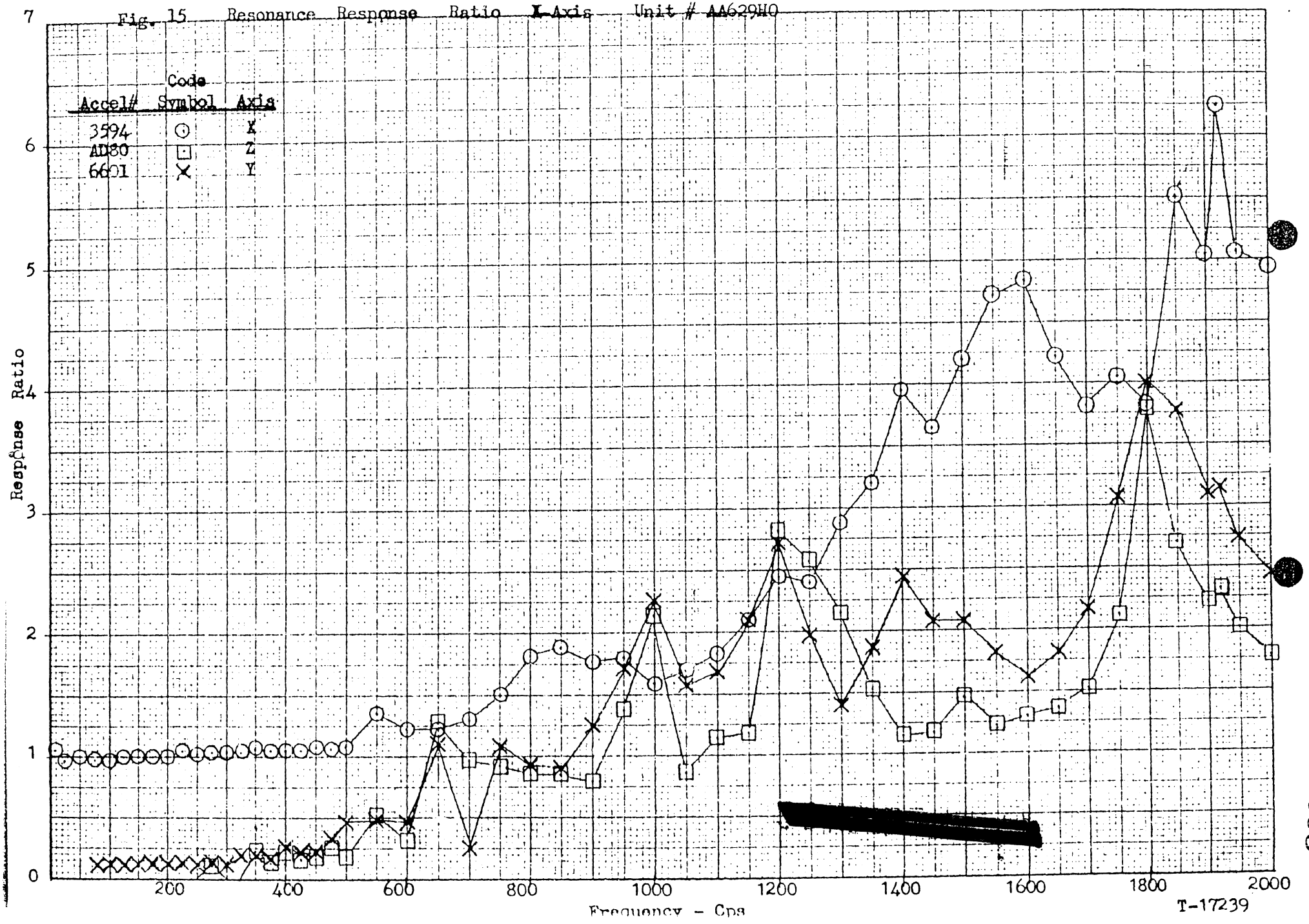

[redacted]

1035

UNCLASSIFIED

[redacted]

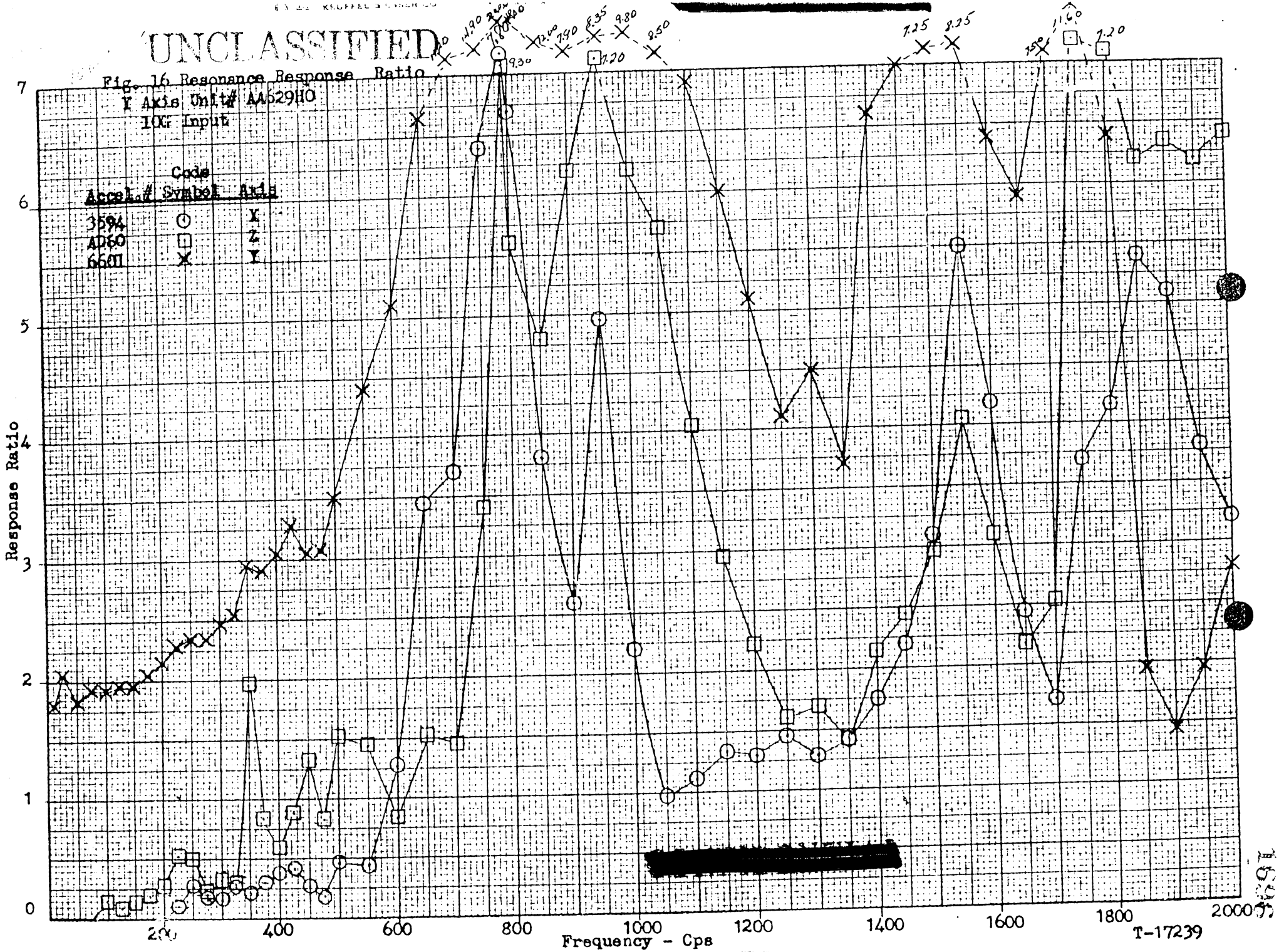

[redacted]

K&E 10 X 10 TO THE ½ INCH KEUFFEL & ESSER CO. 359-11 UNCLASSIFIED [redacted]

Fig. 17 Resonance Response Ratio Z-Axis Unit # AA629HO

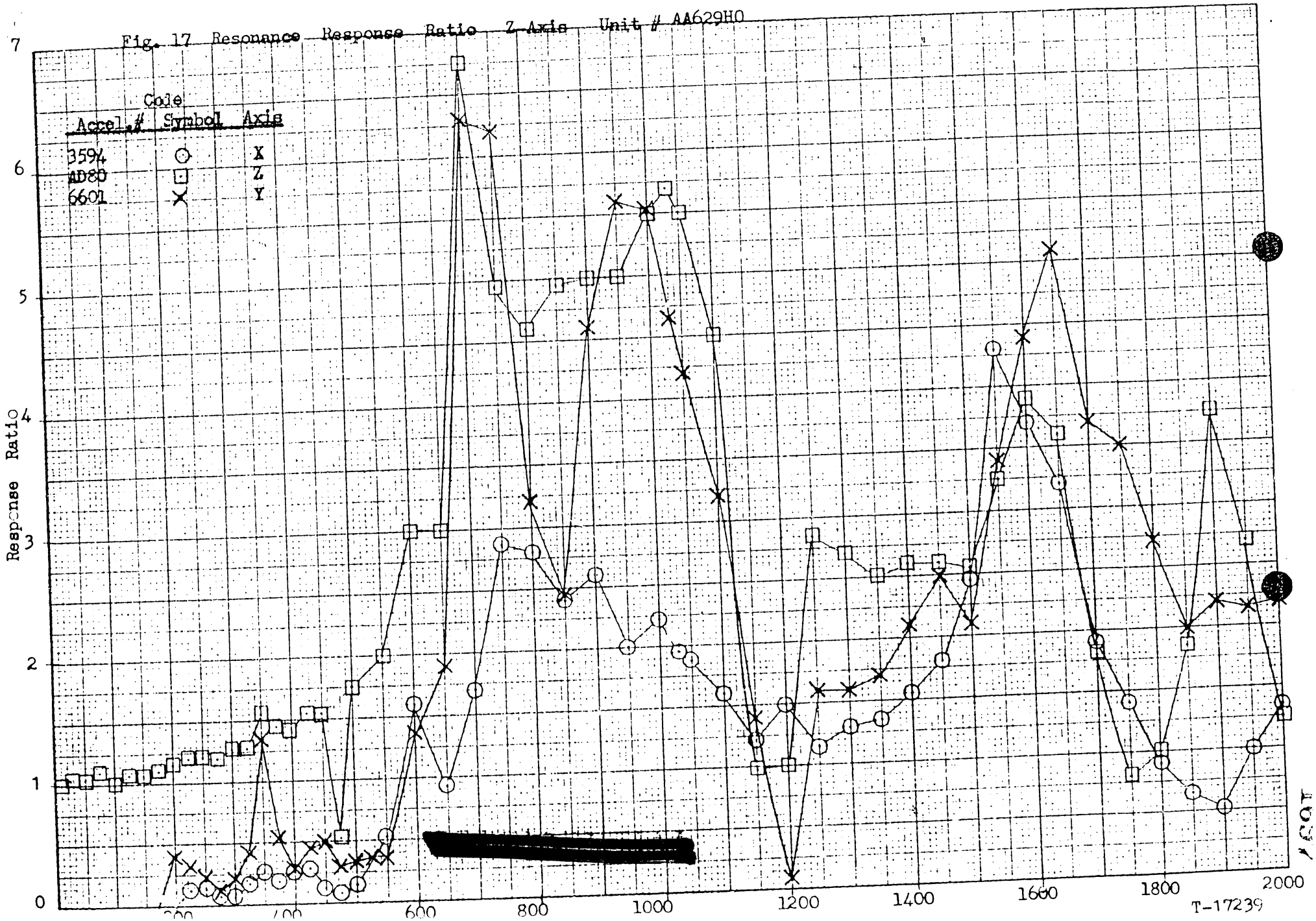

[redacted]

UNCLASSIFIED

FIG. 18
Location of Accelerometers

[redacted]

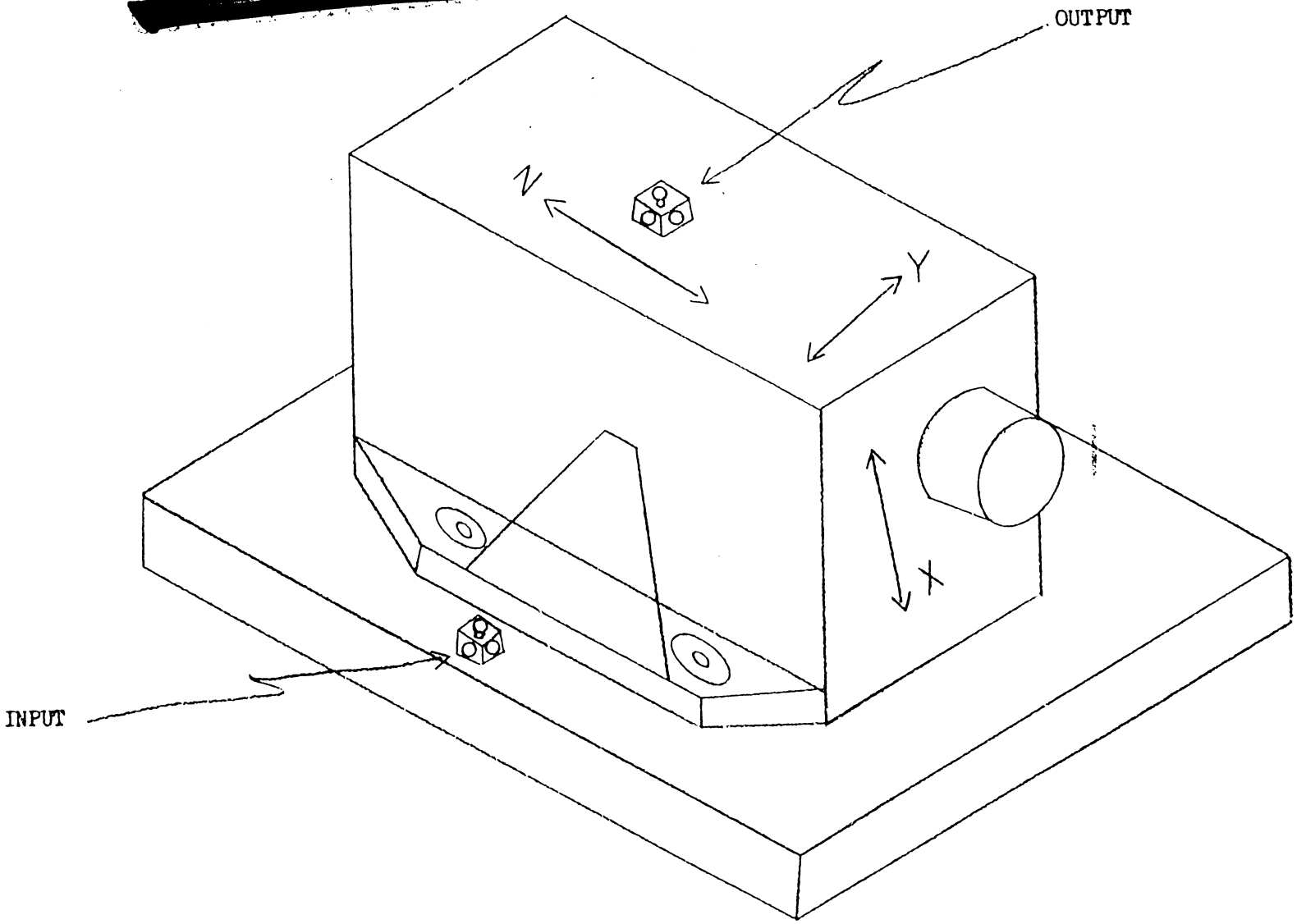

[redacted]