[redacted]

Review Date 9/30/98
Authority ADD
Name Kramer
Review Date 10/06/98
Authority ADD
Name W Layne

Classification U
Contains No DOE
Coordinate With
Contains UCAI NO
Comment
DECLASSIFY

SEP 22 1959
File No: MC-1286, 3.2
Project No. T-16551
Case No. 749.00
Completed: 9-15-59

TCG-NNT-1; TCG-SAFF-1

UNCLASSIFIED

TO: DISTRIBUTION

Re: Vibration Evaluation of Five Development MC-1286 Firing Sets, Fabricated by Division 1263.

Summary

Two units were subjected to one hour of vibration cycling in each of three axes. One unit was subjected to a resonance survey in each of three axes. Two of the units were subjected to one hour of cycling and one hour of vibration at resonance in each of three axes. Functional tests were performed on the units prior to, during, and after the vibration tests. There were no significant changes in the characteristics of the units during the vibration tests. Unit X-0002 showed a malfunction in the continuity checks at the completion of Vibration Test III. The units were x-rayed after vibration. There were no internal changes in the units visible in the x-rays.

Authorization for Test

This test was requested by Organization 1263 in a work order dated 9-1-59. The consultant was D. M. Wilkinson.

Functional Measurements and Methods

The functional tests were performed with a PT-637 Tester per IMI-310305. A Tektronik 535 Oscilloscope and a John Fluke Voltmeter were used in conjunction with the PT-637 Tester. The PT-637 used was Serial No. 2. The John Fluke Voltmeter used was Serial No. S-89720. The 535 scope used was S-80169 with a 53B preamp S-76639.

Procedure and Results

The test requirements for the MC-721, TR-310305, were used as a guide for vibration testing, since no test requirements have been published for the MC-1286. The results of the functional tests following vibration were compared with the results of the pre-environmental functional tests to determine if any significant changes had occurred during vibration, and this comparison was used as a test criteria, since no test requirements were available.

Five units, Serial Numbers X-0001, X-0002, X-0003, X-0004, and X-0005, were x-rayed and subjected to functional tests prior to vibration. The results of the functional tests are listed in Table I. The results of all functional tests performed throughout the vibration evaluation are listed in the sequence of the vibration axes.

RECEIVED
SEP 23 19
CENTRAL RECORD

SANDIA SYSTEMATIC DECLASSIFICATION REVIEW
DOWNGRADING OR DECLASSIFICATION STAMP

CLASSIFICATION CHANGED TO: U	AUTHORITY: W C Layne
Emelda Selph 10/07/98	RECORD ID: 99SN0062
PERSON CHANGING MARKING & DATE: W C Layne 10/12/98	
PERSON VERIFYING MARKING & DATE	DATED: 10/06/98

FILE No. MC-1286
[redacted] 3-2

UNCLASSIFIED

[redacted]

Units X-0001 and X-0004 were subjected to one hour of vibration cycling in each of three axes. This test was designated Vibration Test I, and consisted of three twenty-minute sweeps through the frequency range of 10 to 2000 to 10 cps. The input accelerations, controlled on the mounting plate, were 1 g from 10 to 23 cps, .036 inch double amplitude from 23 to 73 cps and 10 g from 73 to 2000 cps. Acceleration output was monitored in each of three directions at two locations on top of the unit, as shown in Figure I. The input acceleration was controlled so that the acceleration monitored on the unit did not exceed 10 g. Functional tests were performed on the units during the last vibration cycle in each axis. The results of these tests show no significant deviations from the results of the pre-vibration tests, and are listed in Table I. The functional tests were repeated on both units at the completion of Vibration Test I and there were no malfunctions. The results are listed in Table I.

Unit X-0003 was subjected to Vibration Test II, which consisted of a resonance survey to 2000 cps in each of three axes. The input accelerations were controlled on the mounting plate and were the same magnitude as in Vibration Test I. The accelerations seen by the unit were monitored in each of three directions at the two locations shown in Figure I. The results of this survey are plotted graphically in terms of response ratio, in the direction of force, at the two monitoring locations. The response ratio is shown for each axis in Figures II, III, and IV. Functional tests were performed on the unit after each axis of the survey. The results of these tests showed no significant deviations and are listed in Table I.

Vibration Test III was performed on Units X-0002 and X-0005. This test consisted of one hour of cycling in each of three axes, and one hour of vibration at resonance in each of three axes. The input accelerations were controlled on the mounting plate and were of the same magnitude used in Vibration Test I. A T-Plotter, which plots directly the ratio of input acceleration to output acceleration, was used to determine the resonance points on Unit X-0002 during the cycling in each axis.

In the X-Axis, the response ratio exceeded 10 to 1 at 1380 cps. This frequency was used as the resonant frequency for the resonant vibration in this axis.

In the Y Axis, the response ratio plotted exceeded 10 to 1 at 1000 cps. This frequency was used as the resonant frequency for the resonant vibration in this axis.

In the Z Axis, the response ratio plotted exceeded 10 to 1 at 820 cps. This frequency was used as the resonant frequency for the resonant vibration in this axis.

The axes designations are illustrated in Figure I. The input was controlled on the mounting plate, and the ratio between the accelerometer reading in the direction of force at the location on top and to one side of the unit, and the input accelerometer were plotted by the T-Plotter.

Functional tests were performed on the units during the last twenty minutes of cycling and resonance vibration in each axis. The results of these tests showed no significant changes and are listed in Table II.

Unit X-0002 had a bad monitor circuit when received, and as a result, none of the charge or delay times could be obtained.

Functional tests were performed on the units after completing the Vibration Test III. ~~The results~~ of these tests on Unit X-0005 showed no significant changes. In Position 3 of the continuity test on Unit X-0002, the PT-637 Tester did not indicate the specified 25 millivolt voltage drop specified by IMI-310305. The results of the other functional tests showed no significant changes in Unit X-0002. The results of these tests are listed in Table II.

All five of the units were x-rayed after the vibration tests. These x-rays show no internal changes in the units when compared with x-rays taken prior to vibration.

R. L. Kurtz
R. L. KURTZ, 1611-3

R. W. Kelley
R. W. KELLEY, 1611-3

Bill Johnson
1613 Project Engineer: BILL JOHNSON, 1613-3

Approved by: R. S. HOOPER, 1613-3

RLK:1611-3:cd

Enc: Tables I & II
Figures 1 thru 4

Copy to:
D. M. Olson, 1263
Attn: D. M. Wilkinson
W. A. Gardner, 1610
J. M. Wiesen, 1592
J. R. Harrison, 5523
R. K. Smeltzer, 3421-3

[redacted]

TABLE I

MC-1286 FUNCTIONAL TESTS T-16551

WORK SHEET

PRE-VIBRATION

UNIT	CONT. CHECK		24V D-C INPUT RISE TO 1750K SEC.	PEAK VOLTS	MONITOR VOLTS	FIRE TEST	32V D-C INPUT RISE TO 1780K SEC.	PEAK VOLTS	MONITOR VOLTS	FIRE TEST	TIME DELAY TEST PEAK VOLTS	DECAY TO 1500K SEC.	FIRE AT 1500K
X-0001	OK		1.94	2160	17.2	OK	0.72	2760	22.4	OK	2050	3.54	OK
X-0002	OK		1.7*	1970	199.7	OK	*	2550	18.0	OK	1840	*	OK
X-0003	OK		5.65	1780	17.6	OK	1.12	2450	24.0	OK	1660	1.11	OK
X-0004	OK		3.24	1900	18.7	OK	0.73	2450	24.0	OK	1710	1.41	OK
X-0005	OK		2.15	2100	20.5	OK	0.70	2650	25.5	OK	1940	2.59	OK
	VIBRATION TEST 1 Y AXIS												
X-0001			2.15	2170	17.1	OK	0.73	2770	22.6	OK	2330	3.83	OK
X-0004			3.38	1890	18.5	OK	0.68	2420	23.6	OK	1700	1.27	OK
	VIBRATION TEST 1 X AXIS												
X-0001			1.73	2170	17.7	OK	0.59	2750	22.2	OK	2020	3.98	OK
X-0004			3.10	1910	18.7	OK	0.71	2440	23.7	OK	1720	1.41	OK
	VIBRATION TEST 1 Z AXIS												
X-0001			1.89	2160	17.8	OK	0.63	2750	22.5	OK	2050	4.19	OK
X-0004			2.74	1910	18.7	OK	0.66	2430	23.6	OK	1690	1.14	OK
	AFTER VIBRATION TEST 1												
X-0001	OK		1.83	2150	17.4	OK	0.65	2780	22.6	OK	2040	3.96	OK
X-0004	OK		2.97	1860	18.50	OK	0.65	2450	23.8	OK	1700	1.32	OK
	VIBRATION TEST 2 AFTER THE Z AXIS												
X-0003	OK		3.35	1840	17.8	OK	0.76	2445	23.65	OK	1710	1.33	OK
	VIBRATION TEST 2 AFTER THE X AXIS												
X-0003	OK		3.77	1850	18.2	OK	0.77	2420	23.5	OK	1700	1.23	OK
	VIBRATION TEST 2 AFTER THE Y AXIS												
X-0003	OK		4.17	1840	18.1	OK	0.79	2430	23.6	OK	1720	1.37	OK

*THIS UNIT HAS A BAD MONITOR CKT, NO CHARGE TIME READINGS WERE OBTAINED

UNCLASSIFIED

UNCLASSIFIED

2037

TABLE II

MC-1286 FUNCTIONAL TESTS T-16551

VIBRATION TEST 3 DURING THE Y AXIS CYCLING

UNIT	CONT. CHECK		24V D-C RISE TO 1750V SEC.	24V D-C PEAK VOLTS	24V D-C INPUT MONITOR VOLTS	24V D-C FIRE TEST	32V D-C RISE TO 1750V SEC.	32V D-C PEAK VOLTS	32V D-C INPUT MONITOR VOLTS	32V D-C FIRE TEST	TIME DELAY TEST PEAK VOLTS	TIME DELAY TEST DECAY TO 1500V SEC.	TIME DELAY TEST FIRE AT 1500V
X-0002			*	2030	204	OK	*	2550	255.1	OK	1860	*	OK
X-0005			1.95	2140	20.8	OK	0.68	2700	25.8	OK	1970	2.82	OK
VIBRATION TEST 3 DURING THE X AXIS CYCLING													
X-0002			*	1980	200.2	OK	*	2530	253.5	NO	1830	*	NO
X-0005			1.97	2140	20.5	OK	0.65	2740	26.2	OK	1950	3.15	OK
VIBRATION TEST 3 DURING THE Z AXIS CYCLING													
X-0002			*	1990	198.5	OK	*	2530	251.5	OK	1770	*	NO
X-0005			2.47	2150	20.7	OK	0.66	2720	26.13	OK	1930	2.21	OK
VIBRATION TEST 3 DURING THE Z AXIS RESONANCE													
X-0002			*	1320	131.6	OK	*	2140	204.9	OK	900	*	NO
X-0005			2.21	2150	20.8	OK	.68	2700	25.8	OK	1990	2.85	OK
VIBRATION TEST 3 DURING THE Y AXIS RESONANCE													
X-0002			*	1970	198.2	OK	*	2460	246.2	OK	1840	*	OK
X-0005			2.13	2120	20.0	OK	0.68	2700	25.8	OK	1980	2.87	OK
VIBRATION TEST 3 DURING THE X AXIS RESONANCE													
X-0002			*	1870	188	OK	*	2440	241	OK	1670	*	OK
X-0005			6.81	1820	17.6	OK	0.72	2750	26.2	OK	1825	2.3	OK
AFTER VIBRATION TEST 3													
X-0002	*		*	1950	195.2	OK	*	2490	247.2	OK	1860	*	OK
X-0005	OK		1.92	2140	20.8	OK	0.70	2660	25.6	OK	1890	2.92	OK

*THIS UNIT HAS A BAD MONITOR CKT, NO CHARGE TIME READINGS WERE OBTAINED

*POSITION 3 OF CONTINUITY TEST SHOWED AN OPEN CKT

UNCLASSIFIED

UNCLASSIFIED

UNCLASSIFIED

[redacted]

FIG. 1
MC-1286 AXIS DESIGNATION

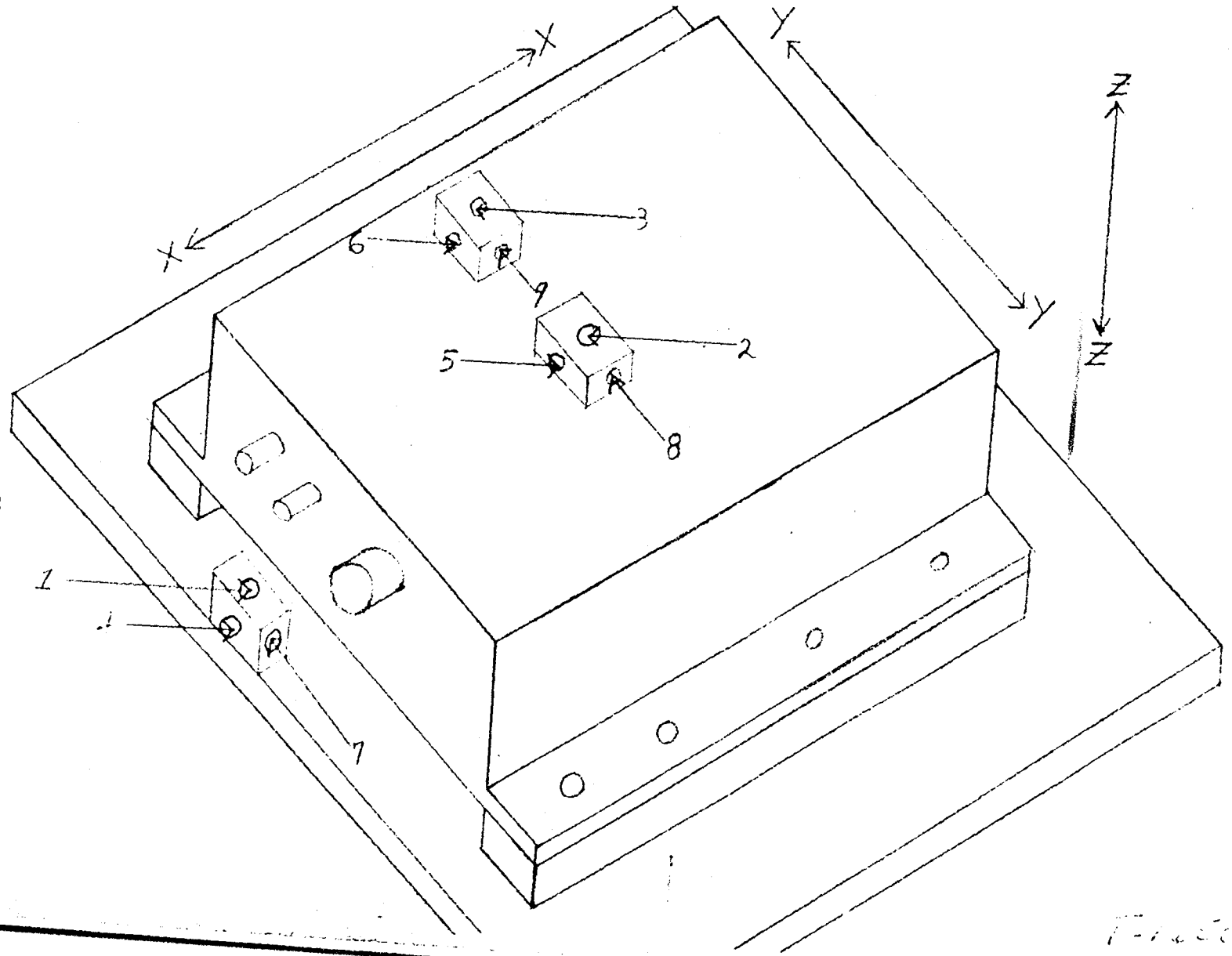

[redacted]

UNCLASSIFIED

K+E 10 X 10 TO THE ½ INCH 359-11
KEUFFEL & ESSER CO.

Fig. 2

MC - 1286 Resonant Survey Serial # L-0003 L- Axis

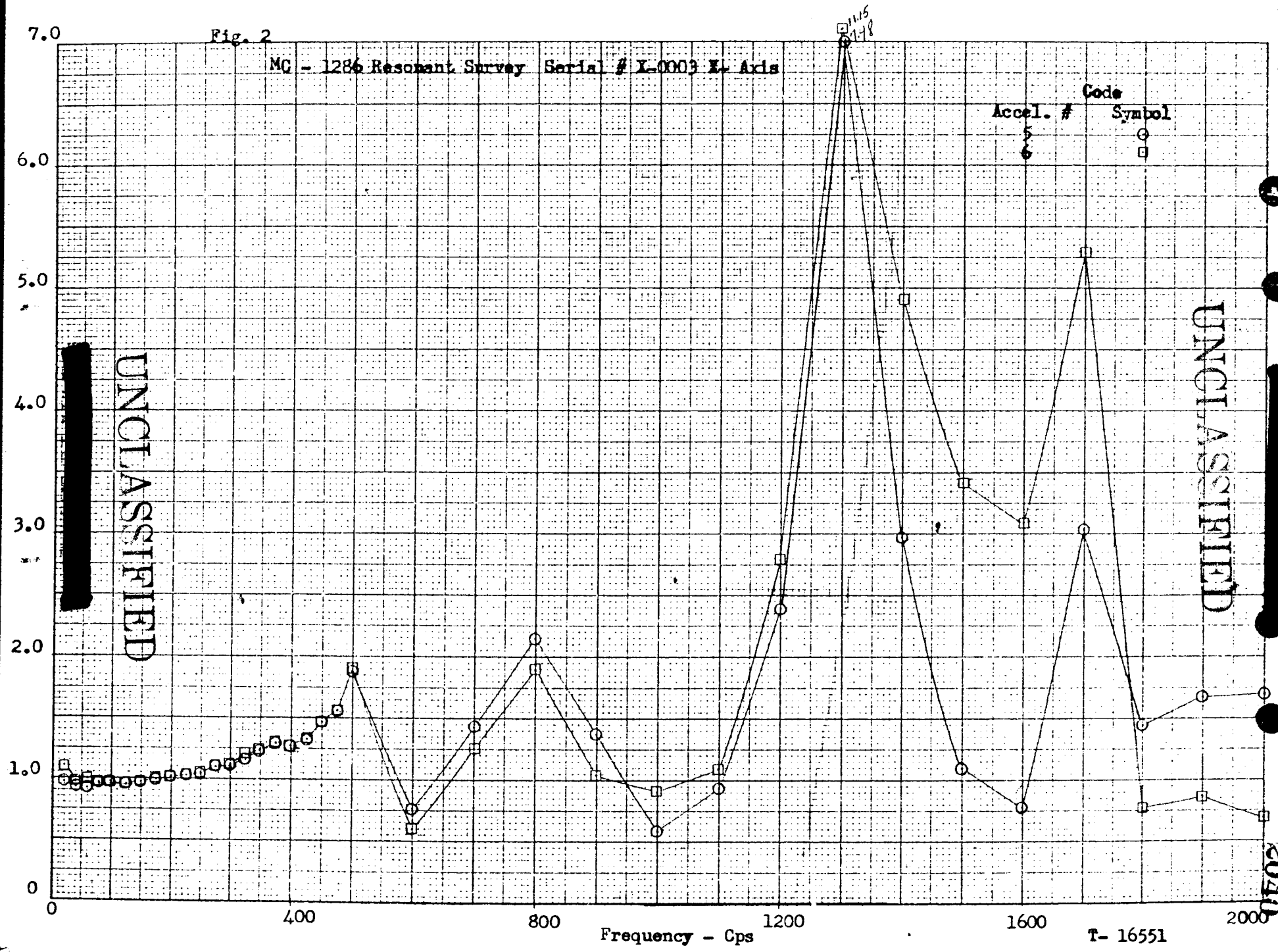

UNCLASSIFIED
[redacted]
UNCLASSIFIED
[redacted]

T- 16551

2040

KEUFFEL & ESSER CO.

Fig. 3

MC- 1286 Resonant Survey Serial # X-0003 Y - Axis

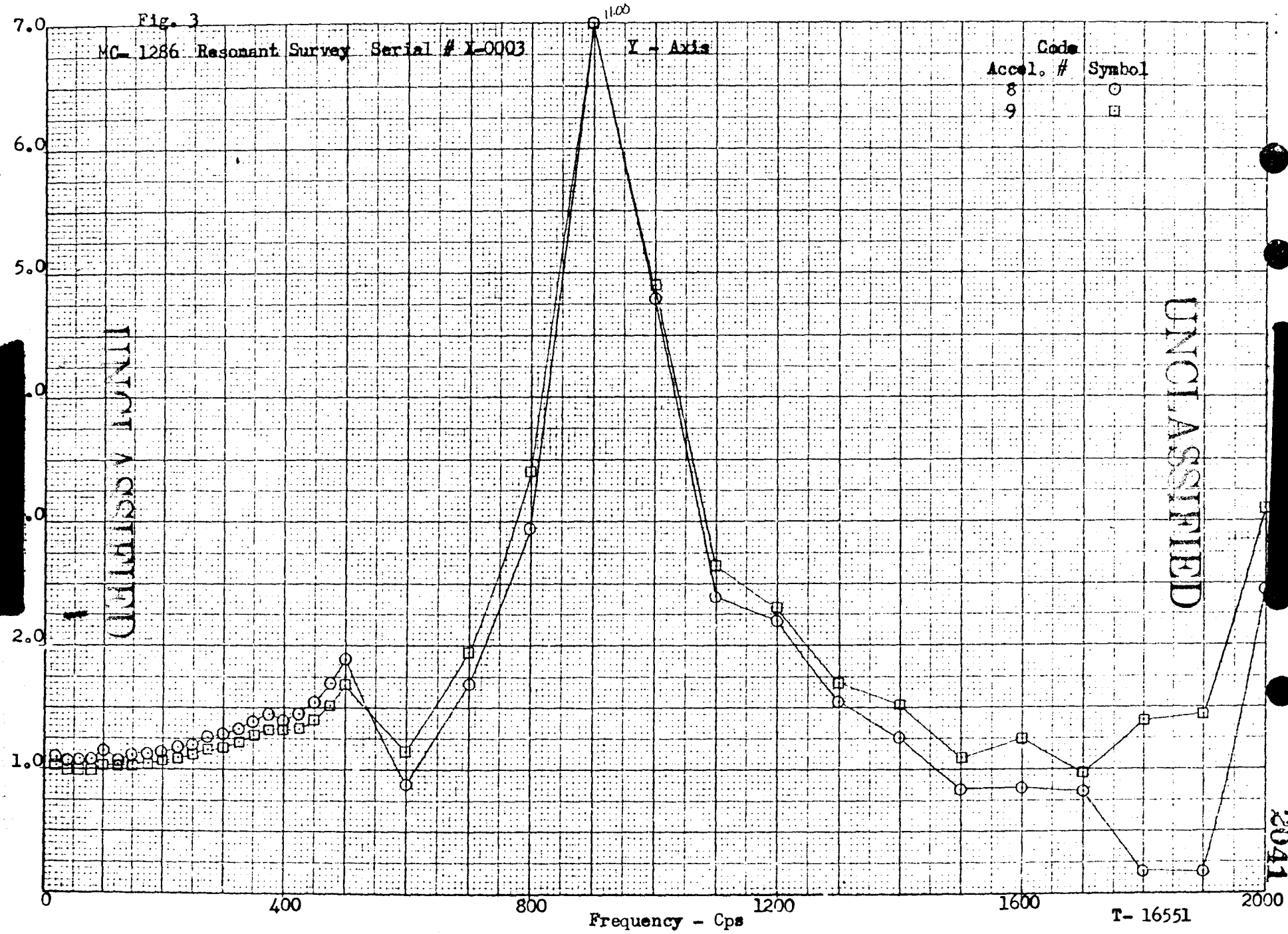

T- 16551

UNCLASSIFIED

UNCLASSIFIED

K+E 10 X 10 TO THE ½ INCH 359-11
KEUFFEL & ESSER CO

Fig. 4

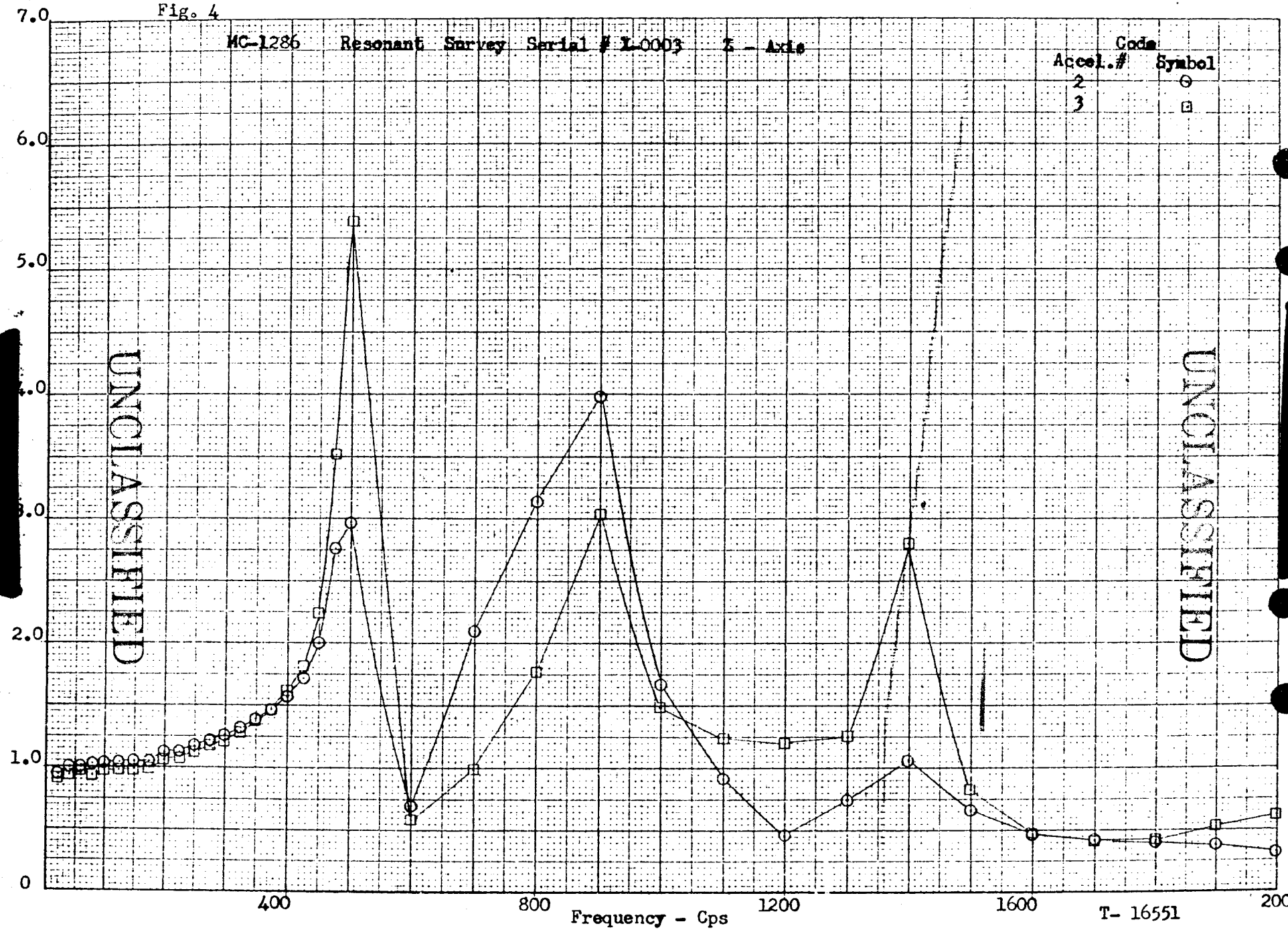

UNCLASSIFIED

UNCLASSIFIED