[redacted]

0869

UNCLASSIFIED

SANDIA SYSTEMATIC DECLASSIFICATION REVIEW
1st Review Date: 9/23/98
Authority: ☐ ADC ☒ ADD
Name: W Lange
2nd Review Date: 9/24/98
Authority: ADD
Name: RB Crane
Determination (Circle Number)
1 Classification Retained
2 Classification Changed to: U
3 Contains No DOE Classified Information
4 Coordinate With
5 Contains UCNI? NO
6 Comments: OK for Openet

RECEIVED

MAR 3 1964

CENTRAL TECH FILE

MAR 2 1964
File: MC1851, 3-2
T-19532
Test Completed: 1/23/64

CENTRAL TECHNICAL FILE
ACCOUNTABLE CARD
FILE NO. MC 1851 3-2

MR. J. W. MC KIERNAN - 7419
Attention: Mr. P. K. Goen

Re: Environmental Evaluation of Three XMC1851 Firing Sets

Object of Test

The XMC1851 is a newly developed component which is to be used aboard missiles in projected full-scale testing. The object of this test was to determine whether the XMC1851 would withstand anticipated environments.

Authorization for Test

This test was requested by Division 7419 in an Environmental Test Order received April 4, 1963. Mr. P. K. Goen was the consultant. The material for test was received September 2, 1963.

Summary

Three XMC1851 Firing Sets were submitted for environmental evaluation. The units were subjected to the following environments:

Linear acceleration	50 g's for 1 minute
Temperature shock	Three cycles of +125°F and 0°F
Vibration	10 g's input, 10 cps to 2000 cps, 3 axes; survey, cycling, and vibration at critical frequency
Mechanical shock	100 g's, 5 milliseconds, three impacts in each of six directions
Altitude	Simulated altitude of 100,000 feet

Electrical tests were performed during and/or after environments. The units met test specifications at all times except during altitude tests, however, the malfunctions which occurred during altitude tests were traced to a defective test setup.

Functional Measurements and Methods

Electrical tests of the XMC1851 were conducted on an MC1517 Tester supplied by Division 7419. Resistance measurements of the fire circuits, ground line, and continuity loop were conducted on Universal Hi-pot and Resistance Console No. 6. Telemetering voltages were measured with a Keithley Voltmeter (S-108638).

SANDIA SYSTEMATIC DECLASSIFICATION REVIEW
DOWNGRADING OR DECLASSIFICATION STAMP
CLASSIFICATION CHANGED TO: U
AUTHORITY: R.B. Crane
Emelda Selph 9/29/98
PERSON CHANGING MARKING & DATE
RECORD ID: 98SN4417
WC Lange 9/29/98
PERSON VERIFYING MARKING & DATE
DATED: 9/24/98

[redacted]

UNCLASSIFIED

[redacted]

UNCLASSIFIED

The product specification used for this test was PS-311802, Issue 3, Product Specification for MC1851.

Linear acceleration testing was conducted on Rotary Accelerator No. 3 - Schaevitz B-F-8 Centrifuge.

Mechanical shock testing was conducted on Facility No. 4, 10-foot Free-Fall Shock Machine.

Vibration testing was conducted on VM-3, MB0-25HB.

Temperature shock testing was conducted in Murphy Miller 27-cubic-foot temperature chambers.

Environmental tests were conducted in accordance with SC-4452B(M).

Procedure and Results

Three XMC1851 Firing Sets were submitted for an environmental evaluation. The serial numbers were BBN-XX5-G3, BBN-XX6-G3, and BBN-XX10-G3.

Two units, BBN-XX5-G3 and BBN-XX6-G3 were radiographically inspected along the three axes shown in Figure 1. There were no apparent defects.

Pre-environmental tests were conducted by subjecting the three units to the tests described in Paragraphs 4.3.3.1, 4.3.3.2, 4.3.3.4, 4.3.3.5, and 4.3.3.6 of PS-311802, Issue 3.

Test results are shown in Tables 1, 2, and 3. All units met test specifications.

Linear Acceleration Test

The three XMC1851's were subjected to linear accelerations of 50 g's for 1 minute. BBN-XX5-G3 was accelerated in both directions along the Z-axis. BBN-XX6-G3 was accelerated in both directions along the Y-axis. BBN-XX10-G3 was accelerated in both directions along the X-axis. Acceleration directions are shown in Figure 1.

During acceleration the units were operated dual-channel with 36.25 volts DC input. Charge times and telemetering voltages were monitored with a Tektronix 531-A Oscilloscope. All units met test specifications during linear acceleration. Telemetering voltage charge curves were photographed before and during acceleration. There were no apparent differences between the voltage curves obtained at no acceleration and those at 50 g's.

After the linear acceleration test, the three XMC1851's were tested according to Paragraphs 4.3.3.1.1, 4.3.3.1.2, 4.3.3.2, 4.3.3.4, 4.3.3.5, and 4.3.3.6 of PS-311802, Issue 3. All units met test specifications. Test results are shown in Tables 1, 2, and 3.

UNCLASSIFIED

[redacted]

UNCLASSIFIED

Temperature Shock Test

The three XMC1851's were subjected to a temperature shock test according to the following schedule:

Temperature	Time at Temperature
+125°F	4 hours
0°F	16 hours
+125°F	4 hours
0°F	4 hours
+125°F	4 hours
0°F	12 hours

Maximum elapsed time between temperature exposures was 5 minutes.

After the temperature shock test, the units were allowed to return to room temperature. They were then tested according to Paragraphs 4.3.3.1.1, 4.3.3.1.2, 4.3.3.2, 4.3.3.4, 4.3.3.5, and 4.3.3.6 of PS-311802, Issue 3. All units met test specifications. Test results are shown in Tables 1, 2, and 3.

Vibration Test

The three XMC1851's were subjected to a 60-minute logarithmic cycle along each of the three mutually perpendicular axes shown in Figure 1. Input levels were 0.2-inch double amplitude from 10 cps to 31 cps and 10 g's zero to peak from 31 cps to 2000 cps. Input levels were controlled from an accelerometer on the XMC1851 mounting plate. Frequencies of maximum XMC1851 response were determined during cycling. Response measurements were made with an accelerometer located near J1, as shown in Figure 1. During vibration along the X and Y axes, the input level had to be reduced below 10 g's in the critical frequency bandwidth. This was done to limit the XMC1851 response to 20 g's in accordance with SC-4451A(M). Critical (maximum response) frequencies are listed in Table 4. Maximum transverse accelerations of the mounting fixture are listed in Table 5. Transverse motion was 40 percent or less of the input acceleration at all frequencies.

The XMC1851's were vibrated at their critical frequencies for 30 minutes along each axis. Input levels were 10 g's or less with the maximum XMC1851 response limited at 20 g's. During vibration at the critical frequencies, the XMC1851's were operated dual-channel at 10-minute intervals. All units met test specifications during these operations. The results of these tests are shown in Table 6.

Cracks developed around some of the mounting holes of all units during vibration. A subsequent inspection of the mounting fixture showed that the XMC1851 mounting surface was not perfectly flat. This condition probably contributed to the cracking around the mounting holes.

UNCLASSIFIED

[redacted]

UNCLASSIFIED

After the vibration test, the XMC1851's were tested according to Paragraphs 4.3.3.1.1, 4.3.3.1.2, 4.3.3.2, 4.3.3.4, 4.3.3.5, and 4.3.3.6 of PS-311802, Issue 3. All units met test specifications. Test results are shown in Tables 1, 2, and 3.

After the vibration test, the mounting fixture was machined to improve the mounting surface.

Mechanical Shock Test

The three XMC1851's were subjected to three impact shocks in each of the six directions shown in Figure 1. Shock pulses approximated a haversine in wave shape. The shock pulses were approximately 100 g's in amplitude with a pulse duration of approximately 5 milliseconds.

Photographs were made of three of the shock pulses for each XMC1851. The data obtained from these photographs are listed below.

XMC1851 Serial No.	Shock No.	Acceleration Direction	Pulse Amplitude g's	Pulse Duration (Milliseconds)
BBN-XX5-G3	1	+Z	99	5.0
	4	-X	107	4.9
	10	-Y	103	5.0
BBN-XX6-G3	19	+Z	100	5.0
	25	-X	98	4.8
	31	-Y	102	5.0
BBN-XX10-G3	37	+Z	100	4.6
	43	-X	99	5.2
	49	-Y	102	5.0

Additional cracking occurred around the XMC1851 mounting holes during shock testing. The accumulative damage which occurred during vibration and mechanical shock is shown in Figures 2, 3, and 4.

After mechanical shock, the XMC1851's were tested according to Paragraphs 4.3.3.1.1, 4.3.3.1.2, 4.3.3.2, 4.3.3.4, 4.3.3.5, and 4.3.3.6 of PS-311802, Issue 3. All units met test specifications. Test results are shown in Tables 1, 2, and 3.

High-Altitude Tests

The three XMC1851's were subjected to a simulated altitude of 100,000 feet. The units were operated dual-channel with 36.25 volts DC input. The high-voltage lead from J2 of the XMC1851 was routed out of the chamber through

UNCLASSIFIED

[redacted]

UNCLASSIFIED

a high-voltage feedthrough port cover. An adapter cable was used to provide input voltage and telemetry voltage connections to J1 of the XMC1851. When the input voltage was applied, high-voltage arcing occurred between the high-voltage feedthrough connector and the chamber and between the center pin of J3 of the XMC1851 and its shell. Investigation revealed that a low resistance (approximately 1 megohm) existed between the high-voltage feedthrough connector and the chamber. An examination of the XMC1851's revealed that the MC936 Tack Switches of Units DBN-XX5-G3 and NBN-XX6-G3 had actuated. Since the adapter cable connected to J1 was an open-lead unpotted cable, it was suspected that the high-voltage breakdown between the feedthrough connector for the J2 cable and the chamber may have generated sufficient energy to actuate the MC936's.

Testing was discontinued at this time at the request of the consultant. The three XMC1851's were returned to Division 7419.

D. J. PERRETTE - 7332-1

R. G. HAMILTON - 7331-1

DJP:dys

Enc: Figures 1-4
Tables 1-6

Copy to:
C. S. Williams, 1442
C. L. Johnson, 2123
D. S. Bliss, 2344
E. H. Copeland, 7331
Central Technical File, 3428-1

UNCLASSIFIED

[redacted]

UNCLASSIFIED

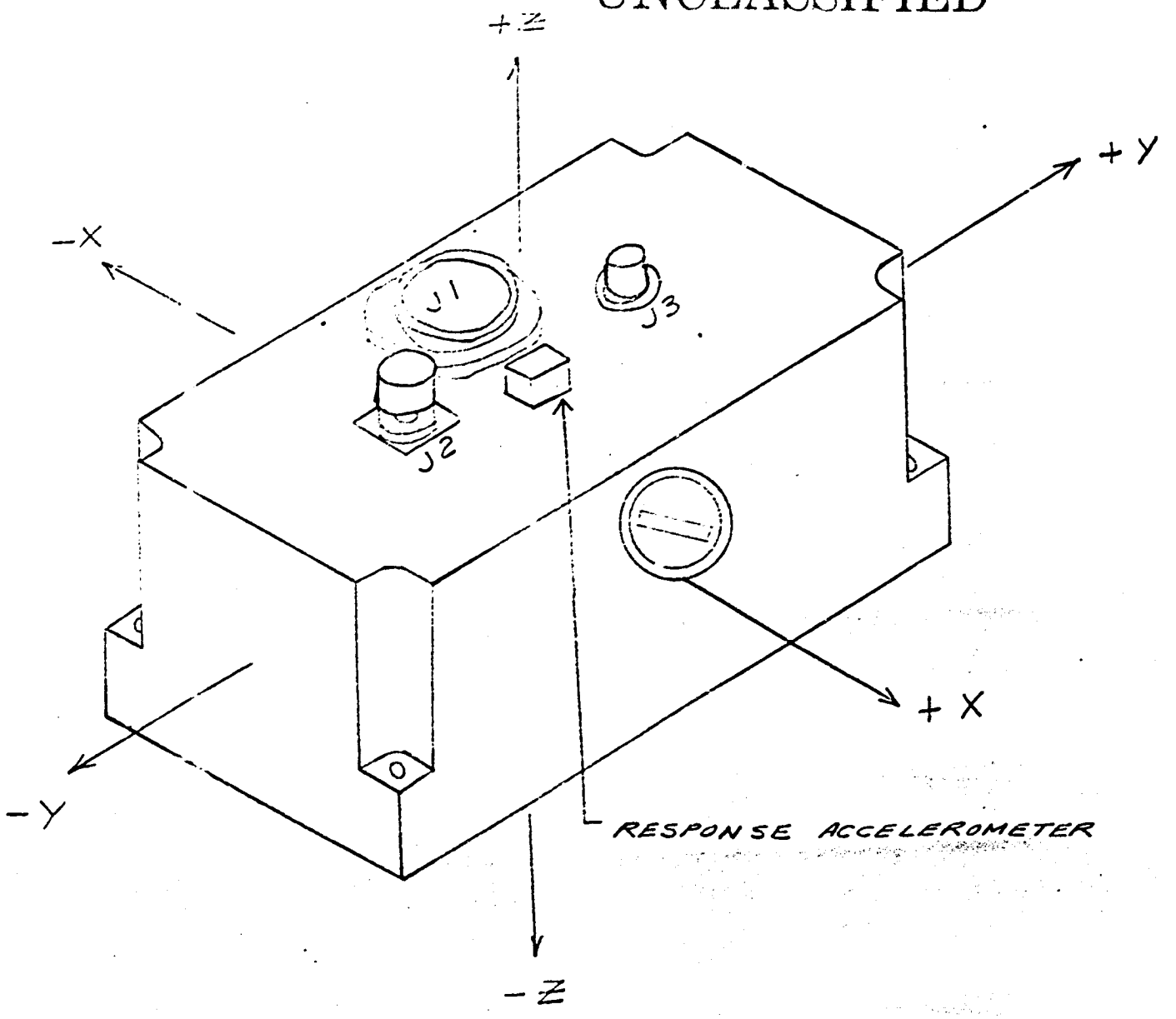

UNCLASSIFIED

FIG. 1 XMC 1851 AXES DESIGNATIONS AND ACCELERATION DIRECTIONS T-19532

[redacted]

UNCLASSIFIED

#875

FIGURE 2: XMC1851 BBN-XX5-G3 SHOWING DAMAGE [illegible] DURING VIBRATION AND MECHANICAL SHOCK

D#64-5361

-19512

UNCLASSIFIED

[redacted]

[redacted]

UNCLASSIFIED

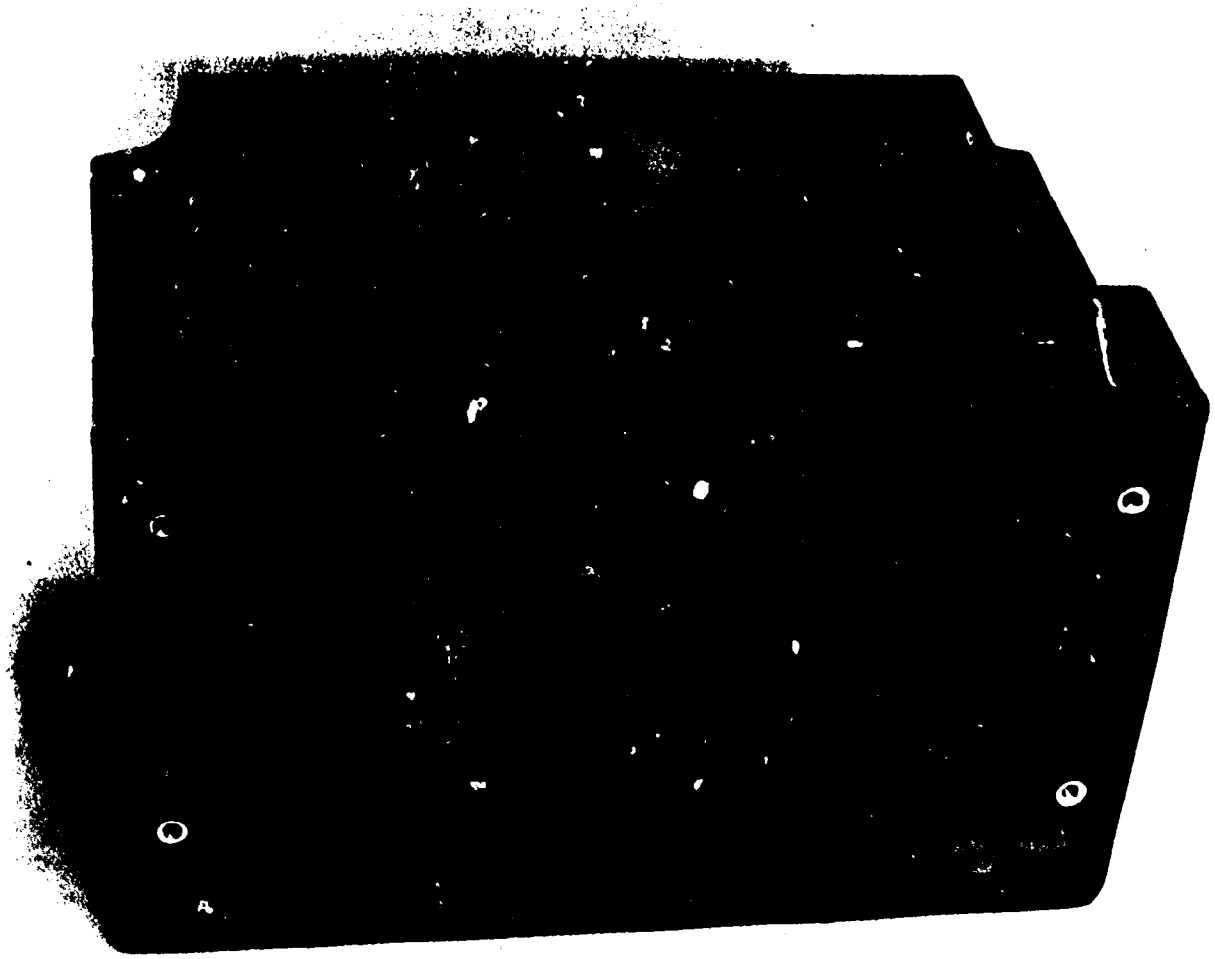

FIGURE 3: [illegible]1851 BBN- [illegible]-G3 HOWING AMAG WHICH OCCURRE[illegible] [illegible]URING VIBRA[illegible] AN[illegible] M[illegible]HANICAL HO[illegible]

[illegible]-195[illegible]2

D#64-5362

#346

UNCLASSIFIED

[redacted]

#877

[redacted]

UNCLASSIFIED

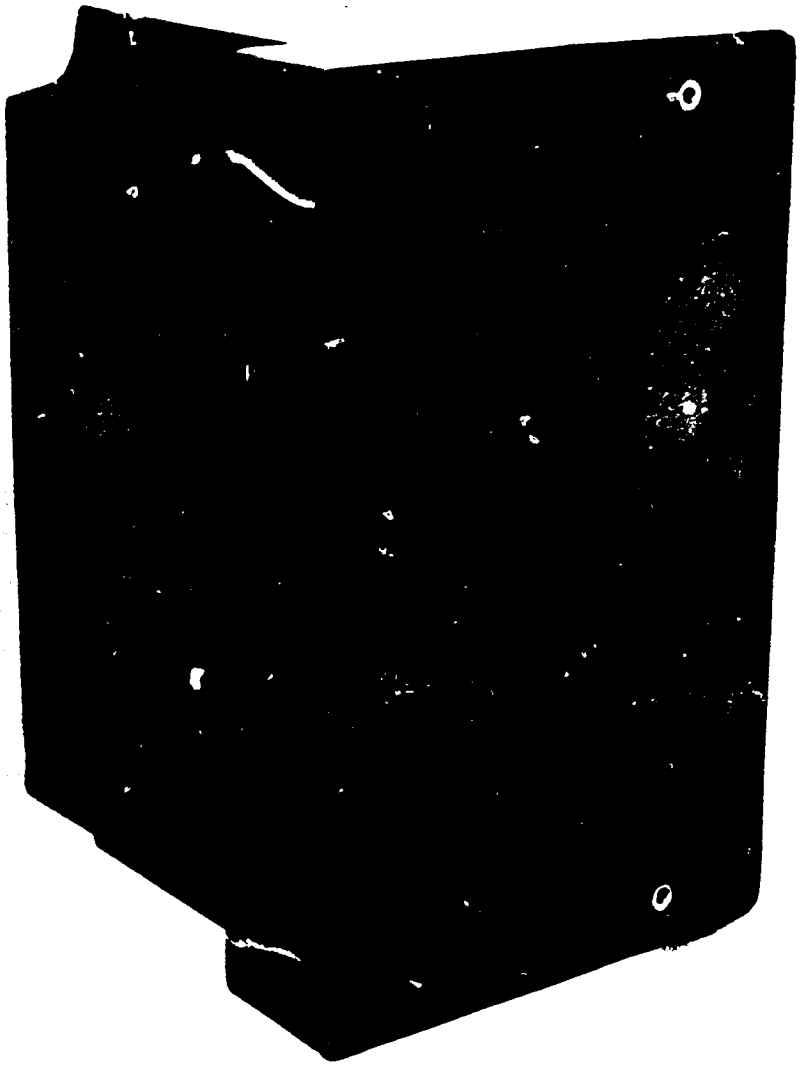

UNCLASSIFIED

[redacted]

TABLE 1

T-19532

SC 3640-E (3-59)

WORK SHEET

SER. NO. BRN-XX5-G3 MC 1851 ELECTRICAL TESTS

PS-311802

		PARAGRAPH		ENVIRONMENT PRE ENV.	POST LIN. ACC.	POST TEMP. SHOCK	POST VIB.	POST MECH. SHOCK	UNITS
1 LEAKAGE CURRENT	J2-J3		4.3.3.1	<1.0	<1.0	<1.0	<1.0	<1.0	μAmp
2 CAPACITOR LEAKAGE CURRENT	J2-Sh.		4.3.3.1	290	280	300	300	300	μAmp
3 FIRE CIRCUIT #1	J1A-J1H		4.3.3.2	1.80	1.80	1.80	1.80	1.80	OHMS
4 FIRE CIRCUIT #2	J1B-J1G		4.3.3.2	1.80	1.80	1.80	1.80	1.80	OHMS
5 GROUND LINE			4.3.3.2	0.116	0.116	0.116	0.116	0.116	OHMS
6 CONTINUITY LOOP	J1K-J1L		4.3.3.2	0.36	0.36	0.36	0.36	0.36	OHMS
7 CHARGE TIME	CH. 1		4.3.3.4	0.60	0.61	0.61	0.60	0.60	SEC.
8 I INPUT To + 5	CH. 1			0.145	0.145	0.145	0.140	0.145	AMP.
9 I INPUT To + 60	CH. 1			0.145	0.145	0.145	0.140	0.145	AMP.
10 VOUT To + 10	CH. 1			1930	1930	1930	1940	1930	VDC
11 VOUT To + 70	CH. 1			1930	1930	1940	1930	1930	VDC
12 VTELEMETRY	CH. 1		4.3.3.4	4.25	4.20	4.20	4.25	4.25	VDC
13 CHARGE TIME	CH. 2		4.3.3.5	0.63	0.64	0.63	0.64	0.63	SEC.
14 I INPUT To + 5	CH. 2			0.160	0.165	0.160	0.160	0.160	AMP.
15 I INPUT To + 60	CH. 2			0.160	0.165	0.160	0.160	0.160	AMP.
16 VOUT To + 10	CH. 2			1925	1925	1930	1925	1920	VDC
17 VOUT To + 70	CH. 2			1925	1925	1930	1925	1920	VDC
18 VTELEMETRY	CH. 2		4.3.3.5	4.25	4.25	4.20	4.25	4.25	VDC
19 CHARGE TIME	CH. 1&2		4.3.3.6	0.30	0.30	0.30	0.30	0.30	SEC.
20 I INPUT To + 5	CH. 1			0.270	0.340	0.340	0.330	0.340	AMP.
21 I INPUT To + 60	CH. 1			0.270	0.340	0.340	0.330	0.340	AMP.
22 I INPUT To + 10	CH. 2			0.310	0.365	0.360	0.360	0.365	AMP.
23 I INPUT To + 65	CH. 2			0.310	0.365	0.360	0.360	0.365	AMP.
24 VOUT To + 15	CH. 1&2			[illegible]	2020	2010	2020	2020	VDC
25 VOUT To + 70	CH. 1&2			2020	2020	2020	2030	2020	VDC
26 VTELEMETRY	CH. 1&2		4.3.3.6	4.45	4.50	4.40	4.45	4.50	VDC
CAPACITANCE	[illegible]		[illegible]	0.79					[illegible]

UNCLASSIFIED

UNCLASSIFIED

0878

SC 3640-E (3-59)
WORK SHEET

TABLE 2

T-17532

SER. NO. ABN-XX6-G3 MC 1851 ELECTRICAL TESTS

		PS-3 1802 PARAGRAPH		PRE ENV.	ENVIRONMENT POST LIN. ACC.	POST TEMP. SHOCK	POST VIB.	POST MECH. SHOCK	UNITS
LEAKAGE CURRENT	J2-J3		4.3.3.1	<1.0	<1.0	<1.0	<1.0	<1.0	uAmp
CAPACITOR LEAKAGE CURRENT	J2-Sh		4.3.3.1	290	280	300	290	290	uAmp
FIRE CIRCUIT #1	J1A-J1H		4.3.3.2	1.78	1.78	1.78	1.78	1.78	OHMS
FIRE CIRCUIT #2	J1B-J1G		4.3.3.2	1.86	1.86	1.86	1.86	1.86	OHMS
GROUND LINE			4.3.3.2	0.100	0.100	0.100	0.100	0.100	OHMS
CONTINUITY LOOP	J1K-J1L		4.3.3.2	0.210	0.210	0.210	0.210	0.210	OHMS
CHARGE TIME	CH. 1		4.3.3.4	0.61	0.66	0.66	0.66	0.65	SEC.
I INPUT To +5	CH. 1			0.145	0.150	0.140	0.150	0.150	AMP
I INPUT To +60	CH. 1			0.145	0.150	0.140	0.150	0.150	AMP
VOUT To +10	CH. 1			1920	1920	1910	1930	1920	VDC
VOUT To +70	CH. 1			1920	1920	1910	1930	1920	VDC
VTELEMETRY	CH. 1		4.3.3.4	4.20	4.20	4.20	4.15	4.20	VDC
CHARGE TIME	CH. 2		4.3.3.5	0.66	0.66	0.66	0.66	0.65	SEC.
I INPUT To +5	CH. 2			0.160	0.160	0.160	0.160	0.160	AMP
I INPUT To +60	CH. 2			0.160	0.160	0.160	0.160	0.160	AMP
VOUT To +10	CH. 2			1920	1920	1920	1930	1925	VDC
VOUT To +70	CH. 2			1920	1920	1920	1930	1925	VDC
VTELEMETRY	CH. 2		4.3.3.5	4.20	4.20	4.20	4.15	4.20	VDC
CHARGE TIME	[illegible]		4.3.3.6	0.32	0.32	0.32	0.32	0.32	SEC.
I INPUT To +5	CH. 1			0.300	0.345	0.340	[illegible]	0.345	AMP
I INPUT To +60	CH. 1			0.300	0.345	0.340	0.330	0.345	AMP
I INPUT To +10	CH. 2			0.320	0.370	0.360	0.360	0.370	AMP
I INPUT To +65	CH. 2			0.325	0.370	0.360	0.360	0.370	AMP
VOUT To +15	CH. 1			1995	2005	1990	2005	2005	VDC
VOUT To +70	CH. 1			2005	2010	2005	2005	2010	VDC
VTELEMETRY	CH. 1		4.3.3.6	4.40	4.40	4.40	4.50	4.40	[illegible]
CAPACITANCE	J2-Sh		4.3.3.1	1.02					uFd
DISS. FACTOR			4.3.3.1	0.40					%

UNCLASSIFIED

UNCLASSIFIED

0879

SC 3640-E (3-59)
WORK SHEET

TABLE 3

T-11532

SER. NO. BBN-XX10-G3 MC 1251 ELECTRICAL TESTS

PS-311802

		PARAGRAPH		ENVIRONMENT PRE ENV.	POST LIN. ACC.	POST TEMP. SHOCK	POST VIB.	POST MECH. SHOCK	UNITS
1 LEAKAGE CURRENT	J2-J3		4.3.3.1	<1.0	<1.0	<1.0	<1.0	<1.0	μ Amp
2 CAPACITOR LEAKAGE CURRENT	J2-Sh		4.3.3.1	290	280	300	295	300	μ Amp
3 FIRE CIRCUIT #1	J1A-J1H		4.3.3.2	1.80	1.80	1.80	1.80	1.80	OHMS
4 FIRE CIRCUIT #2	J1B-J1G		4.3.3.2	1.84	1.84	1.84	1.84	1.84	OHMS
5 GROUND LINE			4.3.3.2	0.120	0.120	0.120	0.120	0.120	OHMS
6 CONTINUITY LOOP	J1K-J1L		4.3.3.2	0.710	0.710	0.710	0.710	0.710	OHMS
7 CHARGE TIME	CH. 1		4.3.3.4	0.64	0.64	0.64	0.63	0.63	SEC.
8 I INPUT To +5	CH. 1			0.145	0.150	0.120	0.150	0.150	AMP
9 I INPUT To +60	CH. 1			0.145	0.150	0.120	0.150	0.150	AMP
10 VOUT To +10	CH. 1			1920	1920	1930	1920	1120	VDC
11 VOUT To +70	CH. 1			1920	1920	1930	1920	1920	VDC
12 VTELEMETRY	CH. 1		4.3.3.4	4.20	4.20	4.20	4.25	4.20	VDC
13 CHARGE TIME	CH. 2		4.3.3.5	0.62	0.63	0.63	0.62	0.62	SEC.
14 I INPUT To +5	CH. 2			0.160	0.160	0.130	0.160	0.160	AMP
15 I INPUT To +60	CH. 2			0.160	0.160	0.130	0.160	0.160	AMP
16 VOUT To +10	CH. 2			1920	1920	1920	1920	1920	VDC
17 VOUT To +70	CH. 2			1920	1920	1920	1920	1920	VDC
18 VTELEMETRY	CH. 2		4.3.3.5	4.20	4.20	4.20	4.25	4.20	VDC
19 CHARGE TIME	CH. 1&2		4.3.3.6	0.30	0.30	0.30	0.30	0.30	SEC.
20 I INPUT To +5	CH. 1			0.345	0.340	0.340	0.330	0.340	AMP
21 I INPUT To +60	CH. 1			0.295	0.340	0.340	0.330	0.340	AMP
22 I INPUT To +10	CH. 2			0.315	0.365	0.360	0.360	0.370	AMP
23 I INPUT To +15	CH. 2			0.315	0.365	0.360	0.360	0.370	AMP
24 VOUT To +15	CH. 1&2			2000	2010	2005	2005	2020	VDC
25 VOUT To +70	CH. 1&2			2000	2015	2010	2010	2020	VDC
26 VTELEMETRY	CH. 1&2		4.3.3.6	4.40	4.40	4.20	4.45	4.40	VDC
27 CAPACITANCE	J2-Sh		4.3.3.1	0.99					μfd
28 [illegible]			[illegible]	0.30					%

UNCLASSIFIED

UNCLASSIFIED

0880

SC 3640-E (3-59)
WORK SHEET

TABLE 1

T-19532

XMC 1851 CRITICAL FREQUENCIES

SERIAL NO.	AXIS	CRITICAL FREQUENCY CPS	FILTERED INPUT ON FIXTURE G	FILTERED XMC G	AMPLIFICATION FACTOR
BBN-XX5-G3	X	1300	0.8	20	25
	Y	1795	0.45	20	44.4
	Z	2000	10.0	17	1.7
BBN-XX6-G3	X	885	1.0	20	20
	Y	1217	0.52	20	38.5
	Z	2000	10.0	18.5	1.85
BBN-XX10-G3	X	1571	1.2	20	16.7
	Y	1698	0.42	20	47.6
	Z	1962	10.0	17.5	1.75

UNCLASSIFIED

UNCLASSIFIED

0881

SC 3640-E (3-59)
WORK SHEET

TRANSVERSE FIXTURE ACCELERATION DURING XMC 1851 VIBRATION CYCLING

T-19532

SERIAL NO.	INPUT AXIS	INPUT G		AXIS		MAXIMUM TRANSVERSE FIXTURE ACCELERATION G		PERCENT OF INPUT G		FREQ. CPS			
BBN-XX5-G3	X	10		Y		2.4		24		586			
	X	10		Z		3.8		38		119			
	Y	10		X		2.2		22		569			
	Y	10		Z		3.4		34		117			
	Z	10		X		1.5		15		[illegible]			
	Z	10		Y		2.0		20		1776			
BBN-XX6-G3	X	10		Y		2.8		28		569			
	X	10		Z		3.0		30		767			
	Y	10		X		2.5		25		[illegible]			
	Y	10		Z		3.3		33		[illegible]			
	Z	10		X		1.4		14		1510			
	Z	10		Y		1.7		17		[illegible]			
BBN-XX10-G3	X	10		Y		3.0		30		[illegible]			
	X	10		Z		4.0		40		119			
	Y	10		X		3.0		30		[illegible]			
	Y	10		Z		3.0		30		1941			
	Z	10		X		2.8		28		1603			
	Z	10		Y		1.6		16		[illegible]			

UNCLASSIFIED

UNCLASSIFIED

0882

SC 3640-E (3-59)
WORK SHEET

MC 1851 ELECTRICAL TESTS DURING VIBRATION AT RESONANCE

TABLE 6
T-19532

SERIAL NO.	AXIS	VIB. TIME MINUTES	V IN VDC	I IN CH. 1 AMP	I IN CH. 2 AMP	V OUT VDC	V TEL. VDC	CHG. TIME SEC.
BBN-XX5-G3	X	10	36.25					
	X	20		0.34	0.37	2020	4.50	0.30
	X	30		0.34	0.37	2020	4.50	0.30
	Y	10		0.34	0.37	2020	4.50	0.30
	Y	20		0.34	0.37	2030	4.50	—
	Y	30		0.34	0.37	2030	4.50	0.30
	Z	10		0.35	0.37	2020	4.50	0.30
	Z	20		0.35	0.37	2020	4.50	0.30
BBN-XX5-G3	Z	30		0.35	0.37	2020	4.50	0.30
BBN-XX6-G3	Y	10		0.345	0.37	2020	4.50	0.32
	Y	20		0.345	0.37	2020	4.50	0.32
	Y	30		0.345	0.37	2020	4.50	0.32
	Z	10		0.35	0.37	2005	4.50	0.32
	Z	20		0.35	0.37	2005	4.50	0.32
	Z	30		0.34	0.37	2005	4.50	0.32
	X	10		0.34	0.37	2010	4.50	0.31
	X	20		0.34	0.37	2010	4.50	0.31
BBN-XX[illegible]-G3	X	30		0.34	0.37	2010	4.50	0.32
BBN-XX10-G3	X	10		0.345	0.37	2020	4.50	0.30
	X	20		0.345	0.37	2020	4.50	0.30
	X	30		0.345	0.37	2020	4.50	0.30
	Y	10		0.34	0.37	2020	4.50	0.30
	Y	20		0.34	0.37	2020	4.50	0.30
	Y	30		0.35	0.37	2005	4.50	0.32
	Z	10		0.35	0.37	2005	4.50	0.30
	Z	20		0.35	0.37	2005	4.50	0.31
BBN-XX10-G3	Z	30	36.25	0.35	0.37	2005	4.50	0.31

UNCLASSIFIED

UNCLASSIFIED

0883