[redacted]

SANDIA SYSTEMATIC DECLASSIFICATION REVIEW
1st Review Date: 9/24/98
Authority: RB Cramer 9/28/98
2nd Review Date: W Layne
Classification (Circle Number)
Classification Changed to U
Contains No DOE Classified Information
Contains UCNI
Reviewer: Ardesh
TCG-SAFF-1, TCG-NNT-1
RECEIVED
MAR 29 1962
CENTRAL RECORD FILE

UNCLASSIFIED

MAR 23 1962

MC-1468, 3-2
T-17921 and 18267
Completed: 1-26-62

MR. C. L. CARPENTER, 7115

ATTN: MR. W. J. SHOCK

CENTRAL RECORD FILE
MC 1468
3-2

Re: Final Evaluation of the MC-1468 Thermal Battery Before Design Release (U)

Object of Test

Ten MC-1468 Thermal Batteries were subjected to various environments prior to activation to evaluate new techniques in fabricating the assembly and for final evaluation before design release.

Authorization for Test

This test was requested by Division 7115 in a Work Order Authorization received 6-30-61. Mr. W. J. Shock was the consultant. The material for test was received 7-10-61.

Summary

Ten MC-1468 Thermal Batteries, Serial Numbered X001, X002, X003, X004, X005, X006, X007, X008, X009 and X010 were tested in sequence as follows: Serial Numbers X001 and X002 were subjected to Temperature Shock in accordance with Paragraph A5 of SC-4451(M), Vibration in accordance with Paragraph 4.3.3.5 of PS-311273, Issue 1, and Firing Test in accordance with Paragraph 4.3.3.7 of PS-311273, except that the units were fired at -70°F instead of at -65°F as specified.

Serial Numbers X003, X004, X007 and X008 were subjected to vibration in accordance with Paragraph 4.3.3.5 of PS-311273 followed by Temperature Shock in accordance with Paragraph A5 of SC-4451(M), and finally a Firing Test at -65°F in accordance with Paragraph 4.3.3.7 of PS-311273. Serial Numbers X005 and X006 were subjected to vibration in accordance with Paragraph 4.3.3.5 of PS-311273, Temperature Shock in accordance with Paragraph A5 of SC-4451(M), and, after a temperature soak at +160°F for 24 hours, were fired in accordance with Firing Test (Paragraph 4.3.3.6.3 of PS-311273. Because of an intermittent galvanometer, the reliability of the data was questionable. Serial Numbers X009 and X010 were subjected to environmental exposures in the following sequence: vibration in accordance with Paragraph 4.3.3.5 of PS-311273, followed by Temperature Shock in accordance with Paragraph A5 of SC-4451(M). The units were then activated at +160°F in accordance with Paragraph 4.3.3.6.3 of PS-311273.

SANDIA SYSTEMATIC DECLASSIFICATION REVIEW
DOWNGRADING OR DECLASSIFICATION STAMP
CLASSIFICATION CHANGED TO: U
AUTHORITY: W. C. Layne
Emelda Selph 9/29/98
PERSON CHANGING MARKING & DATE
RECORD ID: 98SN4500
WC Layne 9/29/98
PERSON VERIFYING MARKING & DATE
DATED: 9/28/98

UNCLASSIFIED

[redacted]

X-ray photographs and electrical tests in accordance with Paragraph 4.3.3 of PS-311273 were conducted initially and after each environmental exposure. This data is shown in Table 3.

Serial Numbers X001, X002, X003, X004, X007, X008, X009 and X010 satisfactorily met all Test Requirements. Serial Numbers X005 and X006 apparently did meet the Test Requirements, however trouble in the instrumentation when these batteries were activated made the readings extremely doubtful, so the observed voltages are not included.

Functional Measurements and Methods

The instrumentation and equipment used in this test are listed in Tables 1 and 2.

The test data in Tables 4 and 5 show the circuit resistance in ohms obtained. The voltmeter-ammeter method of measurement, using 100 milliamperes current flow was used.

The resistance measured between pins J and K were all within the range specified in PS-311273, Issue 1 and were measured with the Sandia Circuit Resistance and Hi-Pot Tester, S-116174. Circuit current was kept at 10 milliamperes to prevent bridge wire activation.

The Hi-Pot test, which is a part of the electrical tests, consisted of applying 23.0 ± 1.0 VDC across Pins G and H of J1, with H the positive and G the negative terminal for the purpose of closing the high voltage relay. 3000 VDC was applied across J3 with the center pin positive and the shell negative. All pins except H of J1 and H of J2 were tied together. The test requirements stated that the leakage current should not exceed 250 microamperes. All readings were less than 25 ua.

The above test was repeated except 23.0 ± 1.0 VDC was applied to Pins G and H of J2. The test requirements were met satisfactorily.

The relay contacts were monitored during vibration. No evidence of chatter was observed.

Procedure and Results

Ten MC-1468 Thermal Batteries, Serial Numbers X001, X002, X003, X004, X005, X006, X007, X008, X009, and X010 were received for environmental testing. Units Numbered X001 through X006 were received on 7-10-61 and units Numbered X007, X008, X009 and X010 were received for test on 11-20-61.

X-ray photographs were made and electrical tests were individually conducted upon initial receipt of the ten units and after each of the environmental exposures. The X-ray and electrical tests were in accordance

with Paragraph 4.3.3 of PS-311273, Issue L. No evidence of any physical or electrical defects was observed at any time on any battery. The sequence of environments was as follows:

Serial Numbers X001 and X002 were subjected to Temperature Shock in accordance with Paragraph A5 of SC-4451(N). This environment consisted of three cycles of Temperature Shock with one cycle consisting of 4 hours at 160°F followed by 4 hours at -65°F. Both units were then individually subjected to vibration in accordance with Paragraph 4.3.3.5 of PS-311273. The vibration at room temperature consisted of a critical frequency survey at the following input levels: 0.018 double displacement amplitude from 10 cps-73 cps, and 5.0 g from 73 cps - 2000 cps. The vibration survey consisted of three 20-minute cycles along each of the three mutually perpendicular axes for a total vibration time of 60 minutes along each axis. Critical frequency was to be that frequency at which chatter occurred. No chatter occurred at any frequency. In the consultant's judgement, no further vibration tests were required because no chatter was indicated. The batteries were electrically tested and X-ray photographs were made after each of the environments. There were no indications of any physical or electrical defects which might result in a malfunction.

Batteries, Serial Numbers X001 and X002 were then subjected to a firing test in accordance with Paragraph 4.3.3.7 of PS-311273. This test was conducted at -70°F instead of the -65°F specified. Both units were subjected to a 24-hour temperature soak at -70°F prior to firing. The firing test consisted of the following: Applying 12.0 ± 1.0 VDC across pins J and K of J1 and then across pins J and K of J2. The positive terminal was J and the negative K.

Applying 16.0 ± 60 VDC across pins G and H of J1 and pins G and B of J2 with pins G positive and pins H and B negative.

Finally, applying a firing signal of 20.0 ± 0.5 VDC to pins L and A of J1 and pins L and A of J2. The source impedance was 0.8 ± 0.2 ohm. The performance requirements of Paragraph 4.3.3.6.4 of PS-311273 were met. This data is shown in Table 3.

Batteries, Serial Numbers X003, X004, X007 and X008 were subjected to vibration in accordance with Paragraph 4.3.3.5 of PS-311273 consisting of a critical frequency survey with frequencies and input levels as follows: 0.018 Double Displacement Amplitude from 10 cps - 73 cps and 5.0 g from 73 cps - 2000 cps. Critical frequency was to be any frequency or band of frequencies at which chatter occurred. The survey consisted of three 20-minute cycles along each of the three mutually perpendicular axes for a total time of 60 minutes. No chatter occurred at any frequency.

In accordance with the consultant's request, no further vibration testing was performed because no chatter was indicated. Electrical tests (Continuity and Hi-Pot) were performed and X-ray photographs were made initially and after each environmental exposure. There were no indications of any physical or electrical defects caused by any of the environments. The electrical test data is shown in Tables 4 and 5.

Serial Numbers X003, X004, X007 and X008 were then subjected to temperature shock in accordance with Paragraph A5 of SC-4451(M). This shock consisted of three cycles with one cycle being 4 hours at +160°F and 4 hours at -65°F. Electrical tests were performed and X-ray photographs were made at this time. There were no indications of any physical or electrical defects caused by this temperature environment.

Batteries, Serial Numbers X003, X004, X007 and X008 were then subjected to a temperature soak for 24 hours at -65°F after which the units were fired in accordance with Paragraph 4.3.3.7 of PS-311273. This firing test consisted of applying 12.0 ± 1.0 VDC across pins J and K of J1 and also across pins J and K of J2 with pins J positive and pins K negative. 16.0 ± 1.0 VDC was then applied across pins G and H of J1 and pins G and H of J2 with pins G positive, H and G negative.

The firing signal of 20.0 ± 0.5 VDC was applied to pins L and A of J1 and pins L and A of J2. The source impedance was 0.8 ± 0.2 ohm. The performance requirements of Paragraph 4.3.3.6.4 of PS-311273 were met. This data is shown in Table 3.

Batteries, Serial Numbers X005, X006, X009, and X010 were subjected to the following environmental exposures:

Vibration in accordance with Paragraph 4.3.3.5 of PS-311273 consisting of a critical frequency survey with input levels of 0.018 inch double displacement amplitude from 10 cps to 73 cps and 5.0 g from 73 cps to 2000 cps. The critical frequency was to be any frequency or band of frequencies at which chatter occurred. This test consisted of three 20-minute cycle along each of the three mutually perpendicular axes for a total vibration time of 60 minutes. No chatter was observed at any frequency. Electrical tests and X-ray photographs revealed no evidence of any physical or electrical defects caused by this environmental exposure. The data is shown in Tables 4 and 5.

Serial Numbers X005, X006, X009 and X010 were then subjected to temperature shock in accordance with Paragraph A5 of SC-4451(M). This temperature shock consisted of three cycles with one cycle consisting of 4 hours at +160°F followed by 4 hours at -65°F. Electrical tests and X-ray photographs again showed no indications of any physical or electrical defects caused by this environmental exposure.

Units, Serial Numbered X005, X006, X009 and X010 were then subjected to a temperature soak at +160°F for 24 hours. The four units were then individually activated in accordance with Paragraph 4.3.3.6.3 of PS-311273 (Firing Test). With all units at +160°F, the firing test consisted of applying 12.0 ± 1.0 VDC across pins J and K of J1 and then across pins J and K of J2 with pins J positive and pins K negative. 16.0 ± 1.0 VDC was then applied across pins G and H of J1 and Pins G and B of J2 with pins G positive and H and B negative. The firing signal of 20.0 ± 0.5 VDC was then applied across pins H and A of J1 and pins L and A of J2. The source impedance was 0.8 ± 0.2 ohms. Serial Numbers X005 and X006 apparently delivered an overvoltage during the firing test. Investigation proved that the instrumentation was at fault and not the units. An intermittent galvanometer made all readings appear as if the batteries were furnishing a higher voltage than possible. Tests on the other two units, (Serial Numbers X009 and X010) at the same temperature and environmental exposures and with no instrumentation faults, gave positive results which are tabulated in Table 3. Serial Numbers X009 and X010 satisfactorily met the test requirements.

Glenn E. Richardson
GLENN E. RICHARDSON - 7321-3

RWK
R. G. Hamilton

TEST PROJECT ENGINEER: R. G. HAMILTON - 7321-5

GER:7321-3:mep

Enc. Fig. 1
Tables 1-5

Copy to:
J. N. Wiesen, 1442
D. S. Bliss, 2344
L. E. Snodgrass, 2561
E. H. Copeland, 7321
C. L. Johnson, 7523
R. K. Smeltzer, 3421-3

[redacted]

UNCLASSIFIED

T-17921 & T-18267

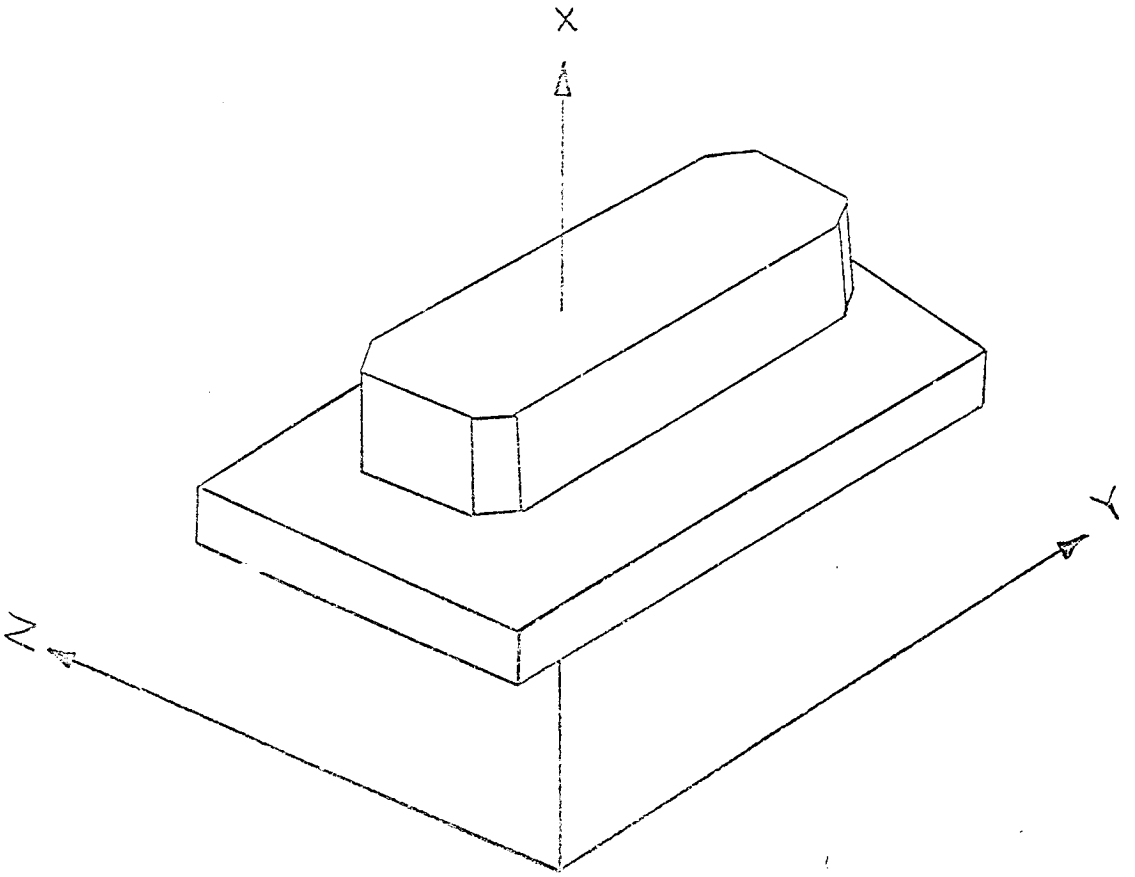

FIGURE 1

VIBRATION AXES FOR MC-1468 THERMAL BATTERY

UNCLASSIFIED

[redacted]

[redacted]

UNCLASSIFIED

T - 17721 18267

TABLE 1
ENVIRONMENTAL
EQUIPMENT LIST

ITEM NO.	NAME	MFG. & MODEL	S-NO./ SER. NO.	DATE OF LAST CAL.	CAL. PER.	ACCURACY	RANGE	REMARKS
1	Temp. Chbr.	Murphy Miller #6	5-43314	2-1-62	30 da.	± 2° F	+350° F	—
2	Temp. Chbr.	Murphy Miller #11	5-97484	2-1-62	30 da	± 2° F	-100 + 600° F	—
3	M-B Vib Table	M-B	# 3	Prior to Test	30 da.	DA ± 5% Acc ± 10% FR ± 2%	10-2000 cps	—

[redacted]

UNCLASSIFIED

1383

[redacted]

T - 17921 [illegible] 13,267

TABLE 2
FUNCTIONAL
EQUIPMENT LIST

UNCLASSIFIED

ITEM NO.	NAME	MFG. & MODEL	S-NO./ SER. NO.	DATE OF LAST CAL.	CAL. PER.	ACCURACY	RANGE	REMARKS	
1	Visicorder	Minn-Honeywell Mod-906A	S-5726	Prior to Test	Prior to Test	±0.5%	Variable	—	
2.	Hi Pot and Cont Tester	Sandia	S-116-174	9-26-61	90 da.	±0.5%	Variable	—	
3.	Multi meter	Weston 901	S-113-184	10-2-61	6 mos.	±0.5%	Variable		
4.	Simpson Multimeter	Simpson 260	S-111-114	9-21-61	6 mos.	±3%	Variable		

[redacted] UNCLASSIFIED

1363

TABLE 3

OUTPUT VOLTAGES OF MC-1468 DURING ENVIRONMENTAL EVALUATION

PARAMETER	SPECIFIED VALUE	OBSERVED TEST VALUES							
		X003	X004	X010	X009	X001	X002	X007	X008
		+160°	+160°	+160°	+160°	−70°	−70°	−65°	−65°
Rise time	2 Sec.	.75	.73	.8	.75	.84	.85	1.1	1.1
Max. E	2600 V	2300	2350	2350	2450	2400	2390	2470	2450
E at 60 Sec.	1525 V	2270	2320	2300	2400	2380	2380	2370	2300
E at 90 Sec.	Not Spec.	2270	2320	2300	2370	2280	2280	2150	2100
Actuated Life		–	–	–	342	356	–	169	157

UNCLASSIFIED

[redacted]

TABLE 4

UNCLASSIFIED

MC-1468 CIRCUIT RESISTANCE IN OHMS

T-17921 and T-18267

Initial Tests	Circuit From - To									
Serial Number	J1C-J2C	J1D-J1F	J2D-J2F	J1E-J2E	J1G-J1H	J2G-J2H	J1J-J1K	J2J-J2I	J1A-J1L	J2A-J2L
BBN - X001 - J1	0.021	0.046	0.048	0.048	<33.0	<33.0	5.85	6.00	2.12	2.14
BBN X002 - J1	0.022	0.048	0.046	0.049	<33.0	<33.0	5.87	6.02	2.10	2.12
BBN X003 - J1	0.022	0.048	0.045	0.051	<33.0	<33.0	5.85	6.00	2.10	2.11
BBN X004 - J1	0.025	0.050	0.042	0.050	<33.0	<33.0	5.85	6.01	2.14	2.11
BBN X005 - J1	0.022	0.048	0.044	0.046	<33.0	<33.0	5.83	6.01	2.12	2.13
BBN X006 - J1	0.022	0.048	0.044	0.046	<33.0	<33.0	5.83	5.99	2.11	2.13
After Vibration										
BBN - X001 - J1	0.020	0.048	0.050	0.049	<33.0	<33.0	5.86	5.89	2.07	2.08
BBN - X002 - J1	0.020	0.049	0.048	0.049	<33.0	<33.0	5.98	5.95	2.09	2.09
BBN - X003 - J1	0.024	0.048	0.050	0.047	<33.0	<33.0	6.01	5.98	2.10	2.10
BBN - X004 - J1	0.024	0.049	0.050	0.051	<33.0	<33.0	6.00	6.00	2.10	2.10
BBN - X005 - J1	0.020	0.051	0.050	0.048	<33.0	<33.0	6.00	5.98	2.08	2.12
BBN - X006 - J1	0.022	0.051	0.047	0.051	<33.0	<33.0	5.98	5.98	2.08	2.09
After Temp. Shock										
BBN - X001 - J1	0.022	0.048	0.050	0.050	<33.0	<33.0	5.96	6.00	2.10	2.12
BBN - X002 - J1	0.024	0.051	0.052	0.052	<33.0	<33.0	5.98	5.99	2.12	2.09
BBN - X003 - J1	0.022	0.052	0.050	0.051	<33.0	<33.0	5.95	6.02	2.14	2.11
BBN - X004 - J1	0.022	0.052	0.050	0.050	<33.0	<33.0	5.95	6.02	2.14	2.11
BBN - X005 - J1	0.022	0.048	0.048	0.048	<33.0	<33.0	5.98	6.00	2.12	2.14
BBN - X006 - J1	0.020	0.049	0.047	0.048	<33.0	<33.0	5.98	5.98	2.10	2.12

UNCLASSIFIED

[redacted]

1365

[redacted]

UNCLASSIFIED

TABLE 5

MC-1468 CIRCUIT RESISTANCE IN OHMS

T-17921 and T-18267

Initial Tests	From and To:												
Serial Number	J1C-J2C	J1D-J1F	J2D-J2F	J1E-J2E	J1G-J1H	J2G-J2H	J1K-J1J	J2K-J2J	J1A-J1L	J2A-J2L			
BRN-X007-J1	0.025	0.048	0.048	0.050	<33.0	<33.0	5.85	6.02	2.10	2.15			
BRN-X008-J1	0.022	0.050	0.050	0.048	<33.0	<33.0	5.90	5.90	2.15	2.17			
BRN-X009-J1	0.025	0.048	0.050	0.048	<33.0	<33.0	5.95	5.98	2.12	2.15			
BRN-X010-J1	0.022	0.050	0.050	0.048	<33.0	<33.0	5.95	5.95	2.10	2.15			
After Vibration													
BRN-X007-J1	0.022	0.048	0.048	0.048	<33.0	<33.0	5.95	5.90	2.15	2.15			
BRN-X008-J1	0.022	0.048	0.048	0.052	<33.0	<33.0	5.95	5.92	2.12	2.15			
BRN-X009-J1	0.025	0.046	0.050	0.050	<33.0	<33.0	5.92	5.95	2.12	2.14			
BRN-X010-J1	0.025	0.050	0.050	0.050	<33.0	<33.0	5.98	5.95	2.15	2.12			
After Temp. Shock													
BRN-X007-J1	0.022	0.046	0.046	0.048	<33.0	<33.0	5.90	5.92	2.10	2.15			
BRN-X008-J1	0.026	0.046	0.048	0.050	<33.0	<33.0	5.92	5.92	2.15	2.15			
BRN-X009-J1	0.026	0.045	0.048	0.048	<33.0	<33.0	5.95	5.96	2.10	2.12			
BRN-X010-J1	0.029	0.048	0.048	0.048	<33.0	<33.0	5.96	5.96	2.12	2.15			

[redacted]

UNCLASSIFIED