[redacted]

UNCLASSIFIED

| SANDIA SYSTEMATIC DECLASSIFICATION REVIEW DOWNGRADING OR DECLASSIFICATION STAMP | |
|---|---|
| CLASSIFICATION CHANGED TO: U | AUTHORITY: W. C. Layne |
| Emelda Selph 8/25/98 | |
| PERSON CHANGING MARKING & DATE | RECORD ID: 98SN3770 |
| W. C. Layne 8/25/98 | |
| PERSON VERIFYING MARKING & DATE | DATED: 8/19/98 |

NOV 25 1958

Case No. 853.00
Ref. Sym: 1612 (892)
Project No. TM-935
File: TX-28, 3-2

MR. A. V. ENGEL, JR. - 1215

Attn: Mr. R. E. Howell - 1215-1

Re: Static Test of TX-28/X2 Forward Case Section

SANDIA SYSTEMATIC DECLASSIFICATION REVIEW
1st Review Date: 8/18/98
Authority: ADD
Name: R. Bradner
2nd Review Date: 8/19/98
Authority: ADD
Name: W Layne
Determination (Circle Numbers):
1. Classification Retained
2. Classification Changed to: U
3. Contains No DOE Classified Information
4. Coordinate With:
5. Contains UCAI?
6. Comments: Declassify

## Summary of Results

A TX-28/X2 forward case section (XMC-1112) was subjected to simulated B-47 sway brace loads up to 150 per cent design limit. A maximum stress of 48,240 psi tension was obtained directly under the loading pad. No failure occurred, but a small amount of yielding was detected.

## Object of Test

The object of this test was to subject the TX-28/X2 forward case section (XMC-1112) to static loads simulating sway brace loads encountered during carriage in the B-47 aircraft.

## Reason for Test

This test was performed in accordance with a Work Order Authorization from Organization 1215 to Organization 1612, dated October 27, 1958. Mr. R. E. Howell, 1215-1, was the consultant.

## Summary of Past Tests

No previous static tests on the TX-28/X2 forward case section have been performed by Organization 1612.

RECEIVED
NOV 25 1958
CENTRAL RECORD FILE

## Setup for Test

The object tested was the XMC-1112, as defined in Dwg. No. 310893.

The following equipment was used:

2 - Load cells, 5000 pounds capacity, Serial Nos. 2127 and 4898
2 - Blackhawk hydraulic jacks, 7-ton capacity
2 - Blackhawk hydraulic pumps
3 - Baldwin strain indicators, Serial Nos. 46593, 391902, 199392
1 - Ten channel strain gage switching box

UNCLASSIFIED

[redacted]

TX-28-X2
3-2

The following instrumentation was used:

6 - SR-4 strain gages, Type A-7, gage factor of 1.98 ± 2%, resistance of 119.5 ± 0.3 ohms, Lot No. B-32, DFW3.

Procedure

Three strain gages, in the form of a rectangular rosette, were mounted on the inside of the case skin directly under each of the two sway brace load points. The case section was cantilevered from the static jig by attaching the threaded ring in the rear of the case to a mounting ring bolted to the jig. Simulated sway brace loads were applied to the outer skin through two-inch diameter, flat steel disks. Location and orientation of the loads are shown in Fig. 1.

Loads were applied in increments up to 110 per cent design limit. At this point the test was halted to make repairs in the setup. Following repairs, the test was repeated, this time loading to 150 per cent design limit. Strain gage readings were taken at each increment.

Results

Strain gage readings are given in Table I, and calculated principal stresses are given in Table II. The highest stress obtained was 48,240 psi tension at load point "A" under 150 per cent design limit load. No failures occurred, but visual inspection after the test revealed a small amount of yielding at load point "A". This is further supported by a load-strain plot for strain gage No. 1 (Fig. 2).

Conclusions

It is concluded that the TX-28/X2 forward case section (XMC-1112) will adequately withstand the sway brace loads applied in this test. The yielding incurred was not considered serious.

W. M. SIGMON - 1612-2

WMS:1612-2:as

Approved by: PAUL H. ADAMS - 1612

Copy to:
W. A. Gardner, 1610
D. M. Bruce, 1282
C. L. Gomel, 5523
R. K. Smeltzer, 7221-3

NOTE: STRAIN GAGES 1, 2, AND 3 WERE MOUNTED INSIDE THE CASE DIRECTLY UNDER LOAD A; GAGES 4, 5, AND 6 WERE MOUNTED UNDER LOAD B.

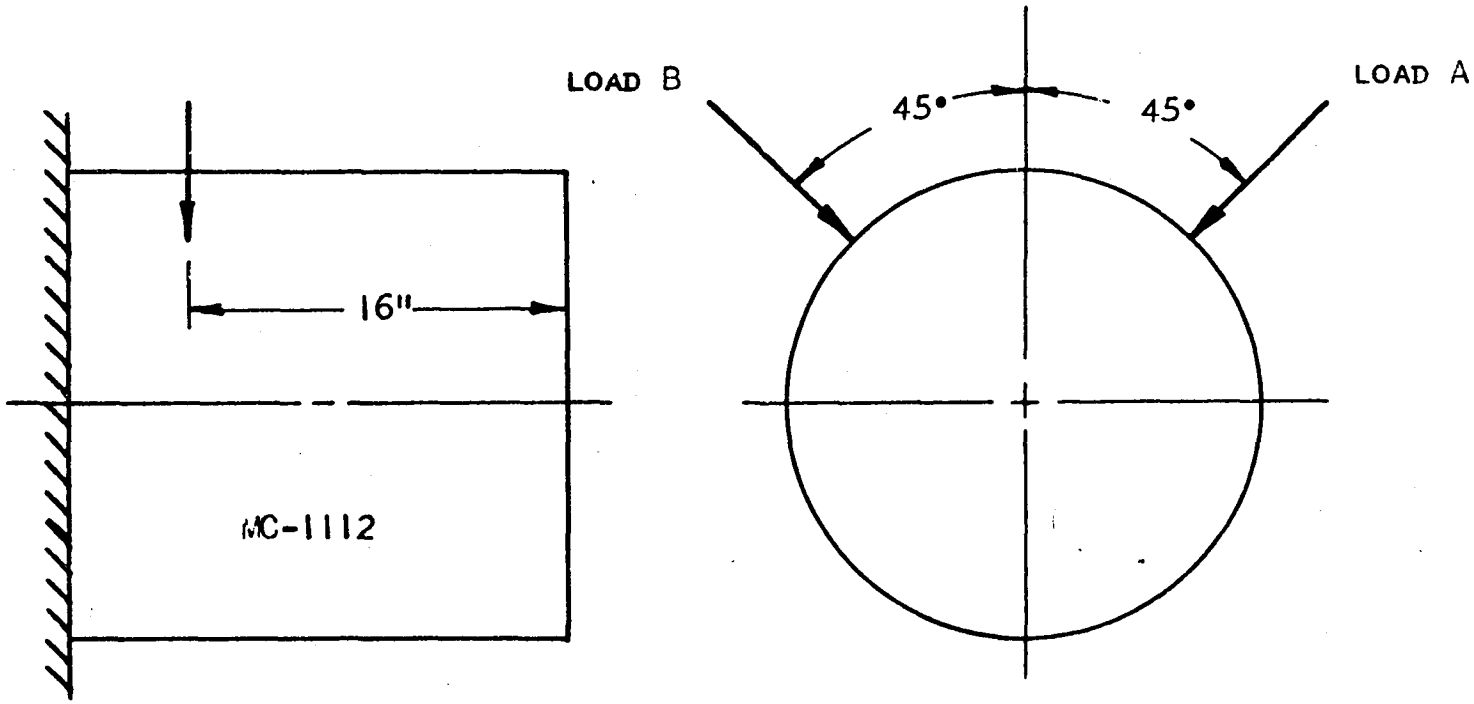


FIG. 1 -- LOCATION AND ORIENTATION OF LOADS -- STATIC TEST OF TX-28/X2 FORWAPD CASE SECTION.

REF. SYM: 1612 (892)
PROJECT NO. TM-935





1097

UNCLASSIFIED

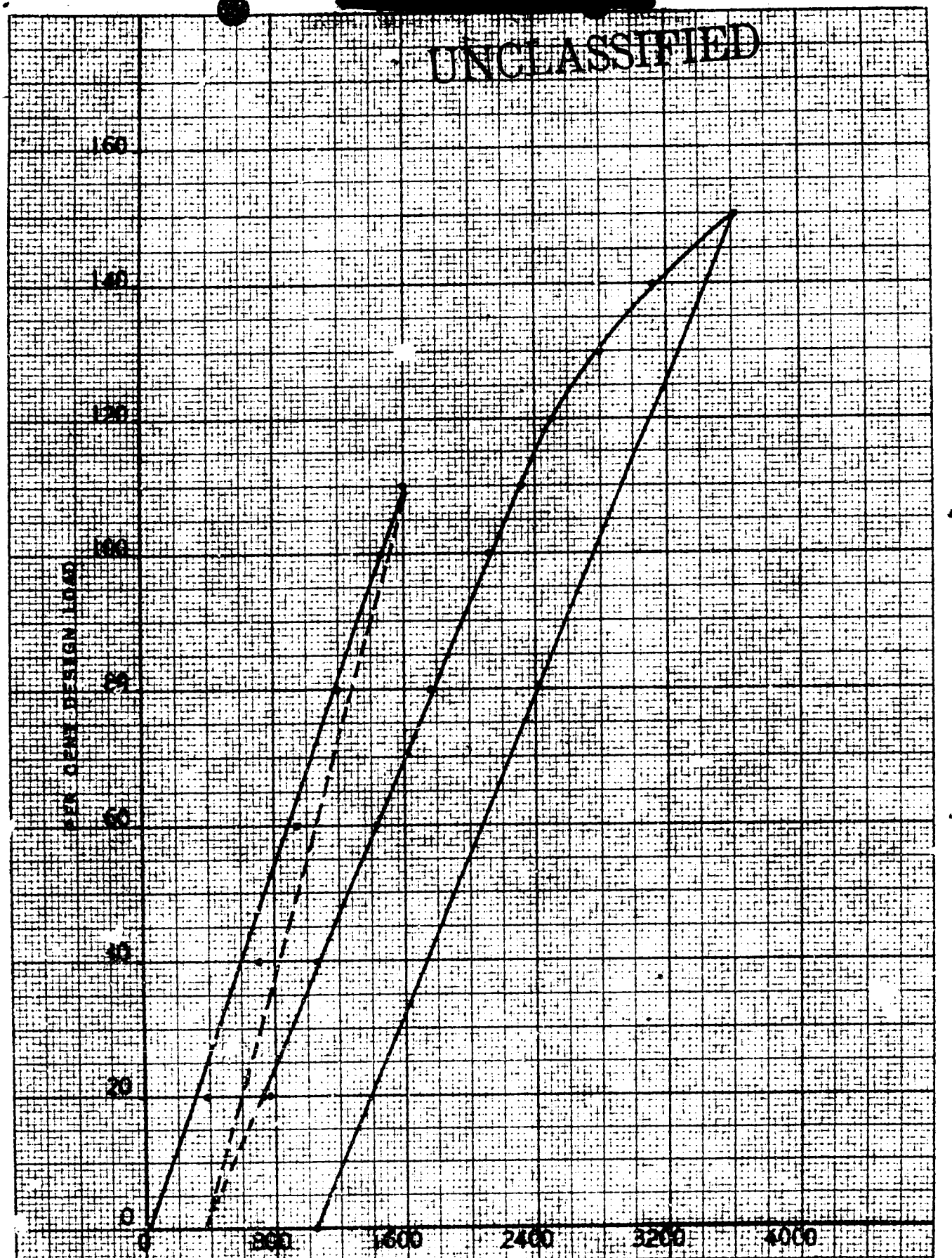


FIG. 2 -- LOAD VS. STRAIN CURVE FOR STRAIN GAGE NO. 1 -- STATIC TEST OF TX-28/X2 FORWARD CASE SECTION.

EUGENE DIETZGEN CO. MADE IN U.S.A.
NO. 340R-20 DIETZGEN GRAPH PAPER 20 X 20 PER INCH



UNCLASSIFIED

TABLE I

STRAINS - MICROINCHES PER INCH
STATIC TEST OF TX-28/X2 FORWARD CASE

| Per Cent Design Load | Load "A" Pounds | Load "B" Pounds | Strain Gage Element Number 1 | 2 | 3 | 4 | 5 | 6 |
|---|---|---|---|---|---|---|---|---|
| 0 | 0 | 0 | 0 | 0 | 0 | 0 | 0 | 0 |
| 20 | 497 | 339 | 380 | 180 | 215 | 160 | 80 | 20 |
| 40 | 993 | 679 | 705 | 315 | 370 | 320 | 150 | 40 |
| 60 | 1490 | 1018 | 945 | 430 | 495 | 425 | 240 | 65 |
| 80 | 1986 | 1358 | 1200 | 530 | 625 | 555 | 330 | 95 |
| 100 | 2483 | 1697 | 1465 | 605 | 830 | 700 | 410 | 115 |
| 110 | 2731 | 1867 | 1600 | 630 | 950 | 740 | 460 | 125 |
| 0 | 0 | 0 | 80 | -220 | 70 | -60 | 70 | 0 |
| 20 | 497 | 339 | 770 | 800 | -150 | 95 | 160 | 40 |
| 0 | 0 | 0 | - - - - - Did not read gages- - - - - - | | | | | |
| 20 | 497 | 339 | 730 | 665 | -45 | 190 | 135 | 55 |
| 40 | 993 | 679 | 1060 | 890 | 135 | 325 | 200 | 80 |
| 60 | 1490 | 1018 | 1430 | 1145 | 310 | 430 | 260 | 100 |
| 80 | 1986 | 1358 | 1760 | 1400 | 475 | 535 | 320 | 110 |
| 100 | 2483 | 1697 | 2120 | 1650 | 630 | 590 | 350 | 115 |
| 110 | 2731 | 18[illegible] | 2320 | 1755 | 710 | 615 | 355 | 120 |
| 120 | 2980 | 2036 | 2500 | 1830 | 820 | 635 | 360 | 115 |
| 130 | 3228 | 2206 | 2800 | 1950 | 980 | 650 | 380 | 120 |
| 140 | 3476 | 2376 | 3120 | 2100 | 1150 | 680 | 390 | 125 |
| 150 | 3725 | 2546 | 3615 | 2375 | 1330 | 705 | 425 | 125 |
| 0 | 0 | 0 | 1070 | 380 | 145 | -130 | -50 | -20 |

NOTES: (+) indicates a tensile strain.
(-) indicates a compressive strain.

Strain gages No. 1 and 3 were mounted circumferentially.
Strain gages No. 4 and 6 were mounted longitudinally.

TABLE II

PRINCIPAL STRESSES - PSI
STATIC TEST OF TX-28/X2 FORWARD CASE

| Per Cent Design Load | Load Point A (Gages 1, 2, and 3) | | Load Point B (Gages 4, 5, and 6) | |
|---|---|---|---|---|
| | Su | Sv | Su | Sv |
| 0 | 0 | 0 | 0 | 0 |
| 20 | 5,850 | 3,610 | 1,980 | 890 |
| 40 | 10,720 | 6,380 | 3,980 | 1,740 |
| 60 | 14,300 | 8,590 | 5,300 | 2,490 |
| 80 | 18,240 | 10,780 | 6,960 | 3,380 |
| 100 | 23,130 | 13,360 | 8,760 | 4,200 |
| 110 | 25,890 | 14,650 | 9,290 | 4,470 |
| 0 | 3,500 | 1,110 | 330 | -1,290 |
| 20 | 10,160 | 310 | 1,830 | 320 |
| 0 | -- | -- | -- | -- |
| 20 | 9,400 | 1,500 | 2,480 | 1,410 |
| 40 | 13,770 | 5,240 | 4,180 | 2,260 |
| 60 | 18,690 | 8,970 | 5,500 | 2,930 |
| 80 | 23,230 | 12,300 | 6,790 | 3,470 |
| 100 | 28,030 | 15,690 | 7,460 | 3,750 |
| 110 | 30,650 | 17,530 | 7,780 | 3,910 |
| 120 | 33,060 | 19,730 | 8,000 | 3,930 |
| 130 | 37,160 | 22,940 | 8,190 | 4,060 |
| 140 | 41,500 | 26,400 | 8,570 | 4,230 |
| 150 | 48,240 | 30,390 | 8,860 | 4,330 |
| 0 | 13,670 | 5,650 | -730 | -1,660 |

(+) indicates a tensile stress.
(-) indicates a compressive stress.