UNCLASSIFIED [redacted] 0722

SANDIA SYSTEMATIC DECLASSIFICATION REVIEW
1st Review Date: 8/11/98
Authority: ADD
Name: P B Cramer
2nd Review Date: 8/25/98
Authority: ADD
Name: W Layne
Determination (Circle Number):
1. Classification Retained
2. Classification Changed to: U
3. Contains No DOE Classified Information
4. Coordinate With:
5. Contains UCAI? NO
6. Comments: Declassify

JUN 4 1957
Case No. 690.00
Ref. Sym: 1612 (465)
Project No. TM-528
File: TX-28, 3-2

MR. S. A. MOORE - 1224

Attn: Mr. E. R. Stepka - 1224-2

Re: Static Test of TX-28 Case and Fins

CDL No.
ACCOUNTABILITY CARD BM
FILE No. TX-28 3-2

RECEIVED
JUN 6 1957
R & D FILES

Summary of Results

Two TX-28 fins (XMC-867) were tested to destruction while mounted on a TX-28 case (MC-710). The applied loads simulated air resistance loads on the fins. The fin mounting brackets fractured at 260 per cent limit load (6300 pounds per fin).

Deflections were measured along the outboard edges of the fins. Maximum deflections at 200 per cent limit load, corrected for rotation and deflection of the case, were 0.298 and 0.616 inch, respectively, at the rear and forward edges of the fin.

Object of Test

The object of the test was to determine load-deflection data and ultimate load capacity of TX-28 fins (XMC-867) when mounted on the TX-28 case (MC-710).

Reason for Test

The test was requested in a Work Order Authorization from Mr. S. A. Moore, 1224, to Mr. P. H. Adams, 1612, dated February 13, 1957.

Function of Object Tested

The TX-28 fins serve to stabilize the weapon in flight.

Summary of Past Tests

The TX-28 shape was subjected to simulated Douglas Aero 7A ejector loads as reported in a memorandum, Simulated Flight Test of TX-28 Shape with Dynamic Balance, Ref. Sym: 1612 (312), Project No. TM-378, dated April 12, 1956. No indication of yield was observed at 100 per cent design limit load.

The TX-28 front case and fin were subjected to simulated air resistance loads as reported in a memorandum, Static Test of TX-28 (Internally-Carried Version) Front Case and Fin, Ref. Sym: 1612 (316), Project No.

SANDIA SYSTEMATIC DECLASSIFICATION REVIEW
DOWNGRADING OR DECLASSIFICATION STAMP
CLASSIFICATION CHANGED TO: U
AUTHORITY: W C Layne
Emelda Selph 8/26/98
PERSON CHANGING MARKING & DATE
RECORD ID: 98SN3793
W C Layne 8/26/98
PERSON VERIFYING MARKING & DATE
DATED: 8/20/98

[redacted] (1)

UNCLASSIFIED

TM-382, dated April 18, 1956. Both the case and fin withstood a maximum of 150 per cent design limit load without indication of failure or yield.

The TX-28 front case was subjected to one simulated ejection condition of 200 per cent design limit load and two free fall conditions of 150 per cent design limit load as reported in a memorandum, Static Test of TX-28 Front Case, Ref. Sym: 1612 (355), Project No. TM-421, dated August 15, 1956. The case withstood the test conditions without visible damage. Stresscoat data indicated maximum tensile stresses of approximately 15,000 psi at 150 per cent design limit load for the ejection condition.

The TX-28 front case and fin were subjected to simulated air resistance loads of 150 per cent design limit load as reported in a memorandum, Static Test of TX-28 (Internally-Carried Version) Front Case and Fin, Ref. Sym: 1612 (356), Project No. TM-422, dated August 1, 1956. Local yielding was observed around one mounting bracket in the fin. No evidence of damage to the case was observed. Maximum deflections observed were 0.578 inch on the forward outboard edge and 0.229 on the rear outboard edge of the fin.

The TX-28 front case (MC-710) was cantilever mounted and subjected to combined lateral and longitudinal loads simulating those encountered in retarded fall as reported in a memorandum, Static Test of TX-28 Forward Case Ref. Sym: 1612 (417), Project No. TM-481, dated April 23, 1957. Maximum deflection measured was 1.570 inches, in a direction parallel to the lateral loads, at a point 2.75 inches from the free end of the case at 200 per cent limit load. The rivets connecting the case to the mounting ring sheared at 280 per cent limit load.

Setup for Test

I. Figures 1 and 2 are photographs depicting the general test setup. Figure 3 is a sketch showing location of loads on the fin.

II. The following components were tested:

1. Two TX-28 fins (XMC-867) mounted on a TX-28 case section (MC-710).

III. The following equipment was used in the test:

1. One Simplex hydraulic ram, capacity 30 tons.
2. One Simplex hydraulic ram, capacity 60 tons.
3. Two Blackhawk hydraulic pumps.
4. Baldwin load cell No. 658, capacity 10,000 pounds, sensitivity 1 pound per microinch per inch at a sensitivity box setting of 1.71 and a gage factor setting of 2.00.

5. Baldwin load cell No. 6049, capacity 10,000 pounds, sensitivity one pount per microinch per inch at a sensitivity box setting of 3.68 and a gage factor setting of 2.000.

6. Two Baldwin SR-4 strain indicators, Serial No. 391904 and 391902.

IV. The following instrumentation was used in the test:

1. Seven Starrett dial indicators, range one inch, division 0.001 inch.

Figure 4 is a photograph depicting location of dial indicators. Figure 5 is a sketch of the same.

Procedure

The fins and case were Stresscoated in the vicinity of the mounting brackets and mounted as shown in Figs. 1 through 3. Dial indicators were mounted along the outboard edge of the fins and at the free end of the case as shown in Figs. 4 and 5. The fins were each loaded at two points as shown in Fig. 3. Loads were applied in increments listed in Table I to 200 per cent limit load. The deflections indicated by the dial indicators were recorded at each increment. The load was relaxed after each increment through 107.5 per cent limit load, at which time the Stresscoat patterns were marked and the permanent deformations recorded.

The dial indicators were removed at 200 per cent limit load and the loading continued until failure occurred. No attempt was made to statiflux and photograph the Stresscoat cracks since the patterns were obliterated in the pertinent areas when the fins failed.

Tensile test specimens were cut from the forward tips of the fins (Figs. 6 and 7) and tested to destruction in the 120,000 pound Baldwin testing machine.

Results

The fins failed when the mounting brackets fractured at 260 per cent limit load (6300 pounds per fin) as shown in Figs. 8 through 10. Maximum fin deflections observed at 200 per cent limit load, corrected for rotation and deflection of the case, were 0.298 and 0.616 inch at the rear and forward outboard edges, respectively, of the fins. The load deflection data are listed in Tables I through III and plotted in Fig. 11. The computations and assumptions used in correcting the fin deflections for rotation and deflection of the case are illustrated in the appendix.

JUN 4 1957
Ref. Sym: 1612 (465)
Project No. TM-528

The tensile specimens cut from the fins indicated ultimate strengths of 49,500 and 46,500 psi with extensions of 8.6 and 2.85 per cent, respectively. The fractured specimens are depicted in Figs. 6 and 7. The stress-strain curves are plotted in Fig. 12.

Conclusions

The TX-28 fins (XMC-867) and case (MC-710) are structurally adequate to sustain air loads on the fins in excess of 200 per cent limit load.

R. I. Butler
R. I. BUTLER - 1612-2

Approved by: P. H. Adams
P. H. ADAMS - 1612

RIB:1612-2:as

Copy to:
W. A. Gardner, 1610
D. M. Bruce, 1282
C. L. Gomel, 5523
R. K. Smeltzer, 7221-3
Tech. Ref. File, 7221-3

#726

[redacted]

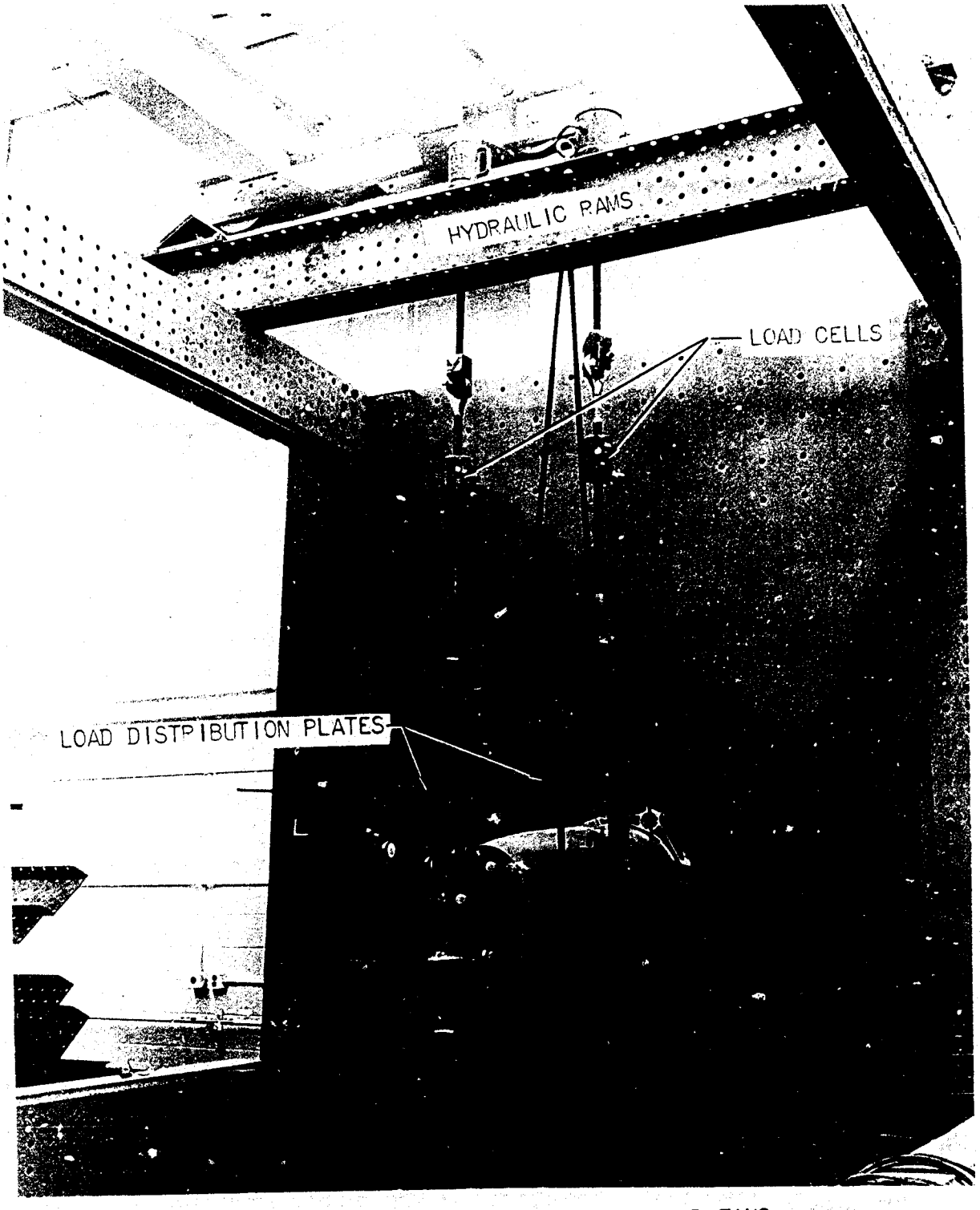

FIG. 1 -- TEST SETUP FOR STATIC TEST OF TX-28 CASE AND FINS.

REF. SYM: 1612 (465)
PROJECT NO. TM-528

D# 89776

[redacted]

[redacted]

#727

FIG. 2 -- TEST SETUP FOR STATIC TEST OF TX-28 CASE AND FINS.

REF. SYM: 1612 (465)
PROJECT NO. TM-528

D# 89778

[redacted]

#728

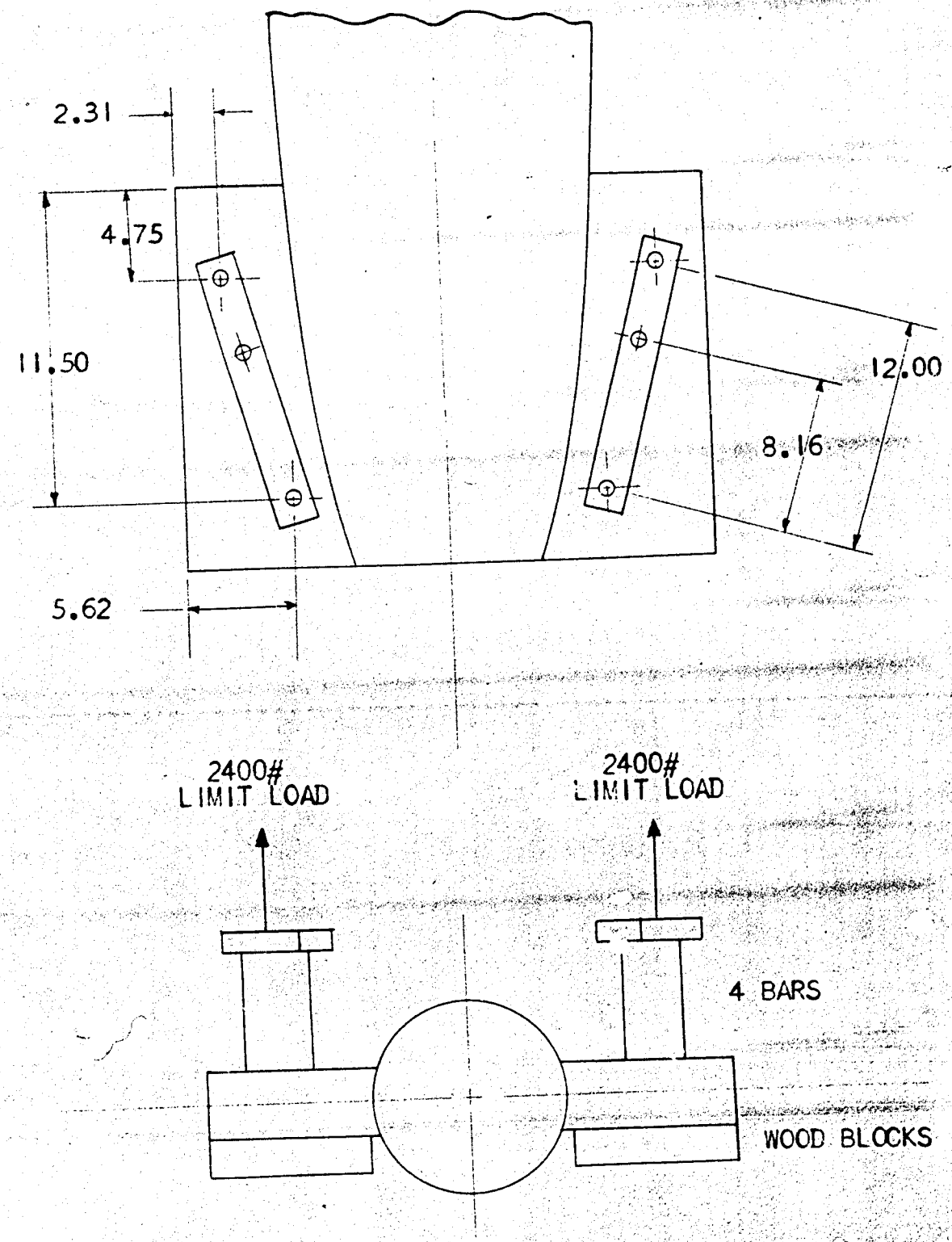

FIG. 3 -- LOCATION OF LOADS -- STATIC TEST OF TX-28 CASE AND FINS.

REF. SYM: 1612 (465)
PROJECT NO. TM-528

[redacted]

#129

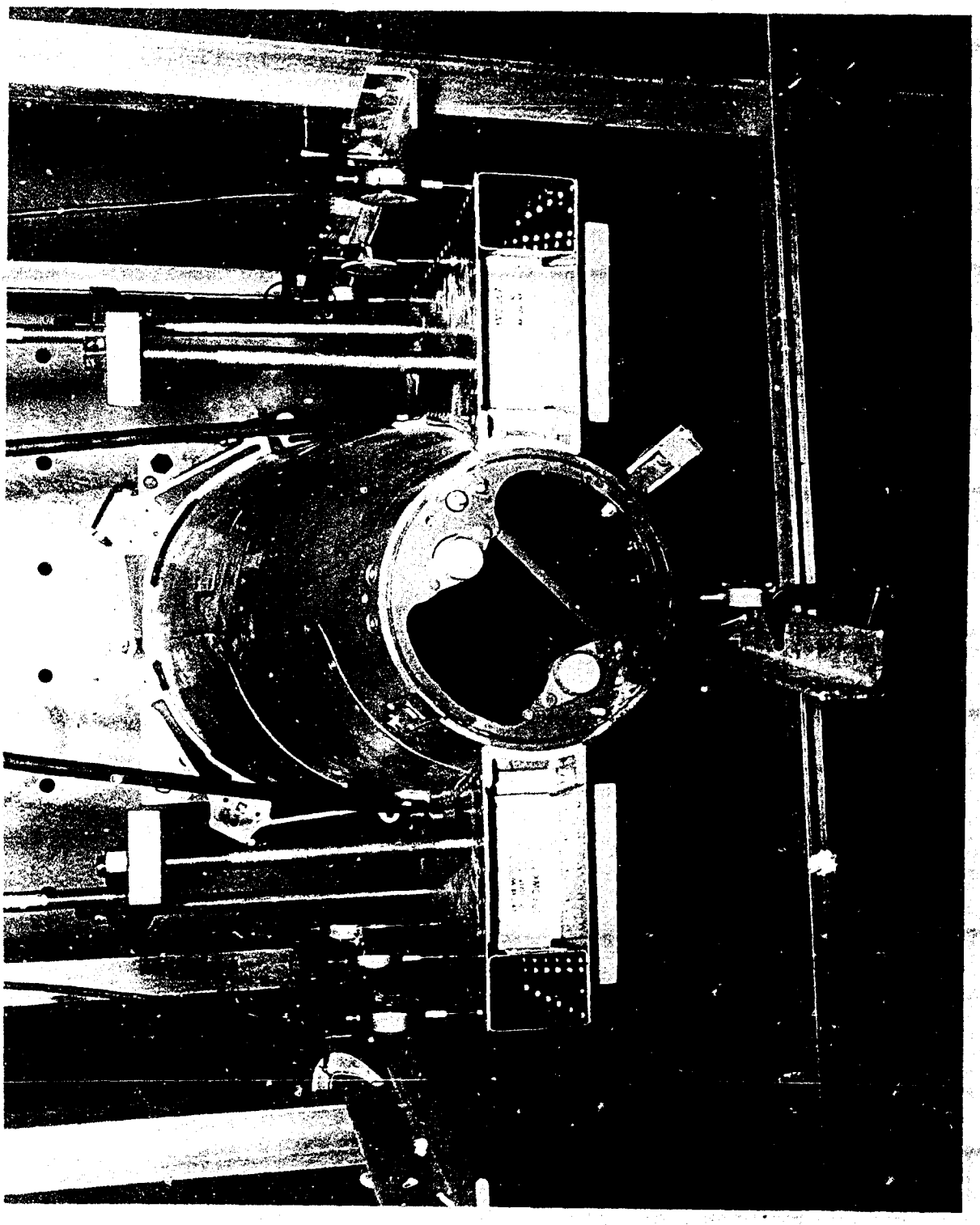

FIG. 4 -- LOCATION OF DIAL INDICATORS -- STATIC TEST OF TX-28 CASE AND FINS.

REF. SYM: 1612 (465)
PROJECT NO. TM-528

D# 89780

[redacted]

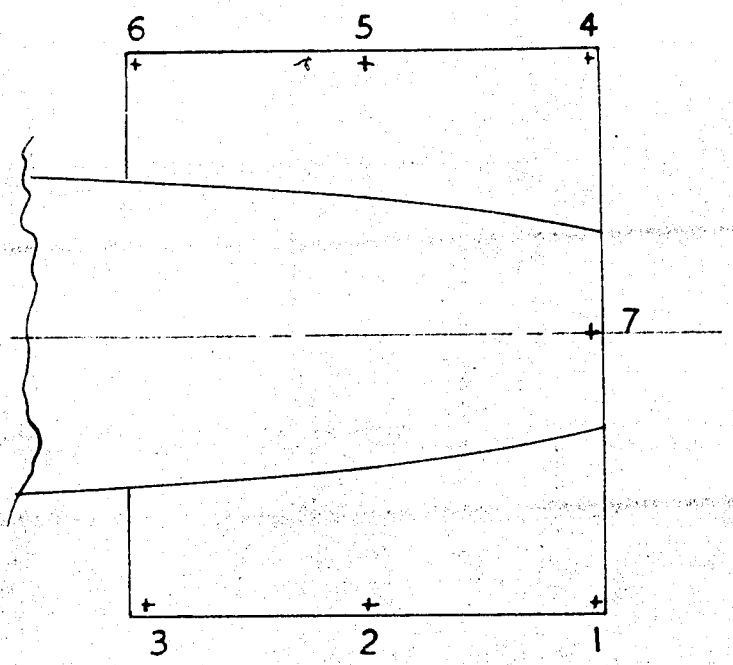

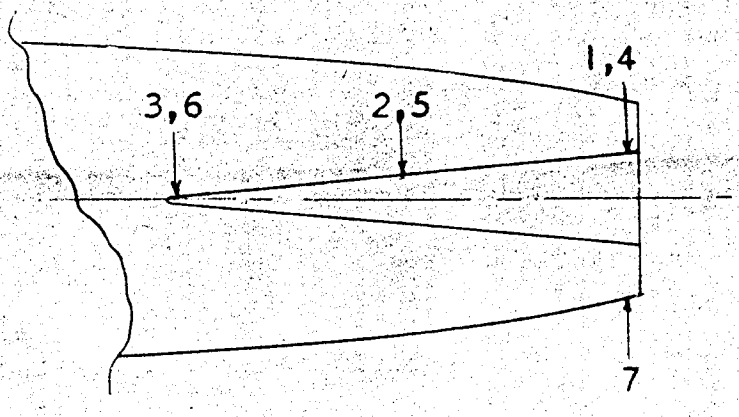

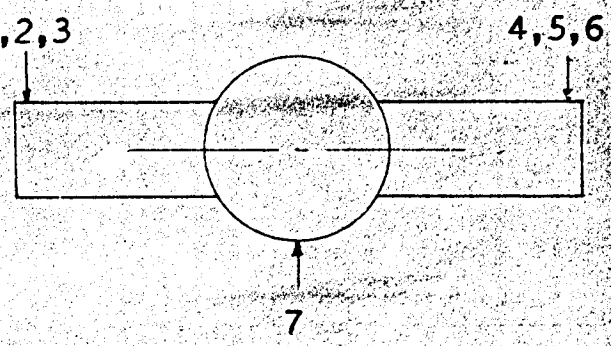

FIG. 5 -- LOCATION AND ORIENTATION OF DIAL INDICATOR -- STATIC TEST OF TX-28 CASE AND FINS.

#731

FIG. 6 -- LOCATION AND MODE OF FAILURE OF TENSILE BAR CUT FROM FIN -- STATIC TEST OF TX-28 CASE AND FINS.

REF. SYM: 1612 (465)

D# 880551

#732

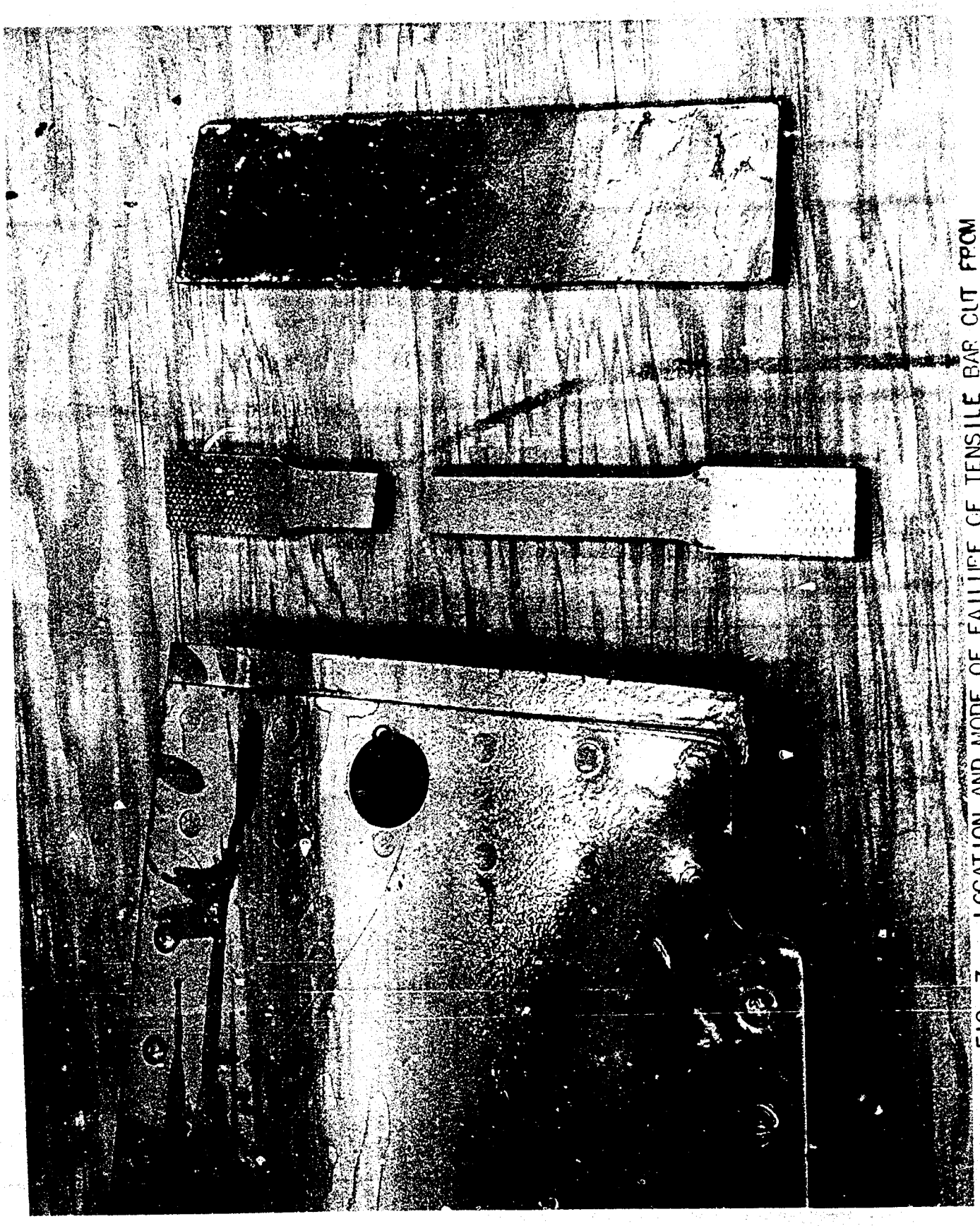

FIG. 7 -- LOCATION AND MODE OF FAILURE OF TENSILE BAR CUT FROM FIN -- STATIC TEST OF TX-28 CASE AND FINS.

REF. SYM: 1612 (465)
PROJECT NO. TM-528

D#80052

[redacted]

#733

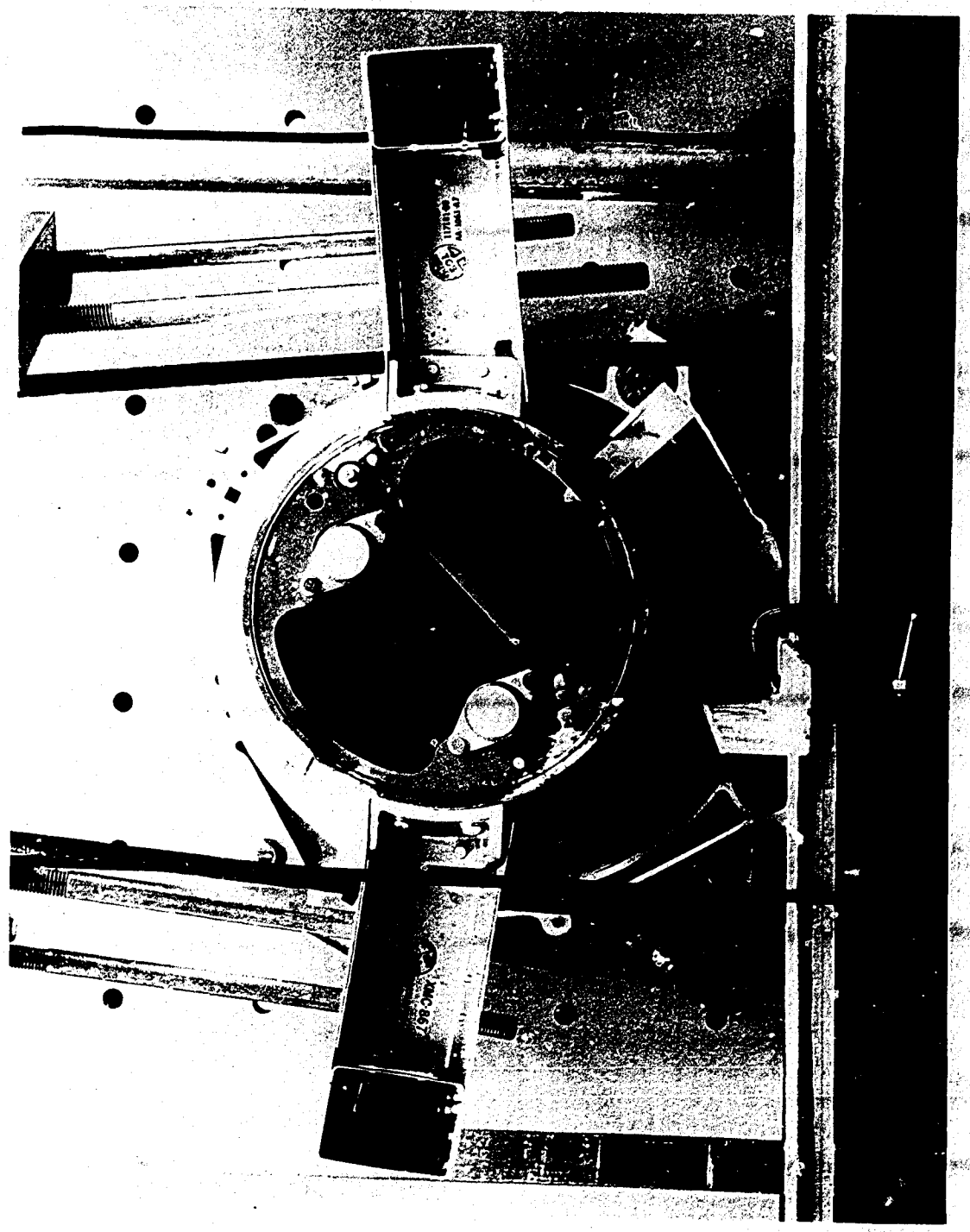

FIG. 8 -- FAILURE OF FINS -- STATIC TEST OF TX-28 CASE AND FINS.

REF. SYM: 1612 (465)
PROJECT NO. TM-528

D#89779

[redacted]

[redacted]

734

FIG. 9 -- FAILURE OF TX-28 FINS -- STATIC TEST OF TX-28 CASE AND FINS.

REF. SYM: 1612 (465)
PROJECT NO. TM-528

D# 89777

[redacted]

[redacted]

#735

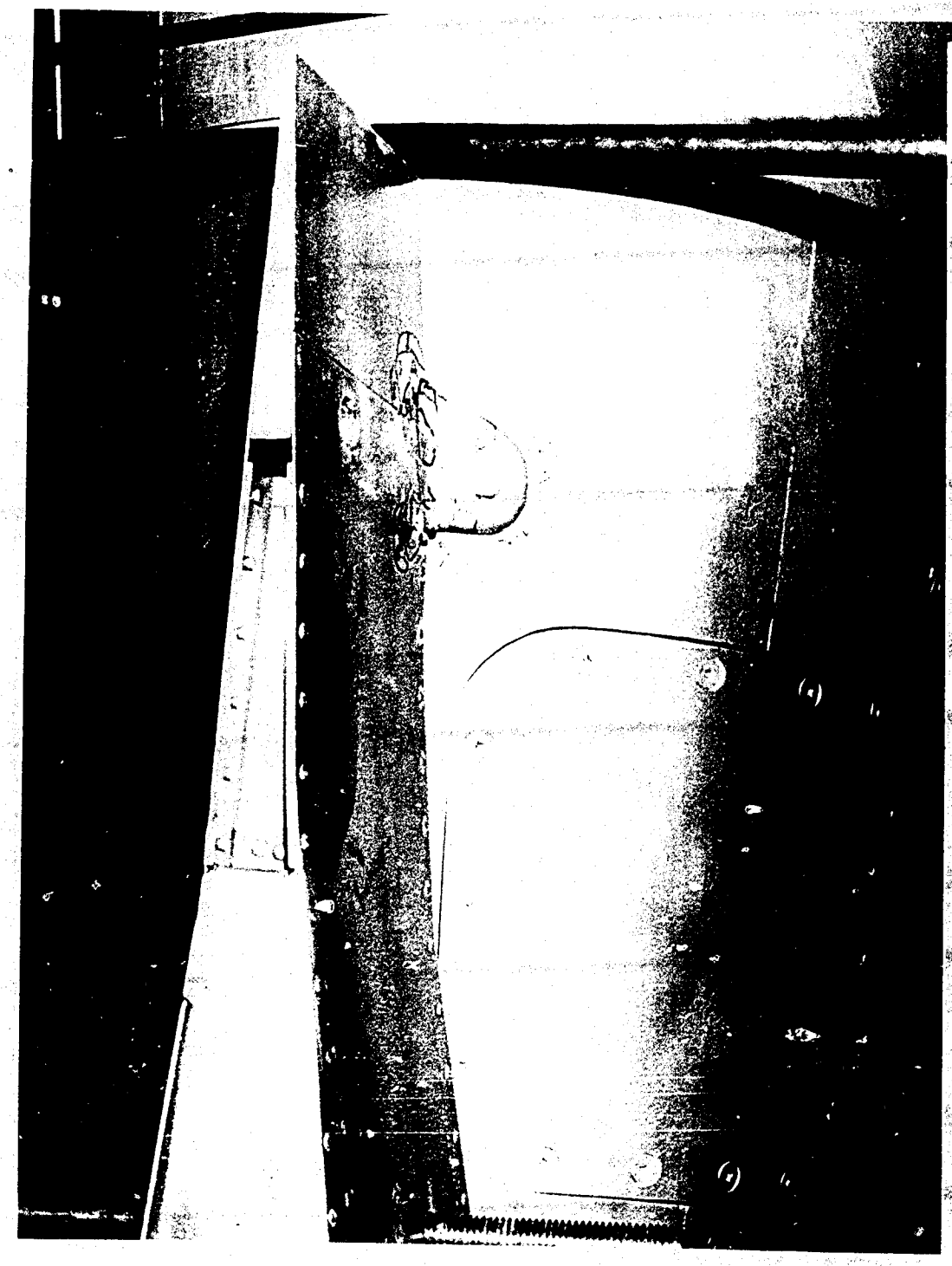

FIG. 10 -- FAILURE OF TX-28 FINS -- STATIC TEST OF TX-28 CASE AND FINS.

REF. SYM: 1612 (465)
PROJECT NO. TM-528

D# 89781

[redacted]

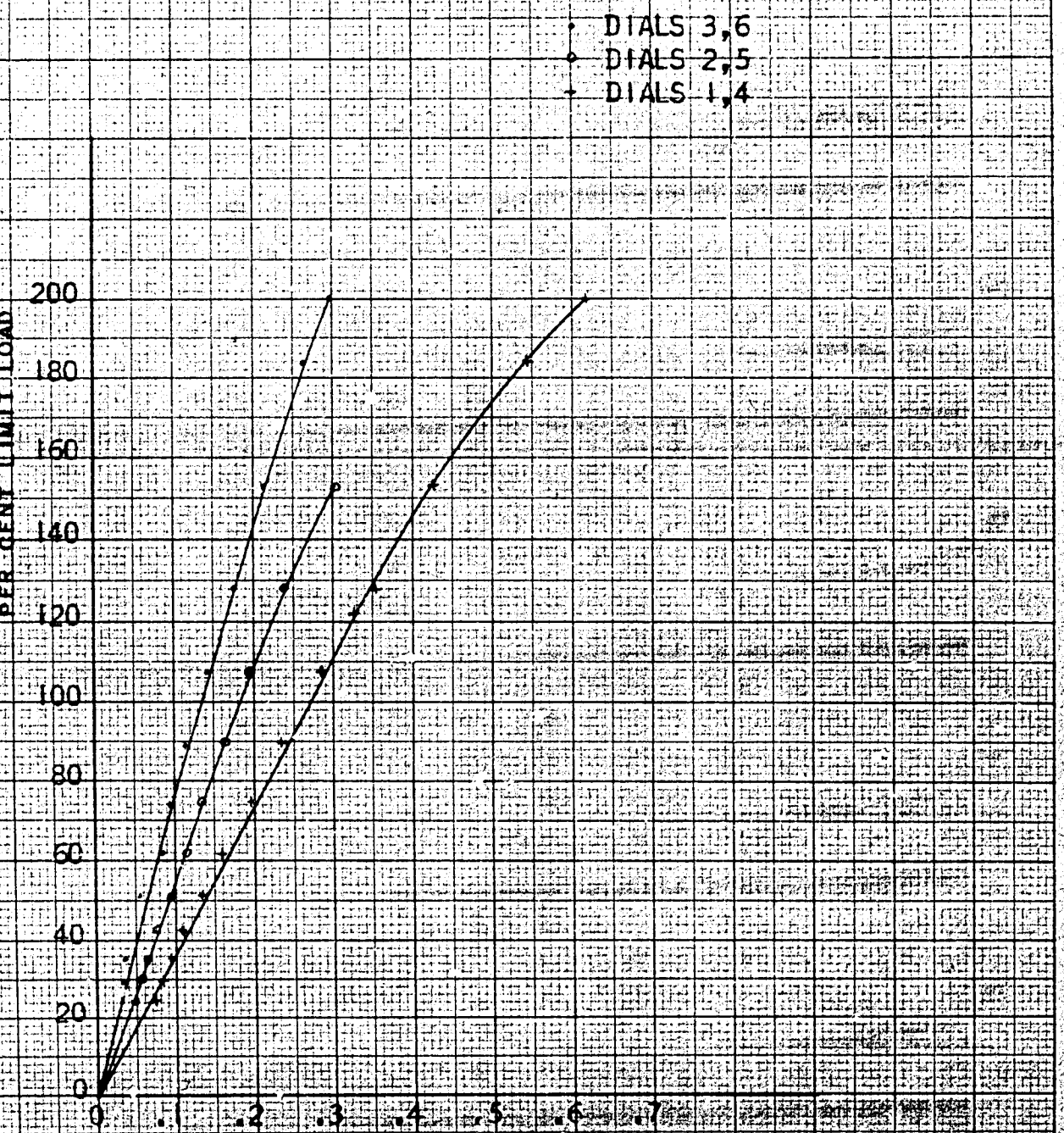

FIG. 11 -- LOAD VS. DEFLECTION -- STATIC TEST OF TX-28 CASE AND FINS.

REF. SMT 1612 (465)

K&E 10 X 10 TO THE ½ INCH 359-11 KEUFFEL & ESSER CO. MADE IN U.S.A.

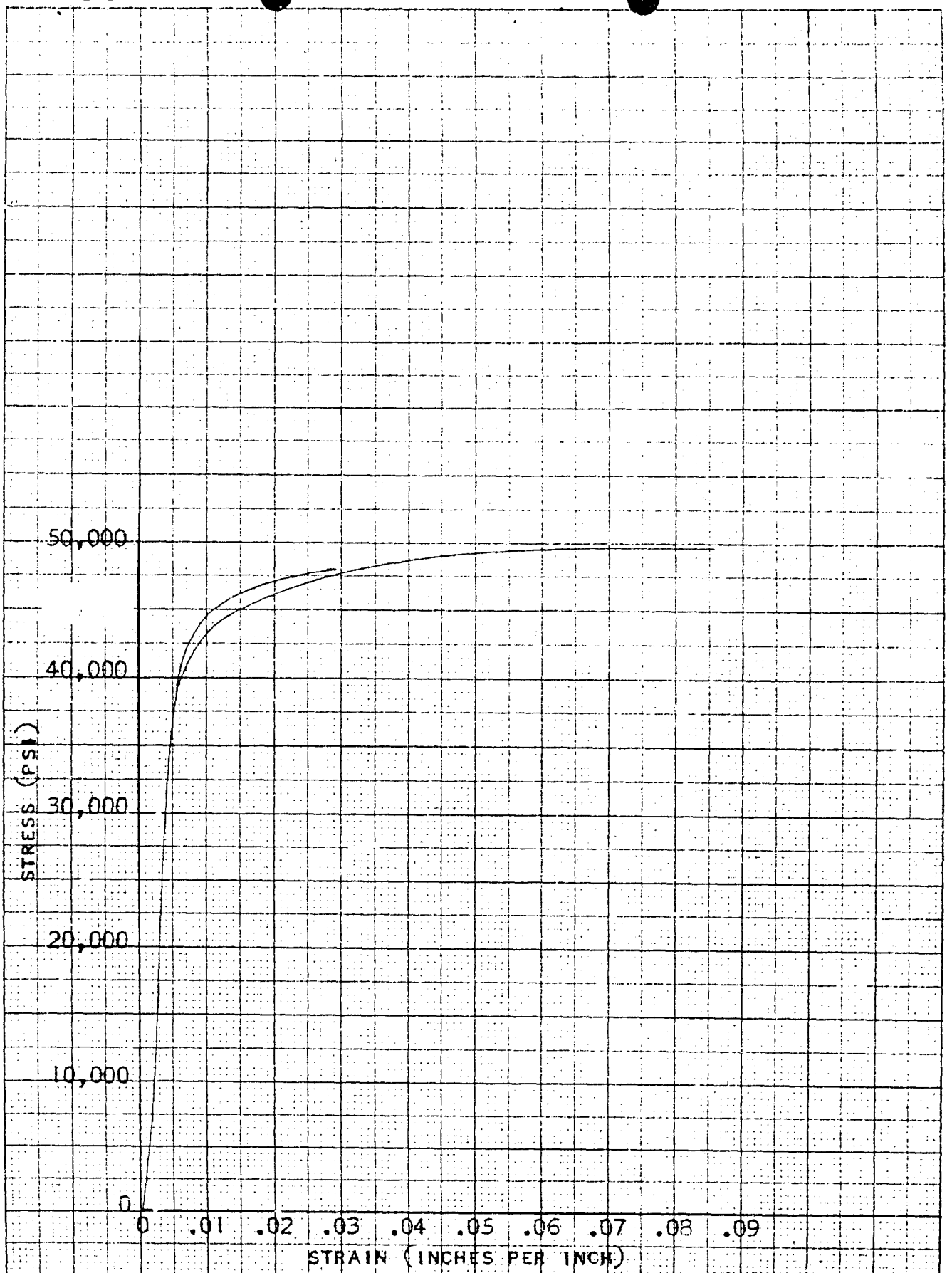

FIG. 12 -- STRESS-STRAIN CURVES FOR TENSILE SPECIMENS CUT FROM FINS -- STATIC TEST OF TX-28 CASE AND FINS.

REF. SYM: 1612 (465)
PROJECT NO. TM-528

10 X 10 TO THE ½ INCH 359-11 KEUFFEL & ESSER CO.

TABLE I

LOAD-DEFLECTION DATA -- DIALS 1, 4

Static Test of TX-28 Case and Fins

Load		Deflection (Inch)									
	Pounds	Dial 1		Dial 4		Average		5/16 D7		*Corrected	
Per Cent	Per Fin	Defl.	Set	Defl.	Set	Defl.	Set	Defl.	Set	Defl.	Set
0	0	0	0	0	0	0	0	0	0	0	0
24.8	600	.209	.137	.003	-.022	.106	.058	.034	.024	.072	.034
29.8	721	.225	.143	.016	-.029	.121	.057	.038	.026	.083	.031
35.8	866	.240	.152	.030	-.032	.135	.060	.042	.023	.093	.037
43.0	1040	.262	.158	.042	-.031	.152	.063	.049	.023	.103	.040
51.7	1250	.242	.130	.126	.005	.184	.067	.052	.022	.132	.045
62.0	1500	.295	.150	.138	.004	.217	.077	.058	.023	.159	.054
74.4	1800	.333	.159	.186	.021	.260	.090	.064	.024	.196	.066
89.4	2160	.427	.202	.184	-.004	.306	.099	.071	.025	.235	.074
107.5	2600	.465	.212	.259	-.026	.362	.119	.080	.028	.282	.091
128	3100	.558		.322		.440		.089		.351	
153	3700	.642		.418		.530		.104		.426	
184	4450	.777		.550		.664		.123		.541	
200	4840	.865		.638		.752		.136		.616	

* Corrected values -- average of 1 and 4.
Minus 5/16 D7 -- See Appendix.

[redacted]

UNCLASSIFIED

Ref. Sym: 1612 (465)
Project No. TM-528

TABLE II

LOAD-DEFLECTION DATA -- DIALS 2, 5

Static Test of TX-28 Case and Fins

Load		Deflection (Inch)									
	Pounds	Dial 2		Dial 5		Average		45/64 D7		*Corrected	
Per Cent	Per Fin	Defl.	Set	Defl.	Set	Defl.	Set	Defl.	Set	Defl.	Set
0	0	0	0	0	0	0	0	0	0	0	0
24.8	600	.238	.128	.029	.003	.133	.066	.085	.054	.048	.012
29.8	721	.256	.156	.043	-.012	.150	.072	.096	.058	.054	.014
35.8	866	.274	.167	.057	-.013	.166	.077	.102	.052	.064	.025
43.0	1040	.296	.175	.077	-.013	.186	.081	.111	.052	.075	.029
51.7	1250	.276	.145	.150	.022	.213	.083	.118	.049	.095	.034
62.0	1500	.321	.164	.161	.020	.241	.092	.130	.052	.111	.040
74.4	1800	.355	.166	.200	.031	.278	.098	.144	.054	.134	.044
89.4	2160	.445	.217	.195	.001	.320	.109	.159	.056	.161	.053
107.5	2600	.483	.217	.263	.028	.373	.122	.179	.062	.194	.060
128	3100	.558		.320		.439		.201		.238	
153	3700	.645		.428		.536		.232		.304	
184**	4450	--		--		--					
200	4840	--		--							

* Corrected values -- average of 2 and 5.
Minus 45/64 D7 -- See Appendix.

** Dials out of travel.

UNCLASSIFIED

[redacted]

TABLE III

LOAD-DEFLECTION DATA -- DIALS 3, 6

Static Test of TX-28 Cage and Fins

Load		Deflection (Inch)									
		Dial 3		Dial 6		Average		D7		*Corrected	
Per Cent	Pounds Per Fin	Defl.	Set	Defl.	Set	Defl.	Set	Defl.	Set	Defl.	Set
0		0	0	0	0	0	0	0	0	0	0
24.8	600	.251	.160	.053	.007	.152	.082	.120	.076	.032	.007
29.8	721	.271	.165	.070	.002	.170	.083	.137	.083	.033	.010
35.8	866	.295	.174	.087	.001	.191	.088	.145	.073	.036	.015
43.0	1040	.319	.180	.107	.002	.213	.091	.157	.073	.056	.018
51.7	1250	.288	.145	.112	.035	.220	.090	.167	.069	.053	.021
62.0	1500	.342	.164	.194	.032	.268	.098	.185	.074	.083	.024
74.4	1800	.367	.164	.231	.041	.299	.102	.205	.077	.094	.025
89.4	2160	.454	.202	.227	.009	.341	.105	.226	.080	.115	.025
107.5	2600	.492	.208	.297	.034	.395	.121	.255	.088	.140	.033
128	3100	.564		.353		.458		.285		.173	
153	3700	.451		.437		.544		.331		.213	
184	4450	.765		.540		.652		.390		.262	
200	4840	.843		.616		.730		.432		.298	

* Corrected values -- Average of 3 and 6.
Minus D7 -- See Appendix.

[redacted]

UNCLASSIFIED

APPENDIX

CORRECTION OF DIAL INDICATOR READINGS FOR ROTATION AND DEFLECTION OF THE CASE.

(A) ROTATION: AVERAGE DIAMETRICALLY OPPOSITE DIALS, I.E., 1 AND 4, 2 AND 5, 3 AND 6. REFER TO SKETCH BELOW.

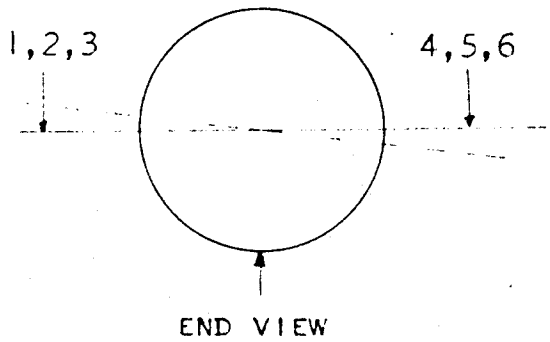

(B) DEFLECTION: ASSUME ELASTIC CURVE OF CANTILEVER BEAM LOADED AT END. DEFLECTIONS ATTRIBUTABLE TO DEFLECTION OF CASE ARE AS SHOWN BELOW.

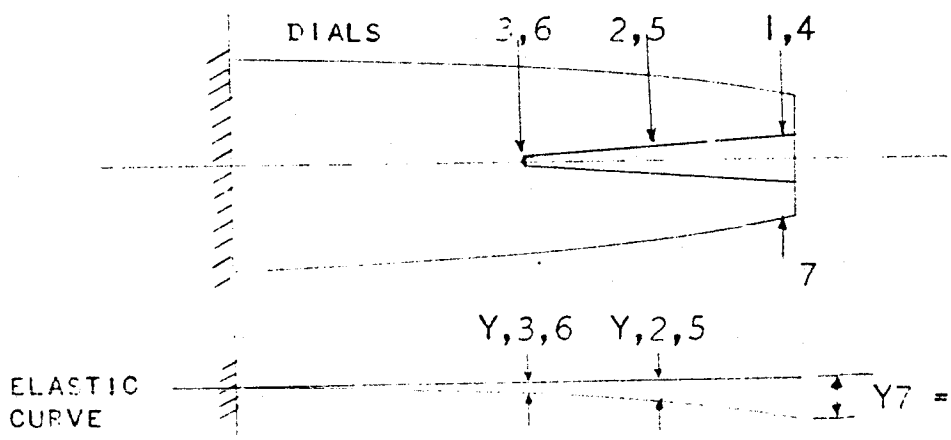

$Y7 = Y1,4$

$Y2,5 = \frac{45}{64} Y7$

$Y3,6 = \frac{5}{16} Y7$

UNCLASSIFIED

REF. SYM: 1612 (465)
PROJECT NO. TM-528

[redacted]