[redacted]

SANDIA SYSTEMATIC DECLASSIFICATION REVIEW
1st Review Date: 8/11/98
Authority: ADD
Name: R B Cramer
2nd Review Date: 8/20/98
Authority: ADD
Name: W Loya
Determination (Circle Number(s)):
1. Classification Retained
2. Classification Changed to: U
3. Contains No DOE Classified Information
4. Coordinate With:
5. Contains UCNI
6. Comments:
OK for Openet

FEB 13 1958
Case No. 690.00
Ref. Sym: 1612 (456)
Project No. TM-520
File: TX-28, 3-2

UNCLASSIFIED

MR. W. J. DENISON - 1224

Attn: Mr. W. W. Joseph - 1222

Re: TX-28 Lug and Sway Brace Test

CDL No.
Accounting
Date
BM
File: TX-28
3-2

RECEIVED
FEB 7 1959
R & D FILES

Summary of Results

Three TX-28 cases, each of a different design, were tested under various conditions simulating air and inertia loadings encountered in three flight conditions, arrested landing, and catapult. The first TX-28 case, a 14ST-6 forging, Dwg. No. SK(1326)50245, was statically tested to simulate the three flight conditions, an arrested landing condition, and a catapult condition and the forward lug failed at 140 per cent design limit load in the test simulating the catapult condition with the forward lug taking the entire thrust load. The aft lug pulled out at a load of 54,300 pounds straight tension load. This case withstood all conditions of loading to 150 per cent or higher except the catapult condition with the forward lug resisting the entire thrust.

INVENTORIED
MAR 2 1959
BY ORG. 4722

The second TX-28 case, a 75ST-6 forging, Dwg. No. 125293, was tested to simulate the catapult condition with the forward lug taking all the thrust load. The forward lug tilted over in the case partially stripping the threads in the aluminum at 145 per cent design limit load. This tilting allowed part of the thrust loading to be absorbed by the aft lug and the test was continued to 165 per cent design limit load without further incident. This case successfully withstood 200 per cent design limit load when tested to a flight condition.

INVENTORIED
SEP 14 '65
3428-3

The third TX-28 case, which was a mild steel case, Dwg. No. DS(1326)52283, when tested to simulate the catapult condition with the forward lug resisting all the thrust load, the metal in the case entered the plastic range at approximately 80 per cent design limit load. This case also entered the plastic range at approximately 100 per cent when tested to one flight condition with the forward lug taking the thrust load.

The case deformation in all these tests was felt by the consultant to be insignificant.

INVENTORIED
AUG 6 1964
3427-1

Object of Test

The object of this test was to perform static tests on the three TX-28 case sections and lugs, the first a 14ST-6 forging, the second a 75ST-6 forging

SANDIA SYSTEMATIC DECLASSIFICATION REVIEW
DOWNGRADING OR DECLASSIFICATION STAMP
CLASSIFICATION CHANGED TO: U
AUTHORITY: W. C. Layne
Emelda Selph 8/25/98
PERSON CHANGING MARKING & DATE
RECORD ID: 98SN3796
W C Layne 8/26/98
PERSON VERIFYING MARKING & DATE
DATED: 8/20/98

[redacted]

UNCLASSIFIED

[redacted]

and the third a mild steel case, to simulate the flight conditions listed in Table I.

Reason for Test

This test was authorized in a Work Order Authorization from Mr. S. A. Moore, 1224, to Mr. E. White, 1612-2, dated February 6, 1957.

Summary of Past Tests

The following static tests that pertain to this test have been performed on the TX-28 by Division 1612.

A TX-28 test cylinder was tested statically and the results of this test are stated in a report from H. P. Wheeler, 1612-2, to S. A. Moore, 1326, dated December 5, 1955, Ref. Sym: 1612 (241), Project No. TM-372. The "Summary of Results" follows:

> "The test cylinder, which had been designed to simulate one possible configuration near the aft lug of the TX-28 store, was statically tested to eight separate loading conditions plus a final loading to failure. The eight loading conditions, five of which were 115 per cent of design limit load, and three of which were 150 per cent of design limit load, produced no noticeable damage to the test article. Near the end of testing, a modified version of one of the latter three conditions was extended to 210 per cent of design limit load without producing failure. The loading condition which produced failure of the threads on the lug and in the cylinder consisted of a vertical lug load (up) of 53,520 pounds (230 per cent of limit load) and a sway brace load of about 80,000 pounds (about 225 per cent of limit load). Maximum and minimum principal strain data was obtained at critical points on the cylinder."

A TX-28 mockup of the center section was tested statically and the results of this test are stated in a report from Division 1612 to Division 1326, dated November 18, 1956, Ref. Sym: 1612 (346), Project No. TM-412. The "Summary of Results" follows:

> "A mockup of the center section of the TX-28, consisting of a hollow aluminum (75ST-6) cylinder having a wall thickness of 9/16-inch and filled with iso-cyanatic plastic was statically tested to five conditions.
>
> Condition 1 (rolling pullout loads at aft lug and sway braces) produced failure on the threads of the mild steel insert resulting from the radial lug load at 100 per cent of limit load. The same condition produced failure on the threads in the aluminum case

at the redesigned insert when 115 per cent of limit load was reached. The case of a new cylinder with a new insert cracked in a longitudinal direction above the insert at 120 per cent of limit load for the same loading condition.

The cylinder withstood 150 per cent of limit loads for conditions 4, 6, and 7 (rolling pullout loads at forward lug and sway braces) and 200 per cent of limit load for condition 5 (ejector load) without showing appreciable damage.

Condition 2 (rolling pullout) and condition 3 (arrested landing) were included on the work order but were omitted from the test at the suggestion of the consultant.

When applied singly, a radial lug load of 36,400 pounds, a sway brace load of 52,000 pounds on a 3/4-inch diameter pad and a sway brace load of 80,000 pounds on a two-inch diameter pad each produced failure.

The handling fitting withstood 150 per cent and 200 per cent of limit loads, respectively, for the two handling conditions tested."

Setup for Test

I. Figures 2 thru 5 are photographs of a typical test setup.

II. The items tested were three TX-28 case sections and lugs, Dwg. Nos. SK(1326)50245, 125293, and DS(1326)52283.

III. The following equipment was used in the test:

1. Four Simplex hydraulic jacks and pumps, 30-ton capacity.
2. Two Blackhawk jacks and pumps, 7.5-ton capacity.
3. Two Baldwin load cells, 2000-pound capacity, Serial Nos. 3549, 8813.
4. Four calibrated pull rods.
5. One 18-inch to 20-inch micrometer.
6. Static jig and attachments.
7. Six Baldwin strain indicators, Serial Nos. J-59101, J-92498, 391904, J-92499, J-59191, J-59252.
8. One Fairchild strain indicator, Model 101C-2, Serial No. 119.

IV. The following instrumentation was used in the test:

1. Eight strain gage rosettes, Type AR-7, resistance 120 ± .3 ohms, G.F. 1.91 ± 2 per cent, Lot No. 232-11, C-71.

2. One single element strain gage, Type A-7, resistance 120 ± .3 ohms, G.F. 1.91 ± 2 per cent, Lot No. 232-11.

Procedure

The TX-28 case section was attached to the Douglas Aero 7A Ejector Rack which in turn was attached to the static jig (Fig. 2). This same setup was used essentially for all the tests that were run except the Douglas Aero 7A Ejector Rack failed under load even though it was reinforced (see Fig. 4) and a shop constructed rack was then used to complete the remaining tests. A metal shim was slipped between a lug and the bomb rack (see Fig. 2) in order to make one lug take all the longitudinal load. Either the forward lug or the aft lug was shimmed according to the testing specifications.

The first TX-28 case (14ST-6 forging) was instrumented with strain gages at locations specified by the consultant as shown in Figs. 6 and 7. On the second (75ST6 forging) and third (mild steel) cases the strain gages around the aft lug were omitted. Strain readings were taken at each increment of load or every test. Deformation of the case was measured with a large micrometer during the progress of each test.

The following tests were run on the first TX-28 case which was a 14ST6 forging:

Test No. 1 -- The TX-28 was mounted to the Douglas Aero 7A Ejector Rack which in turn was mounted to the static jig (Fig. 2). Two load plates were attached to the case, one at each end with lugs attached to the plates in order to apply the loads. Six loads were applied to the unit simultaneously to develop the moments and loads specified in Table I, up to 150 per cent design limit load simulating flight condition F 6.7. The forward lug was shimmed so as the forward lug would have to resist the entire thrust load (Px).

Test No. 2 -- The TX-28 case was left mounted to the Douglas Aero 7A Ejector Rack and the static jig as in test No. 1. Six loads were applied to the unit simultaneously to develop the moments and loads specified in Table I, up to 140 per cent design limit load simulating flight condition F 6.1. The aft lug was shimmed so as the aft lug would have to resist the entire thrust load (Px). The Douglas Aero 7A Ejector Rack failed in this test as shown in Fig. 8.

Test No. 3 -- A shop constructed rack was substituted for the broken Douglas rack and the TX-28 case was mounted in the same fashion as in test No. 2. This test was a continuation of test No. 2 to 150 per cent design limit load.

Test No. 4 -- The TX-28 case was mounted in the same manner as in test No. 3. Six loads were applied to the unit simultaneously to develop the moments and loads specified in Table I up to 100 per cent design limit load simulating flight condition F 6.3. The forward lug was shimmed so as the forward lug would have to resist the entire thrust load (Px).

Test No. 5 -- The TX-28 case was mounted in the same manner as in test No. 3. Six loads were applied to the unit simultaneously to develop the moments and loads specified in Table I up to 100 per cent design limit load simulating catapult condition C 1.1. The forward lug was shimmed so as the forward lug would have to resist the entire thrust load (Px).

Test No. 6 -- The TX-28 case was mounted in the same manner as in test No. 3. Six loads were applied to the unit simultaneously to develop the moments and loads specified in Table I up to 150 per cent design limit load simulating catapult condition C 1.1. The aft lug was shimmed so as the aft lug would have to resist the entire thrust load (Px).

Test No. 7 -- The TX-28 case was mounted in the same manner as in test No. 3. Two loads were applied to the unit, a longitudinal load in the X direction and a vertical load in the Z direction on the aft load plate. These loads were applied to the unit simultaneously to develop the moments and loads specified in Table I up to 165 per cent design limit load simulating arrested landing condition A 5.1. The aft lug was shimmed so as the aft lug would have to resist the entire thrust load (Px).

Test No. 8

This test is a continuation of test No. 4 with the unit loaded to 150 per cent design limit load.

Test No. 9 -- This test is a continuation of test No. 5 with the unit loaded to failure. The forward lug was partially pulled out at 140 per cent limit load and a single load (Pz forward in Fig. 1) was used to pull the forward lug completely out of the unit.

Test No. 10 -- The TX-28 case was mounted in the same manner as in test No. 3. Two loads were applied to the unit, a longitudinal load in the X direction and a vertical load in the Z direction on the aft load plate simulating flight condition F 6.1 as specified in Table I up to 200 per cent design limit load. The unit was loaded in increments up to 200 per cent design limit load and then a single load Lz was applied until failure.

The following tests were run on the second TX-28 case which was a 75ST-6 forging:

Test No. 11 -- The second TX-28 case was mounted in the same manner as in test No. 3. Six loads were applied to the unit simultaneously to develop

the moments and loads specified in Table I up to 200 per cent design limit load simulating flight condition 6.3. The forward lug was shimmed so as the forward lug would have to resist the entire thrust load (Px).

Test No. 12 -- The second TX-28 case was mounted in the same manner as in test No. 3. Six loads were applied to the unit simultaneously to develop the moments and loads specified in Table I up to 165 per cent design limit load simulating catapult condition C 1.1. The forward lug was shimmed so as the forward lug would have to resist the entire thrust load (Px).

The following test was run on the third TX-28 case which was constructed of mild steel and is to be used as a fly-around unit:

Test No. 13 -- The third TX-28 case was set up in the jig in the same manner as in test No. 3. Six loads were applied to the unit simultaneously to develop the moments and loads specified in Table I up to 200 per cent design limit load simulating flight condition F 6.3. The forward lug was shimmed so as the forward lug would have to resist the entire thrust load (Px).

Test No. 14 -- The third TX-28 case was set up in the jig in the same manner as in test No. 3. Six loads were applied to the unit simultaneously to develop the moments and loads specified in Table I up to 175 per cent design limit load simulating catapult condition C 1.1. The forward lug was shimmed so as the forward lug would have to resist the entire thrust load (Px).

Results

The first TX-28 case (14ST-6 forging) that was statically tested was structurally adequate to withstand 150 per cent design limit load when tested to simulate flight condition 6.7, 200 per cent when tested to simulate flight condition 6.1, 150 per cent when tested to simulate flight condition 6.3 and 165 per cent when tested to simulate arrested landing condition A 5.1 but failed at 140 per cent design limit load when tested to simulate catapult condition C 1.1.

The second TX-28 case (75ST-6 forging) that was statically tested was structurally adequate to withstand 200 per cent design limit load when tested to simulate flight condition F 6.3 but failed by the forward lug tilting over at 145 per cent design limit load when tested to simulate catapult condition C 1.1. After the lug had tilted the unit was tested to 165 per cent design limit load with the aft lug absorbing part of the thrust load (P_x) and no further failures were observed.

The third TX-28 case (mild steel) that was statically tested was structurally adequate to withstand 200 per cent design limit load when tested to simulate flight condition F 6.3, but the metal in the case entered the

the plastic range at approximately 100 per cent design limit load under strain gages 7, 8, and 9 (see Fig. 6). The third TX-28 case when tested to simulate catapult condition catapult C 1.1 was structurally adequate to withstand at least 175 per cent design limit load although the metal around strain gages 7, 8, and 9 entered the plastic range at approximately 80 per cent design limit load.

Table II is a list of the tests performed and the results of each test.

Lists of strain readings taken and computed stresses for tests 1 through 10 are recorded in Tables III through XXII. Listing of load vs. deformation of the case for tests 1, 2, 4, 5, 6, and 7 are shown in Tables XXIII through XXVIII.

Tables XXIX through XXXII are lists of strain readings and computed stresses in tests 11 and 12.

Tables XXXIII through XXXVI are lists of strain readings and computes stresses in tests 13 and 14. Listings of loads vs. deformation of case for tests 13 and 14 are shown in Tables XXXVII and XXXVIII.

L. J. WOOLRICH - 1612-2

Approved by: Original Signed By P. H. ADAMS
PAUL H. ADAMS - 1612

LJW:1612-2:as

DISTRIBUTION:
1/6A - W. J. Denison, 1224
2/6A - W. A. Gardner, 1610
3/6A - D. M. Bruce, 1282
4/6A - J. W. McKiernan, 1283
5/6A - C. L. Gomel, 5523
6/6A - R. K. Smeltzer, Central Record File Section, 7221-3

Distribution B
1, 2, 3/4 B EH. DRAPER 1200
4/4 B R.K. SMELTZER 4721-3
C. Distribution
1, 2/3 C R. P. Kelly 4745
3/3 C R. K. Smeltzer 4721-3

[redacted] UNCLASSIFIED

TABLE I

MAGNITUDES OF LOADS AND MOMENTS UNDER VARIOUS TESTING CONDITIONS IN STATIC TEST OF TX-28 LUGS AND SWAY BRACES

Test No.	TX-28 Case Tested No.	Condition	Load (Lbs.)			Moments (In. Lbs.)	
			P_x[1]	P_y	P_z	M_y	M_z
1	1	Flight F 6.7	-6,835	16,081	-9,620	-246,330	77,830
2	1	Flight F 6.1	1,745	10,353	-14,515	+134,480	77,830
3	1	Flight F 6.1	1,745	10,353	-14,515	+134,480	77,830
4	1	Flight F 6.3	-6,835	12,418	-10,520	-246,330	-77,830
5	1	Catapult C 1.1	-19,350	3,218	-6,435	-50,600	-16,860
6	1	Catapult C 1.1	-19,350	3,218	-6,435	-50,600	-16,860
7	1	Arrested Landing A 5.1	19,350		*4,290	*50,600	
8	1	Flight F 6.3	-6,835	12,418	-10,520	-246,330	-77,830
9	1	Catapult C 1.1	-19,350	3,218	-6,435	-50,600	-16,860
10	1	Flight F 6.1	1,745		*-14,515	*134,480	
11	2	Flight F 6.3	-6,835	12,418	-10,520	-246,330	-77,830
12	2	Catapult C 1.1	-19,350	3,218	-6,435	-50,600	-16,860
13	3	Flight F 6.3	-6,835	12,418	-10,520	-246,330	-77,830
14	3	Catapult C 1.1	-19,350	3,218	-6,435	-50,600	-16,860

See Fig. 1 for load locations and directions.
All loads represent 100 per cent design limit load.

* Loads Pz and My combined into one load Lz to give the same effect (see Fig. 1).

NOTE: [1]The thrust load (Px) was resisted entirely by the forward lug in tests 1, 4, 5, 8, 9, 11, 12, 13, and 14 and resisted entirely by the aft lug in tests 2, 3, 6, 7, and 10.

TABLE II

LIST OF TESTING CONDITIONS, PER CENT LOAD ATTAINED AND RESULTS FOR VARIOUS TESTS IN STATIC TEST OF TX-28 LUGS AND SWAY BRACES

Part 1 -- The first TX-28 case statically tested, which was a 14ST-6 forging, was tested to the following conditions with the following results:

Test No.	Condition	Thrust Resisted By Aft. Lug	Thrust Resisted By Fwd. Lug	Per Cent Load Attained	Results
1	F 6.7		X	150%	Unit withstood load.
2	F 6.1	X		140%	Douglas Aero 7A Ejector Rack failed (see Fig. 8).
3	F 6.1	X		150%	Unit withstood load.
4	F 6.3		X	100%	Unit withstood load.
5	C 1.1		X	100%	Unit withstood load.
6	C 1.1	X		150%	Unit withstood load.
7	A 5.1	X		165%	Unit withstood load.
8	F 6.3		X	150%	Unit withstood load.
9	C 1.1		X	140%	Forward lug tilted over. A vertical load (Pz forward) of 18,500 was necessary to completely pull the lug out (see Fig. 9).
10	F 6.1	X		200%	The lug withstood 200 per cent design limit load. A vertical load Pz aft. of 54,300 pounds was necessary to completely pull the lug out (see Fig. 10).

Part 2 -- The second TX-28 case statically tested, which was a 75ST-6 forging, was tested to the following conditions with the following results:

11	F 6.3		X	200%	Unit withstood load.
12	C 1.1		X	165%	Forward lug tilted at 145 per cent design limit load.

Part 3 -- The third TX-28 case statically tested, which was a mild steel case was tested to the following conditions with the following results:

13	F 6.3		X	200%	Unit withstood 200 per cent although the metal entered the plastic range at strain gage locations 7, 8, and 9 (see Fig. 6) at approximately 100 per cent design limit load.
14	C 1.1		X	175%	Unit withstood 175 per cent although the metal entered the plastic range at strain gage locations 7, 8, and 9 (see Fig. 6) at approximately 80 per cent design limit load.

0675

TABLE III

RECORDED STRAINS IN TEST NO. 1, SIMULATING FLIGHT CONDITION F 6.7 IN STATIC TEST OF TX-26 LUGS AND SWAY BRACES

Strain (Microinches/Inch)

Load Per Cent	Gage Nos. 1	2	3	4	5	6	7	8	9	10	11	12	13	14	15	16	17	18	19	20	21	22	23	24	25
0	0	0	0	0	0	0	0	0	0	0	0	0	0	0	0	0	0	0	0	0	0	0	0	0	0
20	- +268	+63	-119	-98	+172	+532	+683	+127	-98	-52	-33	+210	+555	+16	-174	-119	+164	+566	+745	+213	-197	-133	+12	+497	-160
40	+510	+67	-212	-139	+258	+800	+1080	+298	-150	-136	-104	+496	+869	+49	-262	-193	+329	+970	+1600	+368	-351	-232	-06	+831	-215
60	+723	+123	-260	-189	+348	+1030	+1530	+436	-203	-205	-139	+7[illegible]	+1120	+45	-365	-252	+478	+1250	+2300	+545	-439	-342	-04	+1170	-240
80	+923	+85	-350	-235	+397	+1130	+1720	+609	-238	-260	-150	+939	+1360	+78	-469	-328	+624	+1650	+2740	+663	-631	-423	-57	+1410	-245
0	0	0	0	0	0	0	0	0	0	0	0	0	0	0	0	0	0	0	0	0	0	0	0	0	0
20	+793	+230	-236	-159	+[illegible]08	+614	+843	+117	-165	-146	+24	+320	+608	+38	-197	-123	+214	+623	+1050	+198	-224	-133	+2	+491	-370
40	+831	+154	-354	-192	+130	+825	+1320	+267	-217	-204	-32	+550	+947	+86	-285	-198	+360	+1060	+1380	+334	-363	-226	-2	+808	-360
60	+940	-34	-497	-247	+287	+1160	+1480	+425	-284	-290	-105	+840	+1320	+137	-376	-279	+513	+1470	+1990	+458	-506	-320	-16	+1150	-285
80	+991	+104	-531	-300	+373	+1350	+1950	+612	-328	-355	-145	+1160	+1270	+181	-492	-362	+653	+1910	+2620	+569	-631	-400	-26	+1420	-315
100	+1060	+77	-575	-367	+479	+1520	+2360	+793	-363	-415	-199	+1370	+1570	+213	-624	-446	+735	+2360	+3190	+676	-771	-485	-81	+1660	-335
0	+66	-21	-28	-11	-9	-10	-19	+30	+18	-18	-6	+014	-55	0	+14	+2	+4	-9	-48	-41	+2	+3	-7	-39	+15
0	0	0	0	0	0	0	0	0	0	0	0	0	0	0	0	0	0	0	0	0	0	0	0	0	0
Wt. Unit	+230	+10	-80	0	-28	0	+43	0	-20	-7	+53	+48	+45	-7	-18	-6	+18	+33	+66	+19	-11	-10	-9	+30	-120
Wt. Unit + 1g	+762	+128	-239	-135	-111	+236	+476	+52	-144	-71	+141	+273	+217	0	-74	-41	+59	+190	+279	+51	-59	-32	-7	+116	-400
60	+2510	+576	-753	-350	+47	+1580	+2820	+960	-447	-466	+416	+2320	+557	-66	-338	-102	+453	+882	+1570	+254	-368	-234	-72	+533	-1300
80	+3180	+780	-869	-422	+19	+2020	+3570	+1240	-466	-566	+520	+2810	+591	-122	-440	-124	+582	+1110	+1930	+320	-456	-287	-113	+646	-1660
100	+3890	+955	-1330	-526	+144	+2430	+4790	+1600	-524	-499	+587	+3350	+589	-186	-564	-150	+725	+1330	+1980	+384	-544	-341	-176	+724	-1880
115	+4750	+1200	-1100	-1020	+320	+3200	+5960	+1660	-630	-749	+507	+3460	+575	-250	-661	-159	+803	+1420	+2520	+442	-603	-379	-213	+808	-1430
120	+4920	+1230	-1140	-1020	+321	+3320	+6260	+1750	-660	-798	+552	+3610	+561	-279	-678	-156	+827	+1430	+2620	+466	-619	-392	-225	+839	-2040
130	+5360	+1300	-1230	-815	+349	+3510	+6870	+1920	-749	-899	+594	+3910	+531	-326	-714	-157	+884	+1480	+2770	+504	-654	-412	-251	+883	-2120
140	+6040	+1460	-1380	-889	+363	+3760	+7370	+2080	-862	-1320	+648	+4220	+505	-378	-745	-157	+936	+1520	+2940	+554	-689	-438	-273	+954	-2130
145	+6180	+1510	-1460	-1210	+356	+3340	+7670	+2200	-908	-1370	+683	+4400	+520	-330	-763	-162	+970	+1570	+2690	+572	-712	-453	-283	+987	-2225
150	+6960	+1570	-1580	-1230	+262	+3770	+7850	+2280	-942	-1460	+79[illegible]	+4590	+483	-416	-787	-165	+1050	+1320	+2840	+588	-739	-461	-314	+986	-2270
0	+866	+23	-324	-99	+58	+45	+1510	+227	-425	-197	-17	+209	-45	+22	+22	+10	+6	-34	-51	-55	-5	+14	-31	-104	-15

* Load was dropped to zero but no readings taken.

\+ Denotes tension.
\- Denotes compression.

TABLE IV

RECORDED STRAINS IN TEST NO. 2, SIMULATING FLIGHT CONDITION F 6.1 IN STATIC TEST OF TX-28 LUGS AND SWAY BRACES

Load Per Cent	Strain (Microinches/Inch) Gage Nos. 1	2	3	4	5	6	7	8	9	10	11	12
0	0	0	0	0	0	0	0	0	0	0	0	0
Wt. Unit	+250	+50	-70	0	+15	+20	+70	-50	-75	-20	+15	+25
Wt. Unit + 1g	+780	+190	-210	-30	-90	+200	+450	0	-150	-70	+30	+210
20	+740	+190	-210	-120	-75	+325	+535	+10	-150	-100	+70	+230
40	+1300	+340	-345	-175	-145	+540	+870	+100	-210	-135	+140	+475
60	+1630	+480	-395	-200	-120	+760	+1070	+120	-230	-240	+155	+540
80	+1980	+650	-450	-250	-140	+1060	+1260	+120	-270	-275	+190	+610
100	+2340	+775	-520	-270	-175	+1225	+1410	+140	-310	-310	+250	+720
0	+80	+45	0	+10	0	+5	-30	-20	0	-5	+50	-5
100	+2340	+785	-520	-250	-150	+1240	+1330	+100	-320	-300	+250	+685
110	+2535	+870	-550	-270	-155	+1390	+1440	+105	-340	-320	+265	+725
115	+2620	+900	-565	-275	-160	+1430	+1465	+110	-350	-330	+280	+740
130	+2865	+980	-620	-290	-170	+1575	+1590	+120	-370	-355	+310	+805
0	+45	+40	+10	+10	+5	+10	-50	-25	0	0	0	-20

Load Per Cent	Strain (Microinches/Inch) Gage Nos. 13	14	15	16	17	18	19	20	21	22	23	24	25
0	0	0	0	0	0	0	0	0	0	0	0	0	0
Wt. Unit	+50	-15	-20	+15	0	+40	+85	+40	-25	-25	-5	+65	No Reading
Wt. Unit + 1g	+210	-30	-85	-40	+50	+170	+350	+10	-70	-40	0	+180	-360
20	+590	0	-195	-90	+80	+425	+670	+195	-120	-105	+55	+470	-330
40	+1050	+40	-315	-160	+190	+810	+1320	+340	-260	-205	+90	+835	-610
60	+1450	+120	-410	-240	+320	+1255	+1860	+450	-370	-290	+115	+1130	-735
80	+1840	+150	-490	-300	+410	+1575	+2450	+620	-495	-385	+140	+1460	-870
100	+2180	+210	-550	-360	+525	+1900	+2940	+725	-600	-465	+145	+1725	-1000
0	+5	-10	+5	0	-20	-10	+55	-35	-15	-20	+5	+60	-40
100	+2210	+230	-550	-360	+530	+1930	+2990	+725	-610	-470	+135	+1740	-1000
110	+2320	+240	-565	-380	+580	+2045	+3200	+775	-650	-500	+130	+1850	-1060
115	+2390	+250	-580	-385	+610	+2110	+3310	+805	-675	-520	+130	+1910	-1090
130	+2650	+280	-630	-430	+675	+2340	+3710	+905	-760	-590	+130	+2120	-1165
0	-95	-45	+25	+30	-10	-135	-10	+20	+5	-10	0	+35	0

+ denotes tension.
- denotes compression.

NOTE: Bomb rack failed at 140 per cent.

[redacted]

TABLE V

RECORDED STRAINS IN TEST NO. 3, SIMULATING FLIGHT CONDITION F 6.1 IN STATIC TEST OF TX-23 LUGS AND SWAY BRACES

Strain (Microinches/Inch)

Load Per Cent	Gage Nos. 1	2	3	4	5	6	7	8	9	10	11	12
0	0	0	0	0	0	0	0	0	0	0	0	0
Wt. Unit	+16	0	-36	-6	-4	+20	+36	-19	-21	-9	+15	+22
Wt. Unit + 1g	+826	+1.5	-209	-67	-92	+144	+461	+81	-166	-113	+104	+234
20	+724	+140	-235	-90	-122	+206	+516	+36	-193	-140	+129	+255
40	+960	+180	-326	-115	-146	+285	+711	+155	-239	-163	+178	+339
60	+1000	+215	-352	-133	-143	+381	+847	+200	-253	-213	+194	+465
80	+1240	+270	-378	-155	-155	+477	+956	+233	-278	-223	+235	+545
100	+1380	+314	-408	-173	-167	+548	+1050	+278	-294	-240	+266	+623
115	+1595	+330	-440	-220	-190	+660	+1220	+350	-310	-300	+260	+680
130	+1650	+450	-440	-220	-165	+700	+1260	+340	-330	-310	+230	+650
140	+2250	+690	-550	-310	-110	+1200	+1710	+420	-420	-400	+200	+740
145	+2290	+700	-565	-320	-100	+1240	+1730	+420	-410	-410	+210	+750
150	+2370	+740	-580	-330	-110	+1280	+1760	+440	-410	-410	+220	+770
Wt. Unit + 1g	+76	0	-18	-1	-10	-4	-45	-1	-13	-5	+21	-4
Wt. Unit.	+66	-14	-40	-10	-8	+3	-31	-15	-29	-10	+6	-4

Strain (Microinches/Inch)

Load Per Cent	Gage Nos. 13	14	15	16	17	18	19	20	21	22	23	24	25
0	0	0	0	0	0	0	0	0	0	0	0	0	0
Wt. Unit	+4	-13	-10	-3	+9	+4	+5	+10	-5	+3	-3	+10	-20
Wt. Unit + 1g	+177	+13	-70	-46	+39	+142	+185	+6	-50	-7	+11	+64	-370
20	+700	+138	-211	-135	+115	+527	+665	+54	-130	-38	+17	+299	-415
40	+1000	+273	-337	-218	+176	+900	+1120	+90	-200	-64	+21	+512	-560
60	+1810	+437	-470	-301	+217	+1300	+1460	+130	-230	-88	-9	+720	-630
80	+2320	+592	-577	-370	+284	+1720	+1800	+148	-476	-107	+10	+893	-700
100	+2800	+743	-671	-430	+361	+2130	+2130	+173	-582	-125	-4	+1050	-780
115	+3260	+870	-750	-550	+330	+2350	+2300	+185	-630	-150	+30	+1190	-880
130	+3540	+940	-800	-620	+420	+2590	+2580	+165	-760	-160	-20	+1300	-930
140	+3550	+955	-790	-590	+420	+2440	+2660	+300	-800	-170	-50	+1380	-1070
145	+3690	+850	-800	-610	+440	+2480	+2740	+310	-830	-190	-40	+1390	-1080
150	+3660	+870	-890	-620	+470	+2540	+2840	+330	-890	-190	-70	+1420	-1090
Wt. Unit + 1g	+180	+1	-60	-72	+44	+97	+84	-42	-123	-23	-54	-35	-30
Wt. Unit	-13	-26	+14	-17	+23	-44	-71	-50	-70	-21	-34	-94	-40

+ denotes tension.
- denotes compression.

[redacted]

UNCLASSIFIED

Ref. Sym: 1612 (456)
Project No. TM-520

TABLE VI

RECORDED STRAINS IN TEST NO. 4, SIMULATING FLIGHT CONDITION F 5.3 IN STATIC TEST OF TX-28 LUGS AND SWAY BRACES

Load Per Cent	Strain (Microinches/Inch) Gage Nos. 1	2	3	4	5	6	7	8	9	10	11	12
0	0	0	0	0	0	0	0	0	0	0	0	0
Wt. Unit	+250	+20	-126	-44	-21	+64	+203	+15	-86	-41	+39	+100
Wt. Unit + 1g	+668	+81	-284	-97	-98	+162	+453	+34	-149	-111	+116	+225
20	+1470	+240	-660	-290	-10	+960	+1420	+330	-330	-320	+180	+750
40	+2100	+445	-780	-370	+70	+1520	+2075	+630	-420	-420	+290	+1150
60	+2755	+750	-870	-490	+150	+2110	+2710	+835	-495	-510	+415	+1560
80	+3360	+1010	-940	-600	+250	+2640	+3320	+1150	-535	-605	+520	+1935
100	+4000	+1260	-1025	-725	+320	+3215	+4000	+1440	-570	-730	+620	+2310
0	+10	+2	-3	-7	-7	-4	-127	-7	-4	-8	-14	-36

Load Per Cent	Strain (Microinches/Inch) Gage Nos. 13	14	15	16	17	18	19	20	21	22	23	24	25
0	0	0	0	0	0	0	0	0	0	0	0	0	0
Wt. Unit	-7	-9	-1	+2	+3	+6	+3	+9	0	0	-1	+8	-170
Wt. Unit + 1g	+202	+23	-79	-52	+18	+154	+198	+27	-50	-6	-18	+81	-390
20	+220	+5	-110	-70	+10	+165	+210	0	-70	-25	-25	+70	-800
40	+340	+50	-140	-95	+50	+300	+350	-20	-110	-30	-40	+100	-1065
60	+500	+105	-180	-120	+90	+420	+460	-7	-140	-13	-7	+165	-1295
80	+605	+150	-200	-145	+110	+560	+600	-40	-180	-40	-40	+160	-1510
100	+720	+200	-225	-165	+135	+675	+710	-40	-210	-50	-40	+230	-1710
0	-5	-4	-4	+4	-6	-7	-12	+4	0	+15	0	+4	-30

+ denotes tension.
- denotes compression.

[redacted]

UNCLASSIFIED

[redacted]

 UNCLASSIFIED

Ref. Sym: 1612 (456)
Project No. TM-520

TABLE VII

ELECTRICAL STRAINS IN TEST NO. 5, SIMULATING CATAPULT CONDITION C 1.1 IN STATIC TEST OF TX-28 LUGS AND GUNWAY BRACES

Load Per Cent	Strain (Microinches/Inch) Gage Nos. 1	2	3	4	5	6	7	8	9	10	11	12
0	0	0	0	0	0	0	0	0	0	0	0	0
Wt. Unit	+220	-8	-135	-33	-19	+50	+133	-5	-30	-29	-16	+123
Wt. Unit + 1g	+208	+119	-276	-163	-215	+206	+491	+96	-173	-137	+76	+322
20	+414	-386	-969	-367	+354	+1120	+1370	+375	-350	-380	-200	+840
40	+26	-678	-1380	-524	+874	+2020	+2270	+730	-434	-550	-424	+1430
60	-205	-937	-1800	-604	+1370	+2920	+3160	+1060	-534	-764	-657	+1970
80	-332	-1160	-2170	-885	+1760	+3760	+3775	+1320	-670	-1010	-830	+2440
100	-247	-1200	-2430	-1050	+1960	+4260	+4530	+1500	-840	-1210	-970	+2850
0	-43	-182	-616	-25	+75	+145	-125	-50	-125	-102	-155	+10

Load Per Cent	Strain (Microinches/Inch) Gage Nos. 13	14	15	16	17	18	19	20	21	22	23	24	25
0	0	0	0	0	0	0	0	0	0	0	0	0	0
Wt. Unit	-24	-14	-5	-5	-5	+13	+20	+12	-2	-14	-7	0	-140
Wt. Unit + 1g	+166	+1	-33	-57	+12	+137	+216	+15	-55	-29	-24	+72	-370
20	+55	-10	-43	-33	+15	+33	+128	+13	-33	-26	-13	+27	-50
40	+24	-9	-29	-24	+14	+70	+90	+8	-20	-27	-10	+15	+240
60	0	-6	-12	-16	+13	+49	+54	-4	-10	-31	-3	+7	+510
80	-104	-30	-26	-17	+51	+75	+142	-12	-40	-35	-56	-6	+670
100	-335	-167	-164	-38	+167	+155	+307	-32	-37	-39	-153	-24	+605
0	-34	-16	-2	-7	-10	0	-12	+4	+2	-35	-11	-17	+70

+ denotes tension.
- denotes compression.

[redacted]

UNCLASSIFIED

TABLE VIII

RECORDED STRAINS IN TEST NO. 6, SIMULATING CATAPULT CONDITION C 1.1 IN STATIC TEST OF TX-28 LUGS AND SWAY BRACES

Load Per Cent	Strain (Microinches/Inch) Gage Nos. 1	2	3	4	5	6	7	8	9	10	11	12
0	0	0	0	0	0	0	0	0	0	0	0	0
Wt. Unit	+306	+27	-113	-34	-30	+50	+132	+15	-94	-18	+50	+62
Wt. Unit + 1g	+748	+140	-250	-137	-123	+215	+450	+75	-173	-122	+112	+218
20	+1210	+235	-390	-216	-71	+597	+992	+272	-260	-260	+161	+559
40	+1815	+385	-590	-277	-45	+930	+1430	+483	-348	-355	+270	+901
60	+2300	+518	-693	-332	-28	+1130	+1865	+635	-404	-499	+334	+1180
80	+2800	+660	-797	-391	-14	+1520	+2200	+775	-443	-456	+488	+1400
100	+3310	+808	-888	-461	0	+1860	+2570	+934	-496	-538	+589	+1670
0	+28	0	+6	-8	-6	-15	-24	+8	+2	0	-9	-43
115	+3640	+933	-965	-575	+6	+2200	+2840	+1010	-546	-501	+673	+1800
130	+3895	+1000	-1020	-625	0	+2405	+3070	+1110	-590	-550	+720	+1955
140	+4100	+1070	-1040	-660	+20	+2550	+3240	+1170	-600	-580	+760	+2070
145	+4235	+1110	-1060	-675	+30	+2640	+3330	+1210	-610	-595	+780	+2110
150	+4350	+1140	-1070	-700	+30	+2710	+3415	+1240	-620	-615	+800	+2170
0	+100	-18	+11	-15	-27	-43	-124	0	-60	-10	-15	-38

Load Per Cent	Strain (Microinches/Inch) Gage Nos. 13	14	15	16	17	18	19	20	21	22	23	24	25
0	0	0	0	0	0	0	0	0	0	0	0	0	0
Wt. Unit	+122	+33	-31	-20	-25	+56	+10	-4	-3	-7	+17	+20	-75
Wt. Unit + 1g	+284	+27	-107	-58	-12	+134	+164	+10	-39	-20	+11	+37	-330
20	-129	-150	-224	-79	+207	+254	+516	-5	-149	-23	-135	+75	-590
40	-544	-395	-396	-133	+464	+433	+834	-20	-246	-32	-399	+75	-900
60	-940	-575	-513	-188	+721	+651	+1130	-40	-341	-40	-487	+71	-1110
80	-1170	-692	-607	-254	+952	+886	+1540	-57	-439	-50	-654	+80	-1290
100	-1420	-782	-661	-306	+1145	+1060	+1720	-58	-534	-56	-811	+73	-1500
0	-105	-30	-26	-21	+30	+25	+78	+25	-40	-21	-26	+4	+45
115	-1595	-880	-725	-335	+1330	+1210	+2030	-38	-656	-75	-976	+97	-1640
130	-1750	-965	-795	-395	+1485	+1360	+2255	-70	-760	-90	-1120	+80	-1750
140	-1850	-1010	-830	-430	+1590	+1480	+2400	-75	-820	-100	-1210	+75	-1815
145	-1920	-1035	-850	-440	+1640	+1520	+2450	-90	-850	-110	-1250	+75	-1865
150	-1965	-1050	-865	-460	+1695	+1575	+2510	-85	-880	-110	-1295	+70	-1890
0	-168	-48	-42	-36	+34	+8	+54	+5	-79	-40	-56	-30	+20

+ denotes tension.
- denotes compression.

TABLE IX

RECORDED STRAINS IN TEST NO. 7, SIMULATING ARRESTED LANDING CONDITION A 5.1 IN STATIC TEST OF TX-28 LUGS AND SWAY BRACES

Load Per Cent	Strain (Microinches/Inch) Gage Nos. 13	14	15	16	17	18	19	20	21	22	23	24
0	0	0	0	0	0	0	0	0	0	0	0	0
20	+855	+145	-204	-55	-183	+434	+6	-55	-93	-17	+223	+337
40	+1645	+336	-376	-13[illegible]	-295	+608	+102	-74	-170	-37	+399	+670
60	+2480	+528	-552	-216	-372	+989	+307	-79	-262	-50	+564	+1000
80	+3320	+702	-708	-217	-508	+1350	+395	-117	-373	-79	+743	+1280
100	+4660	+970	-930	-384	-584	+1890	+743	-65	-403	106	+342	+1560
0	+247	+6	+3	-3	-3	-59	+111	+20	-26	-13	-89	-152
0	0	0	0	0	0	0	0	0	0	0	0	0
20	+648	+80	-115	-60	-109	+157	-10	-11	-80	-24	+157	+220
40	+1240	+140	-330	-90	-320	+350	-135	-90	-130	-65	+330	+530
60	+1930	+270	-480	-120	-470	+570	-165	-145	-240	-79	+600	+790
80	+2620	+400	-630	-160	-620	+770	-175	-250	-360	-90	+795	+1100
100	+3310	+540	-765	-195	-760	+1010	-173	-350	-505	-100	+980	+1345
115	+3850	+640	-865	-220	-865	+1170	-160	-420	-610	-110	+1125	+1520
130	+4460	+735	-975	-240	-980	+1345	-150	-490	-720	-120	+1245	+1695
140	+4910	+790	-1065	-265	-1070	+1445	-150	-560	-800	-135	+1330	+1785
145	+5190	+815	-1135	-270	-1125	+1510	-150	-585	-850	-140	+1365	+1825
150	+5415	+830	-1195	-265	-1155	+1540	-150	-610	-885	-140	+1405	+1870
0	+410	-60	-110	-30	-50	-5	-40	-20	-30	-65	-65	-85
0	0	0	0	0	0	0	0	0	0	0	0	0
100	+3230	+535	-770	-215	-760	+920	-35	-265	-535	-125	+935	+1335
115	+3820	+625	-875	-235	-830	+1035	-50	-355	-650	-130	+1065	+1510
130	+4260	+725	-975	-260	-975	+1275	0	-435	-770	-125	+1200	+1690
140	+4655	+785	-1065	-285	-1060	+1400	-10	-495	-850	-135	+1285	+1305
145	+4835	+820	-1110	-310	-1090	+1440	0	-510	-890	-150	+1310	+1835
150	+5090	+840	-1165	-310	-1140	+1490	+10	-540	-930	-160	+1340	+1890
0	-31	-34	-36	-37	-38	-48	-15	-21	-30	-32	-38	-90
0	0	0	0	0	0	0	0	0	0	0	0	0
150	+5260	+970	-1170	-310	-1350	+1450	-900	-240	-130	-150	+1440	+1790
155	+5280	+980	-1190	-280	-1360	+1470	-820	-260	-215	-110	+1440	+1740
160	+5535	+1010	-1250	-300	-1420	+1520	-810	-310	-270	-115	+1510	+1820
165	+5770	+1040	-1330	-300	-1470	+1580	-810	-340	-310	-110	+1560	+1890
0	+15	-11	-21	-23	-66	-72	-145	+75	+175	-40	-45	-100

+ denotes tension.
- denotes compression.

[redacted]

UNCLASSIFIED

Ref. Sym: 1612 (456)
Project No. TM-520

TABLE X

RECORDED STRAINS IN TEST NO. 8, SIMULATING FLIGHT CONDITION F 6.3 IN STATIC TEST OF TX-28 LUGS AND SWAY BRACES

Load Per Cent	Strain (Microinches/Inch) Gage Nos. 1	2	3	4	5	6	7	8	9	10	11	12
0	0	0	0	0	0	0	0	0	0	0	0	0
100	+4460	+1420	-1080	-860	+418	+3680	+4150	+1435	-520	-810	+480	+2280
115	+4830	+1540	-1130	-950	+430	+3980	+4500	+1610	-610	-900	+570	+2570
130	+5500	+1800	-1200	-1120	+425	+4430	+5090	+1740	-810	-990	+640	+2820
140	+5910	+1950	-1250	-1250	+430	+4830	+5430	+1850	-980	-1070	+680	+2990
145	+6160	+2020	-1295	-1310	+435	+5010	+5675	+1900	-1070	-1110	+690	+3085
150	+6520	+2090	-1360	-1400	+430	+5200	+5730	+1970	-1130	-1175	+700	+3150
0	+1040	+300	-144	-239	-163	+360	+339	-30	-350	-87	+11	-34

Load Per Cent	Strain (Microinches/Inch) Gage Nos. 13	14	15	16	17	18	19	20	21	22	23	24	25
0	0	0	0	0	0	0	0	0	0	0	0	0	0
100	+710	+160	-173	-150	+126	+580	+630	+5	-178	-52	-17	+213	-1915
115	+920	+240	-230	-200	+140	+760	+750	-15	-230	-80	-40	+230	-2000
130	+1030	+280	-250	-225	+170	+880	+890	-25	-265	-90	-50	+260	-2175
140	+1090	+310	-260	-240	+200	+960	+950	-20	-290	-90	-60	+280	-2250
145	+1135	+330	-270	-255	+215	+1000	+1000	-30	-300	-95	-65	+290	-2275
150	+1170	+345	-270	-265	+230	+1040	+1035	-35	-310	-100	-70	+300	-2295
0	+65	-13	-23	-30	+3	+70	-2	+19	-10	-19	-30	-3	-235

+ denotes tension.
- denotes compression.

[redacted]

UNCLASSIFIED

TABLE XI

RECORDED STRAINS IN TEST NO. 9, SIMULATING CATAPULT CONDITION C 1.1 IN STATIC TEST OF TX-28 LUGS AND SWAY BRACES

Load Per Cent	Strain (Microinches/Inch) Gage Nos. 1	2	3	4	5	6
0	0	0	0	0	0	0
100	-429	-1940	-3190	-1380	+2410	+5250
115	-690	-2570	-4190	-1970	+3150	+6910
0	-240	-1500	-2430	-530	+430	+1030
100	-625	-2600	-4170	-1810	+2760	+6050
115	-661	-2850	-4580	-2040	+3220	+7000
130	-632	-3620	-5990	-2980	+4080	+9210

Load Per Cent	Strain (Microinches/Inch) Gage Nos. 7	8	9	10	11	12	25
0	0	0	0	0	0	0	0
100	+4510	+1605	-890	-1535	-1390	+3010	+990
115	+5500	+1735	-1530	-2670	-2090	+3670	+1340
0	+110	-80	-500	-580	-790	+40	+375
100	+4510	+1575	-1380	-1980	-1940	+3120	+1280
115	+5230	+1760	-1600	-2230	-2180	+3620	+1470
130	+6420	+2080	-2660	-3250	-3210	+4610	+1870

+ denotes tension.
- denotes compression.

TABLE XII

RECORDED STRAINS IN TEST NO. 10, SIMULATING FLIGHT CONDITION F 6.1 IN STATIC TEST OF TX-28 LUGS AND SWAY BRACES

Strain (Microinches/Inch)

Load Per Cent	Gage Nos. 13	14	15	16	17	18	19	20	21	22	23	24
0	0	0	0	0	0	0	0	0	0	0	0	0
100	+3200	+730	-690	-600	+795	+2580	+3870	+530	-1220	-90	-280	+1820
115	+3700	+845	-810	-820	+970	+3030	+4560	+500	-1650	-110	-400	+2000
130	+4340	+980	-910	-980	+1160	+3440	+5300	+400	-2160	-150	-540	+2240
140	+4720	+1070	-980	-1130	+1300	+3695	+5860	+360	-2540	-170	-610	+2380
145	+4940	+1130	-1030	-1230	+1380	+3790	+6050	+310	-2790	-180	-650	+2420
150	+5130	+1170	-1050	-1310	+1440	+3900	+6400	+310	-3000	-200	-830	+2500
155	+5400	+1230	-1100	-1410	+1500	+4030	+6740	+270	-3240	-220	-910	+2590
160	+5700	+1280	-1160	-1530	+1550	+4160	+7140	+230	-3500	-230	-1000	+2660
165	+6000	+1300	-1240	-1630	+1630	+4220	+7540	+180	-3760	-250	-1090	+2750
0	+430	+10	-100	-350	+280	+135	+1040	-220	-1320	-65	-470	+55
0	0	0	0	0	0	0	0	0	0	0	0	0
100	+5000	+1170	-1040	-1190	+1240	+3580	+5620	+340	-2350	-155	-520	+2380
145	+5600	+1290	-1160	-1370	+1380	+4045	+6365	+290	-2730	-190	-650	+2580
170	+5830	+1330	-1230	-1460	+1420	+4140	+6600	+270	-2960	-215	-710	+2630
175	+6150	+1390	-1310	-1610	+1490	+4320	+7050	+220	-3230	-250	-815	+2740
180	+6580	+1460	-1410	-1770	+1560	+4510	+7490	+165	-3520	-275	-925	+2820
185	+6940	+1510	-1540	-1950	+1630	+4700	+7945	+80	-3840	-300	-1050	+2895
190	+7350	+1560	-1640	-2085	+1680	+4980	+8340	+20	-4120	-335	-1150	+2895
195	+7640	+1620	-1770	-2290	+1750	+5100	+8835	-70	-4440	-370	-1300	+3075
200	+7940	+1690	-1920	-2500	+1820	+5320	+9240	-170	-4810	-435	-1420	+3155

Aft Vertical Pull Bar Only

Pounds												
44,670	+8010					+5250	+9160					+3090
45,500	+8100					+5330	+9360					+3145
46,500	+8400					+5360	+9820					+3260
47,500	+8840					+5840	+10260					+3390
48,500	+9440					+6060	+10640					+3455
49,500	+9840					+6275	+10840					+3530
+50,500	+10000					+6490	+11100					+3600
+51,500	+10400					+6740	+11360					+3660
+52,500	+10760					+6960	Out					+3750

+ denotes tension.
- denotes compression.

[redacted]

Table XIII

[illegible] MARINER MAR FLIGHT COMPUTED STRESSES IN CRST NO. 1, [illegible] FLIGHT CONDITION F 6.7 IN STATIC TEST OF TM-28 [illegible] AND SMAY [illegible]

Computed Stresses (psi)

Load Int Gage	Rosette 1 Gages 1,2,3 Su	Rosette 1 Gages 1,2,3 Sv	Rosette 2 Gages 4,5,6 Su	Rosette 2 Gages 4,5,6 Sv	Rosette 3 Gages 7,8,9 Su	Rosette 3 Gages 7,8,9 Sv	Rosette 4 Gages 10,11,12 Su	Rosette 4 Gages 10,11,12 Sv	Rosette 5 Gages 13,14,15 Su	Rosette 5 Gages 13,14,15 Sv	Rosette 6 Gages 16,17,18 Su	Rosette 6 Gages 16,17,18 Sv	Rosette 7 Gages 19,20,21 Su	Rosette 7 Gages 19,20,21 Sv	Rosette 8 Gages 22,23,24 Su	Rosette 8 Gages 22,23,24 Sv
0	0	0	0	0	0	0	0	0	0	0	0	0	0	0	0	0
20	2500	-320	6232	1064	7566	1252	2742	-360	17478	-987	17616	1732	29743	2635	16056	-300
40	5002	-510	3519	1446	11753	2466	5876	-249	27305	-1030	30171	3462	50076	3348	26970	-1042
60	7922	-262	10933	1770	16670	3334	8331	-658	34027	-2246	38764	4436	71767	5990	37656	-1816
80	7429	-651	11820	1652	18524	3817	11518	-528	41800	-3233	51223	6001	85151	6138	45737	-3064
0	0	0	0	0	0	0	0	0	0	0	0	0	0	0	0	0
20	3045	352	6738	121	9210	1011	3130	-485	18855	-1065	19333	2260	33237	2518	15943	-447
40	5030	-860	8833	740	14414	2214	5802	-586	29473	-818	33117	4135	42316	1705	26173	-980
60	7794	-2106	12262	1473	19705	2344	8214	-723	41261	-400	45844	5709	61359	2377	37430	-1502
80	9439	-2275	14157	1679	23832	3619	13025	-890	37519	-3343	59603	7433	81435	4860	46204	-2053
100	3824	-2553	15751	1630	25331	4303	11712	-1838	46231	-5282	73690	9158	99214	5949	54303	-3442
0	746	-173	-173	-220	258	-273	93	-153	20	-1304	61	-364	-292	-1699	-238	-1321
0	0	0	0	0	0	0	0	0	0	0	0	0	0	0	0	0
Wt. Unit	2392	-121	238	-208	423	-76	626	-8	1443	-274	1042	127	2001	290	1063	-197
Wt. Unit + 1g	7795	86	2592	-1069	4761	44	2837	208	6799	-609	5837	563	8351	672	3846	-210
60	25572	839	17506	936	30161	5611	25019	2930	15721	-6242	28211	5552	43529	2500	16589	-3647
80	32745	2092	22829	1260	38596	8196	30254	3574	15880	-9344	35582	7098	60774	3029	23313	-4260
100	38873	-282	27919	1937	52326	11983	36022	3941	14471	-13389	42724	8353	69904	1255	23071	-6492
100	43316	4018	31899	2561	57649	12840	33210	3392	14363	-14406	42355	8289	72330	3630	23976	-6402
115	49775	5247	33650	-283	65816	14532	37324	3543	13029	-16751	45754	8829	79065	3014	25995	-7426
120	51574	5408	34627	45	69124	15234	38789	3601	12491	-17555	46203	8943	82270	4345	27073	-7725
130	56306	5950	38043	2583	75736	16536	41836	3554	11237	-19158	48012	9255	86906	4687	28697	-8309
140	63239	6759	40695	2584	80913	17133	+43120	+3394	10253	-20642	49519	9480	92180	5256	31168	-8832
145	64708	6446	39329	-282	84081	17854	45188	488	10628	-21147	51170	9776	82822	2798	32257	-9142
150	72410	7591	39210	-920	85937	18199	46829	355	9132	-22291	45104	4891	87698	3245	32497	-9772
0	2883	-713	422	-1236	15753	603	1611	-1430	584	-1580	130	-1169	-402	-2022	-563	-3333

+ denotes tension.
- denotes compression.

[redacted]

[redacted]

Ref. Sym: 1612 (456)
Project No. TM-520

TABLE XIV

COMPUTED MAXIMUM AND MINIMUM COMPUTED STRESSES IN TEST NO. 2, SIMULATING FLIGHT CONDITION F 6.1 IN STATIC TEST OF TX-28 LUGS AND SWAY BRACES

Computed Stresses (psi)

Load	Rosette 1 Gages 1,2,3		Rosette 2 Gages 4,5,6		Rosette 3 Gages 7,8,9		Rosette 4 Gages 10,11,12		Rosette 5 Gages 13,14,15		Rosette 6 Gages 16,17,18		Rosette 7 Gages 19,20,21		Rosette 8 Gages 22,23,24	
Per Cent	Su	Sv	Su	Sv	Su	Sv	Su	Sv	Su	Sv	Su	Sv	Su	Sv	Su	Sv
0	0	0	0	0	0	0	0	0	0	0	0	0	0	0	0	0
Wt. Unit	2584	129	234	68	607	-683	229	-154	1702	-404	1881	500	2576	22	2042	-310
Wt. Unit + 1g	8048	545	2432	-623	4758	-236	2108	3	6693	-1272	5237	391	11703	418	6009	51
20	7574	415	3527	-739	5791	13	2209	-249	13587	-1489	13464	1037	21111	2696	15035	715
40	13405	991	6360	-858	9344	606	4604	-383	33202	-1387	25569	2566	41594	4378	24579	691
60	16914	1703	8969	-527	11660	1003	5164	-642	45637	-620	39574	4361	58598	5898	35834	526
80	20617	2448	12448	-237	13804	1120	5823	-773	58411	25	49634	5555	76930	7694	46215	317
100	24410	3026	14584	-188	15383	1199	6938	-758	69339	1167	59746	6914	92340	8348	54631	-91
0	303	303	172	54	-108	-344	334	-485	559	-126	145	-578	2355	-624	1842	-110
100	24403	3033	14797	127	14454	772	6593	-789	70306	1549	60779	7180	93923	9037	55196	-223
110	26430	3444	16596	287	15698	834	6970	-864	74014	1753	64331	7740	100627	9751	58309	-373
115	27381	3597	17096	315	15936	872	7112	-931	76254	2094	66412	8256	104032	10026	60696	-529
130	29935	3908	18892	479	17351	1040	7755	-972	84731	2707	73620	9056	116542	11151	67301	-1074
0	575	255	183	114	-101	-563	-45	-456	-125	-2905	-152	-4393	434	-650	1129	-47

+ denotes tension.
- denotes compression.

[redacted]

TABLE XV

COMPUTED MAXIMUM AND MINIMUM COMPUTED STRESSES IN TEST NO. 3, SIMULATING FLIGHT CONDITION F 6.1 IN STATIC TEST OF TX-28 LUGS AND SWAY BRACES

Computed Stresses (psi)

Load Per Cent	Rosette 1 Gages 1,2,3		Rosette 2 Gages 4,5,6		Rosette 3 Gages 7,8,9		Rosette 4 Gages 10,11,12		Rosette 5 Gages 13,14,15		Rosette 6 Gages 16,17,18		Rosette 7 Gages 19,20,21		Rosette 8 Gages 22,23,24	
	Su	Sv	Su	Sv	Su	Sv	Su	Sv	Su	Sv	Su	Sv	Su	Sv	Su	Sv
0	0	0	0	0	0	0	0	0	0	0	0	0	0	0	0	0
Wt. Unit	622	-170	232	-21	383	-157	230	-34	149	-409	231	-188	449	-449	513	50
Wt. Unit + 1g	6312	-26	1830	-669	4656	-58	1544	-572	5285	-653	4235	-80	5952	-1[illegible]	2138	329
20	7339	33	2634	-856	5133	-263	2430	-697	21270	-104	16269	699	21066	-73	10290	1007
40	9672	-115	3556	-993	7185	66	3754	-648	30704	-707	28076	1445	34914	1014	17746	1646
60	11050	75	4590	-927	8634	320	4473	-674	55584	2418	41015	2228	46385	363	25559	1798
80	12309	294	5754	-900	9770	450	5322	-543	71427	4021	54411	3159	57183	127	31589	2650
100	14103	550	6590	-937	10755	641	6117	-479	86402	5754	67353	4068	67389	-383	37158	2381
115	16407	1004	7793	-1160	12697	1111	6549	-820	100967	7680	74916	3431	72760	-472	41472	3545
130	20094	1256	8180	-944	13000	1019	6163	-1038	109841	8761	81610	3763	80983	-2203	46117	3229
140	23302	2325	13683	-267	17826	1621	6811	-1686	110741	8723	76523	3555	82319	-1307	49078	3298
145	23696	2308	14082	-213	18112	1787	6800	-1765	112353	8847	77537	3408	81482	1193	49179	2744
150	24532	2452	14568	-247	18439	1912	7115	-1688	114427	9379	79347	3761	87517	-3109	50769	2472
Wt. Unit	348	26	19	-95	-197	-677	122	-258	5652	-458	2601	-1519	1576	-3204	-668	-1843
Wt. Unit + 1g	639	-247	6	-112	-340	-564	-6	-205	701	-658	-60	-2581	-2748	-4221	-1497	-3481

+ denotes tension.
- denotes compression.

[redacted]

[redacted]

TABLE XVI

COMPUTED MAXIMUM AND MINIMUM COMPUTED STRESSES IN TEST NO. 4, SIMULATING FLIGHT CONDITION F 6.3 IN STATIC TEST OF TX-28 LUGS AND SWAY BRACES

Computed Stresses (psi)

Load Per Cent	Rosette 1 Gages 1, 2, 3 Su	Rosette 1 Gages 1, 2, 3 Sv	Rosette 2 Gages 4, 5, 6 Su	Rosette 2 Gages 4, 5, 6 Sv	Rosette 3 Gages 7, 8, 9 Su	Rosette 3 Gages 7, 8, 9 Sv	Rosette 4 Gages 10, 11, 12 Su	Rosette 4 Gages 10, 11, 12 Sv
0	0	0	0	0	0	0	0	0
Wt. Unit	2369	-499	749	-146	2066	-227	974	-85
Wt. Unit + 1g	6533	-744	1858	-879	4588	-6	2185	-466
20	14127	-1917	10364	-264	14844	1588	7232	-750
40	20787	-888	16644	692	21876	3073	11372	-368
60	27775	640	23063	1358	28738	4652	15662	167
80	34313	2168	28728	2025	35452	6531	19539	510
100	41202	3645	34968	2568	42984	8722	23204	524
0	102	3	-67	-99	-356	-1619	-328	-1089

Load Per Cent	Rosette 5 Gages 13, 14, 15 Su	Rosette 5 Gages 13, 14, 15 Sv	Rosette 6 Gages 16, 17, 18 Su	Rosette 6 Gages 16, 17, 18 Sv	Rosette 7 Gages 19, 20, 21 Su	Rosette 7 Gages 19, 20, 21 Sv	Rosette 8 Gages 22, 23, 24 Su	Rosette 8 Gages 22, 23, 24 Sv
0	0	0	0	0	0	0	0	0
Wt. Unit	-40	-306	224	122	240	-110	319	27
Wt. Unit + 1g	5990	-666	4679	-263	6233	174	3234	12
20	6320	-1558	4874	-762	6606	-546	2509	-561
40	9929	-1272	9106	-232	11346	-957	3782	-752
60	14794	-942	12812	174	14770	-918	6070	510
80	18039	-508	17337	626	19673	-1493	5828	-634
100	21562	-136	21017	1059	23245	-1602	8260	-469
0	-179	-211	97	-227	7	-526	662	161

+ denotes tension.
- denotes compression.

[redacted]

0689

[redacted]

Ref. Sym: 1612 (456)
Project No. TM-520

TABLE XVII

COMPUTED MAXIMUM AND MINIMUM COMPUTED STRESSES IN TEST NO. 5, SIMULATING CATAPULT CONDITION C 1.1 IN STATIC TEST OF TX-28 LUGS AND SWAY BRACES

Computed Stresses (psi)

Load Per Cent	Rosette 1 Gages 1, 2, 3 Su	Rosette 1 Gages 1, 2, 3 Sv	Rosette 2 Gages 4, 5, 6 Su	Rosette 2 Gages 4, 5, 6 Sv	Rosette 3 Gages 7, 8, 9 Su	Rosette 3 Gages 7, 8, 9 Sv	Rosette 4 Gages 10, 11, 12 Su	Rosette 4 Gages 10, 11, 12 Sv
0	0	0	0	0	0	0	0	0
Wt. Unit	2014	-733	499	-242	1226	-427	1319	98
Wt. Unit + 1g	1619	-2644	2032	-1384	4912	-118	3107	-318
20	1027	-9393	11212	139	14168	1208	9023	-2088
40	-4973	-15438	20790	1761	23990	3687	16349	-3219
60	-9156	-21069	30364	3192	33670	5916	22928	-4748
80	-12070	-26023	39123	4216	42375	7447	28317	-6760
100	-12155	-28954	45211	4686	47963	7662	32507	-7785
0	-2569	-7366	1371	-467	-1326	-2443	164	-1642

Load Per Cent	Rosette 5 Gages 13, 14, 15 Su	Rosette 5 Gages 13, 14, 15 Sv	Rosette 6 Gages 16, 17, 18 Su	Rosette 6 Gages 16, 17, 18 Sv	Rosette 7 Gages 19, 20, 21 Su	Rosette 7 Gages 19, 20, 21 Sv	Rosette 8 Gages 22, 23, 24 Su	Rosette 8 Gages 22, 23, 24 Sv
0	0	0	0	0	0	0	0	0
Wt. Unit	-410	-845	464	-118	650	129	-143	-463
Wt. Unit + 1g	4787	-1195	4038	-575	6923	46	2484	-622
20	1437	-918	2427	-263	4057	55	928	-884
40	515	-731	2089	-98	2915	115	229	-748
60	-123	-397	1461	-33	1894	11	-76	-963
80	-1617	-4011	2420	90	4736	-321	-11	-1764
100	-8086	-13514	5850	-785	10309	-787	1757	-4051
0	-411	-1147	17	-320	44	-477	-726	-1525

+ denotes tension.
- denotes compression.

[redacted]

0690

[redacted]

UNCLASSIFIED

Ref. Sym: 1612 (456)
Project No. TM-520

TABLE XVIII

COMPUTED MAXIMUM AND MINIMUM COMPUTED STRESSES IN TEST NO. 6, SIMULATING CATAPULT CONDITION C 1.1 IN STATIC TEST OF TX-28 LUGS AND SWAY BRACES

Computed Stresses (psi)

Load Per Cent	Rosette 1 Gages 1,2,3		Rosette 2 Gages 4,5,6		Rosette 3 Gages 7,8,9		Rosette 4 Gages 10,11,12		Rosette 5 Gages 13,14,15		Rosette 6 Gages 16,17,18		Rosette 7 Gages 19,20,21		Rosette 8 Gages 22,23,24	
	Su	Sv	Su	Sv	Su	Sv	Su	Sv	Su	Sv	Su	Sv	Su	Sv	Su	Sv
0	0	0	0	0	0	0	0	0	0	0	0	0	0	0	0	0
Wt. Unit	3098	-188	542	-301	1713	-386	695	-32	3740	199	2090	-532	718	-26	672	-109
Wt. Unit + 1g	7556	-48	2368	-1193	4454	-279	2076	-629	8513	-851	4113	-828	5316	95	2776	124
20	12234	-9	6470	-726	10190	709	5270	-898	-6397	-3383	8470	-895	16675	-789	4970	-2719
40	21117	5354	10197	-353	15480	1736	8790	-559	-17937	-22751	16150	-3164	26097	-1545	8580	-6718
60	28453	772	13581	-44	19487	2537	11726	-103	-25466	-37428	24749	-4708	36593	-2440	12221	-10679
80	28724	1471	16824	195	23089	3322	14024	207	-30617	-46302	33190	-5833	46623	-3234	16005	-14797
100	34165	2346	20631	459	27069	4196	16865	652	-34543	-55527	39799	-7162	55403	-4066	19148	-18412
0	407	106	-125	-222	-110	-975	-139	-509	-1622	-4048	914	-741	2177	-532	123	-359
115	37564	2761	24194	302	29934	4647	18357	1225	-38393	-62030	45905	-8030	64605	-5130	23111	-22158
130	40250	3090	26495	337	32349	5036	19914	1266	-42106	-68056	51323	-9552	71535	-6823	25331	-25764
140	42498	3630	28035	456	34234	5563	21094	1367	-44125	-71881	55406	-10956	75951	-7559	26830	-27972
145	43956	3906	29041	581	35208	5795	23736	7182	-45345	-74557	57032	-10233	77459	-8202	27480	-28995
150	45235	4210	29770	530	36130	6004	22087	1354	-3847	-37079	58099	-10735	79122	-8567	28336	-30067
0	1476	197	-332	-543	-662	-2112	-354	-1124	-2604	-6436	600	-1312	1030	-2112	-1022	-2008

+ denotes tension.
- denotes compression.

UNCLASSIFIED

[redacted]

TABLE XIX

COMPUTED MAXIMUM AND MINIMUM COMPUTED STRESSES IN TEST NO. 7, SIMULATING ARRESTED LANDING CONDITION A 5.1 IN STATIC TEST OF TX-28 LUGS AND SWAY BRACES

Computed Stresses (psi)

Load Per Cent	Rosette 1 Gages 13,14,15 Su	Rosette 1 Gages 13,14,15 Sv	Rosette 2 Gages 16,17,18 Su	Rosette 2 Gages 16,17,18 Sv	Rosette 3 Gages 19,20,21 Su	Rosette 3 Gages 19,20,21 Sv	Rosette 4 Gages 22,23,24 Su	Rosette 4 Gages 22,23,24 Sv
0	0	0	0	0	0	0	0	0
20	26870	1309	10921	-3173	-757	-3052	11218	2634
40	51537	3393	25076	-4559	1767	-4710	21993	5407
60	77766	5689	38860	-5401	7809	-5861	32642	8047
80	104568	8494	54903	-5860	9724	-8771	41879	10108
100	147777	13679	72691	-7503	20323	-9069	52657	19414
0	9304	1517	-514	-2170	3487	193	-1977	-5166
0	0	0	0	0	0	0	0	0
20	17562	1181	6469	-2270	-503	-796	7338	1146
40	39019	371	17071	-5816	-4763	-6708	17650	2478
60	60809	19955	27466	-7987	-7197	-10334	26833	4333
80	82605	3534	36855	-10450	-9428	-13730	36981	6737
100	104547	5615	47654	-12376	-10772	-18446	45362	8529
115	121877	7331	55047	-13926	-11463	-21867	51463	9570
130	141639	9212	63332	-15501	-12198	-25461	57306	10869
140	156209	10225	68198	-17121	-12886	-28235	60492	10929
145	165141	10383	71589	-17915	-13414	-29871	61891	11045
150	172304	10362	73444	-18255	-13743	-31058	63507	11377
0	14128	-1143	38	-1553	-1154	-1876	-2923	-3570
0	0	0	0	0	0	0	0	0
100	101614	4869	43790	-13274	-6607	-18066	44491	7885
115	115639	5728	51807	-15014	-8295	-22005	50467	9267
130	134464	7730	60107	-16172	-7795	-25535	56693	11049
140	146993	8403	65798	-17534	-8903	-28323	60573	11714
145	152585	8654	67226	-13313	-8988	-29537	61533	11404
150	160862	9034	70091	-19014	-9019	-30804	63252	11633
0	-1392	-1508	-1677	-2002	-799	-1149	-1795	-3486
0	0	0	0	0	0	0	0	0
150	165967	11072	72925	-23580	-12668	-34080	61795	9194
155	166329	10710	74689	-23179	30556	-4368	60782	9774
160	174450	11030	77229	-24420	-15271	-31477	63626	10176
165	181561	10628	80476	-25070	-16632	-31848	66024	11024
0	320	-580	-1355	-2757	4553	-3255	-2138	-3922

+ denotes tension.
- denotes compression.

TABLE XX

COMPUTED MAXIMUM AND MINIMUM COMPUTED STRESSES IN TEST NO. 8, SIMULATING FLIGHT CONDITION F 6.3 IN STATIC TEST OF TX-28 LUGS AND SWAY BRACES

Computed Stresses (psi)

Load Per Cent	Rosette 1 Gages 1, 2, 3 Su	Rosette 1 Gages 1, 2, 3 Sv	Rosette 2 Gages 4, 5, 6 Su	Rosette 2 Gages 4, 5, 6 Sv	Rosette 3 Gages 7, 8, 9 Su	Rosette 3 Gages 7, 8, 9 Sv	Rosette 4 Gages 10, 11, 12 Su	Rosette 4 Gages 10, 11, 12 Sv
0	0	0	0	0	0	0	0	0
100	44347	-9154	38492	-9129	41637	-3840	22704	-7398
115	48060	-9534	41661	-10112	45020	-4516	25564	-8175
130	54761	-9988	46985	-12000	50896	-6331	28027	-8973
140	58864	-10342	50648	-13372	54711	-7855	29692	-9701
145	61374	-10718	52542	-14016	56198	-8666	30644	-10080
150	65038	-11310	54507	-14940	57017	-9745	31250	-10686
0	10530	-1201	4222	-2962	3262	-3377	37	-1818

Load Per Cent	Rosette 5 Gages 13, 14, 15 Su	Rosette 5 Gages 13, 14, 15 Sv	Rosette 6 Gages 16, 17, 18 Su	Rosette 6 Gages 16, 17, 18 Sv	Rosette 7 Gages 19, 20, 21 Su	Rosette 7 Gages 19, 20, 21 Sv	Rosette 8 Gages 22, 23, 24 Su	Rosette 8 Gages 22, 23, 24 Sv
0	0	0	0	0	0	0	0	0
100	21962	1283	17890	723	20303	-738	7243	-274
115	28287	1580	23543	697	24091	-1583	7656	-1163
130	31717	2046	27301	1051	28808	-1755	8729	-1370
140	33570	2357	29769	1396	30550	-1981	9626	-1402
145	34940	2502	30905	1343	32352	-2052	9976	-1535
150	36102	2855	32108	1438	33538	-2156	10325	-1668
0	2179	-361	2072	-341	319	-338	-5	-947

+ denotes tension.
- denotes compression.

TABLE XXI

COMPUTED MAXIMUM AND MINIMUM COMPUTED STRESSES IN TEST NO. 9, SIMULATING CATAPULT CONDITION C 1.1 IN STATIC TEST OF TX-28 LUGS AND SWAY BRACES

Computed Stresses (psi)

Load Per Cent	Rosette 1 Gages 1, 2, 3 Su	Rosette 1 Gages 1, 2, 3 Sv	Rosette 2 Gages 4, 5, 6 Su	Rosette 2 Gages 4, 5, 6 Sv	Rosette 3 Gages 7, 8, 9 Su	Rosette 3 Gages 7, 8, 9 Sv	Rosette 4 Gages 10, 11, 12 Su	Rosette 4 Gages 10, 11, 12 Sv
0	0	0	0	0	0	0	0	0
100	-16956	-37599	54097	4242	47441	7130	34289	-12054
115	-23720	-49844	70669	3799	56153	3693	38008	-22933
0	-11881	-23367	9727	-2190	-513	-5366	436	-3576
100	-22862	-49421	61597	2320	45513	1670	35226	-18041
115	-24318	-54189	71478	3292	52784	1937	41006	-20052
130	-29839	-69986	92891	1024	62167	-5486	51411	-30910

+ denotes tension.
- denotes compression.

TABLE XXII

COMPUTED MAXIMUM AND MINIMUM COMPUTED STRESSES IN TEST NO. 10, SIMULATING FLIGHT CONDITION F 6.1 IN STATIC TEST OF TX-28 LUGS AND SWAY BRACES

Computed Stresses (psi)

Load Per Cent	Rosette 1 Gages 13, 14, 15 Su	Rosette 1 Gages 13, 14, 15 Sv	Rosette 2 Gages 16, 17, 18 Su	Rosette 2 Gages 16, 17, 18 Sv	Rosette 3 Gages 19, 20, 21 Su	Rosette 3 Gages 19, 20, 21 Sv	Rosette 4 Gages 22, 23, 24 Su	Rosette 4 Gages 22, 23, 24 Sv
0	0	0	0	0	0	0	0	0
100	103563	8979	78415	3395	118268	-3561	71505	3379
115	119069	9923	91917	3744	137197	-11236	79958	1852
130	136513	11958	103744	2739	157269	-21351	90583	-116
140	148572	13316	110632	396	172299	-28591	98132	-2470
145	155376	13871	112795	-1984	175943	-34831	100511	-3551
150	161642	14964	115661	-3551	185560	-38389	104528	-4971
155	170232	15897	118997	-5589	194661	-43161	109171	-6151
160	179820	16698	122139	-8298	205634	-48074	113013	-7828
165	189325	16715	126041	-11766	216393	-53639	117608	-9394
0	14156	128	6721	-13864	31269	-30404	10495	-10928
0	0	0	0	0	0	0	0	0
150	157140	14272	109521	-1740	166501	-24956	95373	937
165	176184	16005	119758	-3969	187549	-32370	104433	-980
170	183193	15921	121998	-5992	193583	-36023	106813	-2278
175	193157	16346	126461	-9157	206289	-40938	112041	-4260
180	206714	17073	131170	-12567	218385	-46541	116485	-6323
185	217482	16261	135704	-16669	230807	-53119	121035	-8708
190	226876	15957	140315	-19331	241460	-58794	122064	-11253
195	238654	15433	145600	-23967	254786	-66277	130800	-13712
200	250455	14454	150851	-28785	265369	-73614	135726	-15825

+ denotes tension.
- denotes compression.

TABLE XXIII

DEFORMATION OF CASE IN TEST NO. 1 SIMULATING FLIGHT CONDITION 6.7 IN STATIC TEST OF TX-28 LUGS AND SWAY BRACES

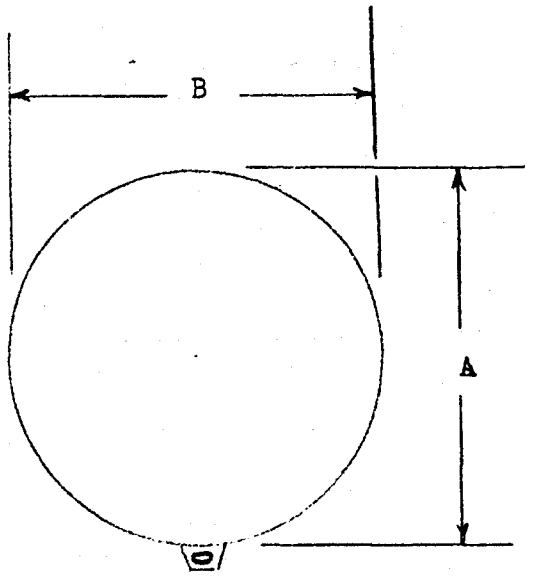

Distances Measured With a Micrometer

Deformation (Inches)

Load Per Cent	Case Around Forward Lug A	Case Around Forward Lug B	Case Around Aft Lug A	Case Around Aft Lug B
0	0	0	0	0
100	.014	-.015	.025	-.009
0	-.001	-.004	.011	-.011
130	.020	-.026	.018	.006
0	-.002	-.026	.002	.003

TABLE XXIV

DEFORMATION OF CASE IN TEST NO. 2, SIMULATING FLIGHT CONDITION F 6.1 IN STATIC TEST OF TX-28 LUGS AND SWAY BRACES

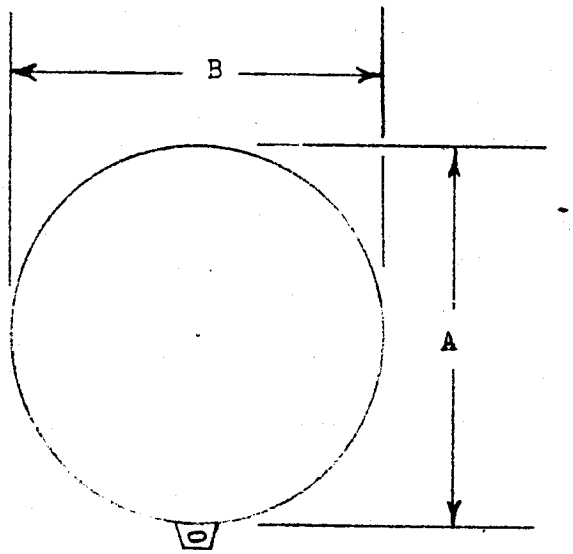

Distances Measured With a Micrometer

Load Per Cent	Deformation (Inches) Case Around Forward Lug A	Case Around Forward Lug B	Case Around Aft Lug A	Case Around Aft Lug B
0	.000	.000	.000	.000
100	.011	-.003	.017	-.006
0	-.002	.003	-.004	.000
130	.015	-.007	.024	-.009
0	-.005	.008	-.003	-.010

[redacted]

UNCLASSIFIED

Ref. Sym: 1612 (456)
Project No. TM-520

TABLE XXV

DEFORMATION OF CASE IN TEST NO. 4, SIMULATING FLIGHT CONDITION F 6.3 IN STATIC TEST OF TX-28 LUGS AND SWAY BRACES

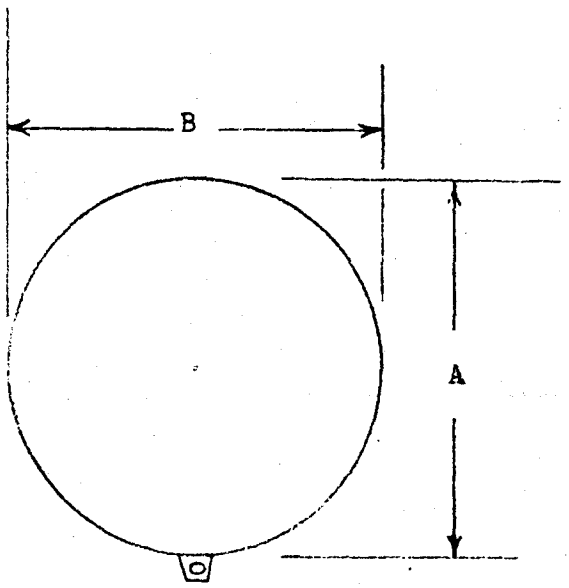

Distances Measured With a Micrometer

Load Per Cent	Deformation (Inches) Case Around Forward Lug A	Case Around Forward Lug B	Case Around Aft Lug A	Case Around Aft Lug B
0	.000	.000	.000	.000
100	.010	-.023	.010	.002
0	.000	.000	-.004	.000

UNCLASSIFIED

[redacted]

TABLE XXVI

DEFORMATION OF CASE IN TEST NO. 5 SIMULATING CATAPULT CONDITION C 1.1 IN STATIC TEST OF TX-28 LUGS AND SWAY BRACES

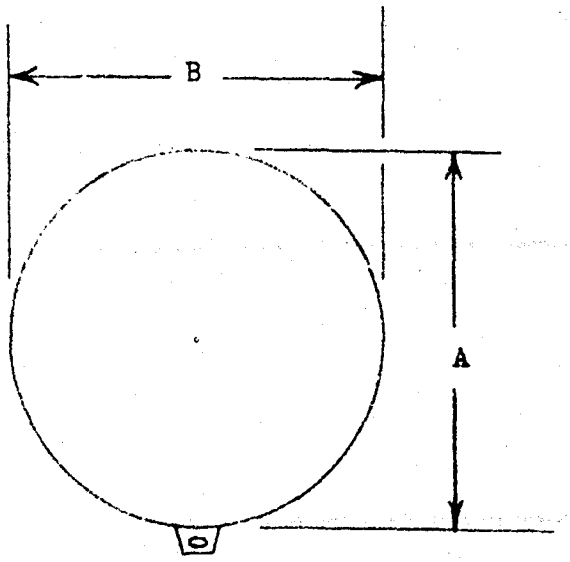

Distances Measured with a Micrometer

Load Per Cent	Deformation (Inches) Case Around Forward Lug A	Case Around Forward Lug B	Case Around Aft Lug A	Case Around Aft Lug B
0	.000	.000	.000	.000
100	.004	-.022	-.002	.001
0	-.009	.001	.000	-.002

TABLE XXVII

DEFORMATION OF CASE IN TEST NO. 6 SIMULATING CATAPULT CONDITION C 1.1 IN STATIC TEST OF TX-28 LUGS AND SWAY BRACES

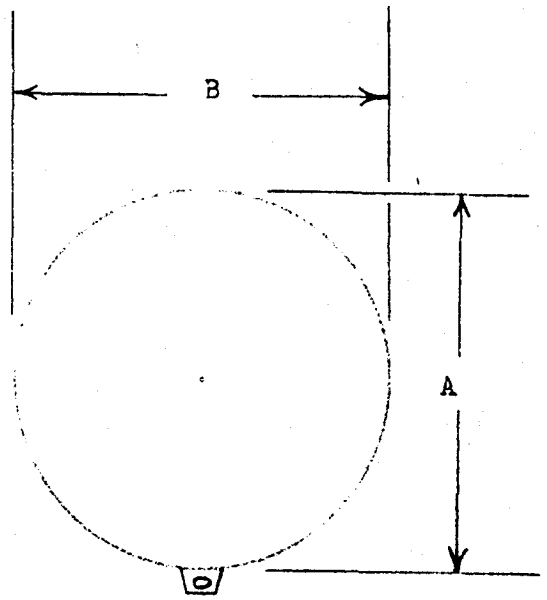

Distances Measured with a Micrometer

Load Per Cent	Deformation (Inches) Case Around Forward Lug A	Case Around Forward Lug B	Case Around Aft Lug A	Case Around Aft Lug B
0	.000	.000	.000	.000
100	.009	-.022	.001	.004
0	.006	-.002	.001	.000
150	.014	-.024	.007	.006
0	.008	-.001	.000	.001

[redacted]

UNCLASSIFIED

Ref. Sym: 1612 (456)
Project No. TM-520

TABLE XXVIII

DEFORMATION OF CASE IN TEST NO. 7, SIMULATING ARRESTED LANDING CONDITION
A 5.1 IN STATIC TEST OF TX-28 LUGS AND SWAY BRACES

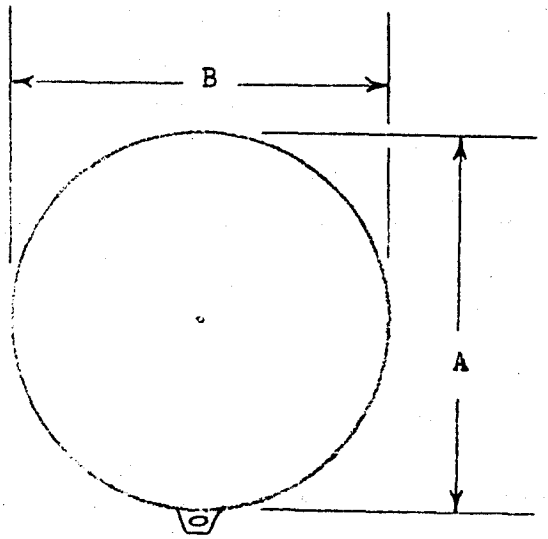

Distances Measured with a Micrometer

Load Per Cent	Deformation (Inches) Case Around Forward Lug A	Case Around Forward Lug B	Case Around Aft Lug A	Case Around Aft Lug B
0	No Readings Taken		.000	.000
100			-.004	-.020
0			-.003	-.001

UNCLASSIFIED

[redacted]

TABLE XXIX

RECORDED STRAINS IN TEST NO. 11, SIMULATING FLIGHT CONDITION F 6.3 IN STATIC TEST OF TX-28 LUGS AND SWAY BRACES

Strain (Microinches/Inch)

Load Per Cent	Gage Nos. 1	2	3	4	5	6	7	8	9	10	11	12	25
0	0	0	0	0	0	0	0	0	0	0	0	0	0
Wt. Unit + 1g	+77	+207	+202	+54	-155	-300	-145	+36	+78	+77	+55	-110	+45
20	+124	+200	+49	-156	+210	+482	+462	+166	-243	-215	-24	+330	-105
40	+324	+225	-215	-416	+620	+1310	+1500	+203	-584	-440	-45	+835	-360
60	+975	+388	-310	-614	+776	+1775	+2270	+421	-834	-744	+100	+1440	-507
80	+1600	+126	-595	-861	+990	+2370	+3070	+533	-1160	-994	+228	+2020	-650
100	+2150	+664	-805	-1100	+1260	+3070	+3970	+714	-1550	-1335	+328	+2640	-830
105	+2600	+734	-962	-1315	+1445	+3450	+4725	+850	-1850	-1600	+424	+3140	-830
110	+3020	+795	-1155	-1455	+1650	+3860	+5495	+950	-2220	-1880	+500	+3630	-890
115	+3330	+830	-1275	-1540	+1800	+4120	+6020	+1000	-2500	-2080	+540	+3950	-890
120	+3500	+830	-1340	-1640	+1880	+4300	+6340	+1000	-2700	-2190	+560	+4110	-910
125	+3590	+840	-1400	-1690	+1960	+4400	+6600	+1000	-2860	-2290	+560	+4240	-930
Wt. Unit + 1g	-142	+126	+255	-910	-72	-251	+226	-208	-400	0	-118	-349	+77
0	-264	+108	+288	-31	-46	-211	+197	-219	-390	+11	-161	-400	+117
0	0	0	0	0	0	0	0	0	0	0	0	0	0
100	+1530	+160	-760	-200	+350	+1190	+3520	+1240	-650	+320	-10	+630	-1040
115	+2340	+280	-1090	-350	+500	+1380	+3920	+1200	-750	+230	-40	+760	-1130
130	+3200	+290	-1560	-500	+480	+1600	+4316	+1530	-350	+70	-140	+920	-1260
140	+3650	+320	-1850	-630	+450	+1720	+4560	+1640	-920	-40	-210	+1040	-1340
145	+3820	+310	-1990	-680	+420	+1800	+4710	+1650	-950	-90	-220	+1110	-1410
150	+4000	+350	-2150	-710	+430	+1850	+4840	+1700	-1000	-160	-230	+1180	-1450
155	+4270	+300	-2280	-770	+430	+1930	+4900	+1780	-1020	-240	-250	+1230	-1470
160	+4370	+360	-2380	-800	+420	+1980	+5140	+1800	-1050	-270	-270	+1360	-1500
165	+4640	+350	-2570	-840	+420	+2060	+5270	+1830	-1080	-340	-300	+1450	-1550
170	+4770	+360	-2660	-870	+420	+2130	+5400	+1850	-1130	-400	-300	+1550	-1560
175	+4975	+370	-2850	-910	+430	+2200	+5570	+1890	-1190	-470	-310	+1660	-1640
180	+5220	+410	-3000	-950	+410	+2230	+5750	+1930	-1230	-540	-300	+1730	-1670
185	+5470	+410	-3270	-1000	+440	+2300	+5940	+1980	-1280	-630	-300	+1910	-1710
190	+5830	+310	-3850	-1020	+420	+2360	+6080	+2020	-1290	-760	-360	+2090	-1790
195	+6000	+320	-4010	-1080	+470	+2410	+6240	+2050	-1360	-850	-380	+2220	-1820
200	+6120	+290	-4250	-1000	+500	+2470	+6380	+2080	-1390	-900	-390	+2340	-1910
0	+1050	-594	-237	+450	-70	-630	-70	+10	+20	+110	-410	-500	+20

+ denotes tension.
- denotes compression.

TABLE XXX

RECORDED STRAINS IN TEST NO. 12, SIMULATING CATAPULT CONDITION C 1.1 IN STATIC TEST OF TX-28 LUGS AND GRAY BRACES

Strain (Microinches/Inch)

Load Per Cent	Gage Nos. 1	2	3	4	5	6	7	8	9	10	11	12	22
0	0	0	0	0	0	0	0	0	0	0	0	0	0
Wt. Unit + 1g	+246	+37	-39	-3	-71	-65	+26	+7	-21	-15	+35	+28	-23
20	+132	-176	-434	-330	+602	+1110	+1310	+162	-508	-498	-62	+900	-110
40	-216	-216	-749	-508	+1200	+1960	+2440	+331	-1115	-930	-140	+1670	-160
60	-438	-510	-854	-637	+1725	+2610	+3325	+460	-1430	-1245	-454	+2290	-194
80	-718	-799	-929	-765	+2200	+3240	+4240	+610	-1825	-1665	-350	+2865	-234
100	-878	-814	-1045	-910	+2610	+3840	+5100	+750	-2140	-1865	-385	+3465	-310
115	-980	-990	-1110	-1010	+2920	+4240	+5640	+920	-2380	-2050	-220	+3870	-340
130	-1075	-970	-1190	-1150	+3470	+4700	+6300	+900	-2600	-2310	-460	+4350	-390
140	-1135	-1020	-1260	-1260	+3530	+5110	+6760	+920	-2750	-2550	-510	+4700	-410
145	-1630	-1240	-660	-2870	+1970	+4[illegible]	+8120	+1700	-2480	-1560	+44	+4010	-531
150	-1770	-1330	-650	-2830	+2050	+5050	+4410	+1830	-2560	-1590	+8	+4070	-566
0	-269	+98	+232	-2630	+764	+2170	+1870	+24	-1140	-1360	+370	+1580	-75
0	0	0	0	0	0	0	0	0	0	0	0	0	0
100	-2410	-750	-1560	-170	+1980	+1330	+4960	+1340	-1130	-400	-670	+1600	-640
130	-2660	-950	-1300	-30	+2740	+3510	+6270	+1630	-1460	-620	-810	+2130	-710
140	-2730	-1040	-1970	-20	+2900	+4770	+6640	+1700	-1570	-700	-820	+2330	-300
145	-2750	-1030	-2020	-2	+2830	+3010	+6940	+1660	-1660	-740	-900	+2390	-330
150	-2770	-1040	-2070	0	+3120	+4070	+7120	+1740	-1770	-770	-950	+2480	-340
155	-2800	-1050	-2110	+40	+3220	+3350	+7370	+1740	-1390	-820	-980	+2560	-360
160	-2820	-1130	-2150	+50	+3340	+3150	+7660	+1780	-2000	-850	-1000	+2610	-370
165	-2870	-1120	-2130	+70	+3480	+3220	+7990	+1760	-2140	-910	-1050	+2710	-330
0	-430	+56	-1500	+20	-40	-70	+370	-130	-290	+230	+40	-330	-160

+ denotes tension.
- denotes compression.

[redacted]

TABLE XXXI

COMPUTED MAXIMUM AND MINIMUM COMPUTED STRESSES IN TEST NO. 11, SIMULATING FLIGHT CONDITION F 6.3 IN STATIC TEST OF TX-28 LUGS AND SWAY BRACES

Load Per Cent	Rosette 1 Gages 1,2,3		Rosette 2 Gages 4,5,6		Rosette 3 Gages 7,8,9		Rosette 4 Gages 10,11,12	
	Su	Sv	Su	Sv	Su	Sv	Su	Sv
0	0	0	0	0	0	0	0	0
Wt. Unit + 1g	2788	1418	-515	-3193	473	-1483	607	-1240
20	2194	414	4847	53	6542	-226	3719	-1081
40	3178	-1565	13290	187	14889	-1081	8109	-2155
60	9573	-603	17761	-259	22586	-939	13581	-3089
80	15746	-596	23526	-778	30375	-1582	19150	-3683
100	21136	-860	30203	-1863	39114	-2633	24826	-5154
115	25618	-926	34048	-1863	46528	-3189	29436	-6221
130	30320	-1302	38187	-1933	53851	-4482	33887	-7506
140	32691	-1713	40851	-1958	58742	-5679	36729	-8540
145	34390	-1829	42533	-2434	61630	-6759	38107	-9164
150	35175	-2162	43535	-2683	63989	-7609	39197	-9801
Wt. Unit + 1g	2417	-714	-970	-2964	1186	-3809	-1265	-3996
0	2356	-1994	-952	-2696	913	-3822	-1382	-4482
0	0	0	0	0	0	0	0	0
100	14490	-2882	12747	2177	37220	6045	10950	3370
115	22443	-3600	14203	1324	41329	6458	11906	3018
130	30511	-5789	16124	458	45410	6838	13150	1774
140	34487	-7353	16991	-559	47875	6996	14177	898
145	35881	-8294	17731	-847	49475	7205	14722	654
150	37230	-9342	18177	-992	50740	7146	15119	258
155	39920	-9921	18854	-1367	52113	7432	15892	-214
160	40562	-10564	19318	-1530	53938	7718	16795	-364
165	42917	-11712	20081	-1690	55297	7866	17580	-847
170	44037	-12229	20771	-1777	56580	7789	18420	-1084
175	45593	-13559	21408	-1962	58272	7755	19373	-1434
180	47767	-14301	21606	-2311	60163	7975	20367	-1674
185	49514	-16349	22180	-2583	62121	8127	21409	-2113
190	51305	-21457	22817	-2617	63675	8532	23091	-3042
195	52592	-22593	23095	-3045	65216	8348	24233	-3581
200	52987	-24798	24113	-1953	66694	8528	25471	-3764
0	14983	-2727	2666	-5379	47	-801	-162	-5717

+ denotes tension.
- denotes compression.

[redacted]

UNCLASSIFIED

Ref. Sym: 1612 (456)
Project No. TM-520

TABLE XXXII

COMPUTED MAXIMUM AND MINIMUM COMPUTED STRESSES IN TEST NO. 12, SIMULATING CATAPULT CONDITION C 1.1 IN STATIC TEST OF TX-28 LUGS AND SWAY BRACES

Load	Rosette 1 Gages 1,2,3		Rosette 2 Gages 4,5,6		Rosette 3 Gages 7,8,9		Rosette 4 Gages 10,11,12	
Per Cent	Su	Sv	Su	Sv	Su	Sv	Su	Sv
0	0	0	0	0	0	0	0	0
Wt. Unit + 1g	1506	107	221	-643	274	-17	364	-168
20	-154	-4414	11668	392	12613	-1880	8589	-2529
40	-5229	-9318	20784	1105	23446	-3472	16084	-4930
60	-8719	-11662	28147	1595	32833	-4115	22247	-6494
80	-11255	-13573	35193	2117	41686	-4678	27904	-8307
100	-13233	-15756	41340	2226	49799	-5178	33883	-9462
115	-14502	-17004	45982	2407	55023	-5880	37873	-10437
130	-15789	-18355	51576	2542	61340	-6921	42501	-11749
140	-16651	-19453	55567	2471	65592	-8158	45655	-13244
145	-17004	-32591	45183	-14431	82700	2321	40984	-4051
150	-17126	-33374	46884	-13418	85727	2460	41668	-4283
0	1801	-2223	15869	-22804	16989	-5984	12770	-9454
0	0	0	0	0	0	0	0	0
100	-20713	-40641	24959	2326	51934	5802	21077	-2987
130	-23881	-44709	33713	4727	65597	6912	27528	-4011
140	-25129	-45722	36112	5343	69396	7033	29097	-4526
145	-25507	-46399	37613	7762	71427	6659	29774	-4901
150	-25883	-47078	38827	5945	74136	6514	30967	-5190
155	-26239	-47777	40052	6529	76563	6046	31766	-5537
160	-26854	-48067	41465	6774	79454	5869	32283	-5752
165	-27343	-48935	42798	6798	82780	5407	33371	-6237
0	-6262	-23586	-24	-730	3366	-2160	1436	-2943

+ denotes tension.
- denotes compression.

UNCLASSIFIED

[redacted]

TABLE XXXIII

RECORDED STRAINS IN TEST NO. 13, SIMULATING FLIGHT CONDITION F 6.3 IN STATIC TEST OF TX-28 LUGS AND SWAY BRACES

Strain (Microinches/Inch)

Load Per Cent	Gage No. 1	2	3	4	5	6	7	8	9	10	11	12	25
0	0	0	0	0	0	0	0	0	0	0	0	0	0
Wt. Unit + 1g	+20	+39	20	-12	Gage	+2	+40	+20	-4	-5	-1	+52	-54
20	+237	+130	-27	-54	Out	+72	+184	+53	-138	-134	+8	+162	-172
40	+605	+237	-92	-135		+195	+438	+98	-121	-224	+27	+335	-329
60	+955	+333	-184	-240		+432	+728	+120	-233	-330	+44	+515	-531
80	+1220	+390	-230	-360		+970	+1150	+61	-411	-460	+50	+680	-680
100	+1520	+440	-380	-490		+510	+1740	+33	-660	-610	+30	+860	-800
115	+1730	+460	-470	-600		+580	+2150	-55	-1150	-740	0	+910	-880
0	+21	-50	-64	-90		-94	+657	-289	-685	-229	-69	+32	+75
115	+1430	+320	-430	-510		+560	+2260	-40	-1240	-910	-50	+1110	-730
130	+1640	+320	-520	-610		+700	+2490	-190	-1720	-1320	-160	+1370	-780
140	+1730	+320	-580	-690		+110	+3040	-430	-1910	-1620	-240	+1500	-770
145	+1830	+270	-600	-740		+720	+3190	-520	-2060	-1630	-340	+1700	-800
150	+1990	+230	-640	-840		+920	+3430	-640	-2430	-1770	-470	+1680	-740
0	+36	-195	-36	-260		-40	+1370	-930	-1740	-1900	-510	+500	+220
115	+4300	+520	-900				+2720	-630	-2070	-6200	-400	+1620	+430
150	+4250	+650	-1780				+3240	-510	-2230	-10960	-270	+930	-550
155	+4320	+650	-1840				+3390	-510	-2280	-11440	-470	+2050	-1250
160	+4510	+660	-1940				+3430	-490	-2330	-11400	-430	+2120	-1250
165	+4710	+680	-2030				+3570	-430	-2350	-11600	-450	+2190	-1300
170	+4890	+690	-2210				+3660	-460	-2400		-440	+2280	-1320
175	+5160	+700	-2330				+3770	-450	-2450		-420	+2370	-1350
0	+1640	+20	-980				+1390	-910	-1790		-730	+770	+180
175	+6050	+270	-2740					-410			-410	+930	-1400
180	+6090	+390	-2810					-390			-400	+950	-1400
185	+6300	+390	-2930					-390			-370	+950	-1450
190	+6520	+910	-3050					-370			-310	+960	-1470
195	+6760	+930	-3170					-370			-320	+950	-1490
200	+7030	+910	-3370					-340			-240	+960	-1530

+ denotes tension.
- denotes compression.

[redacted]

UNCLASSIFIED

[redacted]

Ref. Sym: 1612 (456)
Project No. TM-520

TABLE XXXIV

RECORDED STRAINS IN TEST NO. 14, SIMULATING CATAPULT CONDITION C 1.1 IN STATIC TEST OF TX-28 LUGS AND SWAY BRACES

Strain (Micro Inches/Inch)

Load Per Cent	Gage No. 1	2	3	4	5	6	7	8	9	10	11	12	25
0	0	0	0	0	0	0	0	0	0	0	0	0	0
Wt. Unit + 1g	+32	+25	-5	-9		+32	+47	-3	-7	+16	+12	+1	-33
20	-60	+36	-9	-127		+339	+378	-290	-120	-31	-67	+22	-9
40	-166	+14	-10	-236		+600	+716	-48	-250	-94	-154	+93	+29
60	-236	+21	+14	-304		+928	+1130	-90	-480	-240	-310	+220	+30
80	-530	-100	+70	-390		+1670	+1220	-240	-990	-430	-510	+430	+210
100	-680	-250	-360	-3160		+3670	+4320	-1650	-3350	-1710	-1550	+690	+460
115	-1140	-350	-470	-9880		+6400	+4930	-1960	-4140	-9780	-4240	+2690	+630
0	-140	+150	-160	-9250		+3960	+2050	-1780	-3070	-8930	-3460	+1510	0
115													
130	-1150	-470	-550	-11360		+6230	+7060	-2630	-6020	-8930	-4340	+3600	+630
140	-830	-450	-660	-12000		+6480	+7240	-2720	-6032	-11680	-5130	+3820	+680
145	-920	-480	-670	-12240		+6540	+7340	-2800	-6660	-12330	-5140	+3960	+730
150	-1000	-520	-680	-12330		+6660	+3560	-3060	-7340	-12500	-5380	+4180	+750
0	+20	+5	-290	-11060		+3402	+4760	-3030	-6000	-6200	-2220	+2280	-40
115	-1550	-540	-350										620
150	-2070	-970	-750										1170
155	-2190	-1040	-850										1230
160	-2350	-1440	-990										1700
165	-2460	-1360	-1150										1970
170	-2650	-1600	-1380										2210
175	-2820	-1820	-1700										2400
0	-1350	-1250	-1350										1370

+ denotes tension.
- denotes compression.

[redacted]

UNCLASSIFIED

TABLE XXXV

COMPUTED MAXIMUM AND MINIMUM COMPUTED STRESSES IN TEST NO. 13, SIMULATING FLIGHT CONDITION F 6.3 IN STATIC TEST OF TX-28 LUGS AND SWAY BRACES

Load	Rosette 1 Gages 1,2,3		Rosette 2 Gages 7,8,9		Rosette 3 Gages 10,11,12	
Per Cent	Su	Sv	Su	Sv	Su	Sv
0	0	0	0	0	0	0
Wt. Unit + 1g	2645	817	1284	274	1264	-961
20	9214	2040	5737	583	4332	-1821
40	19077	3129	13394	328	8821	-4016
60	29753	3621	22071	-644	13720	-5712
80	36893	2930	35168	-3180	17856	-8333
100	46579	2767	52404	-6521	22342	-11521
115	51660	1581	61414	-13128	22627	-15269
0	238	-2100	15961	-17173	373	-6736
115	45040	410	63985	-19833	27656	-18999
130	49516	-1036	80879	-30235	32099	-29935
140	51912	-2133	84669	-36622	33279	-38474
145	55355	-2113	88983	-40503	36636	-38368
150	60587	-2151	95292	-49842	38640	-42536
0	3044	-5208	31385	-47400	7314	-28956
0	-1072	-10615	Gage Out			
115	80987	-3072				
150	123624	-16708				
155	125320	-17971				
160	130672	-19428				
165	135828	-21987				
170	140455	-24449				
175	148354	-25855				
0	45039	-16471				
175	173636	-30360				
180	174088	-32111				
185	179924	-34052				
190	186032	-35831				
195	192838	-37442				
200	199858	-41432				

+ denotes tension.
- denotes compression.

TABLE XXXVI

COMPUTED MAXIMUM AND MINIMUM COMPUTED STRESSES IN TEST NO. 14, SIMULATING CATAPULT CONDITION C 1.1 IN STATIC TEST OF TX-28 LUGS AND SWAY BRACES

Load	Rosette 1 Gages 1,2,3		Rosette 2 Gages 7,8,9		Rosette 3 Gages 10,11,12	
Per Cent	Su	Sv	Su	Sv	Su	Sv
0	0	0	0	0	0	0
Wt. Unit + 1g	1232	-64	1676	56	557	179
20	219	-3206	16719	-5551	1356	-1746
40	-306	-7312	22852	-2681	4136	-4092
60	-652	-8958	36983	-6250	8203	-9069
80	-2486	-17425	53775	-17848	15240	-15240
100	-15339	-29679	121271	-79284	14203	-58354
115	-21823	-47001	133842	-99646	-10120	-296776
0	365	-13350	43212	-87363	-41197	-279984
130	-25732	-47854	188350	-143333	36155	-266868
140	-25600	-41061	199406	-142788	8951	-349177
145	-26670	-42155	208386	-157309	-11447	-374661
150	-28186	-44534	323426	46148	-69434	-472590
0	3800	-7800	Gage Out			
115	-2250	-5500				
150	-3800	-7500				
155	-5000	-7100				
160	-4800	-8600				
165	-5500	-9150				
170	-6500	-9950				
175	-9600	-10700				
0	-5200	-6000				

+ denotes tension.
- denotes compression.

TABLE XXXVII

DEFORMATION OF CASE IN TEST NO. 13, SIMULATING FLIGHT CONDITION F 6.3 IN STATIC TEST OF TX-28 LUGS AND SWAY BRACES

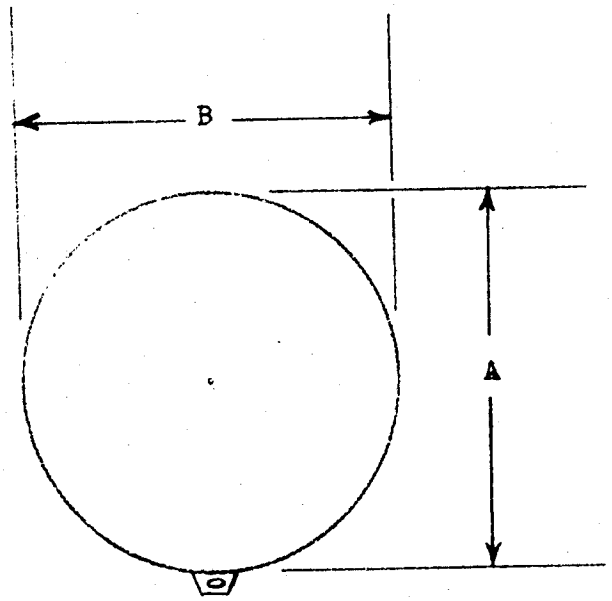

Distances Measured with a Micrometer

Load Per Cent	Deformation (Inches) Case Around Forward Lug A	B
0	.000	.000
115	.000	-.019
0	-.005	.000
150	.008	-.025
0	-.007	.000
175	.001	.019
0	.016	.004

[redacted]

UNCLASSIFIED

Ref. Sym: 1612 (456)
Project No. TM-520

TABLE XXXVIII

DEFORMATION OF CASE IN TEST NO. 14 SIMULATING CATAPULT CONDITION C 1.1 IN STATIC TEST OF TX-28 LUGS AND SWAY BRACES

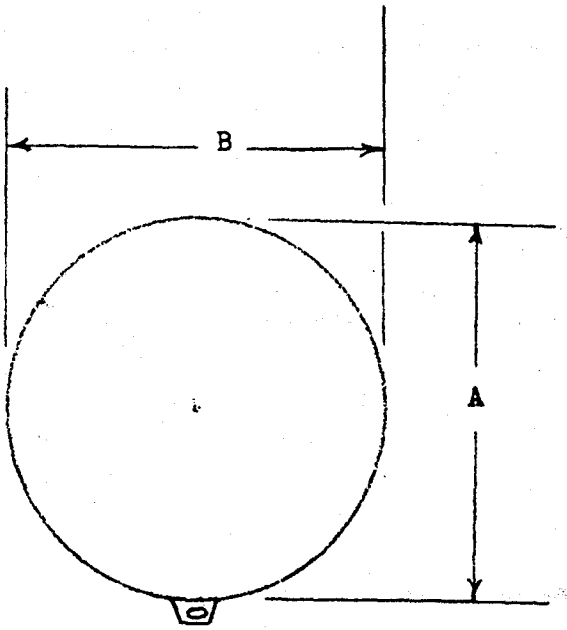

Distance Measured with a Micrometer

Load Per Cent	Deformation (Inches) Case Around Forward Lug A	B
0	.000	-.000
115	.007	-.021
0	.004	-.003
150	.008	-.016
0	.003	.000
175	.008	-.019
0	.005	+.004

UNCLASSIFIED

[redacted]

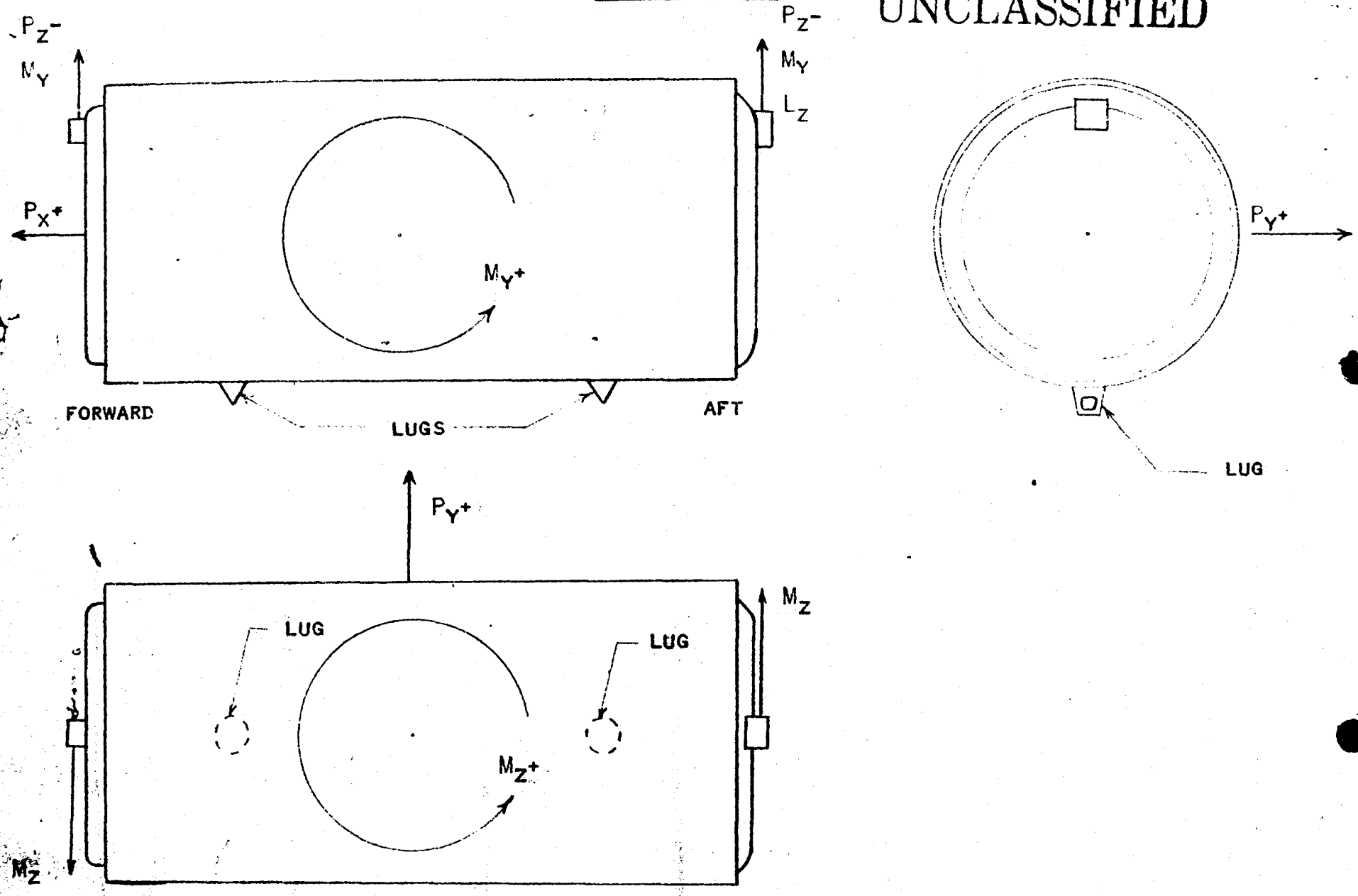

FIG. 1 -- LOAD LOCATIONS AND DIRECTIONS FOR LOADS APPLIED IN STATIC TEST OF TX-28 LUGS AND SWAY BRACES.

REF. SYM: 1612 (456)
PROJECT NO. TM-520

UNCLASSIFIED

[redacted]

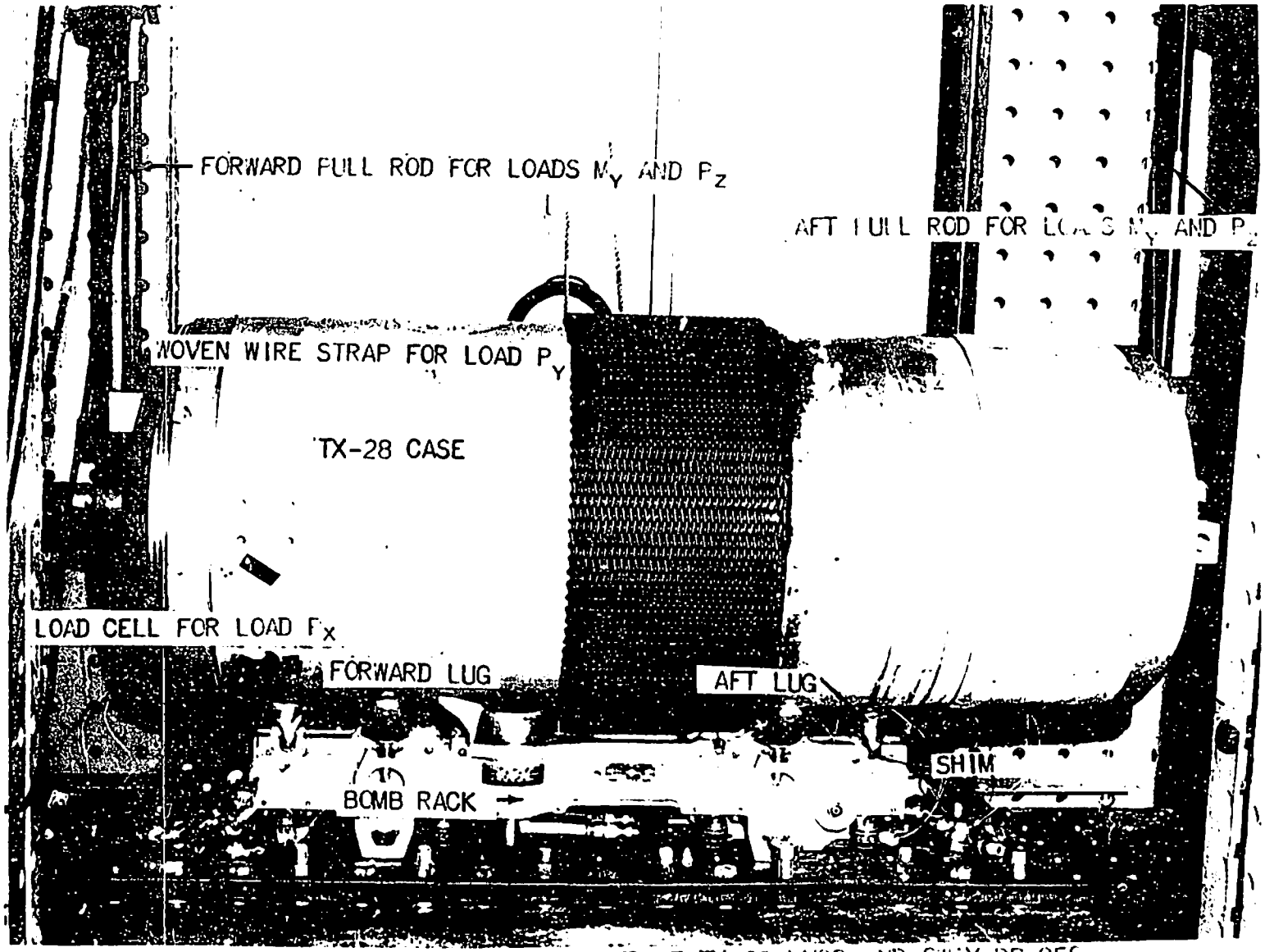

FIG. 2 -- TYPICAL TEST SETUP IN STATIC TEST OF TX-28 LUGS AND SWAY BRACES.

Date 101930

REF. SYM: 1612 (456)
PROJECT NO. TX-28

[redacted]

UNCLASSIFIED

#113

[redacted]

UNCLASSIFIED

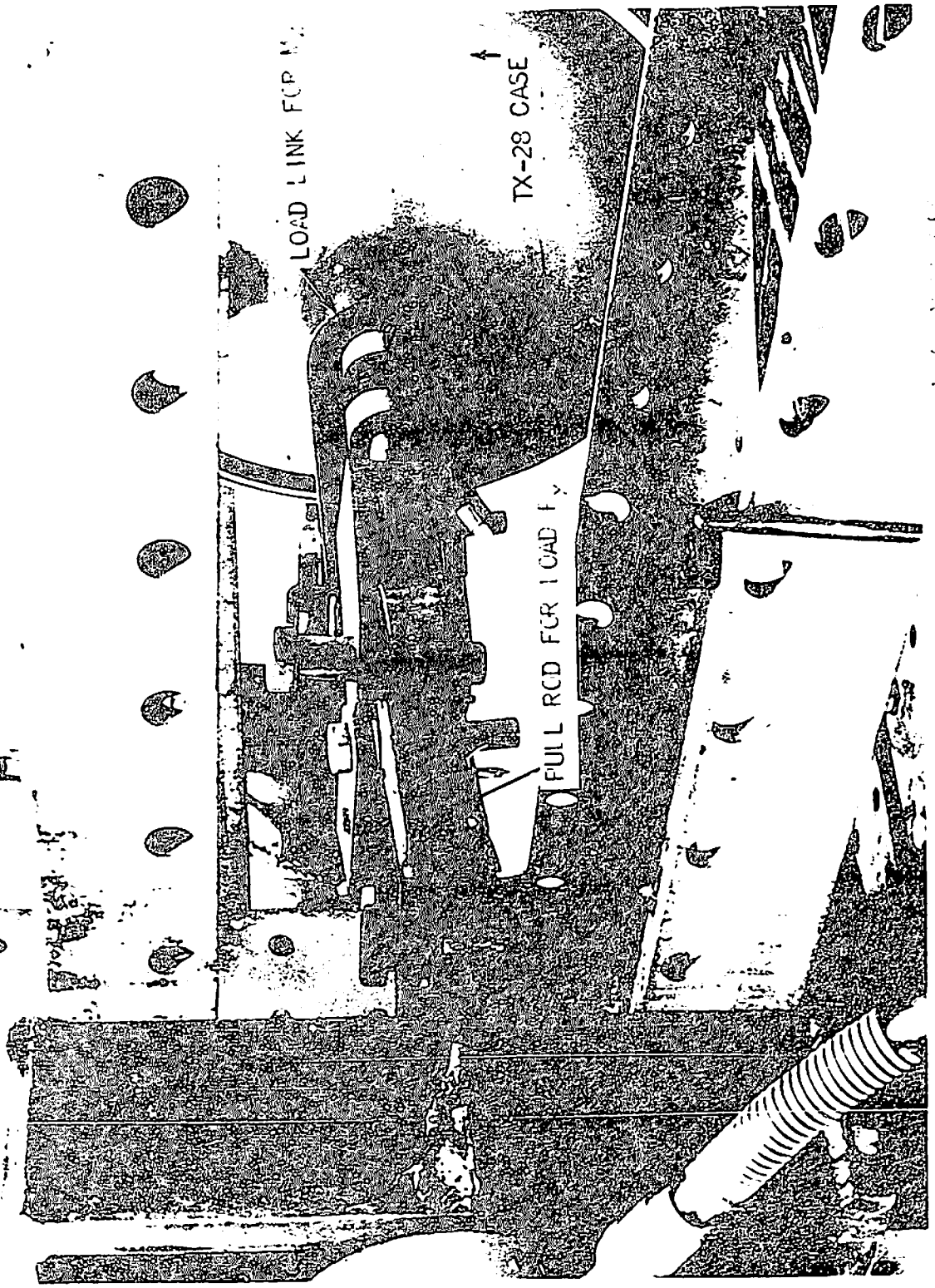

D4 161971

UNCLASSIFIED

[redacted]

UNCLASSIFIED

[redacted]

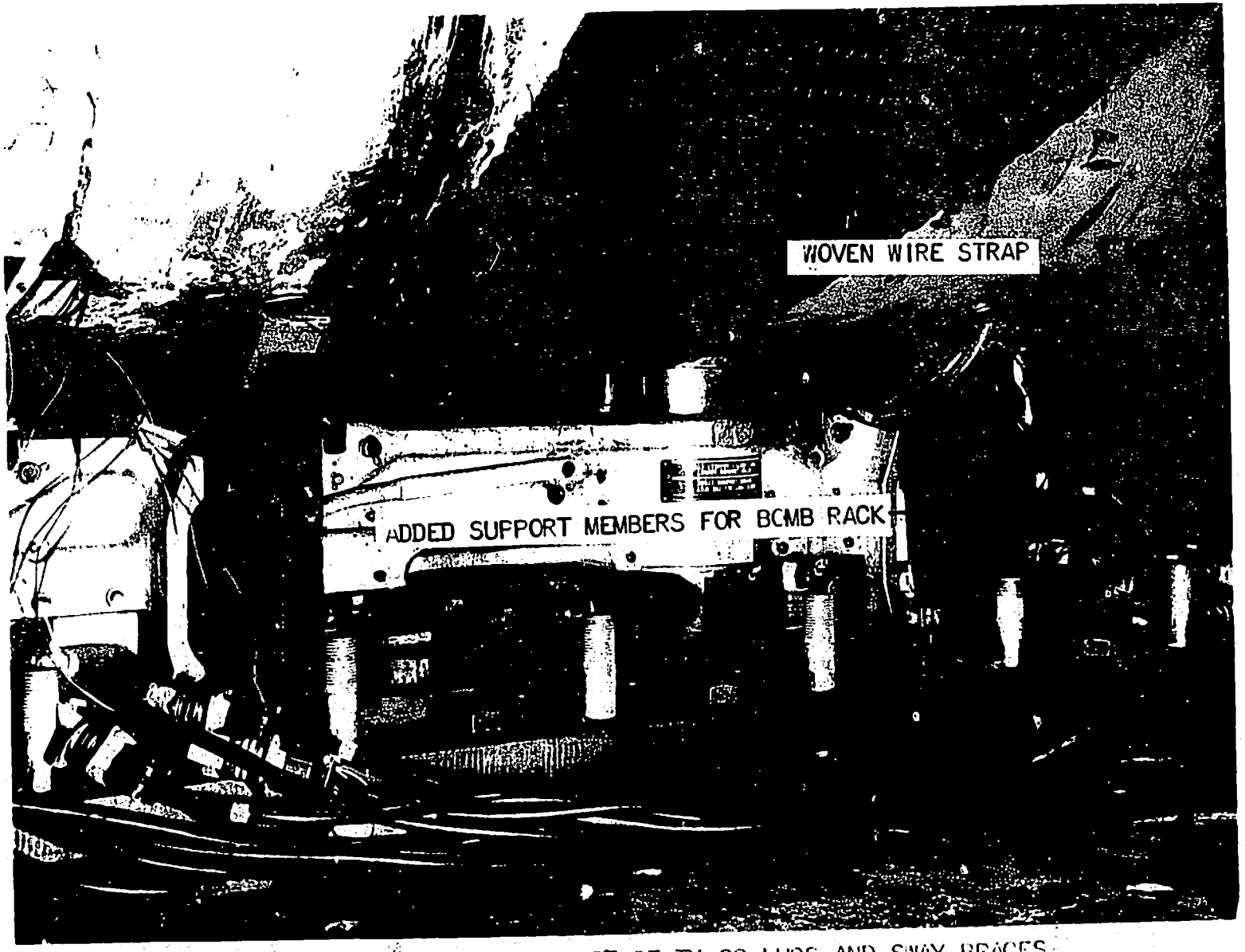

FIG. 4 -- TYPICAL TEST SETUP IN STATIC TEST OF TX-28 LUGS AND SWAY BRACES.

D#101932

REF. SYM: 1612 (4-56)
PROJECT NO. TM-520

[redacted]

UNCLASSIFIED

#715

UNCLASSIFIED

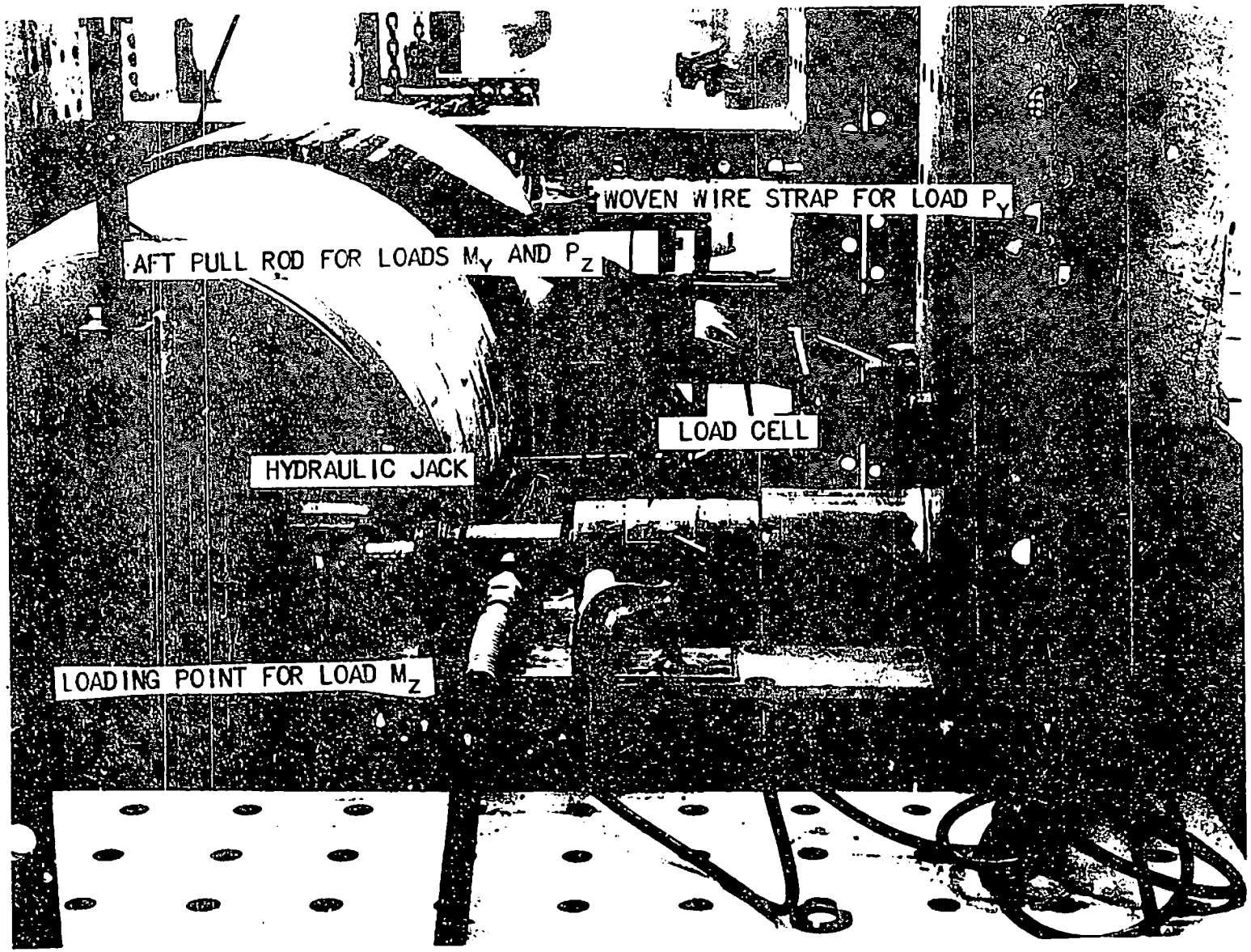

FIG. 5 -- TYPICAL TEST SETUP IN STATIC TEST OF TX-23 LUGS AND SWAY BRACES.

D# 101933

REF. SYM: 1612 (456)
PROJECT NO. TX-520

UNCLASSIFIED

#416

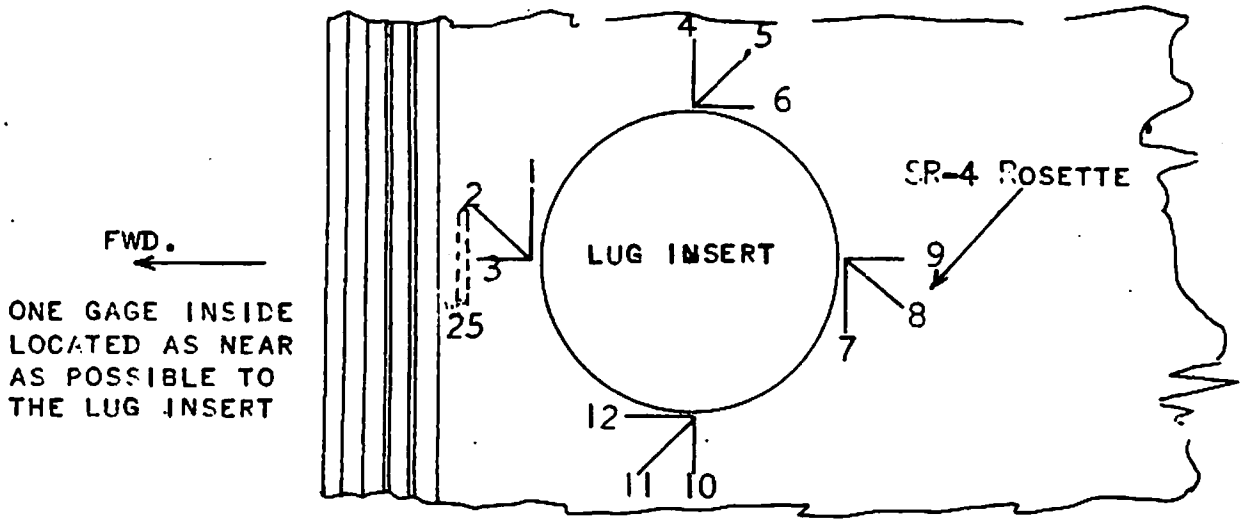

FWD. LUG, TOP VIEW

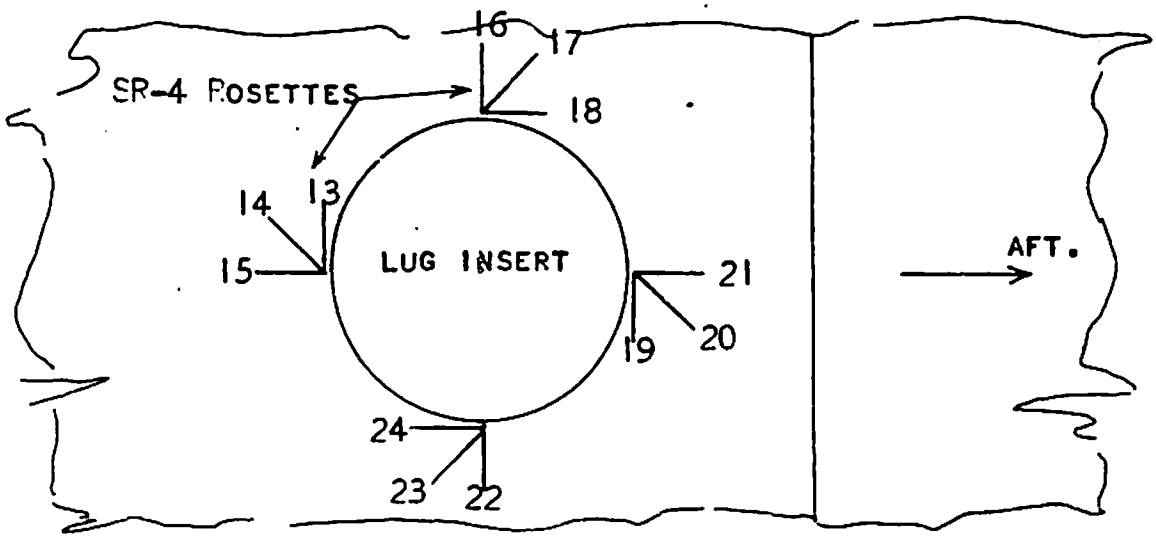

AFT. LUG, TOP VIEW

FIG. 6 -- STRAIN GAGE LOCATIONS IN STATIC TX-28 LUG AND SWAY SPACE TEST.

UNCLASSIFIED

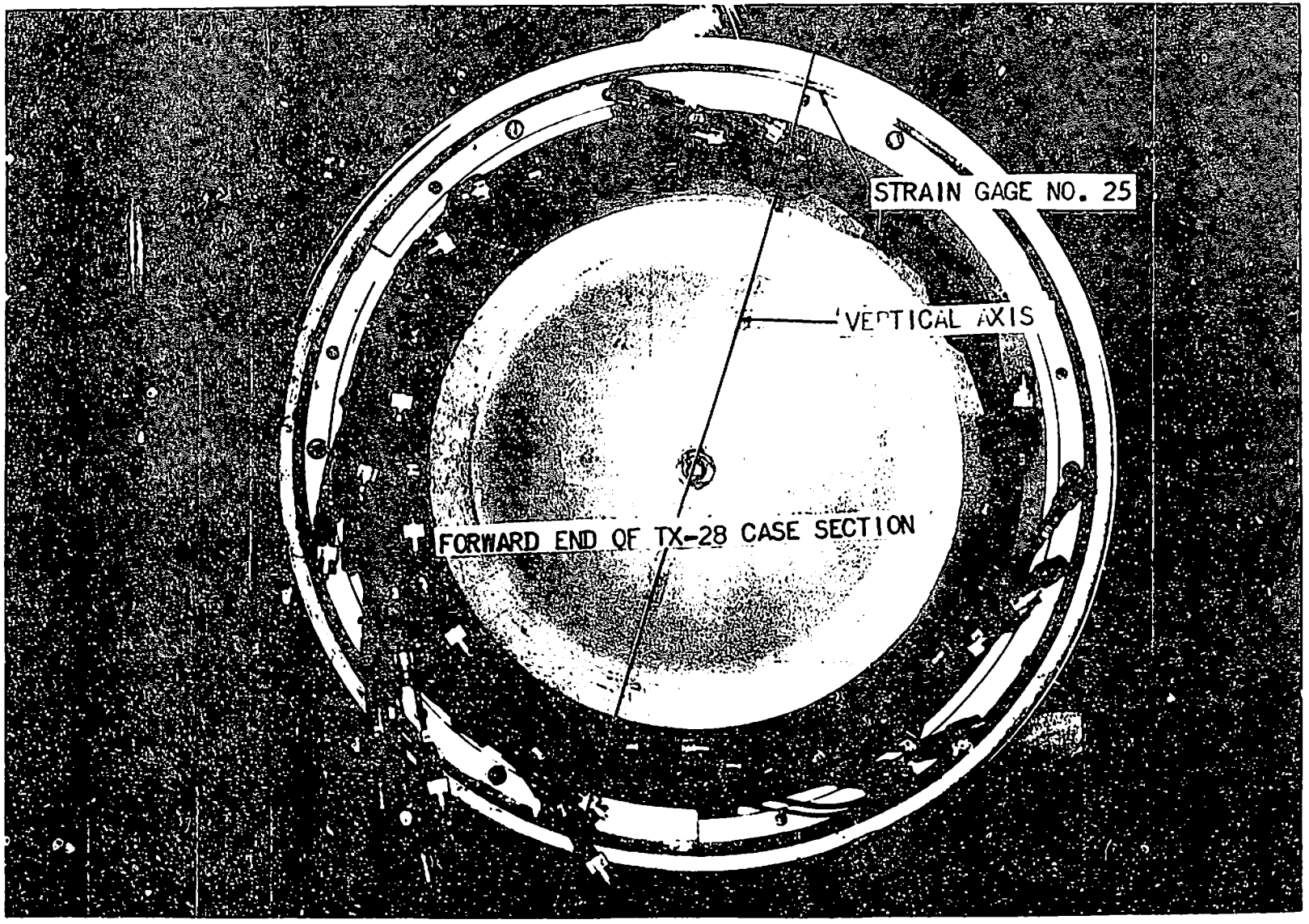

FIG. 7 -- LOCATION OF STRAIN GAGE NO. 25 IN STATIC TEST OF TX-28 LUG AND SLAY BRACES.

D# 1019 30

REF. SY: 1612 (160)
PROJECT NO. TX-28

UNCLASSIFIED

UNCLASSIFIED

#118

UNCLASSIFIED

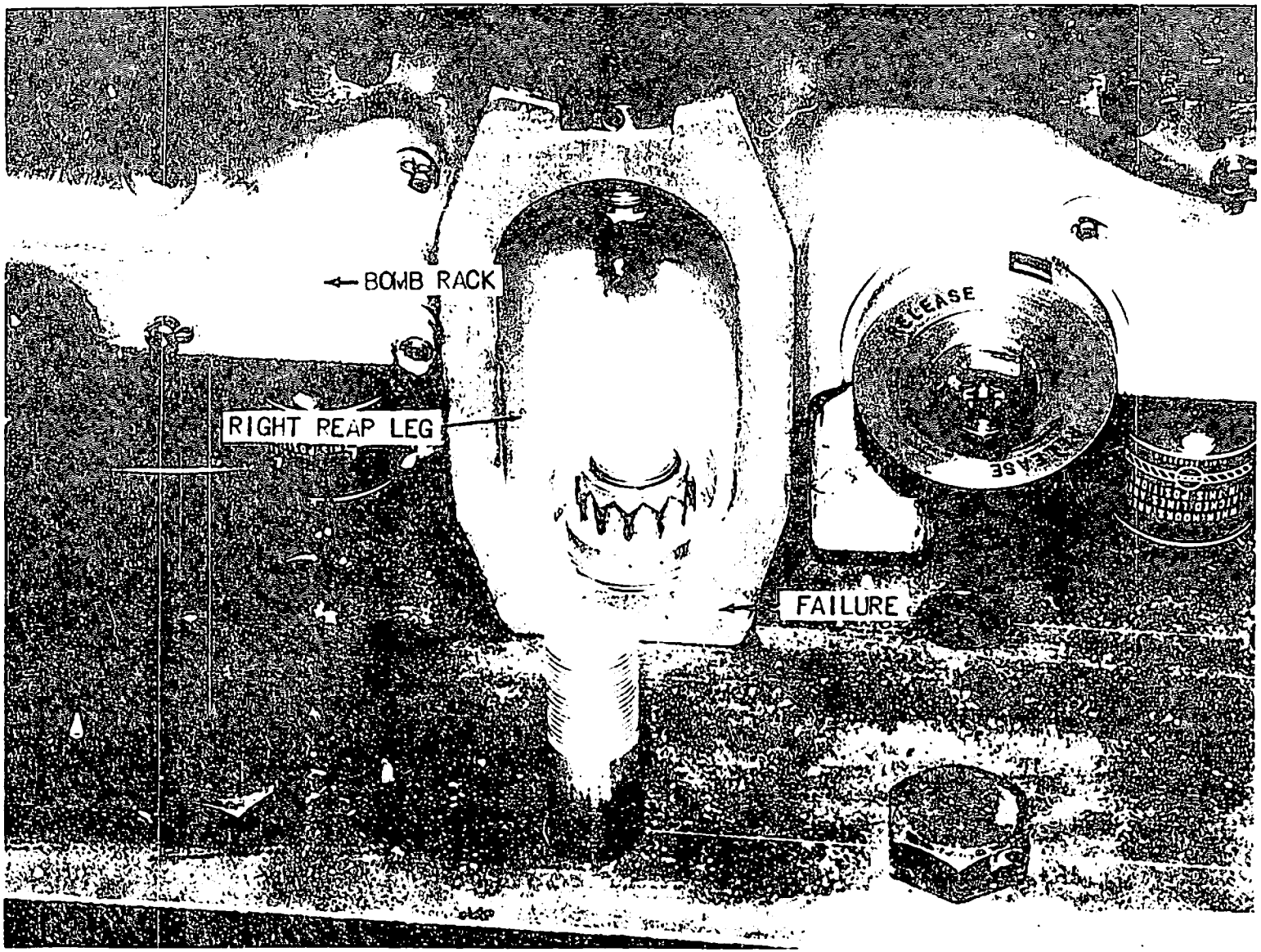

FIG. 8 -- BOMB RACK FAILURE IN STATIC TEST OF TX-28 LUG AND SWAY BRACES.

D# 101935

REF. SYS: [illegible]
PROJECT NO. TX-28

UNCLASSIFIED

#119

UNCLASSIFIED

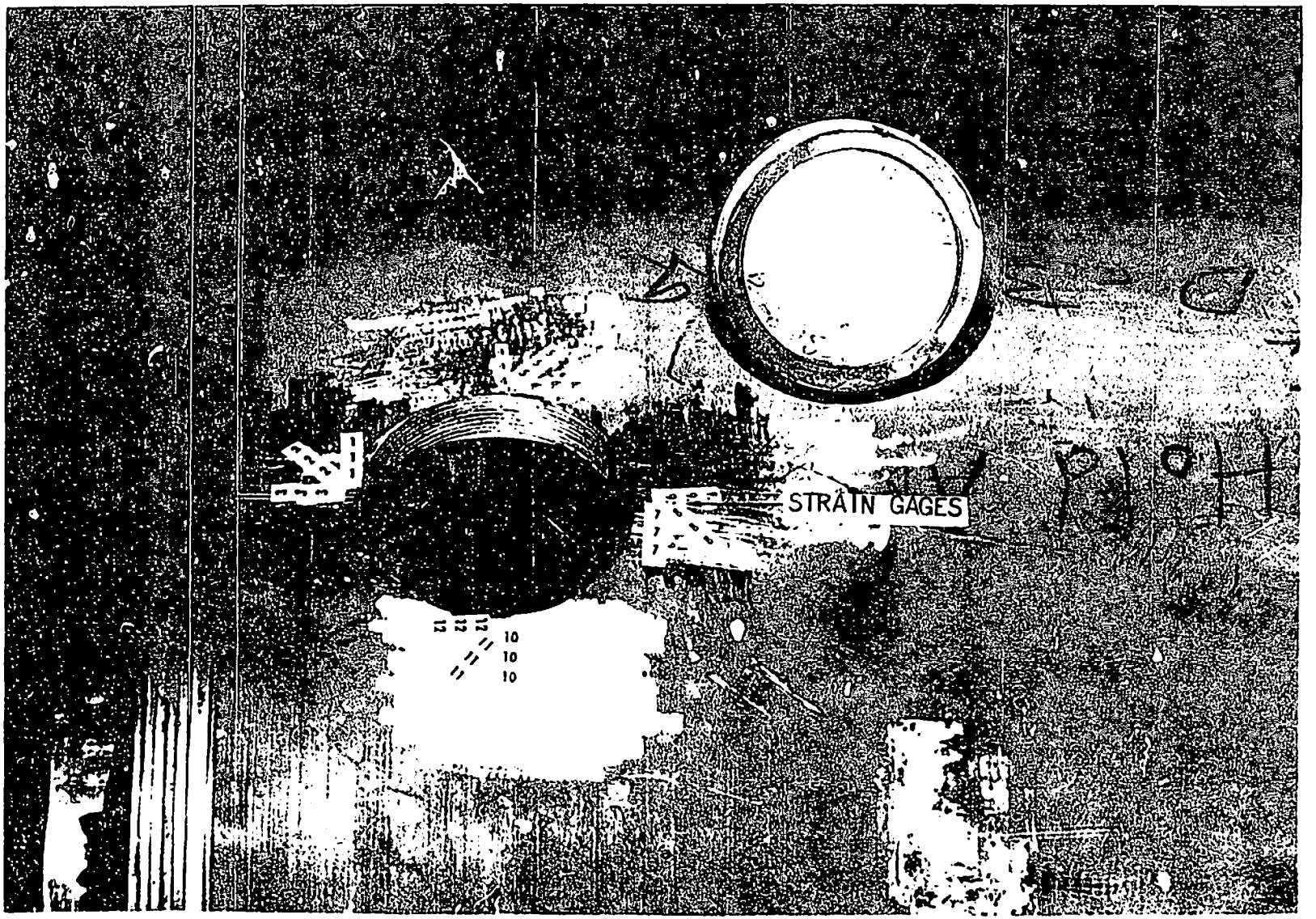

FIG. 9 -- FORWARD LUG FAILURE AND STRAIN GAGE LOCATIONS IN TEST NO. 9 IN STATIC TEST OF LUGS AND SWAY BRACE TEST.

D# 101936

REF. SYS: 1612 (AMC)
PROJECT NO. T-20

UNCLASSIFIED

#726

UNCLASSIFIED

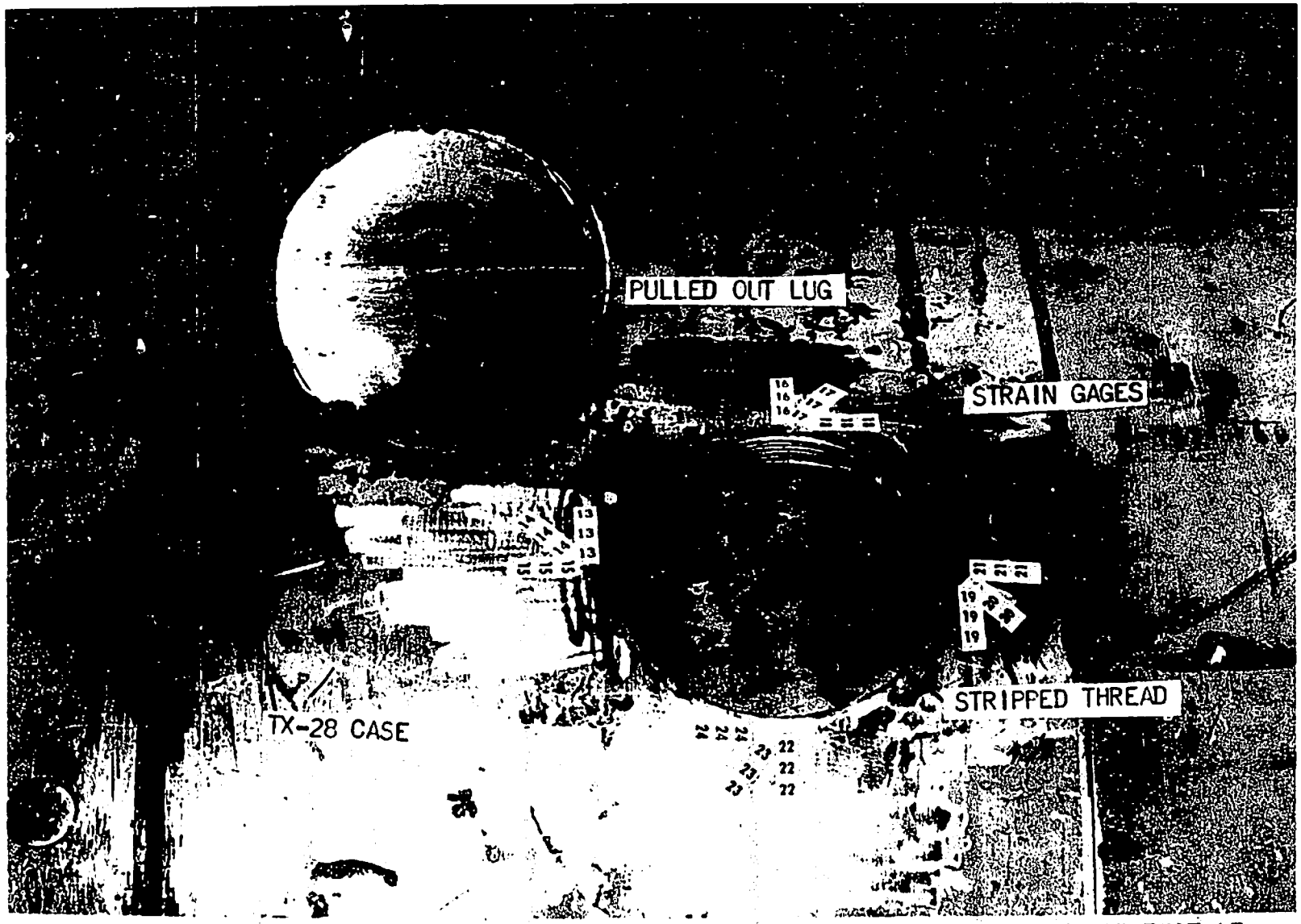

FIG. 10 -- AFT LUG FAILURE AND STRAIN GAGE LOCATIONS IN TEST NO. 10 IN STATIC TEST OF TX-28 LUGS AND SWAY BRACES.

D#101937

REF. SYM: 1612 (456)
PROJECT NO. TM-520

UNCLASSIFIED

#721