[redacted]

UNCLASSIFIED

SANDIA SYSTEMATIC DECLASSIFICATION REVIEW
1st Review Date: 7/14/98
Authority: ☐ ADC ☒ ADD
Name: W Layne
2nd Review Date: 7/23/98
Authority: ADD
Name: R.B. Craner
Determination (Circle Numbers)
1. Classification Retained
2. Classification Changed to U
3. Contains No DOE Classified Information
4. Coordinate With
5. Contains UCAN NV
6. Comments: OK for Opennet

JUL 13 1961
File No. TX-53, 3-2
T-17407
Project No. 13.858.00

TO: DISTRIBUTION

Re: Drop Tower Test of Full Scale Barrel Nose No. 2 (U)

Summary of Test

This test was conducted to evaluate the shock mitigating capabilities of the Barrel Nose configuration for the TX-53 unit.

The unit was impacted on a horizontal concrete surface at a vertical velocity of 62'/sec and a horizontal velocity of 51.3'/sec with the longitudinal axis of the unit oriented 90° from horizontal. The full scale Barrel Nose was made of a forward nose section 0.6" thick of 6061 AL. This section was aluminum welded to an aft section of 0.6" 3003 AL. The maximum faired longitudinal acceleration measured in the unit was 119 g in the longitudinal direction on the aft weight with a pulse duration of 51.9 milliseconds.

The Barrel Nose bottomed out on the case of the test unit during impact causing the maximum accelerations to go much higher than was desired.

Object of Test

The test was conducted to evaluate the shock mitigating capabilities of the Barrel Nose for the TX-53 during simulated laydown delivery.

Authorization for Test

This test was requested in a Work Order Authorization, from E. I. Bruce, 7117, to E. H. Copeland, 7321, dated 11-26-60. The test was assigned to P. H. Adams, 7323, to be conducted on the 185' drop tower. The consultant was Don Baker, 7117.

Summary of Past Tests

One prior drop test, T-17374, has been made on this dummy TX-53 unit with Barrel Nose configuration.

Setup for Test

Figure 1 shows the unit hung on the 185' drop tower. Figure 2 shows the location, and direction of the positive accelerations, of each accelerometer in the unit.

SANDIA SYSTEMATIC DECLASSIFICATION REVIEW
DOWNGRADING OR DECLASSIFICATION STAMP
CLASSIFICATION CHANGED TO: U
AUTHORITY: R.B. Craner
Emelda Selph 7/30/98
PERSON CHANGING MARKING & DATE
RECORD ID: 98SN2991
W C Layne 7/30/98
PERSON VERIFYING MARKING & DATE
DATED: 7/23/98

CENT...
ACCOUNT ...
CASE
FILE No. TX-53
3-2

[redacted]

UNCLASSIFIED

UNCLASSIFIED

The waveforms and pulse durations of the impact shocks may be seen on the oscillograph record (Figure 5).

The movie coverage used on this drop showed the pitch and velocities at impact (Figure 6). The movie film data reduction showed the unit was +10.92 degrees off vertical, afterbody leading at impact.

The horizontal component of velocity at impact was 50.0 ft/sec and the vertical component at the nose end was 63.75 ft/sec as determined from the photographic coverage.

J. N. Stoever

J. N. STOEVER - 7323-3

Dale Buchanan

7321 Project Engineer: D. BUCHANAN - 7321-5

Approved by: R. S. HOOPER - 7321-5

JNS:7323-3:dc

Encs: Tables I-II
Figs. 1-6

Distribution:
E. I. Bruce, 7117
D. M. Bruce, 7182
J. M. Wiesen, 1442
D. S. Bliss, 2344
E. H. Copeland, 7321
J. R. Harrison, 7523
R. K. Smeltzer, 3421-3

UNCLASSIFIED

The drawing of the Barrel Type Nose is M-10603; outer panels, 158661; afterbody, 158674; wedges, 158662. The inner ballistic steel cylinder has no drawing number.

The test equipment used was six Kistel amplifiers Model 111 BF mounted in tower instrumentation panel, one 14 channel C.E.C. Datatape Recorder Type 5-752-A, Serial No. T-01465. The accelerometer signals were recorded on a C.E.C. FM tape recorder. The tape was played back on an Ampex FM tape recorder Model 114-A through Ampex 625 cps low pass output data filters and recorded on a C.E.C. Model 5-119 oscillograph.

Table I lists the specifications of the instruments used in the test vehicle.

Procedure

The unit was instrumented with Statham accelerometers as shown in Figure 2. The unit was thenhung on the 185' drop tower carriage as shown in Figure 1. The 0° side of the unit was facing the barricade at impact. The instrument cables were attached to the accelerometer loads and then the instrument cables were attached to the carriage boom.

Three loops were made in the instrument cables to allow slack when the unit was released from the carriage. The unit was raised on the tower by means of the dynamic carriage attached to the haul block. The haul block was attached to the dynamic carriage by a 3/8" aircraft cable loop containing two guillotine cutters. A signal from the tower control building fired the guillotine cutters on the haul block cutter loop allowing the carriage to slide down the tower work cable. When it reached the desired horizontal component of velocity the test unit was released from the dynamic carriage by guillotine cutters cutting the unit free at points shown on Figure 1.

Results

The Barrel Nose bottomed out on the case of the test vehicle upon impact on the concrete target and a 119 g longitudinal acceleration was measured on the aft weights.

The unit slid about 8' on its nose then slapped down on its side, at which time the afterbody came off (Figure 3). Figure 4 shows closeup of the bottomed out Barrel Nose.

The maximum faired longitudinal accelerations were 119 g on the aft weights and 101 g on the steel case at impact. The slapdown accelerations had longitudinal faired pulse of 127 g and 133 milliseconds. The vertical faired pulse was 225 g and 43 milliseconds. The acceleration cables were torn loose on slapdown which may have caused erroneous acceleration readings. These values and the other accelerations are listed in Table II.

UNCLASSIFIED [redacted] #1090

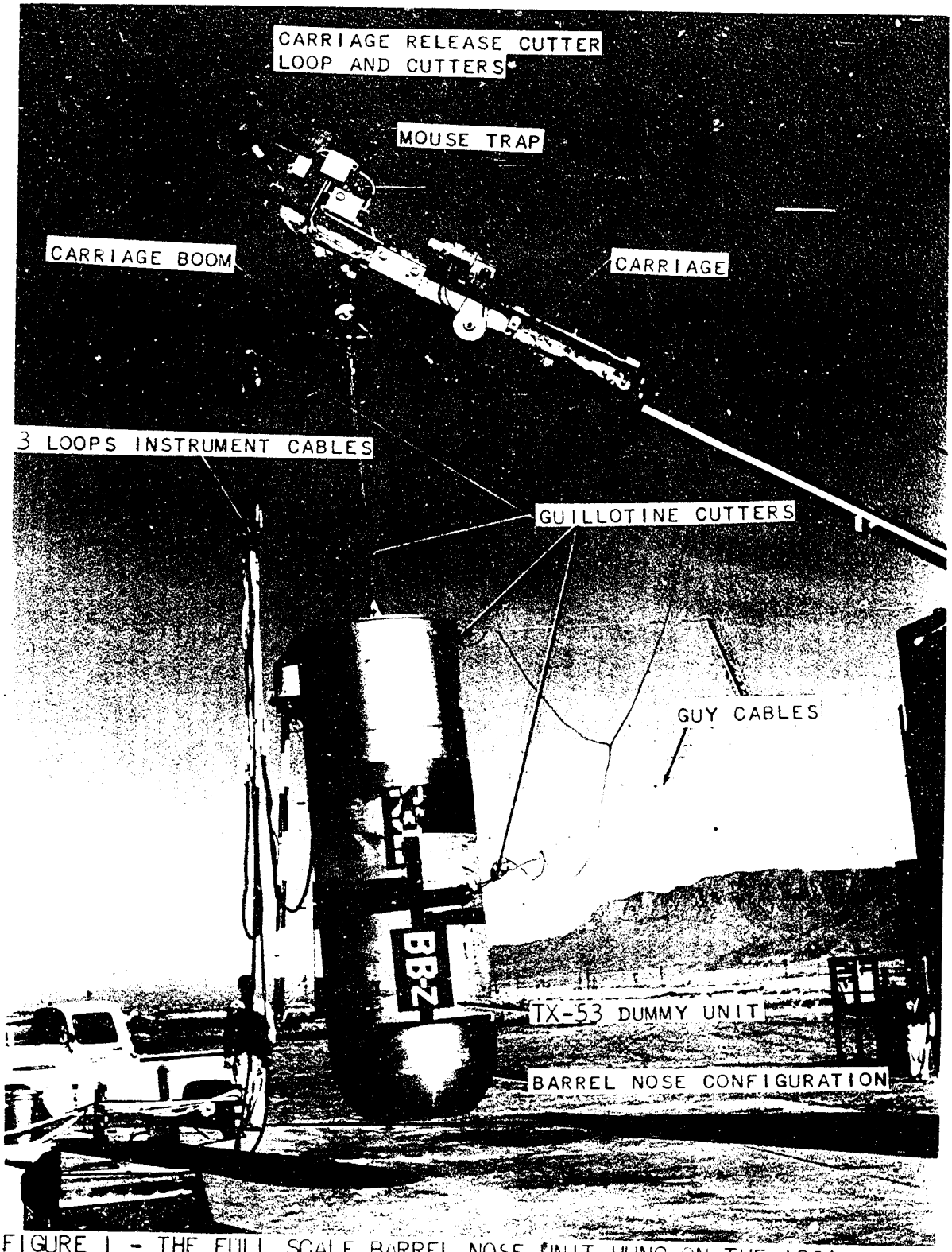

FIGURE 1 - THE FULL SCALE BARREL NOSE UNIT HUNG ON THE 185' CARRIAGE (V_V = 62'/SEC, V_H = 51.3'/SEC) -- DROP TOWER TEST OF THE FULL SCALE BARREL NOSE NO. 2

D#61-8701 PROJECT NO. T-17407

[redacted]

UNCLASSIFIED

[redacted]

NOTE: ARROWS INDICATE POSITIVE ACCELERATIONS

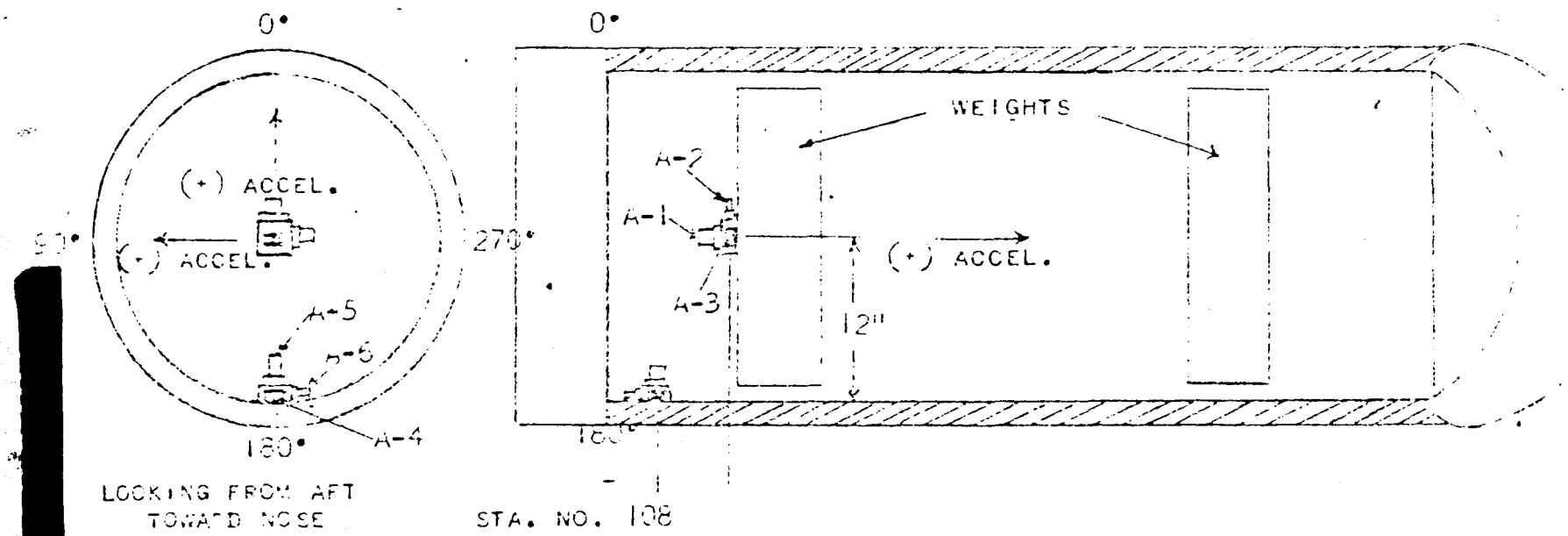

[redacted]

FIGURE 2 - SKETCH SHOWING LOCATION OF ACCELEROMETERS AND DIRECTION OF POSITIVE ACCELERATIONS ON FULL SCALE BARREL NOSE NO. 2 -- DROP TOWER TEST OF THE FULL SCALE BARREL NOSE NO. 2

PROJECT NO. T-174[illegible]

UNCLASSIFIED

[redacted]

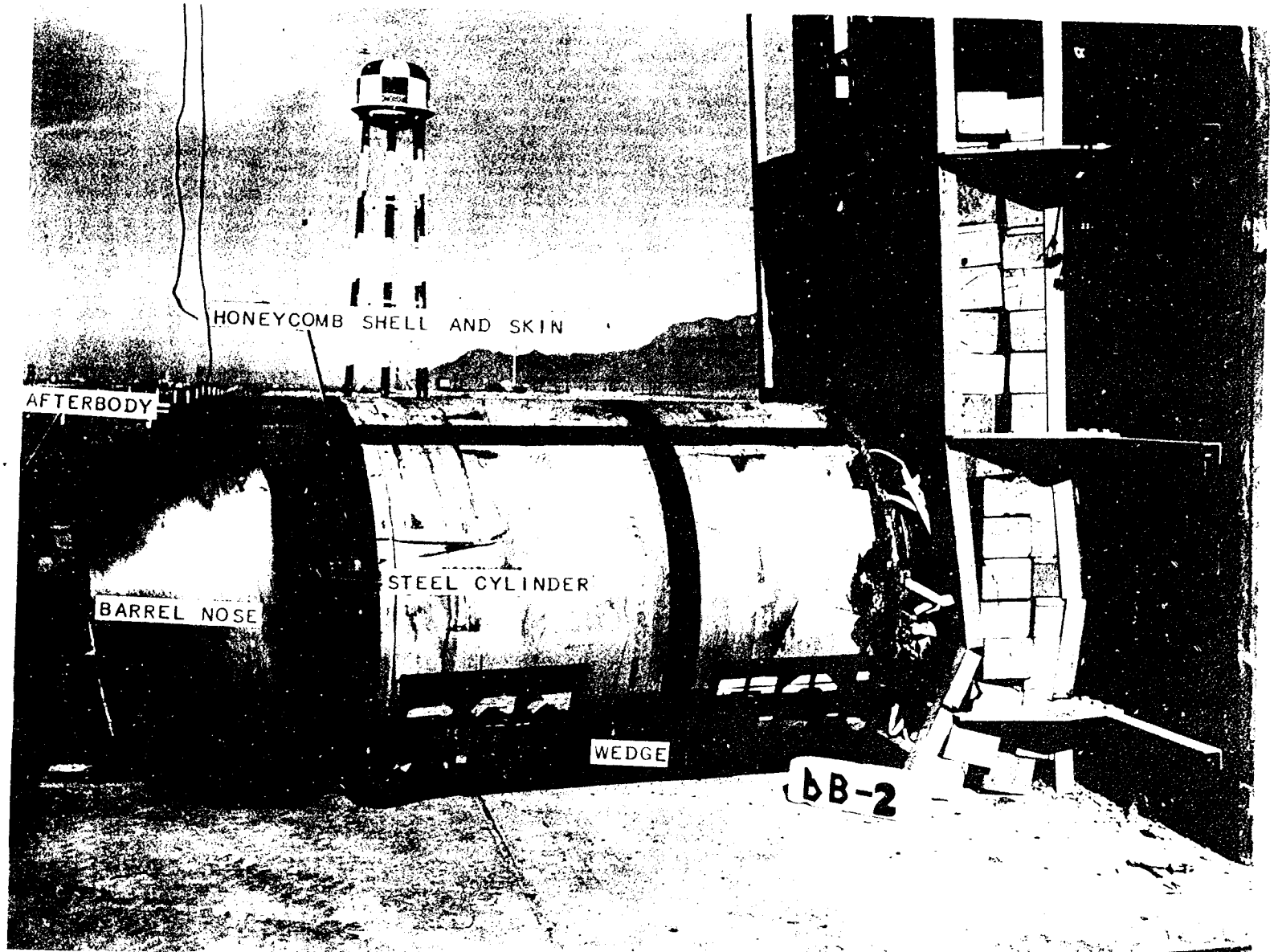

FIGURE 3 - THE FULL SCALE BARREL NOSE AFTER IMPACTS -- DROP TOWER TEST OF THE FULL SCALE BARREL NOSE NO. 2

D#61-8702

PROJECT NO. T-17407

#1054

[redacted]

UNCLASSIFIED

UNCLASSIFIED

FIGURE 4 - THE BARREL NOSE CONFIGURATION DAMAGE AFTER FULL SCALE BARREL TEST NO. 2
-- DROP TOWER TEST OF THE FULL SCALE BARREL NOSE NO. 2

D# 61-8703

PROJECT NO. T-17407

#10693

UNCLASSIFIED

UNCLASSIFIED

[redacted]

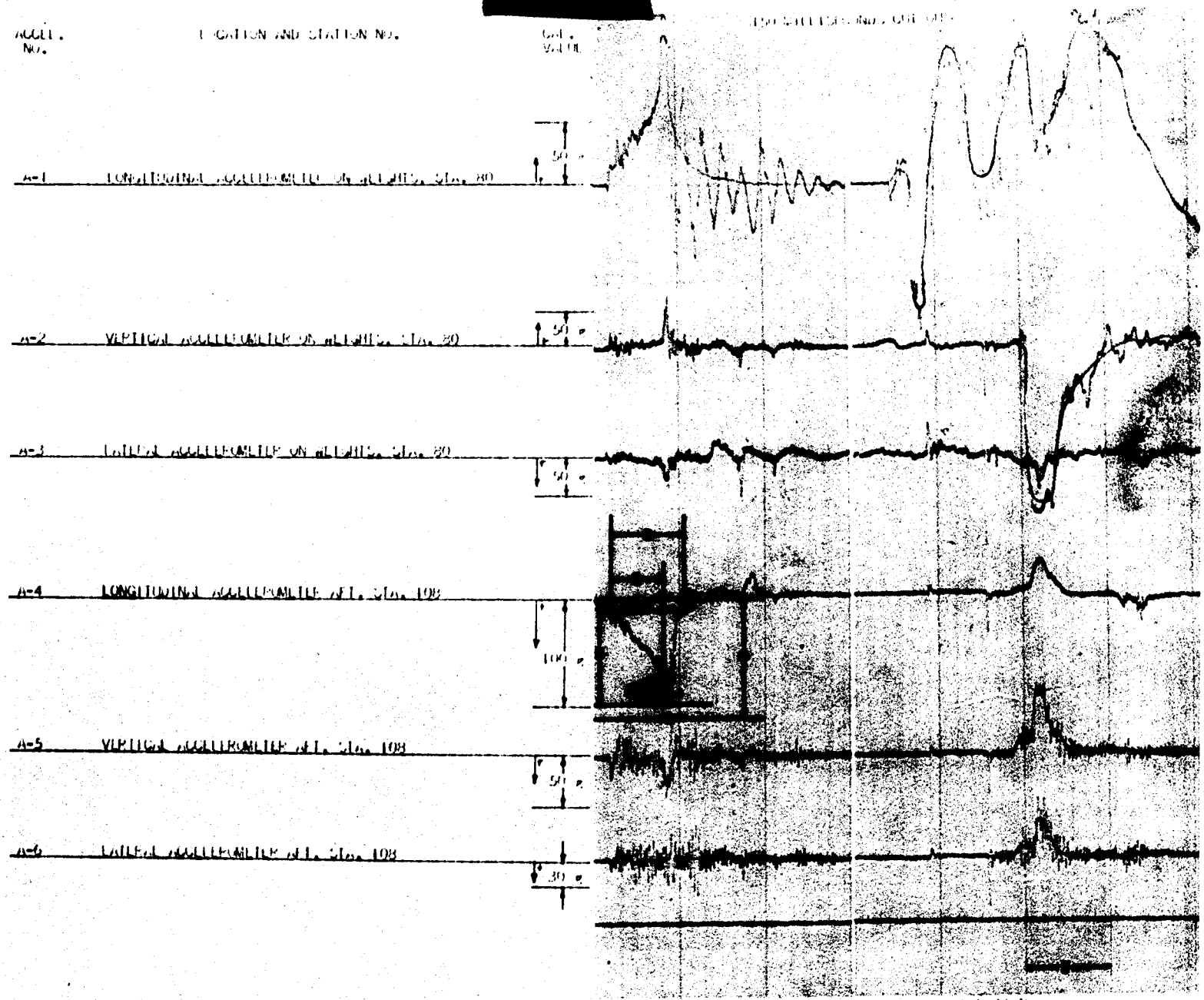

[redacted]

FIGURE 5 - TYPICAL OSCILLOGRAPH RECORD OF FULL SCALE BARREL TEST NO. 2 -- DROP TOWER TEST OF THE FULL SCALE BARREL NO. 2

PROJECT NO. T-17407

UNCLASSIFIED

[redacted]

UNCLASSIFIED

BB-2 TOWER DROP

SIDE VIEW 35MM APPROXIMATELY 129 FRAMES PER SECOND

AT IMPACT:

PITCH = +10.92 DEGREES
X_A VELOCITY = 50.00 FT./SEC.
X_B VELOCITY = 50.00 FT./SEC.
Y_A VELOCITY = 63.75 FT./SEC.
Y_B VELOCITY = 61.25 FT./SEC.

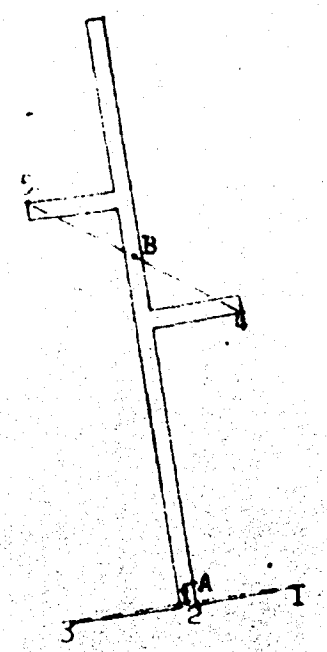

FIGURE 6. - IMPACT ATTITUDE AND VELOCITIES AT IMPACT OF THE FULL SCALE BARREL TEST NO. 2 -- DROP TOWER TEST OF THE FULL SCALE BARREL NOSE NO. 2

PROJECT NO. T-17407

UNCLASSIFIED

[redacted]

[redacted]

T-17407

UNCLASSIFIED

TABLE I

Table of Accelerations Used on the Drop Test
of Full Scale Barrel Nose No. 2

Drop Tower Test of Full Scale Barrel Nose No. 2

Accel. No.	Accel. Serial No.	Direction Sensitive Axis	Statham Accel. Type	Range ± g	Natural Frequency C.P.S.
A-1	1686	Long.	A5A - 100 - 335	100	670
A-2	3997	Vert.	A5A - 500 - 350	500	>1500
A-3	7168	Lat.	A5A - 1000 - 350	1000	>1500
A-4	615	Long.	A5A - 100 - 300	100	750
A-5	634	Vert.	A5A - 100 - 300	100	810
A-6	1665	Lat.	A5A - 200 - 335	200	1120

UNCLASSIFIED

[redacted]

TABLE II

TABLE OF ACCELERATIONS ON FULL SCALE BARREL TEST

DROP TOWER TEST ON FULL SCALE BARREL TEST NO. 2

Inst. No	Location	Direction	Drop Test of Barrel Nose on Flat Concrete Target. V_V = 62'/sec. V_H = 51.3'/sec. (Initial Impact) Acceleration (g or Rad/sec²) Max +	Max −	Faired	Time (ms) Rise	Pulse	Slapdown Pulse Readings on Concrete. V_V = 62'/sec. V_H = 51.3'/sec. Acceleration (g or Rad/sec²) Max +	Max −	Faired	Time (ms) Rise	Full
A-1	On Weights Sta. 80	Longitudinal	138.0	68.4	+119.0	30.5	51.9	139.0	119.0	+127.0	86.2	132
A-2	On Weights Sta. 80	Vertical	78.0	27.8	+ 61.2	32.8	42.3	267.0	246.0	-225.0	1.0	43
A-3	On Weights Sta. 80	Lateral	48.0	18.7	+ 24.3	19.2	26.2	42.1	14.7	- 29.5	16.8	31
A-4	Aft Steel Case Sta. 108	Longitudinal	114.0	24.9	+101.0	30.7	42.2	28.1	32.7	- 30.0	11.5	25
A-5	Aft Steel Case Sta. 108	Vertical	41.0	32.9	+ 25.4	18.7	22.9	12.8	69.3	- 60.9	12.8	29.[illegible]
A-6	Aft Steel Case Sta. 108	Lateral	37.9	39.5	------	----	----	19.5	66.1	- 41.2	13.6	25.8

All accelerations were measured with a seismic type accelerometer with 0.6 damping.

All accelerations were read according to SCS-10, Para. 7.4 to 7.4.5.

UNCLASSIFIED

UNCLASSIFIED