[redacted]

1120

UNCLASSIFIED

SANDIA SYSTEMATIC DECLASSIFICATION REVIEW

1st Review Date: 7/20/98	Determination (Circle Numbers):
Authority: ☐ADC ☒ADD	1. Classification Retained
Name: W Layne	2. Classification Changed to: U
	3. Contains No DOE Classified Information
2nd Review Date: 7/23/98	4. Coordinate With:
Authority: ADD	5. Contains UCAI? No
Name: RB Craner	6. Comments: OK for Apennet

RECEIVED

DEC 27 1961

File No: TX-53, 3-2
T-17452
Date Completed: 12-21-60

DEC 28 1961

MR. E. I. BRUCE - 7117
Attn: R. D. Grover CENTRAL RECORD FILE

Re: Drop tests on Full Scale Honeycomb Nose (Dwg. 163272)

Summary of Test

Three drop tests simulating laydown conditions were made on a dummy TX-53 with a new honeycomb nose design (70g nose).

Drop No. 1 was made with impact velocity components of 58 FPS vertical and 51 FPS horizontal, simulating parachute retarded fall with a 35 MPH wind. The energy absorbing characteristics of this new design were not adequate to limit the faired accelerations on the longitudinal axis of the unit to 70g. The record showed maximum faired accelerations of 83.6g on the longitudinal axis of the forward plate at station 21, and 86.8g on the same axis of the aft plate at station 114.

Two drops were made with respective impact velocities of 40 FPS vertical and 30 FPS vertical. Both of these tests were made with the longitudinal axis of the weapon horizontal, and were dropped vertically on the honeycomb side panel and the wedge, respectively. The faired amplitude of the resultant acceleration vector computed from the record of test No. 2 showed 119g on the forward plate (station 21) and 130g on the aft plate (station 114). No record of the accelerations was obtained for Drop No. 3.

No apparent damage to the steel cyclinder of the unit occurred during the three drops.

Object of Test

The primary object of the test was to evaluate the energy absorbing characteristics of a new honeycomb nose design. (70g nose) Dwg. 163272.

UNCLASSIFIED

SANDIA SYSTEMATIC DECLASSIFICATION REVIEW
DOWNGRADING OR DECLASSIFICATION STAMP

CLASSIFICATION CHANGED TO: U	AUTHORITY: R. B. Craner
Emelda Selph 7/30/98	RECORD ID: 98SW3072
PERSON CHANGING MARKING & DATE	
W. C. Layne 7/30/98	DATED: 7/23/98
PERSON VERIFYING MARKING & DATE	

CENTRAL RECORD FILE

ACCOUNTABILITY CARD	LH
FILE No. TX-53	3
	3-2

[redacted]

The secondary object was to study the effect of vertical drops on the side panel, Dwg. 158661 and the wedge, Dwg. 158662.

Authorization for Test

The test was requested in a Work Order Authorization from E. I. Bruce, 7117 to E. H. Copeland, 7321, dated December 14, 1960. R. D. Grover, 7117, was the consultant.

Setup for Test

Figure 1 shows the unit for the first drop suspended from the carriage of the 185 foot Drop Tower. This simulated TX-53 is held about 4° from the vertical by guy cables to prevent pendulum action of the unit before it is released from the carriage.

A list of components of which the object tested was made follows:

1. 70g nose Dwg. 163272
2. Side panels Dwg. 158661
3. Wedges Dwg. 158662
4. Inner steel cylinder No Dwg. number
5. Tail section Dwg. 158674

Figure 2 is a drawing showing the suspension and orientation of the test object for drops No. 2 and 3. These drops were also made from the carriage of the 185 foot tower. The nose (Dwg. 163272) was removed from the unit for drops No. 2 and 3 to test the side panel (Dwg. 158661) and the wedge (Dwg. 158662).

A list of the test equipment used for all three drops follows:

1. C.E.C. tape recorder, model 50752A, Ser. No. T-01465
2. Kintel amplifiers, model 111 BF, Sandia property Nos. 99047, 99048, 99049, 99054, 99363 and 99375.
3. Ampex tape recorder, model 114-A, Serial No. 1051
4. C.E.C. oscillograph, Type 5-119-R, Serial No. 11016

The test unit was instrumented with six Statham accelerometers, Type A-5A. They are listed and identified in Table I, and their locations and orientation are illustrated in Figure 3.

Procedure

Three drops were made in this series. The first drop was made from a height of 102 ft. with a slide distance of 116 ft., computed to produce impact velocity components of 58 FPS vertical and 51 FPS horizontal. The last two were vertical drops from heights of 24.9 ft. and 14ft. respectively, computed to produce impact velocities of 40 FPS and 30 FPS.

The simulated TX-53 was instrumented with six Statham accelerometers, type A5A as shown in Figure 3, and suspended from the carriage of the 185 ft. tower for the first test as shown in Figure 1. Figure 2 illustrates the suspension and orientation of the same unit without the nose as used in the 2nd and 3rd drops.

After the carriage had been checked out mechanically and electrically, the instrumentation in the unit was connected through cables to the recording equipment and checked out completely for good operation. The tape recorder was then calibrated and made ready for the test. The remainder of the preparations and the drops were performed in accordance with the Tower Operating Procedure. All acceleration data were recorded on a C.E.C. tape recorder, and re-recorded on a C.E.C. oscillograph for a permanent record of each drop.

Results

The record indicates that this nose design did not limit the maximum faired acceleration to 70g when impacted nose first onto concrete with velocity components of 51 FPS horizontal and 58 FPS vertical (Drop No. 1). The maximum faired accelerations recorded were 83.6g longitudinal on the forward plate (station 21) and 86.8g longitudinal on the aft plate (station 114). The acceleration signatures for Drop No. 1 are shown in Figure 4 and pertinent acceleration data are listed in Table II. All acceleration signatures were read according to SC-4452(M), section D, paragraph 2.1.1 dated January, 1961. The new honeycomb nose (70g Dwg. 163272) was crushed as shown in Figures 5 and 6.

Test No. 2 was a vertical drop on the honeycomb side panel (Dwg. 158661). This unit was dropped vertically with a computed impact velocity of 40 FPS, impacting at 135° as referenced in Figure 2. The crushed side panel (Dwg. 158661) can be seen in Figure 7. The accelerometers used in drop No. 2 were mounted at 0° and 270° on the test object which impacted at 135°F as referenced in Figure 2. The faired acceleration amplitudes read from Figure 8 and listed in Table II were inserted in the formulas $R_{2,3} = ((a_2)^2+(a_3)^2$ and $R_{5,6} = (a_5)^2+(a_6)^2$ in order to obtain the resultants of 119g vertical on the forward plate, and 130g vertical on the aft plate.

Test No. 3 was a vertical drop on the wedge (Dwg. 158662) with a computed impact velocity of 30 FPS vertical. The unit was dropped at 270° as referenced in Figure 2.

No record was obtained for drop No. 3 because of a malfunction in the tape recorder. Figure 9 shows a front view of the unit after all drops were completed.

J. A. Lemire
J. A. LEMIRE - 7325-2

Dale Buchanan
7321 Project Engineer: DALE BUCHANAN - 7321-5

Approved By: R. S. HOOPER - 7321-5

JAL:7325-2:mw

Encl: Figs. 1-9
Tables I, II

Copy to:
J. M. Wiesen, 1442
D. S. Bliss, 2344
W. L. Stevens, 7162
D. M. Bruce, 7182
E. H. Copeland, 7321
C. L. Johnson, 7523
L. C. Horpedahl, W-1, LASL, Attn: S. D. Huffman
R. S. Gauler, GMX-3, LASL, Attn: D. F. Mitchell
R. K. Smeltzer, 3421-3

[redacted]

#1124

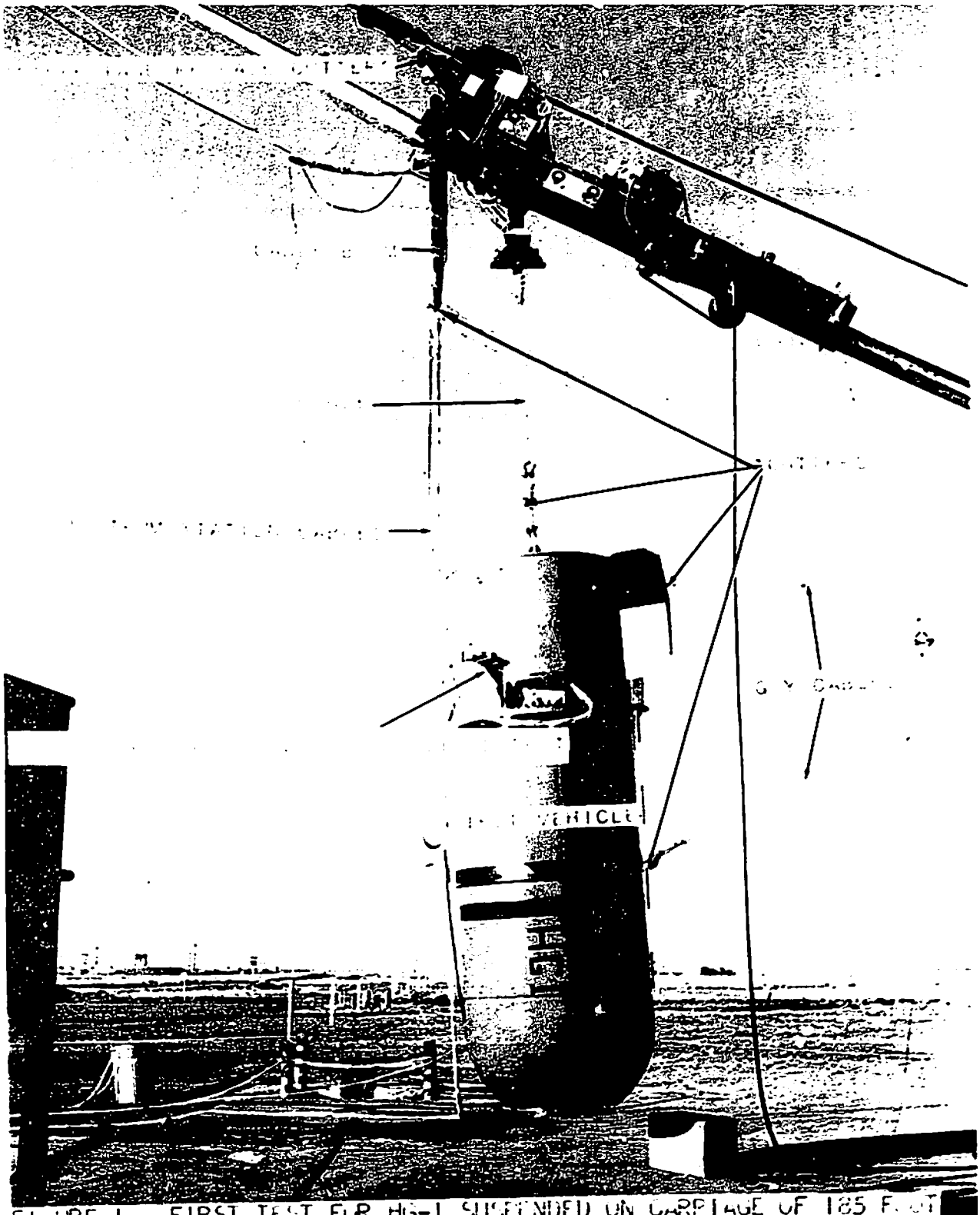

FIGURE 1 - FIRST TEST FOR HG-1 SUSPENDED ON CARRIAGE OF 185 FOOT TOWER -- DROP TOWER TESTS OF FULL SCALE HONEYCOMB NOSE

[redacted] PROJECT NO. T-1745

D#61-20394

[redacted]

UNCLASSIFIED

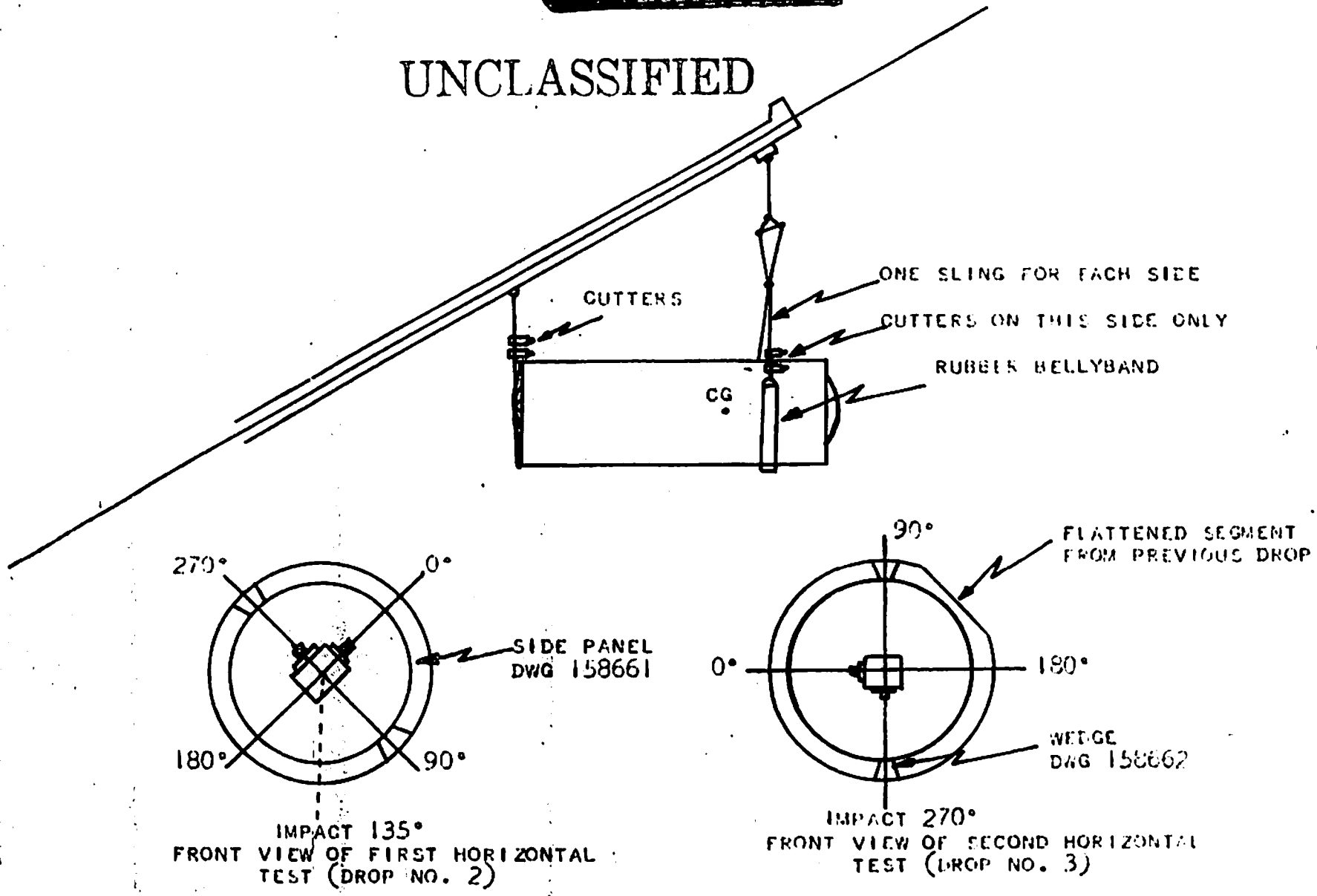

FIGURE 2 - DRAWING SHOWING SUSPENSION AND ORIENTATION OF UNIT FOR TEST NO'S. 2 AND 3 -- DROP TOWER TESTS ON FULL SCALE HONEYCOMB NOSE

UNCLASSIFIED

PROJECT NO. T-17452

[redacted]

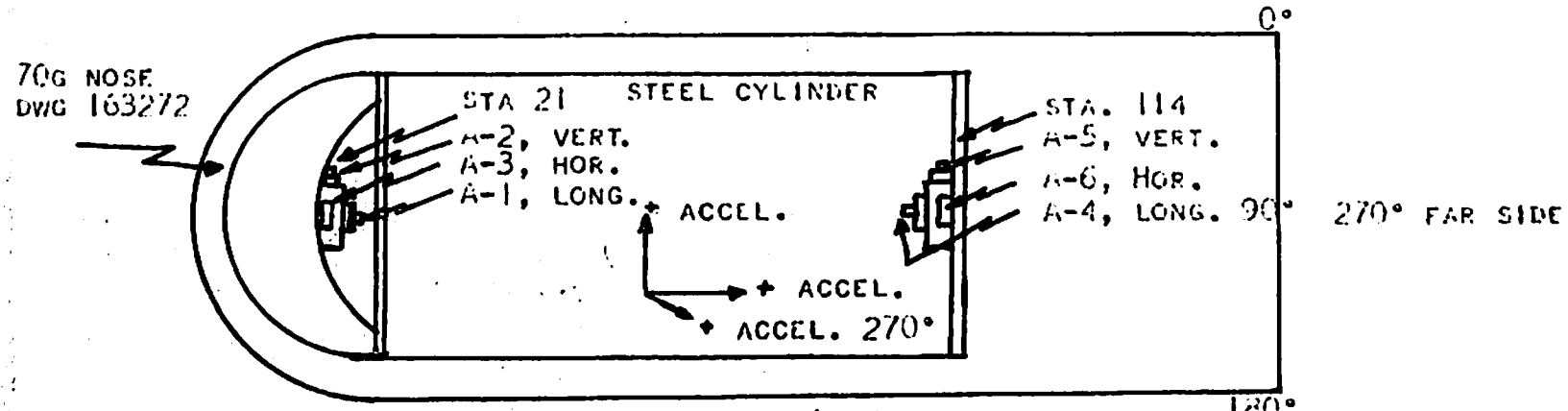

SIDE VIEW OF TEST NO. 1, DYNAMIC IMPACT ON NOSE (V_v58 FPS, $V_4$51.3 FPS)

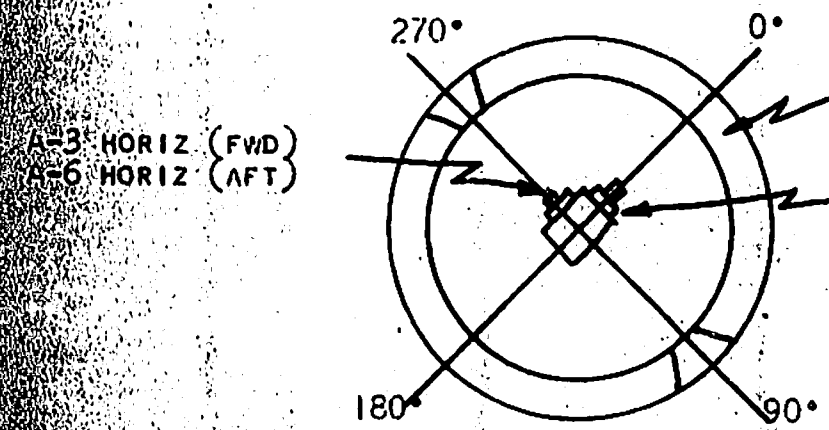

FRONT VIEW OF FIRST HORIZONTAL DROP (TEST NO. 2, STATIC) (VIMP 40 FPS)

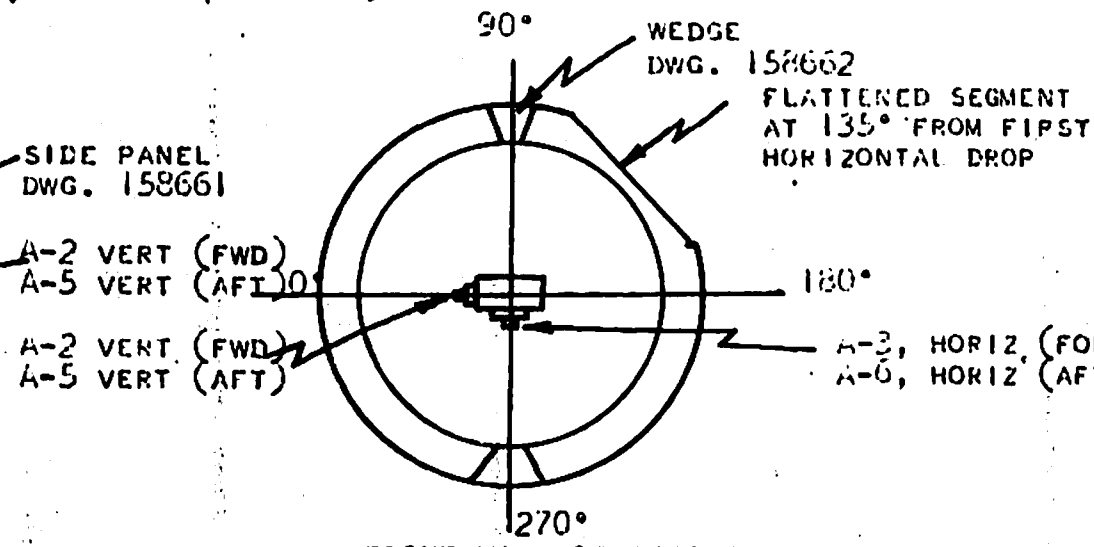

FRONT VIEW OF SECOND HORIZONTAL DROP (TEST NO. 3, STATIC) (VIMP 30 FPS)

FIGURE 3 - DRAWING SHOWING STATION LOCATION AND ORIENTATION OF INSTRUMENTATION AND UNIT FOR ALL THREE DROP TESTS -- DROP TOWER TESTS ON FULL SCALE HONEYCOMB NOSE

PROJECT NO. T-17452

UNCLASSIFIED [redacted]

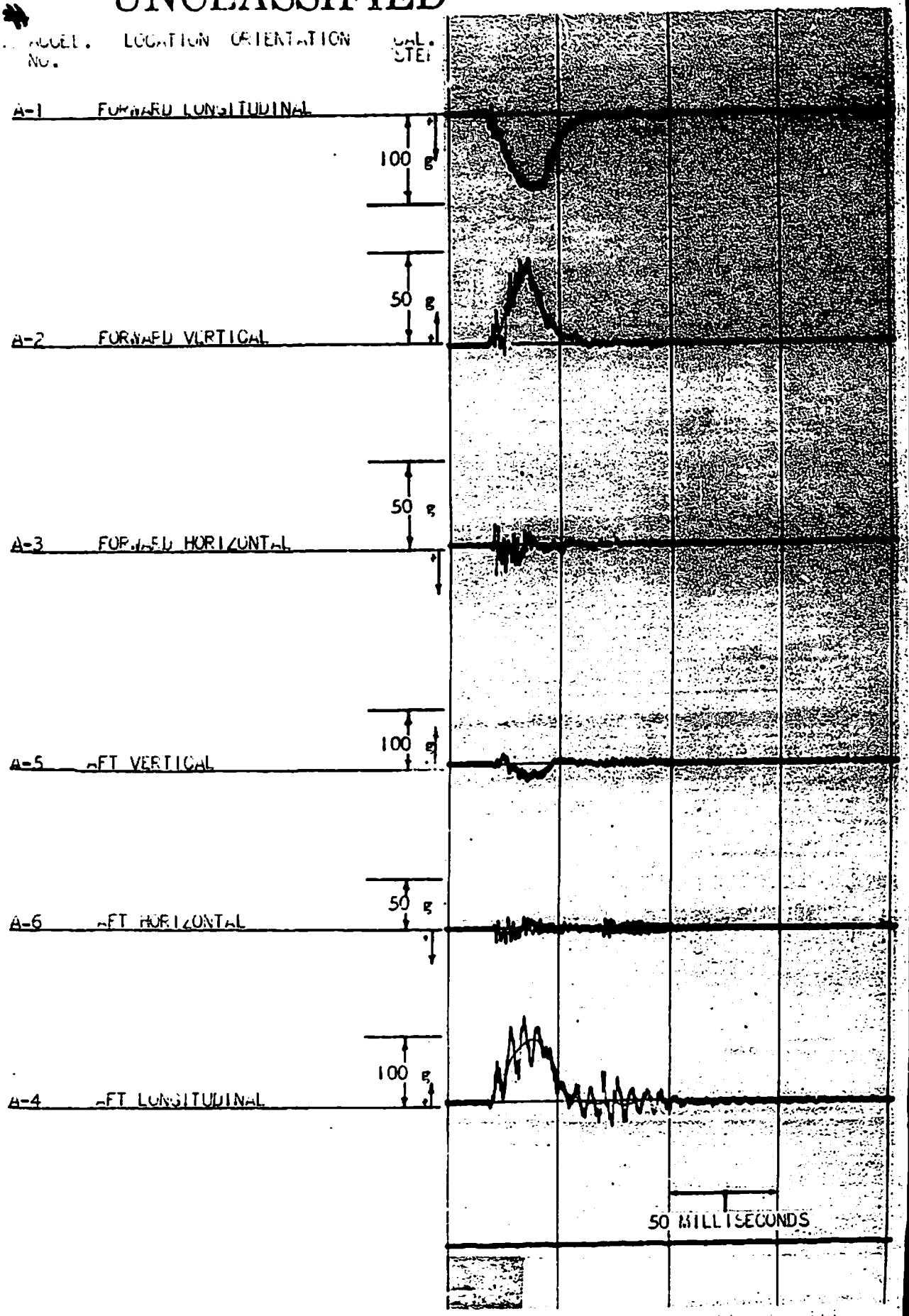

UNCLASSIFIED

[redacted]

#1128

UNCLASSIFIED

FIGURE 5 - NOSE OF UNIT AFTER IMPACT--DROP TOWER TESTS ON FULL SCALE HONEYCOMB NOSE

[redacted] PROJECT NO. T-17452

D#0-10208

UNCLASSIFIED

D# 0-10210

UNCLASSIFIED

[redacted]

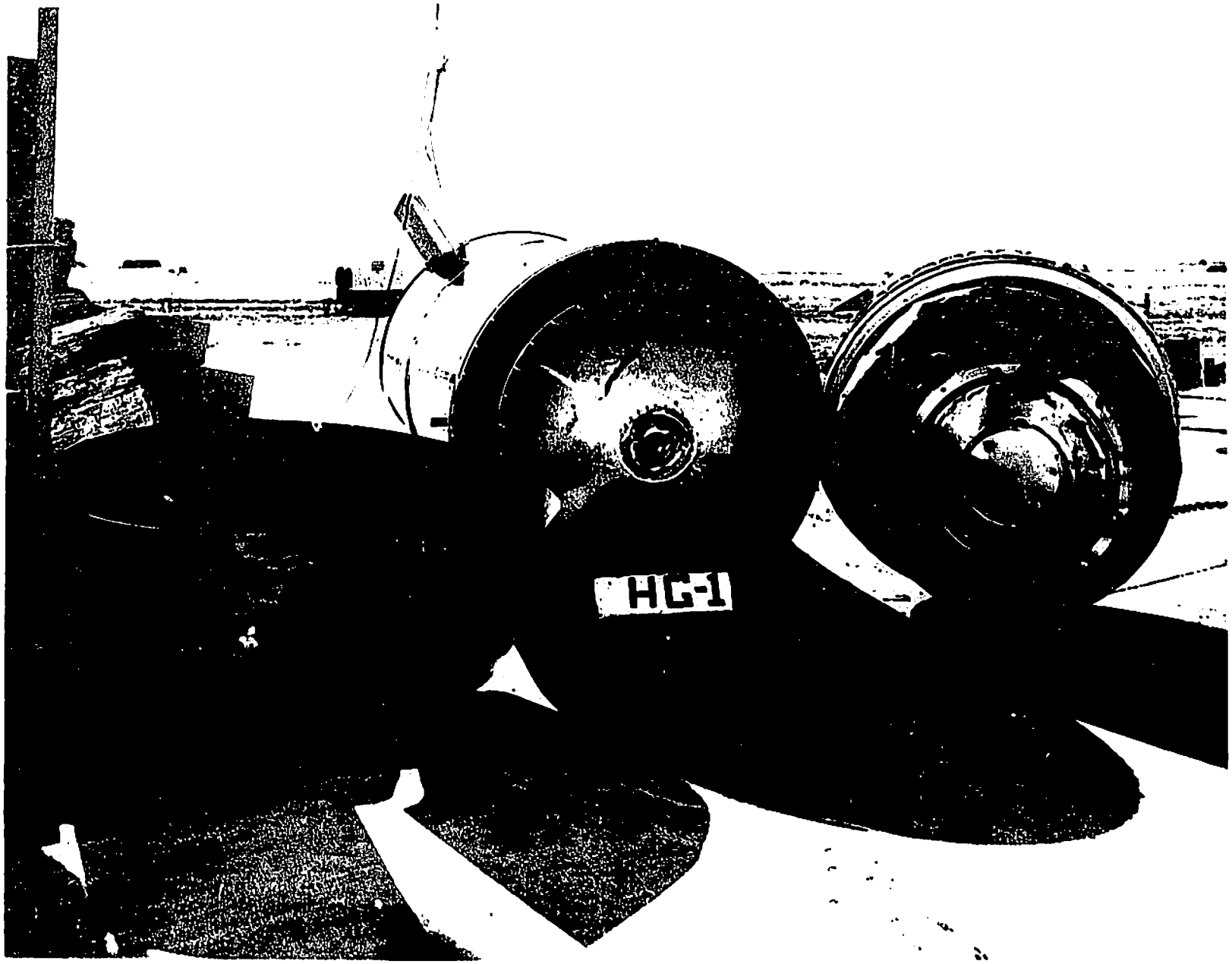

FIGURE 6 - VIEW SHOWING NOSE DISASSEMBLED AFTER IMPACT -- DROP TOWER TESTS ON FULL SCALE HONEYCOMB NOSE

PROJECT NO. T-17452

UNCLASSIFIED

[redacted]

#1124

D#61-20395

UNCLASSIFIED

FIGURE 7 - FRONT VIEW OF UNIT AFTER IMPACT ON SIDE PANEL AT 135° -- DROP TOWER TESTS ON FULL SCALE HONEYCOMB NOSE

PROJECT NO. 1-1745.

UNCLASSIFIED

#130

#1131

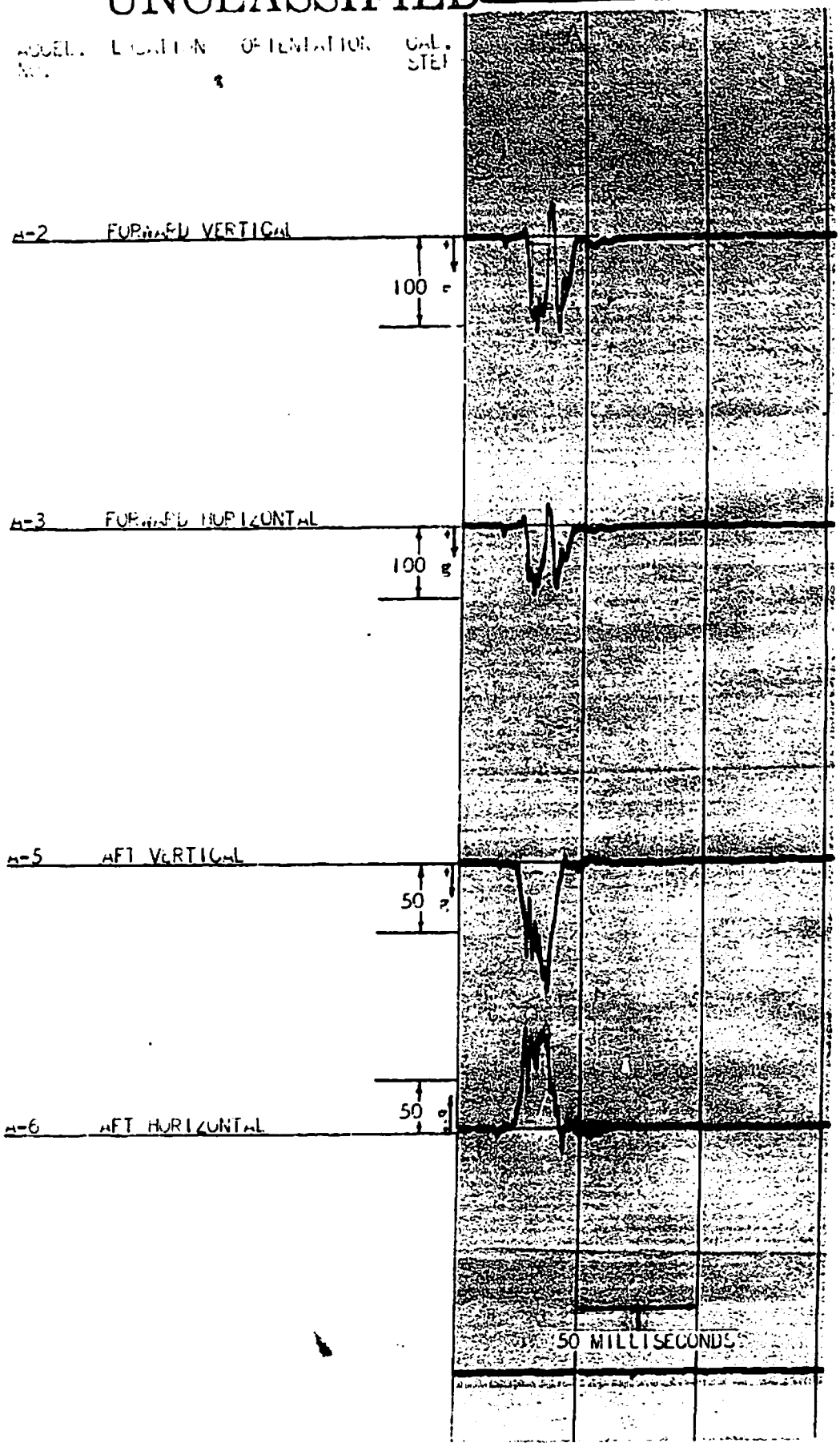

FIG. 4 - OSCILLOGRAPH RECORD FROM DROP NO. 2, V_V = 40 FPS -- DROP TUNEL TESTS OF FULL SCALE HONEYCOMB NOSE

PROJECT NO. T-17452

D#61-20396

FIGURE 9- FRONT VIEW OF UNIT AFTER IMPACT ON WEDGE AT 270° -- DROP TOWER TESTS ON FULL SCALE HONEYCOMB NOSE

PROJECT NO. T-17452

UNCLASSIFIED

UNCLASSIFIED

#1132

T-17452

TABLE I

Table of Accelerometers Used on All Three Tests of HG-1 Drop Tests on Full Scale Honeycomb Nose (Drawing No. 163272)

Statham Accelerometers

No.	Ser. No.	Type	Range (± g's)	Nat. Freq. (cps)	Fig. Ref. No.
A-1	5534	A-5-A 200 350	200	-	9
A-2	6914	A-5-A 200 350	200	-	9
A-3	6019	A-5-A 200 350	200	910	9
A-4	1665	A-5-A 200 335	200	1120	9
A-5	1686	A-5-A 100 335	100	670	9
A-6	634	A-5-A 100 300	100	810	9

UNCLASSIFIED

#1134

TABLE II

Table of Accelerations for HC-1 Tests 1, 2, and 3
Drop Tests on Full-Scale Honeycomb Nose (Drawing No. 163272)

Inst. No.	Location	Direction	Test No. 1 - Dynamic Vertical Drop on Flat Concrete Target V_v = 58 fps; V_h = 51 fps					Test No. 2 - Static Horizontal Drop (Unit Oriented at 135°) on Flat Concrete Target Impact Velocity = 40 fps					Test No. 3 - Static Horizontal Drop (Unit Oriented at 270°) on Flat Concrete Target Impact Velocity = 30 fps				
			Acceleration (g's or Rad/sec²)			Time (ms)		Acceleration (g's or Rad/sec²)			Time (ms)		Acceleration (g's or Rad/sec²)			Time (ms)	
			Max (+)	Max (-)	Faired	Rise	Pulse	Max (+)	Max (-)	Faired	Rise	Pulse	Max (+)	Max (-)	Faired	Rise	Pulse
A-1	Forward plate, Sta. 21	Longitudinal	85.6	12.0	83.6	12.9	39.7						No record				
A-2	Forward plate, Sta. 21	Vertical	47.7	6.3	41.3	10.2	29.8	107	38.1	89.9	1.78	8.3					
A-3	Forward plate, Sta. 21	Horizontal	18.7	13.9	5.3	3.0	12.6	96.4	30.2	77.3	1.50	8.4					
										119.0*							
A-4	Aft plate, Sta. 114	Longitudinal	132	38.2	86.8	12.4	34.2										
A-5	Aft plate, Sta. 114	Vertical	30.9	18.0	22.8	4.8	18.9	95.5	5.9	89.5	9.8	17.9					
A-6	Aft plate, Sta. 114	Horizontal	14.0	10.5				98.1	20.9	90.3	9.0	17.5					
										130.0**							

All accelerations measured with seismic-type accelerometer and read according to SC-4452(M), Section D, Paragraph 2.1.1, dated June 1961.

*(R 2,3) - Resultant of A2 and A3.
**(R 4,5) - Resultant of A4 and A5.

UNCLASSIFIED