[redacted]

UNCLASSIFIED

0902

SANDIA SYSTEMATIC DECLASSIFICATION REVIEW
1st Review Date: 7/21/98
Authority: ADC
Name: W Sayre
2nd Review Date: 7/23/98
Authority: ADD
Name: RB Craner
Determination (Circle Number):
1. Classification Retained
2. Classification Changed to: U
3. Contains No DOE Classified Information
4. Coordinate With:
5. Contains UCNI? No
6. Comments: OK for Dennis

MAY 29 1961
TK-53, 3.2
T-16810
13.858.00
RS 7321/9712

TO: DISTRIBUTION

Re: Drop Tower Test of the Half-Scale Nose, Honeycomb Type

These drop-tower tests were conducted to study the shock-mitigating capability of a half-scale honeycomb-type nose for use in the development of a shock-absorbing system for the full-scale TK-53. Eleven drop tests were conducted.

These drop tests were conducted employing vertical velocity only. The effects of combined horizontal and vertical velocity were simulated by using an angle target and orienting the longitudinal axis of the cylinder perpendicular to the target surface. The longitudinal velocity (V_L) was along the longitudinal axis of the cylinder. The normal velocity (V_N) was parallel to the target surface and normal to the longitudinal axis of the cylinder.

The instrumented cylinder with noses of two different designs was tested at velocities of V_L = 42.4 ft/sec, V_N = 37 ft/sec; V_L = 42.4 ft/sec, V_N = 15.25 ft/sec; V_L = 42.4 ft/sec, V_N = 24.5 ft/sec; V_L = 43.8 ft/sec, V_N = 36.3 ft/sec; and V_L = 43.8 ft/sec, V_N = 25.3 ft/sec. All drops were made on angle targets. Two drops were made with V_L of 42.4 ft/sec on flat targets. All tests were made on concrete targets.

The results of these tests showed that the honeycomb failed in column in many instances. The honeycomb bonding materials used between the forward honeycomb section and the honeycomb portion that mounts to the instrumented cylinder failed in many of the tests that had simulated longitudinal and normal impact velocities. The highest maximum faired acceleration in the longitudinal axis was 264.7 g's. The average acceleration on all drops in this longitudinal axis was between 55 and 80 g's, maximum faired pulse.

INVENTORIED
AUG 6 1964
342

CENTRAL RECORD FILE
ACCORDING TO
CARD
FILE No. TX-53
2-2

RECEIVED
MAY 31 1961
CENTRAL RECORD FILE

INVENTORIED
SEP 14 '65

SANDIA SYSTEMATIC DECLASSIFICATION REVIEW
DOWNGRADING OR DECLASSIFICATION STAMP
CLASSIFICATION CHANGED TO: U
AUTHORITY: R. B. Craner
PERSON CHANGING MARKING & DATE: Emilda Selph 7/30/98
RECORD ID: 98SN3076
PERSON VERIFYING MARKING & DATE: WC Sayre 7/30/98
DATED: 7/23/98

[redacted]

UNCLASSIFIED

[redacted]

UNCLASSIFIED

Object of Test

These tests were conducted to study the shock-absorbing capability of a half-scale honeycomb nose for use in the development of a shock-absorbing system for the full-scale TX-53.

Reason for Test

This test was requested in a Work Order Authorization from Mr. E. I. Bruce, 1217, to Mr. A. W. Reger, 1613, dated January 11, 1960. Mr. R. D. Grover, 1217, was the consultant.

Summary of Past Tests

No past tests have been made by Organization 7300 on the TX-53 half-scale honeycomb-type nose.

Setup for Tests

Figure 1 shows a typical setup for the tests made. The components making up the object tested are the Half-Scale TX-53 Cylinder, Drawing No. DL-10628; the Honeycomb-Type Half-Scale Nose, Drawing No. SK 9(1217)1828, Issue E, modified; and Drop Tower Sling (Handling Band), Drawing No. SK 1217(740-8). The test equipment used was a CEC Oscillograph, Model 5-114 P3, Serial No. 508AM13, using 7-362 galvonometers and Kintel Amplifiers, Model 111BF, mounted in the tower instrumentation panel. A CEC Oscillograph, Model 5-119R, Serial No. 9071, was used on some tests.

Figure 2 shows the location of the instrumentation in the test item. Table I is a list of the accelerometers used in the tests and includes the location, type, range, and serial number of each.

The forward nose piece was formed of 3/16-inch-cell (0.002-inch wall thickness) 5052 aluminum honeycomb and was bonded to a center section of 3/16-inch-cell (0.002-inch wall thickness) aluminum honeycomb. The center section was then bonded to the contoured honeycomb, 1/8-inch cell, 0.0015-inch wall, 5052 aluminum. This type of nose construction was used on the first six drops and is shown in Figure 3 diagram, Type A. Later drops used nose sections as shown in Figure 3 diagram, Type B, with 3/16-inch cell, 0.001-inch wall, 5052 aluminum. Honeycomb nose "A" was mounted to the test cylinder's contoured nose by twelve 3/8-inch bolts. Honeycomb nose "B" was mounted to the test cylinder by four 3/8-inch bolts on a modified contour front plate.

UNCLASSIFIED

UNCLASSIFIED

Procedure

The test cylinder with the honeycomb-type nose attached was hung on a static boom on the 200-foot drop tower, where drops with vertical velocity only are made. The unit had a handling band attached around the test cylinder. A sling made of 1/4-inch aircraft cable was attached to the handling band and to an eyebolt mounted on the aft plate of the test cylinder. This sling was run through a cutter loop. This loop was brought through explosive cable cutters and attached to the static boom by a 5/8-inch bolt.

The sling supporting the unit was adjusted by means of cable clamps to make the longitudinal axis of the unit 49 degrees to the horizontal and normal to the 41-degree target surface. The signal cables, which run to the amplifiers and recorders, were connected to the accelerometers in the unit and secured under a plate at the aft end of the unit. This plate protected the cables upon slapdown of the unit. Extra instrument-cable loops were made and attached to the static boom by means of a wire run through a cable cutter. The Guillotine cable cutters were then armed and the unit was raised over the previously placed 41-degree target at the correct height to give velocities of 42.4 ft/sec along the longitudinal axis of the weapon and 37 ft/sec normal to this longitudinal axis.

A grid with 4-foot squares was placed on the Fastax and tracking-camera side of the target to facilitate data reduction of faster films and to check the angle of impact. A timer clock was used to record time after impact. The time of initial impact was indicated by a stroboflash unit. The timer clock and stroboflash unit were used to correlate the position of the unit with time (in milliseconds) after impact.

A pulse from the tower control building fired the Guillotine cutters on the unit and instrument cables, and dropped the unit. The Fastax cameras were started by clocks in the control building. Drops G-1, G-3, G-4, and G-7, were all made the same as previously explained and with the same impact velocities.

For Drop Tests G-5 and G-6, the test unit was attached to the tower in the same way, except the unit was oriented with its longitudinal axis normal to a 20-degree target and raised to sufficient height to obtain a longitudinal velocity of 42.4 ft/sec and a normal velocity of 15.3 ft/sec.

For Drop Test G-8, the unit was attached the same as previously and impacted on a 30-degree target with a longitudinal velocity of 42.4 ft/sec and a normal velocity of 24.5 ft/sec.

UNCLASSIFIED

[redacted]

For Drop Test G-10, the test unit was made to impact on a 40-degree target with a longitudinal velocity of 43.8 ft/sec and a normal velocity of 36.3 ft/sec.

Drop Test G-11 was made on a 30-degree target with a longitudinal velocity of 43.8 ft/sec and a normal velocity of 25.3 ft/sec.

Drop Tests G-2 and G-9 were made on a flat target with a longitudinal impact velocity of 42.4 ft/sec. For these two drops, the unit was supported on the static boom by a harness of 1/4-inch cable attached to the cutter loop as previously explained. The harness in these two drops was attached to the test cylinder by two forged eyebolts mounted on the aft cover of the test cylinder. The unit was raised on the tower over the impact target at a height to give a longitudinal impact velocity of 42.4 ft/sec. The grid, timer clock, and stroboflash were set up as previously explained.

Results

The results of these tests showed the half-scale honeycomb-type nose was not able to stand the impacts at the tested velocities. The greatest maximum faired acceleration in the longitudinal impact axis was 264.7 g's on Drop No. 10, with a pulse duration of 5.1 milliseconds. This acceleration and those of the other drops are shown in Table II. A typical oscillograph record of these drops is shown in Figure 6.

The failure of the bonding material (Normco FM 47), used to bond the two sections of the nose together, failed (Figure 4) because of the shearing forces exerted during the drop. The drop tests showed that the failure of the bonding material and the column failure of the honeycomb (Figure 5) which was used longitudinal to the axis of the test unit were the contributing factors for the high accelerations obtained.

Damage photos were taken of each drop after the drop was completed. Lateral accelerometers A-3 and A-7 were not used after Drop Test G-3. The angular accelerometer A-4 was not used after Drop No. G-9. No record was obtained for Drop No. G-4.

Conclusions and Recommendations

These tests showed that the present design of the half-scale honeycomb-type nose will not mitigate the impact shocks to the 50-g level. The bonding

UNCLASSIFIED

material (Monsco FM 47) on the present design will not allow the nose to do its proper job with combined longitudinal and lateral velocity impacts.

J. H. Stoever

J. STOEVER - 7323-3

Del Buchanan for

7321 PROJECT ENGINEER: B. JOHNSON - 7321-5

APPROVED BY: R. S. HOOPER - 7321-5

JS:7323-3:5/mh

Distribution:
1/6A - E. I. Bruce, 7117, Attn: R. D. Grover
2/6A - J. M. Wiesen, 1442
3/6A - D. M. Bruce, 7182
4/6A - E. H. Copeland, 7321
5/6A - J. R. Harrison, 7523
6/6A - R. K. Smeltzer, Central Record File, 3421-3

UNCLASSIFIED

[redacted]

UNCLASSIFIED

#907

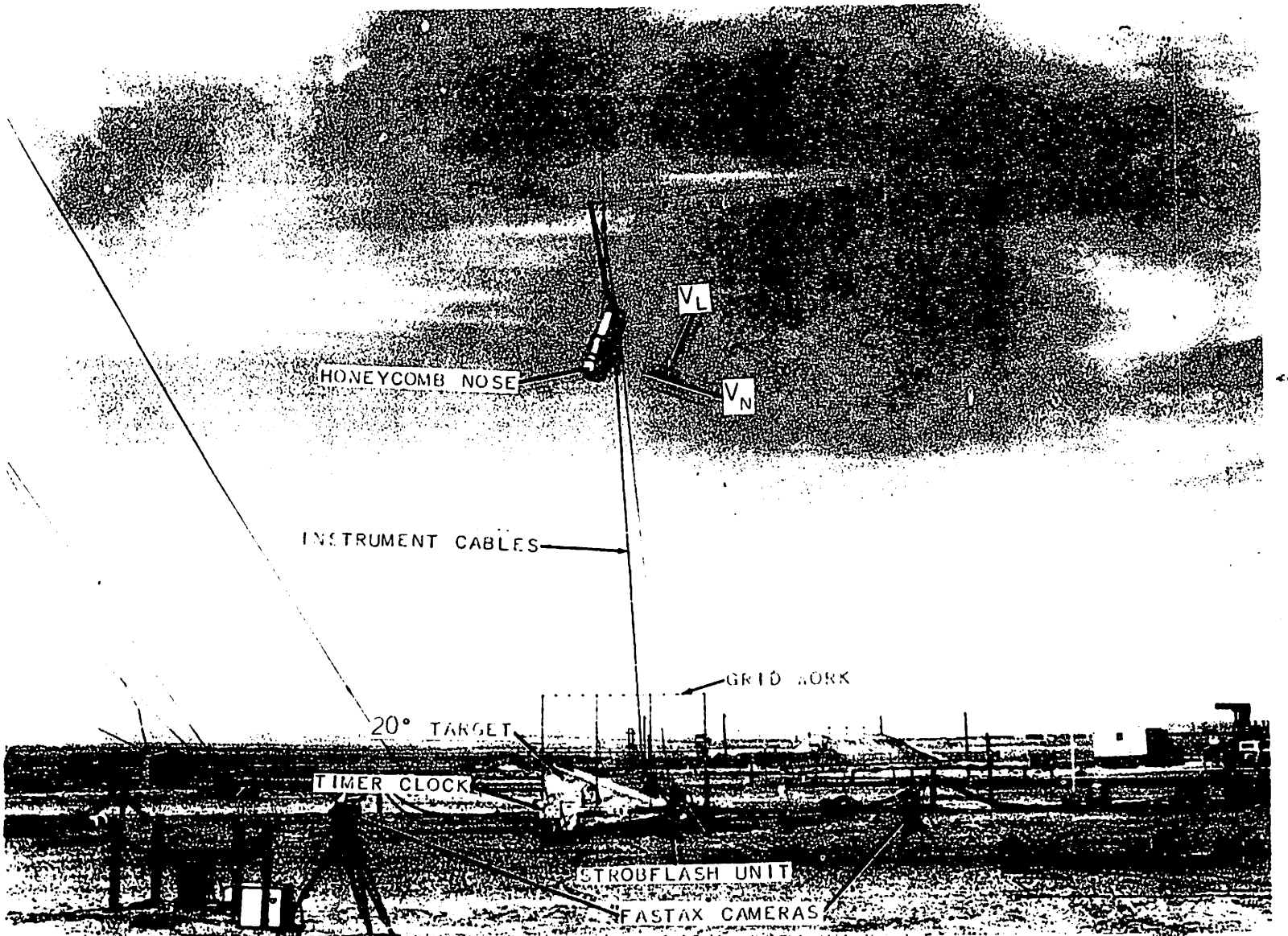

FIGURE 1 - THE HALF SCALE NOSE, HONEYCOMB TYPE, AND DUMMY FUFO HUNG IN DROP POSITION FOR DROP NO. 6 (20° TARGET, WITH V_L 42.4 FT/SEC AND V_N 15.3 FT/SEC) -- DROP TOWER TESTS OF THE HALF SCALE NOSE, HONEYCOMB TYPE

D#61-7016

PROJECT NO. T-16[illegible]
REF. SYM: 73.1/9712

[redacted]

UNCLASSIFIED

UNCLASSIFIED

A = ACCELEROMETER NO.

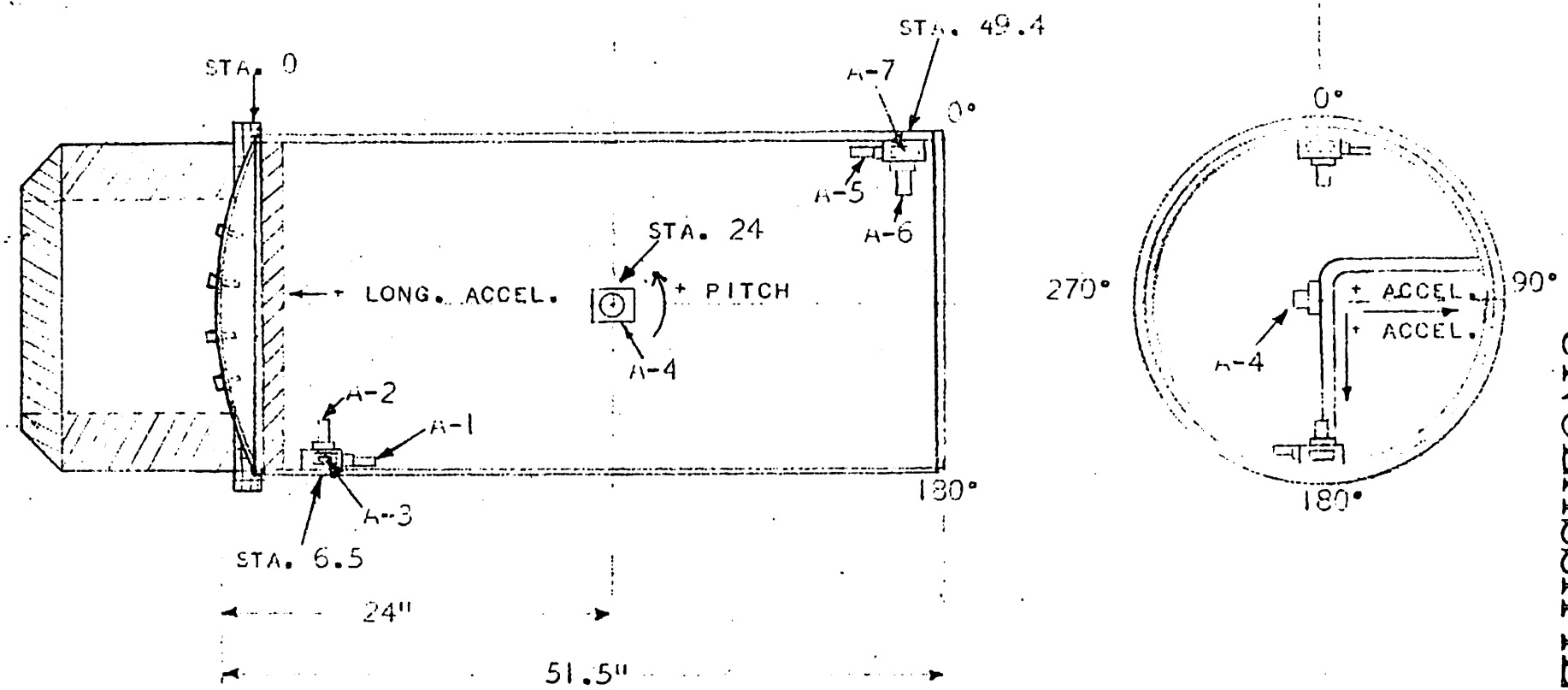

NOTE: POSITIVE ACCELERATIONS ARE SHOWN BY THE DIRECTION OF ARROWS.

FIGURE 2 - SKETCH OF INSTRUMENTATION MOUNTED IN FUFO CYLINDER AND HALF SCALE NOSE, HONEYCOMB TYPE MOUNTED ON FUFO -- DROP TOWER TESTS OF THE HALF SCALE NOSE, HONEYCOMB TYPE

PROJECT NO. T-16810
REF. SYM: 7321/3712

UNCLASSIFIED

UNCLASSIFIED

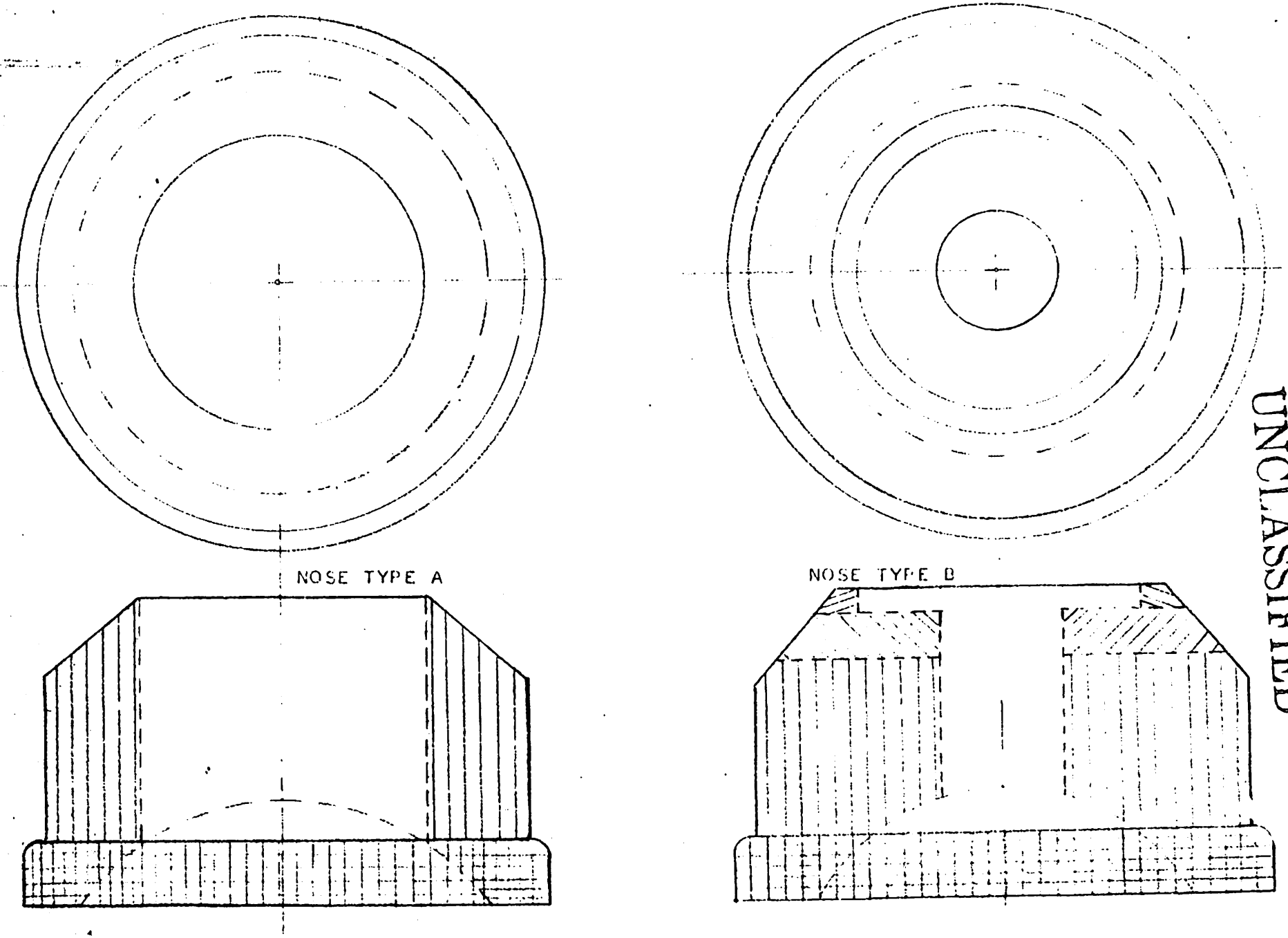

FIGURE 3 - DIAGRAM OF THE CONSTRUCTION OF TYPE A AND TYPE B NOSES USED ON THE HALF SCALE NOSE, HONEYCOMB TYPE -- DROP TESTS OF THE HALF SCALE NOSE, HONEYCOMB TYPE

PROJECT NO. T-16810
REF. SYM. 2321/9712

UNCLASSIFIED

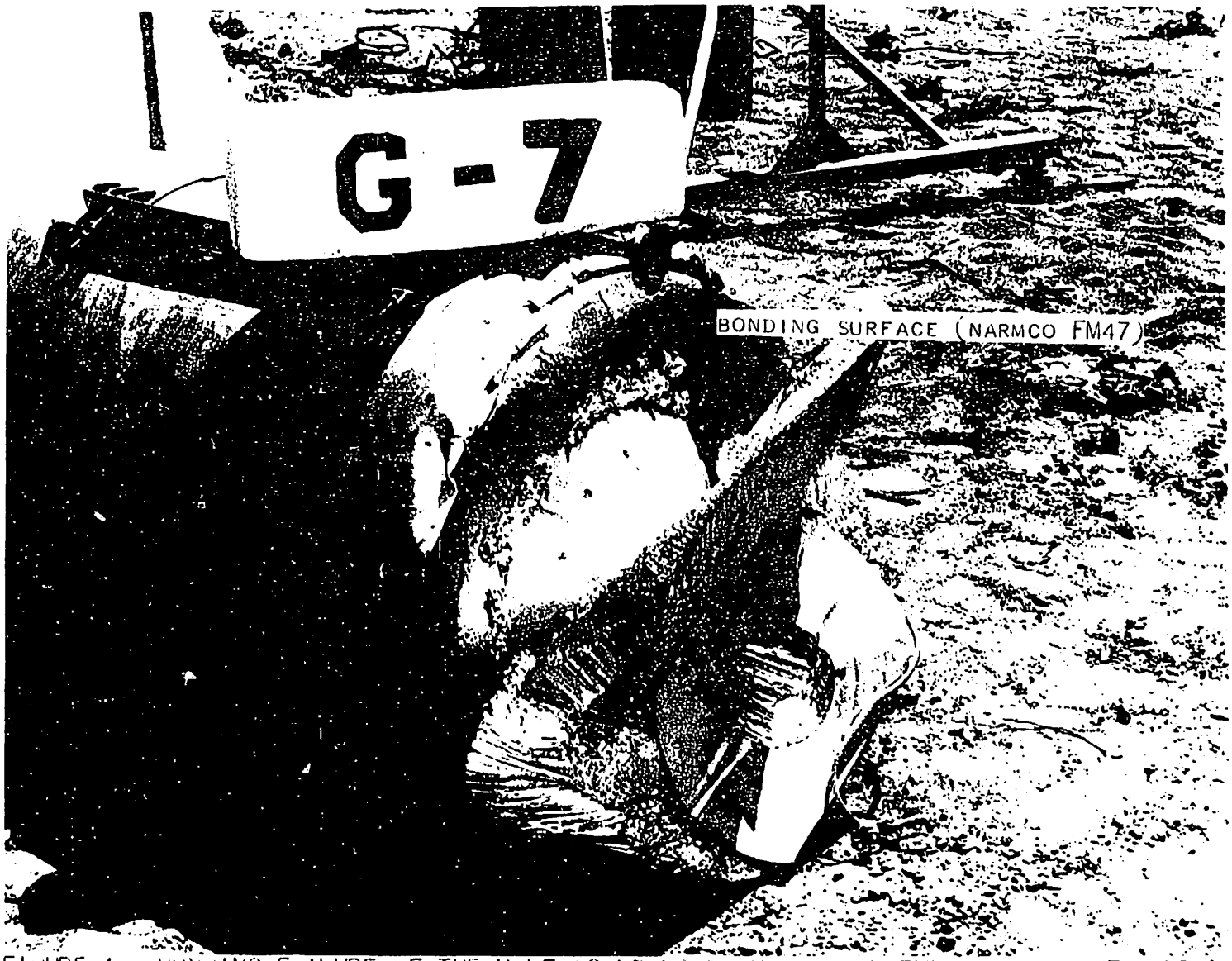

FIGURE 4 - BONDING FAILURE OF THE HALF SCALE NOSE, HONEYCOMB TYPE, SHOWN AFTER DROP NO. 7 (41° TARGET, V_L 42.4 FT/SEC AND V_N 37 FT/SEC) -- DROP TOWER TESTS OF THE HALF SCALE NOSE, HONEYCOMB TYPE

PROJECT NO. T-16810
REF. SYM: 7321/9712

D# 61-7017

#910

[redacted]

UNCLASSIFIED

#911

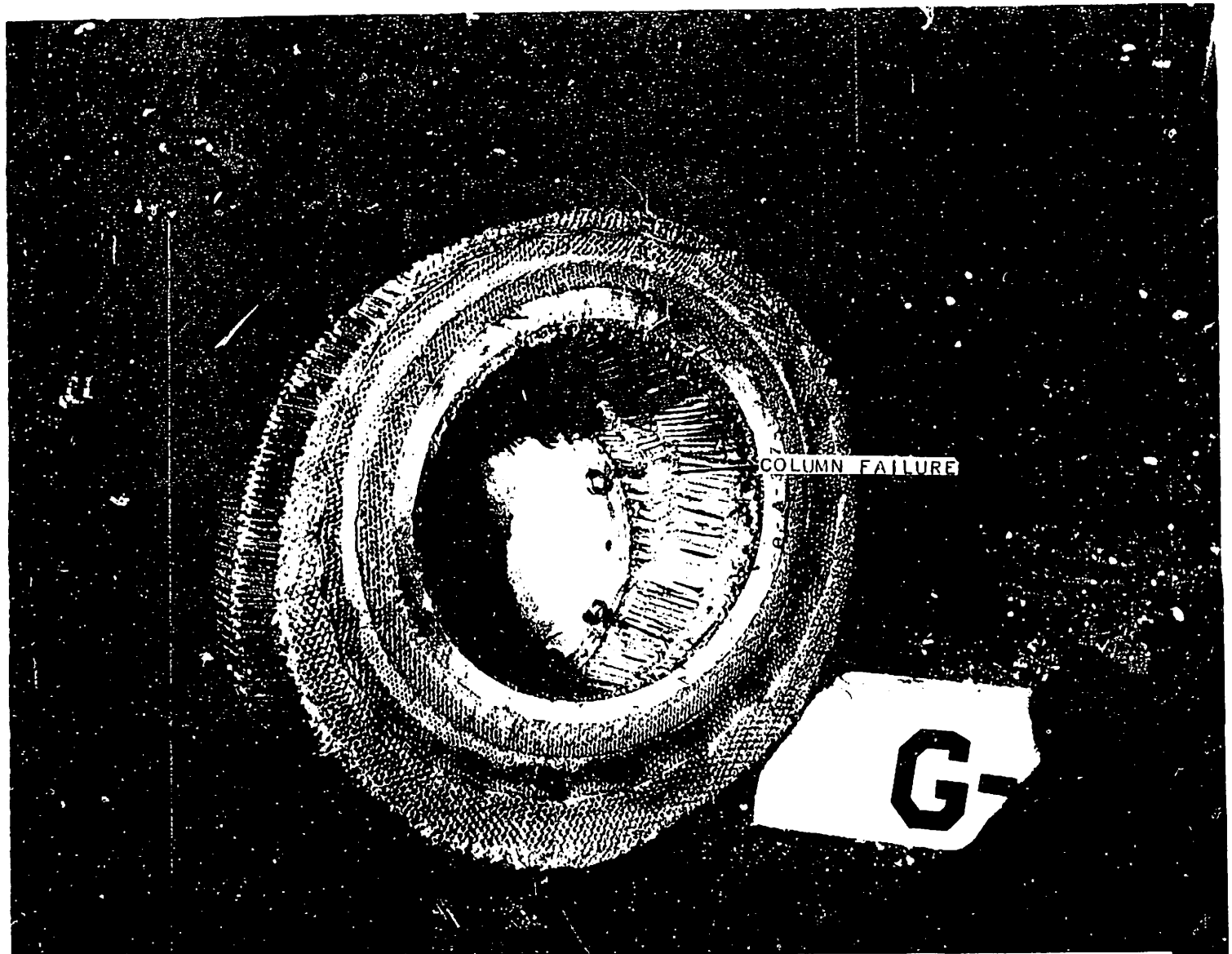

FIGURE 5 - COLUMN FAILURE ON HALF SCALE NOSE, HONEYCOMB TYPE, AFTER DROP NO. G-5 (20° TARGET, V_L 42.4 FT/SEC AND V_N 15.3 FT/SEC) -- DROP TOWER TESTS OF THE HALF SCALE NOSE, HONEYCOMB TYPE

PROJECT NO. T-1[illegible]10
REF. SYM.: 7321/[illegible]12

D# 61-7018

[redacted]

UNCLASSIFIED

[redacted]

#912

UNCLASSIFIED

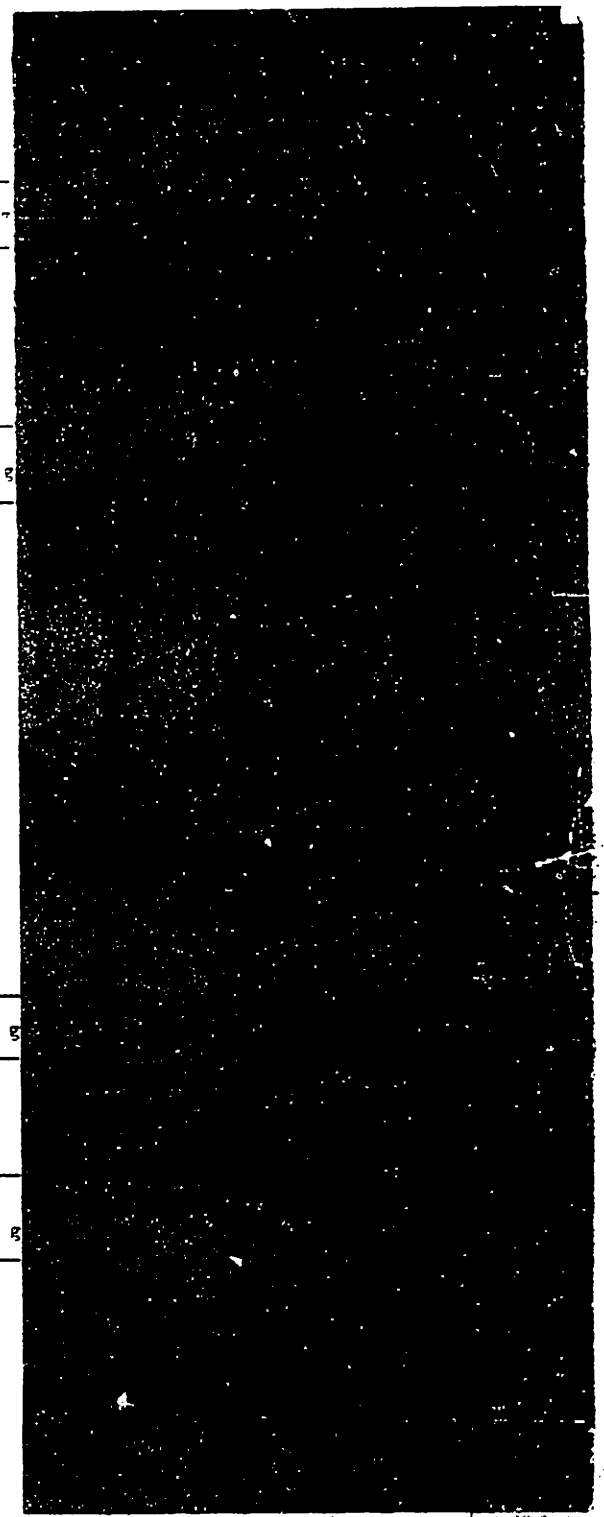

A-1 FWD. LONGITUDINAL ACCELEROMETER STA. 6.5

A-2 FWD. VERTICAL ACCELEROMETER STA. 6.5

A-5 AFT LONGITUDINAL ACCELEROMETER STA. 49.4

A-6 AFT VERTICAL ACCELEROMETER STA. 49.4

D#61-7019.

A = MAXIMUM AMPLITUDE
B = MAXIMUM FAIRED PULSE
C = RISE TIME
D = PULSE DURATION
E = 0.01 SECOND

FIGURE 6 - TYPICAL OSCILLOGRAPH RECORD OF TOWER DROP NO. G-11 AT V_L 43.8 FT/SEC AND V_N 25.3 FT/SEC ON 30° ANGLE TARGET -- DROP TOWER TESTS OF THE HALF SCALE NOSE, HONEYCOMB TYPE

PROJECT NO. T-16810
REF. SYM: 7321/9712

[redacted]

[redacted] UNCLASSIFIED

TABLE I

Table of Accelerometers Used on Drop Tower Tests
of the Half-Scale Honeycomb-Type Nose,
Drop Tower Tests on the Half-Scale Honeycomb-Type Nose

Accel No.	Location	Station	Model and Type (Statham)	Serial No.	Range
A-1	Forward Long.	Sta 6.5	A5A-500-350	3998	±500 g's
A-2	Forward Vert	Sta 6.5	A5A-100-300	627	±100 g's
A-3	Forward Lat	Sta 6.5	A5A-100-350	2190	±100 g's
A-4	Angular CG	Sta 24	AA20-3M-350	51	±3000 rad/sec^2
A-5	Aft Long.	Sta 49.4	A5A-200-335	1665	±200 g's
A-6	Aft Vert	Sta 49.4	A5A-100-300	634	±100 g's
A-7	Aft Lat	Sta 49.4	A5A-100-300	623	±100 g's

[redacted]

TABLE II

Table of Accelerations for Drop Tower Tests, Half-Scale Honeycomb-Type Nose

Inst No.	Location	Direction	Drop No. G-1, 41° Target; Impact Vel of V_L 42.4 1/sec, V_N 37 1/sec (Nose Type A) Acceleration (g or Rad/sec^2) Max (+)	Max (-)	Faired	Time (ms) Rise	Pulse	Drop No. G-2, Flat Target; Impact Vel of V_L 42.4 1/sec (Nose Type A) Acceleration (g or Rad/sec^2) Max (+)	Max (-)	Faired	Time (ms) Rise	Pulse	Drop No. G-3, 41° Target; Impact Vel of V_L 42.4 1/sec, V_N 37 1/sec (Nose Type A) Acceleration (g or Rad/sec^2) Max (+)	Max (-)	Faired	Time (ms) Rise	Pulse
A-1	Fwd Long. Sta 6.5	Long.	15.6	69.5	-39.6	3.71	22.7	1.7	72.1	-53.7	3.9	30.3	3.3	56.8	-42.2	4.9	21.3
A-2	Fwd Vert Sta 6.5	Normal	8.8	26.4	-15.0	1.78	12.2	20.3	80.8	-	-	-	7.9	31.3	-22.5	2.2	9.5
A-3	Fwd Lat Sta 6.5	Lat	8.6	8.5	-7.5	3.20	14.1	9.2	9.5	-	-	-	11.0	9.3	+5.4	4.5	11.4
A-4	Angular CG Sta 24	Pitch	57.0	201.2	-158.0	-	-	131.5	159.7	-	-	-	120.5	300.6	-247.0	1.9	10.7
A-5	Aft Long. Sta 49.4	Long.	8.1	74.5	-47.4	4.0	22.2	6.7	72.6	-52.9	2.9	30.5	-	62.3	-41.5	3.8	21.9
A-6	Aft Vert Sta 49.4	Normal	15.0	3.5	+9.9	0.8	15.0	17.7	20.0	-	-	-	20.5	4.2	+13.9	1.9	10.6
A-7	Aft Lat Sta 49.4	Lat	12.0	15.0	-	-	-	58.3	23.5	-	-	-	13.7	19.8	-	-	-

Inst No.	Location	Direction	Drop No. G-5, 20° Target; Impact Vel of V_L 42.4 1/sec, V_N 15.3 1/sec (Nose Type A) Acceleration (g or Rad/sec^2) Max (+)	Max (-)	Faired	Time (ms) Rise	Pulse	Drop No. G-6, 20° Target; Impact Vel of V_L 42.4 1/sec, V_N 15.3 1/sec (Nose Type A) Acceleration (g or Rad/sec^2) Max (+)	Max (-)	Faired	Time (ms) Rise	Pulse
A-1	Fwd Long. Sta 6.5	Long.	9.4	79.4	-66.5	7.6	-	10.7	66.8	-61.7	8.2	40.4
A-2	Fwd Vert Sta 6.5	Normal	25.8	40.2	+18.3	1.9	30.4	44.9	16.0	+21.1	2.0	46.3
A-3	Fwd Lat Sta 6.5	Lat	-	-	-	-	-	-	-	-	-	-
A-4	Angular CG Sta 24	Pitch	200.0	323.0	+194.0	1.9	29.7	74.9	313.8	+275.6	1.4	44.6
A-5	Aft Long. Sta 49.4	Long.	6.9	90.8	-65.8	6.6	32.9	34.5	77.6	-66.0	7.1	30.2
A-6	Aft Vert Sta 49.4	Normal	50.5	19.2	+17.7	3.5	28.4	36.4	8.9	+24.5	1.8	27.7
A-7	Aft Lat Sta 49.4	Lat	-	-	-	-	-	-	-	-	-	-

Accelerations were measured with a seismic-type accelerometer with 0.6 dampening.
All records were read according to SCS-10, para 7.4 to 7.4.5.
Positive accelerations are shown by direction of arrows on (Figure 1).

[redacted]

UNCLASSIFIED

UNCLASSIFIED

TABLE III

Table of Accelerations for Drop Tower Tests, Half-Scale Honeycomb-Type Nose

Inst No.	Location	Direction	Drop No. G-7, 41° Target; Impact Vel of V_L 42.4 1/sec, V_N 37 1/sec (Nose Type B) Acceleration (g or Rad/sec^2) Max (+)	Max (-)	Faired	Time (ms) Rise	Pulse	Drop No. G-8, 30° Target; Impact Vel of V_L 42.4 1/sec, V_N 24.5 1/sec (Nose Type B) Acceleration (g or Rad/sec^2) Max (+)	Max (-)	Faired	Time (ms) Rise	Pulse	Drop No. G-9, Flat Target; Impact Vel of 42.4 1/sec (Nose Type B) Acceleration (g or Rad/sec^2) Max (+)	Max (-)	Faired	Time (ms) Rise	Pulse
A-1	Fwd Long. Sta 6.5	Long.	72.8	372.1	-242.9	1.3	3.7	4.1	80.2	-76.1	27.7	33.6	10.4	65.8	-57.5	7.9	27.6
A-2	Fwd Vert Sta 6.5	Normal	117.1	57.1	+76.8	21.2	29.4	38.2	29.1	+41.3	25.4	30.2	14.7	17.9	+8.8	17.1	25.4
A-3	Fwd Lat Sta 6.5	Lat	-	-	-	-	-	-	-	-	-	-	-	-	-	-	-
A-4	Angular CG Sta 24	Pitch	429.1	2223.7	+1156.3	21.5	27.5	127.3	504.5	-432.0	24.6	29.5	109.2	79.7	+81.9	15.8	24.0
A-5	Aft Long. Sta 49.4	Long.	150.1	268.4	-211.9	2.0	5.7	21.7	86.4	-81.3	27.0	30.0	2.2	76.6	-56.4	9.2	27.8
A-6	Aft Vert Sta 49.4	Normal	111.8	111.7	+47.1	23.2	32.7	52.3	28.0	+29.9	24.0	28.9	16.4	15.5	-4.9	3.8	7.4
A-7	Aft Lat Sta 49.4	Lat	-	-	-	-	-	-	-	-	-	-	-	-	-	-	-

Inst No.	Location	Direction	Drop No. G-10, 40° Target; Impact Vel of V_L 43.8 1/sec, V_N 36.3 1/sec (Nose Type B) Acceleration (g or Rad/sec^2) Max (+)	Max (-)	Faired	Time (ms) Rise	Pulse	Drop No. G-11, 30° Target; Impact Vel of V_L 43.8 1/sec, V_N 25.3 1/sec (Nose Type B) Acceleration (g or Rad/sec^2) Max (+)	Max (-)	Faired	Time (ms) Rise	Pulse
A-1	Fwd Long. Sta 6.5	Long.	56.4	340.3	-264.7	2.5	5.1	14.4	207.9	-165.3	22.8	26.5
A-2	Fwd Vert Sta 6.5	Normal	22.0	112.3	-95.0	13.9	20.4	26.4	70.7	-62.6	21.8	25.2
A-3	Fwd Lat Sta 6.5	Lat	-	-	-	-	-	-	-	-	-	-
A-4	Angular CG Sta 24	Pitch	-	-	-	-	-	-	-	-	-	-
A-5	Aft Long. Sta 49.4	Long.	270.5	96.5	+220.5	19.7	22.2	217.4	34.5	+176.2	22.9	13.9
A-6	Aft Vert Sta 49.4	Normal	80.7	33.7	+51.5	19.7	26.7	42.1	36.8	+33.0	20.9	23.8
A-7	Aft Lat Sta 49.4	Lat	-	-	-	-	-	-	-	-	-	-

Accelerations were measured with a seismic-type accelerometer with 0.6 dampening.
All records were read according to SCS-10, para 7.4 to 7.4.5.
Positive accelerations are shown by direction of arrows on (Figure 1).

UNCLASSIFIED

UNCLASSIFIED