[redacted] UNCLASSIFIED

SANDIA SYSTEMATIC DECLASSIFICATION REVIEW
DOWNGRADING OR DECLASSIFICATION STAMP

CLASSIFICATION CHANGED TO: U
Emelda Solph 6/30/98
PERSON CHANGING MARKING & DATE
W. C. Layne 7/1/98
PERSON VERIFYING MARKING & DATE

AUTHORITY: W. C. Layne
RECORD ID: 98SN2505
DATED: 6/17/98

SANDIA SYSTEMATIC DECLASSIFICATION REVIEW

1st Review Date: 6/10/98
Authority: ADD
Name: R B Craner
2nd Review Date: 6-17-98
Authority: ADD
Name: WC Layne

Determination (Circle Number):
1. Classification Retained
2. Classification Changed to: UNCL
3. Contains No DOE Classified Information
4. Coordinate With:
5. Contains UCAI?
6. Comments: Declassify

JUN 20 1961

File: TX-43, 3-2
T-17615
Project No. 13.734.00

TO: DISTRIBUTION

Re: Lug and Sway Brace Tests of TX-43 (U)

RECEIVED
JUN 21 1961
CENTRAL RECORD FILE

Summary of Test

Static tests were made to determine the structural adequacy of the TX-43 center case section to withstand lug and sway brace loads encountered during external carriage by the B-58 aircraft. In the sway brace test, failure occurred at a load of 68,000 pounds, equivalent to 138-percent of design limit load based on ultimate strength. Yielding in the vicinity of the load application area was noted at a load of approximately 50-percent design limit. In the lug test, failure occurred while increasing loads from 115 to 120-percent design limit based on yield strength. For these tests the limit loads had been increased to compensate for the effect on strength of the rise in temperature of the weapon skin during flight.

Object of Test

The object of this test was to determine the structural adequacy of the TX-43 center case section to withstand lug and sway brace loads simulating those encountered during external carriage by the B-58 aircraft. For these static tests, the limit loads were increased to compensate for the effect on strength due to the rise in temperature of the weapon skin during flight.

CENTRAL RECORD FILE
ACCOUNTABILITY
FILE No. TX-43 3-2

Details of the TX-43 Center Case Section are given in Dwg. No. 14528

Authorization for Test

The tests were performed in accordance with a Work Order Authorization from Organization 7122 to Organization 7321, dated March 1, 1961. Mr. R. M. Rayner, 7122-2, was test consultant, and Mr. R. E. Davis, 7182-2, supplied load and instrumentation information.

[redacted]

[redacted]

(17)

UNCLASSIFIED [redacted]

0408

Summary of Test Results

A similar test of the TX-43 Center Case Section, involving a different set of lug and sway brace loads, has been performed. Details are given in the report, "Static Tests of TX-43 Lug and Sway Brace", Test No. T-17149, dated September 29, 1960, CFRD.

Equipment and Instrumentation

A list of the loading equipment is included in Table I. The following instrumentation was used:

27 - Baldwin three-element rectangular rosette strain gages, Type FABR-12-12, resistance 122.0 ± 0.5 ohms, gage factor 2.09 ± 1%, Lot No. 21.

Procedure

The sway brace load test was performed first. For this, a TX-43 Center Case Section, instrumented with strain gages as shown in Figures 1 and 2, was mounted in the static test jig by a fixture in the forward end. Load was applied through a mild steel pad machined to the dimensions of the sway brace pad. Setup for this load is shown in Figure 3.

Load was applied in increments up to 125-percent design limit, based on yield strength. Strain gage readings were taken at each increment. The load was dropped to zero, and then increased again to failure of the case. No strain readings were taken during the second loading.

Setup for the lug test is shown in Figures 4 and 5. Three loads were applied simultaneously to the lug: a radial load P_z, a lateral load P_y, and a longitudinal load P_x. The lateral load was reacted through handling lugs on either side of the case, one of which may be seen in Figure 5. The radial load was reacted through the case mounting fixture and through wooden saddles across the aft portion of the case.

Loads were applied in increments of design limit based on yield strength. Loading was increased to failure, with strain gage readings being taken at each increment. Locations of the strain gages are shown in Figures 6 and 7.

Limit loads are given in Table I. Two limits are given for each load, one based on yield strength, and the other based on ultimate strength, with both having been adjusted upward to compensate for the effects of higher temperatures during actual flight.

Results

Strain gage readings taken during the sway brace and lug tests are given in Tables II and III. Principal stresses and their directions are given in Tables IV and V.

[redacted] UNCLASSIFIED

T-17615

To: Distribution

3

In the [illegible] test, failure occurred at a load of [illegible] pounds, equivalent to 138-percent of design limit load based on ultimate strength. The failure consisted of breaking through the case. The appearance of the outside of the case after failure may be seen in Figure 8.

Yielding in the vicinity of the loading pad was noted at a load of approximately 50-percent limit. Evidence of this was the larger incremental change in strain per increment of load, for Gage Nos. 10 through 15, 34 through 36, and 43 through 45, (see Table II for strains, and Figures 1 and 2 for gage locations). Stresses in Table IV were not calculated for these higher strains, since the stress-strain relationship becomes non-linear.

In the lug test, failure occurred while increasing the loads from 115 to 120-percent design limit based on yield strength. The failure consisted of tearing out the lug and shearing out a portion of the case. This is shown in Figure 9 and also Figure 7.

W. M. Sigmon

W. M. SIGMON, 7322-1

V. E. Kemp

7321 Project Engineer: V. E. KEMP, 7321-5

Approved by: R. S. HOOPER, 7321-5

WMS:br

Encs. Figures 1-9
Tables I-V

Distribution:
L. A. Dunn, 7122, Attn: R. M. Rayner (2 cys)
J. M. Wiesen, 1442
S. Johannesen, 2344-3
[illegible] Copeland, 7321
J. C. Harrison, 7523
[illegible] Smaltzer, 3421-3

UNCLASSIFIED

0410

[redacted]

[redacted]

UNCLASSIFIED

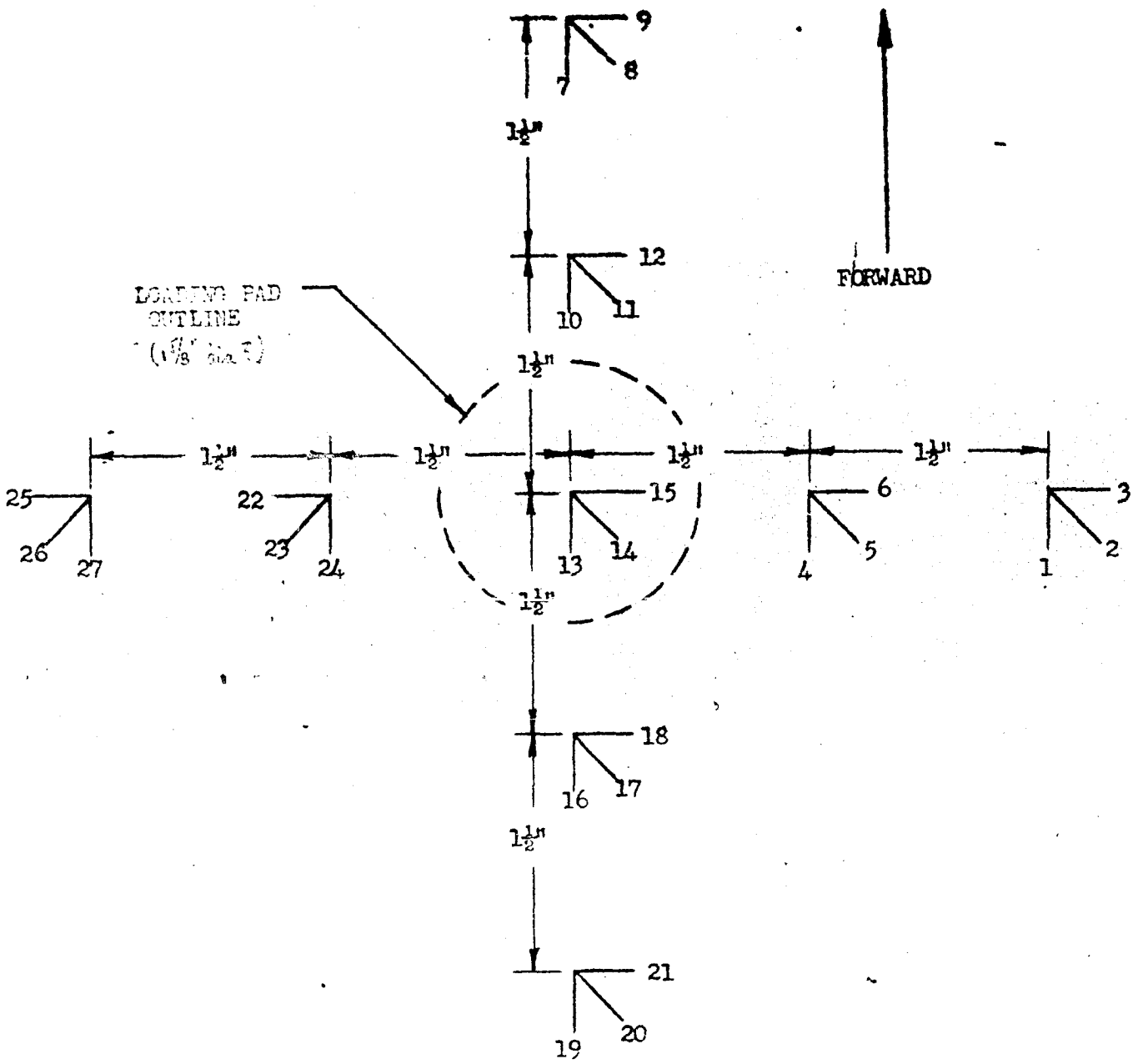

FIG. 1 - STRAIN GAGE PATTERN ON INSIDE OF CASE, SWAY BRACE LOAD TEST — LUG AND SWAY BRACE TESTS OF TX-43

UNCLASSIFIED

T-17615

0411

[redacted]

4

[redacted]

UNCLASSIFIED

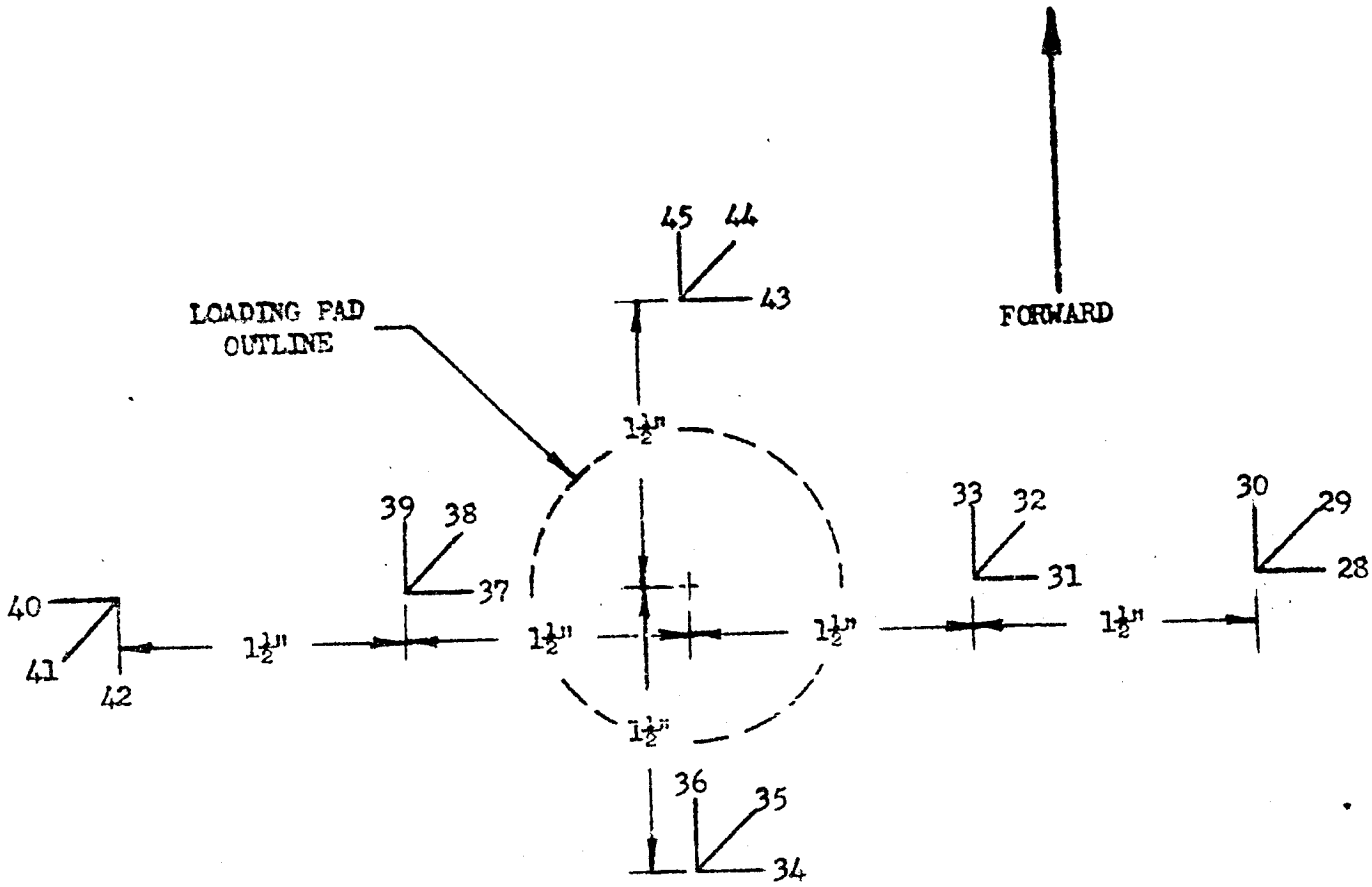

FIG. 2 - STRAIN GAGE PATTERN ON OUTSIDE OF CASE, SWAY BRACE LOAD TEST — LUG AND SWAY BRACE TESTS OF TX-43.

T-17615

UNCLASSIFIED

0412

[redacted]

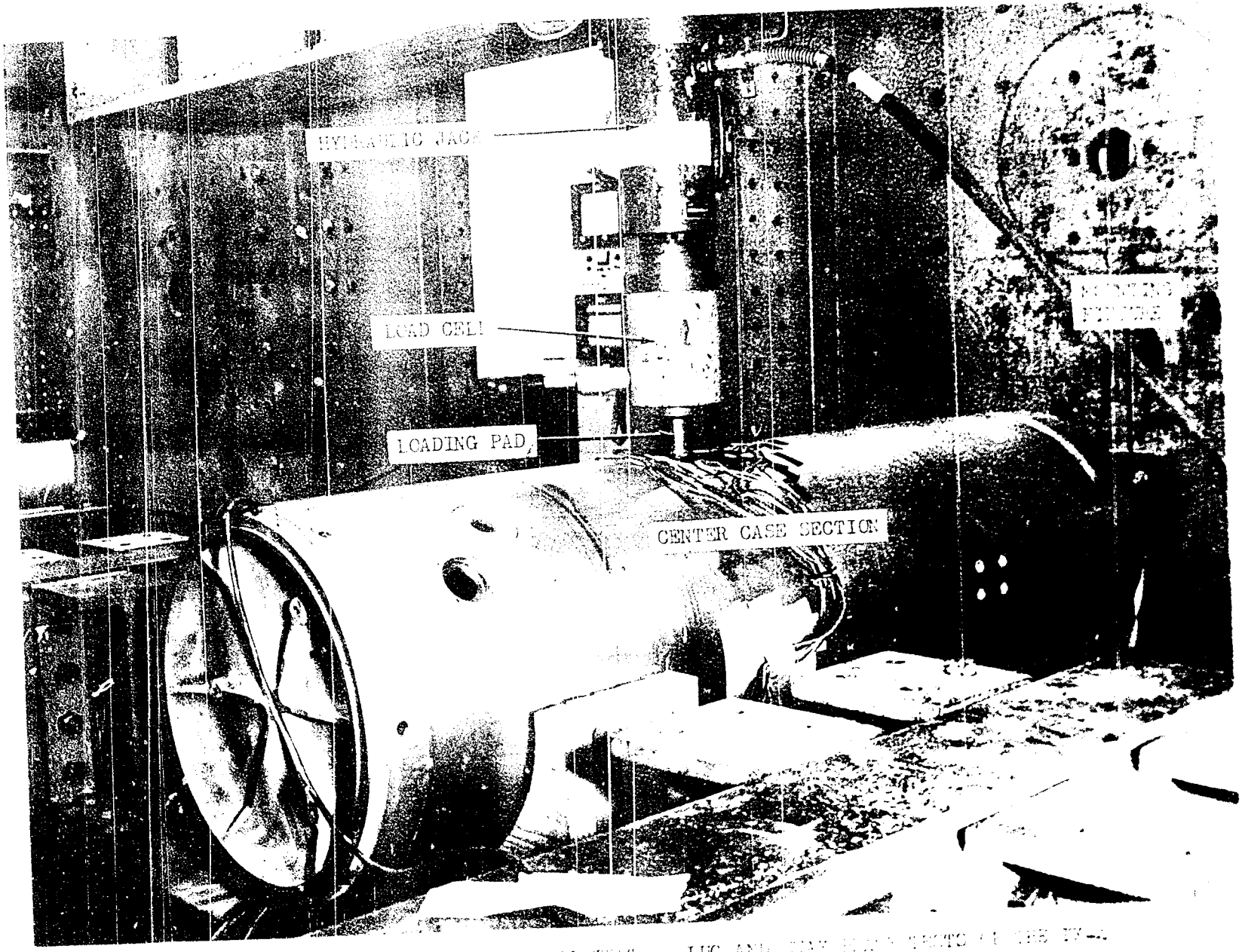

FIG. [illegible] — [illegible] WAY BRACE LOAD TEST — LUG AND [illegible] TESTS [illegible]

T-17615

UNCLASSIFIED

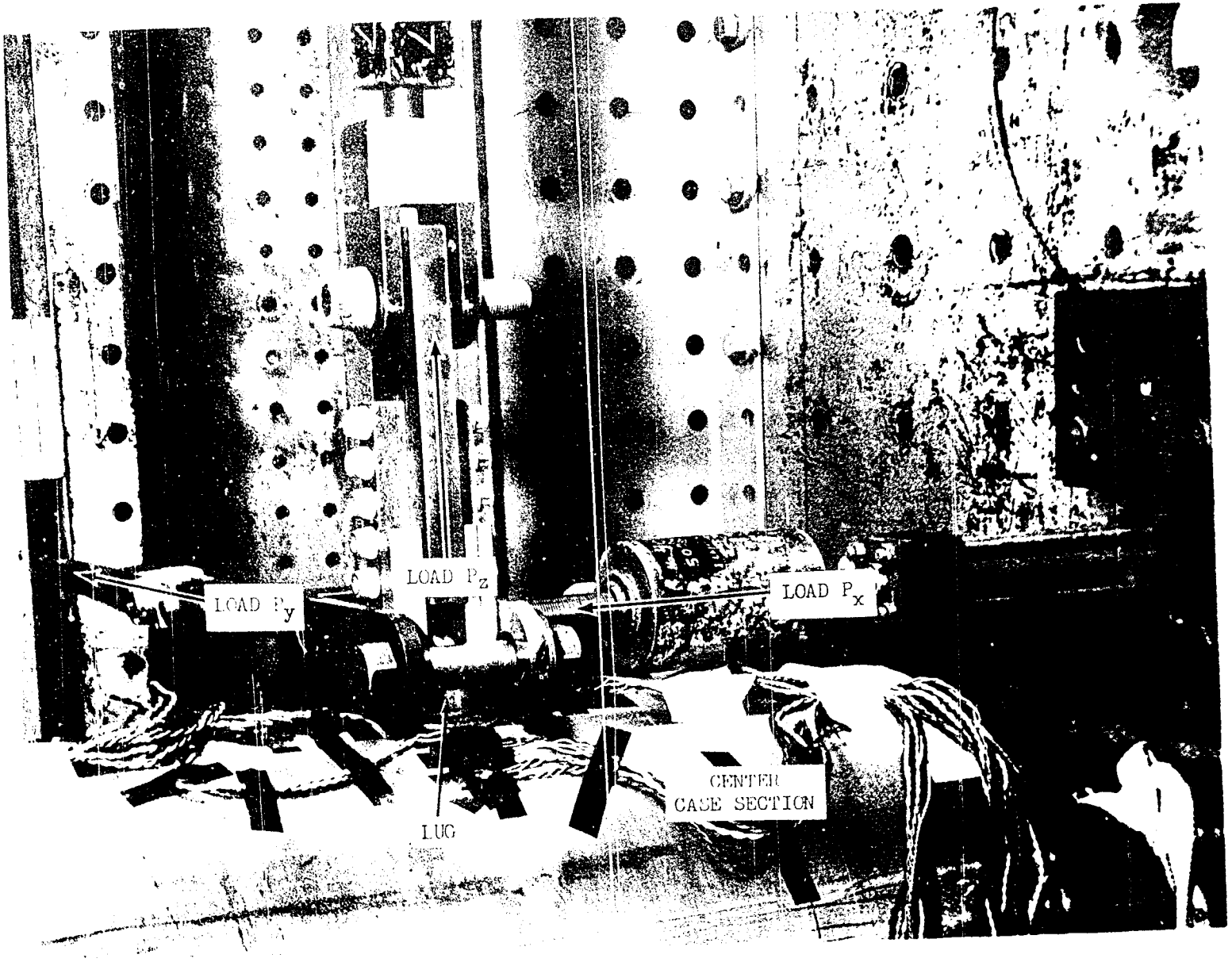

FIG. 4 - SETUP FOR LUG TEST -- LUG AND SWAY BRACE TESTS OF THE TX-43.

T-17615

UNCLASSIFIED

UNCLASSIFIED

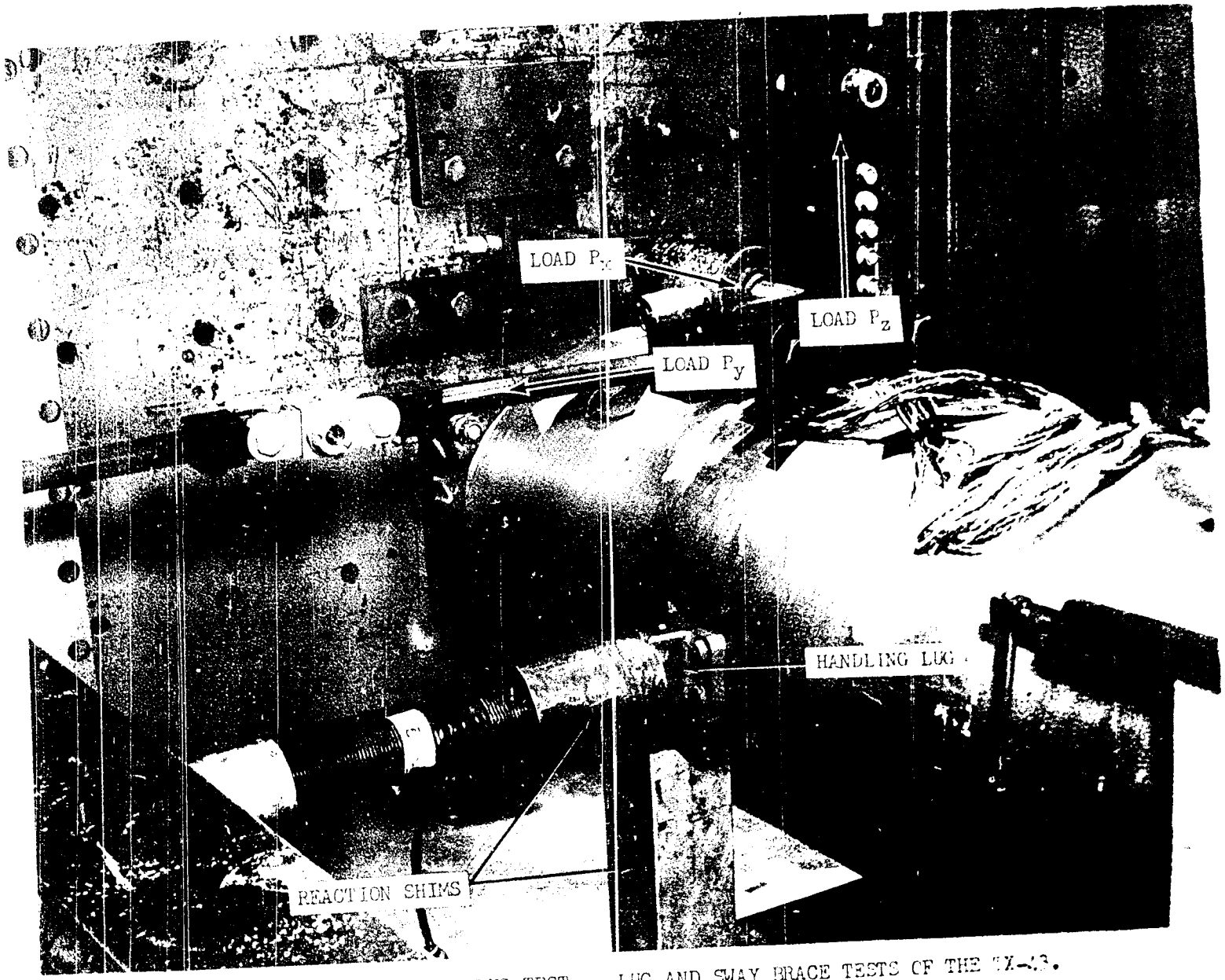

FIG. 5 - SETUP FOR LUG TEST — LUG AND SWAY BRACE TESTS OF THE TX-43.

T-17615

DC 17922

UNCLASSIFIED

UNCLASSIFIED

[redacted]

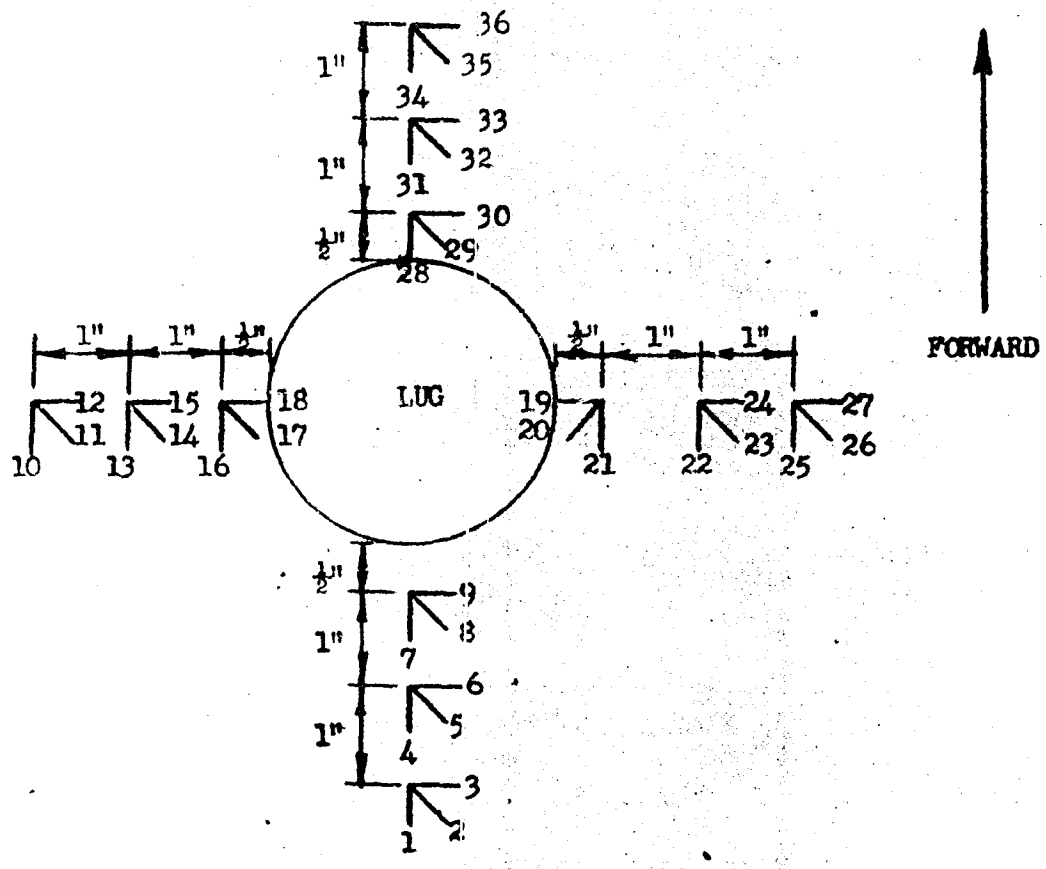

FIG. 6 - STRAIN GAGE PATTERN ON OUTSIDE OF CASE, LUG TEST — LUG AND SWAY BRACE TESTS OF TX-43.

T-17615

UNCLASSIFIED

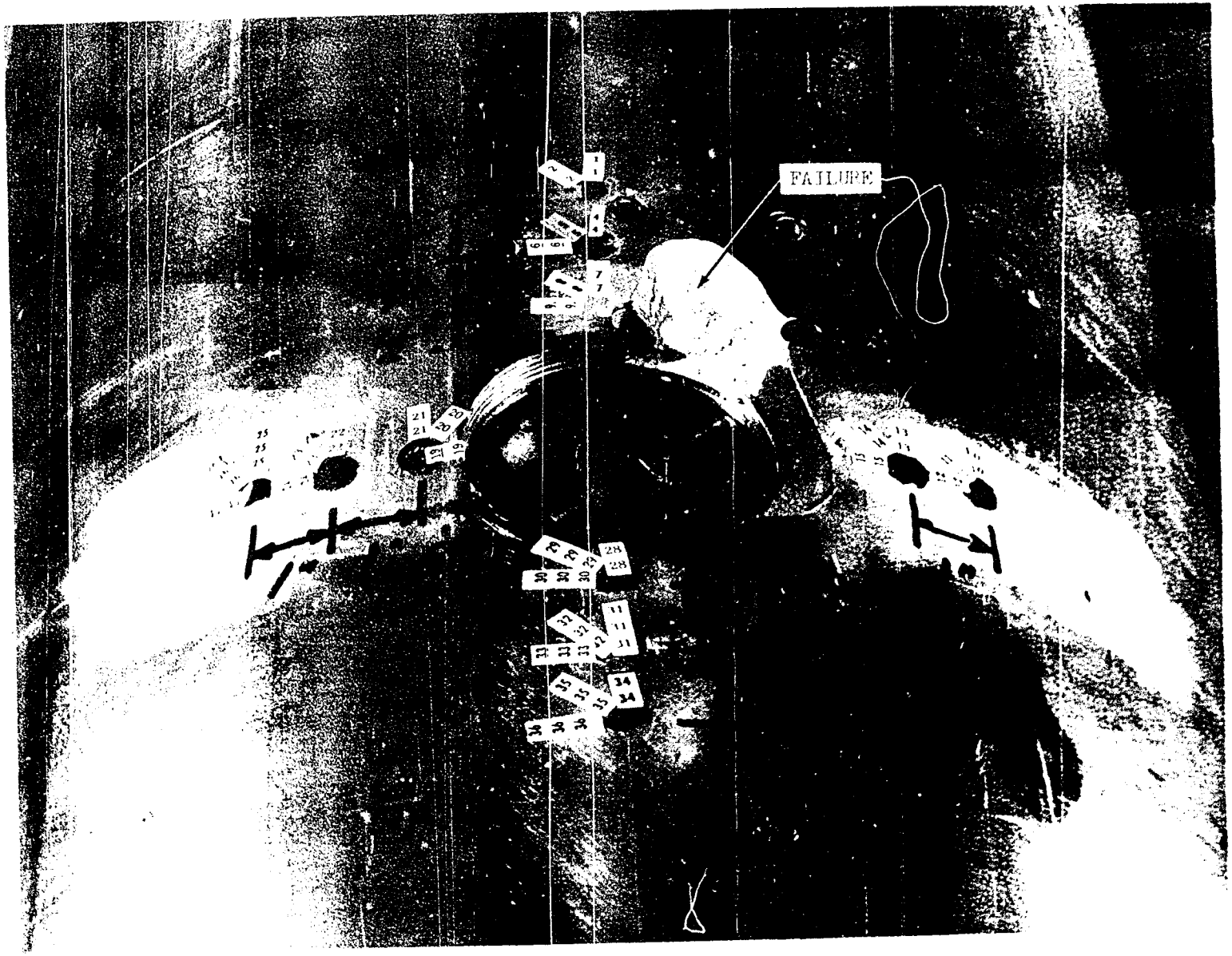

FIG. 7 - LOCATIONS OF STRAIN GAGES AND FAILURE AREA IN LUG TEST (PHOTO TAKEN AFTER TEST) — LUG AND SWAY BRACE TESTS OF THE IX-[illegible].

T-17[illegible]

UNCLASSIFIED

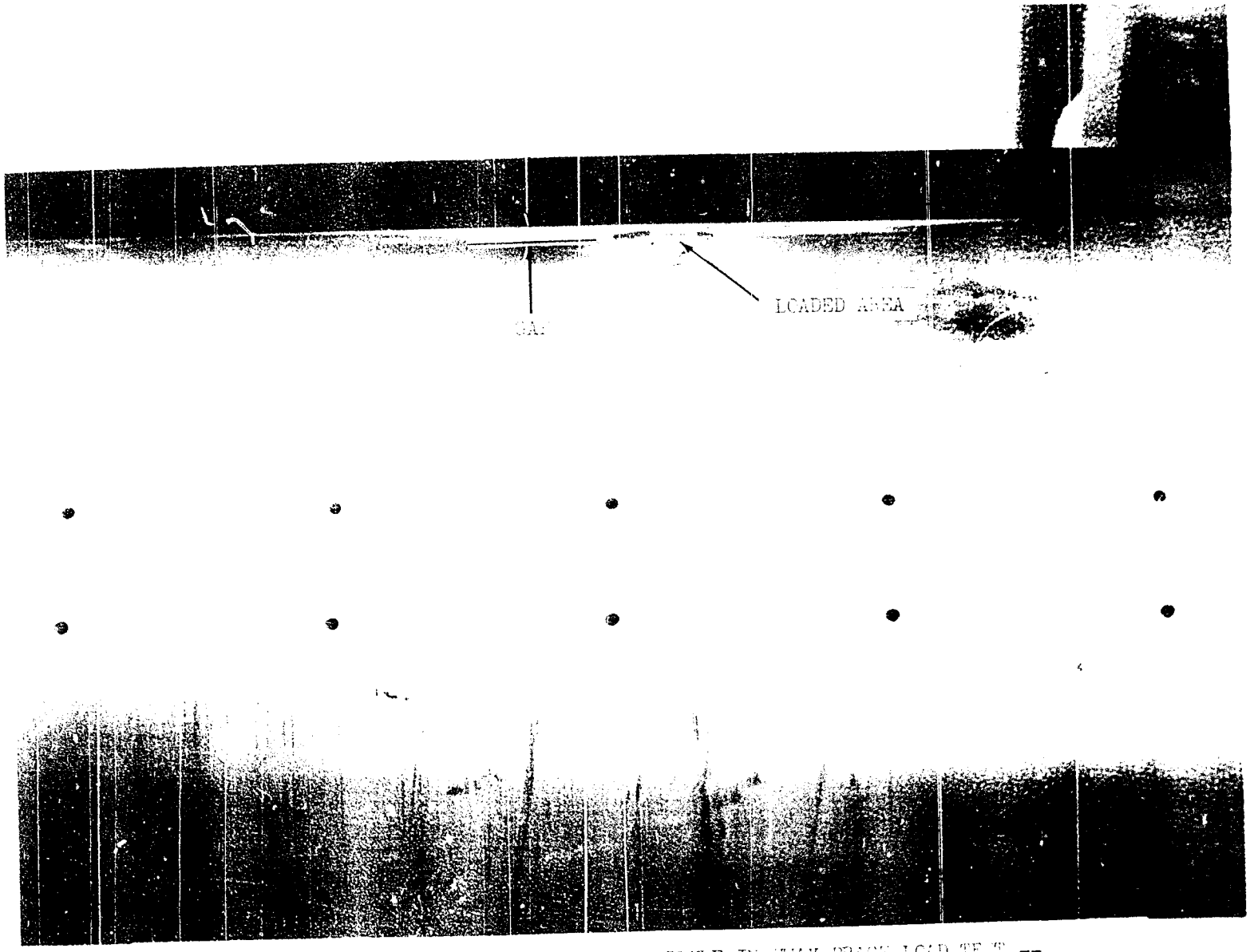

[illegible] OF CASE FAILURE IN SWAY BRACE LOAD TEST -- [illegible] BRACE TESTS OF THE TX-43.

D61-7924

T-17615

UNCLASSIFIED

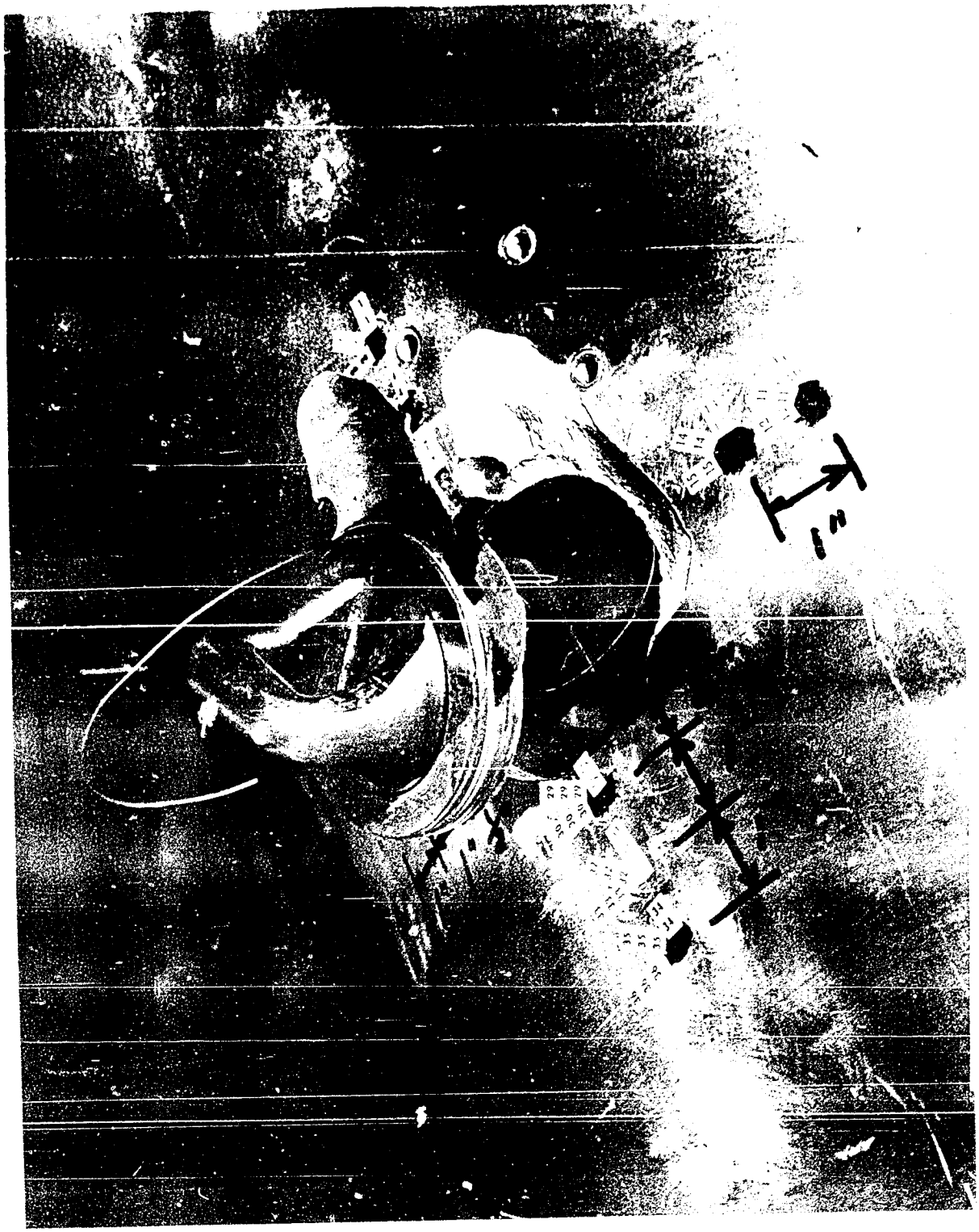

[redacted]

T-17613

TABLE I

Limit Loads and List of Loading Equipment
TX-43 Lug and Sway-Brace Tests

	Sway-Brace Test Load	Lug Test Loads		
		Px	Py	Pz
Limit Load - Yield Test (pounds)	47,500	2,250	10,500	40,300
Limit Load - Ultimate Test (pounds)	49,000	2,330	10,900	41,600
Load Cell No.	100-675	4,888	5	7
Load Cell Capacity (pounds)	100,000	5,000	20,000	80,000
Indicator No.	391905	391905	391903	175441

[redacted]

TABLE II

Strain Gage Readings (microinches/inch)
Sway-Brace Test
Lug and Sway-Brace Tests of the TX-43

Rosette No.	1			2			3			4			5			6			7			8		
Strain Gage Element No.	1	2	3	4	5	6	7	8	9	10	11	12	13	14	15	16	17	18	19	20	21	22	23	24
0	56	-72	-184	224	137	175	Gage	227	700	6	631	1050	314	775	1280	-66	972	337	-259	131	680	303	239	[illegible]
20	115	-137	-322	659	369	362	Out	657	1450	25	1280	2210	668	1620	2680	-130	2010	717	-534	280	1,410	635	693	[illegible]
30	169	-190	-493	730	563	550	-	850	2100	20	1860	3160	1000	2390	3850	-170	2930	1030	-770	420	2,070	920	740	[illegible]
40	233	-260	-653	910	749	750	-	1040	2780	30	2450	4150	1400	3210	5100	-210	3880	1360	-1030	550	2,750	1250	1020	[illegible]
50	300	-320	-823	1250	990	970	-	1280	3530	0	3110	5300	1920	4270	6690	-280	4970	1740	-1310	690	3,520	1570	1330	[illegible]
60	369	-370	-943	1340	1200	950	-	1590	4270	-30	3780	6440	Gage	Gage	Gage	-420	6150	2100	-1620	830	4,300	1750	1570	[illegible]
70	449	-490	-1113	1970	1353	890	-	2050	5050	-120	4600	7740	Out	Out	Out	-560	7450	2500	-1970	970	5,140	1810	1780	[illegible]
80	549	-630	-1440	2420	1510	880	-	3010	5930	Gage	Gage	Gage	-	-	-	Gage	Gage	Gage	-2360	1080	5,950	1620	1900	[illegible]
90	633	-810	-2310	2360	1850	230	-	3850	7030	Out	Out	Out	-	-	-	Out	Out	Out	-2910	1220	7,080	1240	1970	[illegible]
100	759	-1060	-2690	3310	1740	-440	-	3380	8180	-	-	-	-	-	-	-	-	-	-3600	1370	8,400	620	2040	[illegible]
110	919	-1330	-3430	4910	1973	-1370	-	3820	9630	-	-	-	-	-	-	-	-	-	-4420	1500	9,800	-260	2090	[illegible]
120	1020	-1590	3440	3450	1960	-1590	-	Gage	Gage	-	-	-	-	-	-	-	-	-	-4940	1560	10,640	-880	2140	[illegible]
130	1073	-1710	-4280	5460	2050	-2240	-	Out	Out	-	-	-	-	-	-	-	-	-	-5310	1640	11,380	-1320	2220	[illegible]
140	1213	-2230	-4910	6850	2190	-3340	-	-	-	-	-	-	-	-	-	-	-	-	-6070	1670	12,520	-2360	2240	[illegible]
150	233	-1543	3372	2750	1230	-6260	-	-	-	-	-	-	-	-	-	-	-	-	-3300	-90	4,460	-7020	-2260	[illegible]
160	133	-1450	-2500	2330	-1540	-6270	-	-	-	-	-	-	-	-	-	-	-	-	-2940	-240	3,580	-7170	-2560	[illegible]

Rosette No.	9			10			11			12			13			14			15		
Strain Gage Element No.	31	32	33	34	35	36	37	38	39	40	41	42	43	44	45	46	47	48	49	50	51
10	Gage	[illegible]	93	-163	-195	-213	-508	-557	-492	-983	-589	-251	562	-493	-487	-160	-175	-213	-1,030	-656	-325
20	Out	-13	183	-340	-437	-442	-1150	-1120	-990	-2,010	-1200	-514	-1170	-1020	-1,000	-360	-391	-455	-2,140	-1350	-670
30	-	-10	270	-500	-590	-640	-1700	-1660	-1,460	-2,920	-1730	-740	-1740	-1500	-1,440	-490	-530	-640	-3,070	-1920	-930
40		0	340	-650	-800	-870	-2280	-2220	-1,970	-3,890	-2320	-980	-2300	-2000	-1,920	-660	-740	-880	-4,080	-2540	-1210
50		0	[illegible]	830	1030	-1160	-2880	-2840	-2,580	-5,050	-3000	-1230	-2870	-2570	-2,530	-820	-960	-1130	-5,270	-3230	-1440
60		0	550	960	1230	-1470	-3300	-3360	-3,220	-6,310	-3680	-1400	-3300	-3050	-3,130	-950	-1170	-1400	-6,580	-3930	-1630
70		20	670	1080	1420	1700	-3600	-3880	-3,940	-7,870	-4490	-1620	-3580	-3490	-3,840	-1000	-1340	-1660	-8,120	-4730	-1790
80		40	810	1070	-1590	-2020	-3740	-4370	-4,790	-9,750	-5480	-1910	-3710	-3890	-4,660	-1000	-1490	-1980	-10,000	-5760	-2060
90		-183	960	-970	-1500	-2440	-3910	-5080	-6,000	-12,260	-6780	-2330	-3870	-4380	-5,840	-850	-1650	-2440	-12,740	-7220	-2400
100	-	-310	1170	-680	-1930	-2900	-3990	-5820	-7,360	-15,040	-8190	-2490	-4070	-5020	-7,300	-600	-1780	-2930	Gage	Gage	Gage
110	-	-520	[illegible]	250	-2220	-3560	-4330	-6890	-9,180	-16,460	-6920	-1240	-4290	-5790	-9,120	-140	-1880	-3570	Out	Out	Out
120	-	-810	[illegible]	60	-2150	3920	-4330	-7380	-10,140	-18,120	-7240	-790	-4370	-6250	-10,180	220	-1920	-3980	-	-	-
130	-	-750	1700	340	-2240	-4210	-4450	-7950	-11,140	-19,440	-7310	-330	-4470	-6670	-11,200	490	-1980	-4360	-	-	-
140	-	-930	1920	930	-2340	-4920	-4430	-8320	-12,340	-21,120	-7270	Gage	-4440	-7270	-12,820	1140	-2020	-5000	-	-	-
150	-	-1250	410	2770	530	-1410	2720	-1050	-4,910	-11,060	-3020	Out	2640	-390	-5,280	2820	650	-1310	-	-	-
160	-	-1290	290	2490	760	-870	3240	-380	-4,060	-9,790	-2550	-	3160	240	-4,450	2950	900	-960	-	-	-

TABLE III

Strain Gage Readings (microinches/inch)
Lug Test
Lug and Sway-Brace Tests of the TX-43

Percent Limit Load	Rosette No. 1			2			3			4			5			6		
	Strain Gage Element No.																	
	1	2	3	4	5	6	7	8	9	10	11	12	13	14	15	16	17	18
10	Gage	51	94	-106	72	272	-258	55	537	79	7	-73	152	45	-77	118	287	-125
20	Out	103	191	-229	136	555	-569	87	1110	179	20	-161	348	103	-185	242	684	-389
30	-	146	277	-337	204	839	-869	118	1680	284	38	-245	557	172	-288	403	1100	-640
40	-	202	383	-461	267	1120	-1200	134	2270	393	58	-328	764	235	-394	547	1540	-898
50	-	248	480	-582	329	1410	-1540	130	2880	496	76	-410	970	297	-502	681	1960	-1160
60	-	290	560	-710	390	1700	-1870	120	3510	600	80	-510	1190	360	-620	850	2420	-1430
70	-	330	660	-830	440	1970	-2220	110	4120	710	100	-590	1410	420	-730	1010	2870	-1670
80	-	380	750	-950	510	2250	-2550	80	4730	820	120	-680	1620	480	-840	1160	3340	-1940
90	-	430	850	-1070	570	2540	-2880	20	5320	930	140	-770	1840	540	-960	1330	3810	-2200
100	-	470	940	-1200	630	2840	-3210	-50	5870	1040	150	-860	2060	610	-1080	1490	4270	-2440
110	-	510	1050	-1340	690	3130	-3550	-150	6410	1140	160	-950	2290	670	-1200	1650	4730	-2720
115	-	530	1080	-1400	710	3260	-3740	-200	6670	1200	170	-1010	2400	710	-1260	1760	4970	-2840

	Rosette No. 7			8			9			10			11			12		
	Strain Gage Element No.																	
	19	20	21	22	23	24	25	26	27	28	29	30	31	32	33	34	35	36
10	-184	205	501	219	70	-86	76	9	-88	-167	158	518	-102	39	259	-62	35	1[illegible]4
20	-425	428	1050	468	145	-187	169	22	-183	-361	325	1050	-214	85	545	-118	79	333
30	-676	665	1650	730	225	-287	264	40	-277	-560	503	1620	-327	134	830	-180	125	505
40	-930	873	2200	976	303	-385	353	58	-366	-748	678	2150	-435	187	1100	-231	170	674
50	-1190	1080	2790	1220	388	-486	445	73	-458	-942	848	2680	-547	234	1360	-290	212	837
60	-1460	1310	3370	1460	440	-600	530	60	-550	-1150	1030	3230	-660	280	1640	-340	250	1000
70	-1720	1520	3930	1710	520	-710	620	90	-630	-1350	1220	3760	-770	340	1920	-400	310	1160
80	-2020	1710	4430	1950	590	-810	710	100	-750	-1570	1390	4300	-900	390	2190	-460	360	1330
90	-2330	1880	5040	2190	650	-940	790	110	-840	-1780	1560	4850	-1020	440	2470	-520	410	1500
100	-2640	2050	5580	2420	720	-1060	870	120	-950	-2020	1740	5410	-1140	490	2750	-570	450	1640
110	-2950	2200	6080	2660	780	-1190	960	120	-1060	-2300	1910	6000	-1290	550	3050	-650	480	1830
115	-3070	2260	6300	2760	800	-1250	1000	130	-1110	-2440	1990	6270	-1360	560	3190	-680	510	1920

UNCLASSIFIED

UNCLASSIFIED

TABLE IV

Principal Stresses (psi)
Sway Brace Load Test
Lug and Sway Brace Tests of TX-43

Percent Design Load	Rosette 1 Gages 1 Su	2 Sv	3 Theta	Rosette 2 Gages 4 Su	5 Sv	6 Theta	Rosette 4 Gages 10 Su	11 Sv	12 Theta	Rosette 5 Gages 13 Su	14 Sv	15 Theta	Rosette 6 Gages 16 Su	17 Sv	18 Theta	Rosette 7 Gages 19 Su	20 Sv	21 Theta	[illegible] Gages 22 Su	23 Sv	[illegible]
10	35	-1695	5	3286	2863	14	12246	3986	96	16006	8498	89	8763	-4597	128	6933	-461	85	4835	[illegible]	[illegible]
20	125	-3307	4	6806	5615	20	25754	8604	94	33555	17912	88	18238	-9214	128	14379	-912	85	10057	[illegible]	[illegible]
30	-6	5067	2	10676	8999	17	36810	12075	95	48345	26212	89	26571	-13350	128	21160	-1176	85	14556	[illegible]	[illegible]
40	213	-6666	3	14408	12187	18	48364	15893	95	64327	35595	89	35212	-17533	128	28090	-1660	85	19698	[illegible]	[illegible]
50	376	-8369	3	18495	15632	20	61619	19856	95	Yielding			45061	-22617	128	36011	-2037	85	25655	[illegible]	[illegible]
60	222	-10675	2	21944	16949	6	Yielding						55283	-29457	128	43918	-2720	85	30821	[illegible]	[illegible]
[illegible]	[illegible]	-13494	2	26221	17745	4							66603	-36780	128	52375	-3644	85	36296	[illegible]	[illegible]
[illegible]	20	-16940	2	30510	16838	1							Yielding			60326	-5138	85	42263	[illegible]	[illegible]
90	-605	-21686	2	28623	11192	171										Yielding			50867	[illegible]	[illegible]
100	-1540	-28283	1	42406	9400	179													59956	[illegible]	[illegible]
110	-2520	-36220	1	50459	2423	179														Yielding	
115	-3047	-44380	2	55644	-2301	178															
120	-3570	-44546	2	59195	-4161	178															
125	-4646	-52233	2	66679	-12721	178															
130	-9340	-54779	2	8182	-62140	177															
140	-9232	-53966	2	3266	-63834	177															

	Rosette 10 Gages 28 Su	29 Sv	30 Theta	Rosette 11 Gages 31 Su	32 Sv	33 Theta	Rosette 12 Gages 34 Su	35 Sv	36 Theta	Rosette 13 Gages 37 Su	38 Sv	39 Theta	Rosette 14 Gages 40 Su	41 Sv	42 Theta	Rosette 15 Gages 43 Su	44 Sv	45 Theta
10	-2654	-3096	10	-7706	-8509	72	-6635	-12335	92	6368	-5215	23	-2643	-3091	168	-7073	-13157	92
20	-5596	-6426	9	-15716	-17181	74	-13573	-25227	92	-15849	-17510	109	-5874	-6655	170	-15876	-27321	92
30	-8497	-9325	8	-23169	-25409	73	-19647	-36617	92	-23084	-25801	105	-8043	-9328	167	-22415	-39076	92
40	-11151	-12676	7	-31256	-34078	74	-26101	-48764	92	-30732	-34141	105	-10952	-12722	172	-29490	-51831	92
50	-13986	-16605	6	-40523	-43412	72	-33402	-63139	92	-39845	-43168	109	-13779	-16197	177	-36676	-64474	92
60	-16723	-20171	4	-49279	-50951	56	Yielding			-47982	-50864	121	-16316	-19810	179	Yielding		
70	-18711	-23718	4	-56383	-59527	16				-55049	-59017	150	-17882	-23009	1			
80	-20047	-27455	3	-6.408	-69721	6				-59994	-68676	164	-19101	-26709				
90	-20457	-31964	4	Yielding						Yielding			-19116	-31460				
100	-18631	-36203	4										-18087	-36178				
110	-16364	-42205	3										-15200	-41832				
115	-14125	-45213	3										-12594	-45207	1			
120	-12225	-46340	3										-10916	-48576	1			
125	-7602	-53535	3										-5825	-53516	1			
10	26721	-5814	2										27659	-4446	1			
0	30251	802	4										30492	100	1			

Notes:

Su is the algebraic maximum principal stress; Sv is the algebraic minimum principal stress.
Unsigned numbers are tensile stresses; (-) sign indicates compressive stresses.
Theta is the angle, in degrees, from the axis of the lowest numbered gage in the rosette to the direction of Su, measured clockwise.

UNCLASSIFIED

TABLE V

Principal Stresses (psi)
Lug Test
Lug and Sway Brace Tests of TX-43

T-17615

0.224

Percent Design Ultimate Load	Rosette 2 Gages 4 Su	5 Sv	6 Theta	Rosette 3 Gages 7 Su	8 Sv	9 Theta	Rosette 4 Gages 10 Su	11 Sv	12 Theta	Rosette 5 Gages 13 Su	14 Sv	15 Theta	Rosette 6 Gages 16 Su	17 Sv	18 Theta	Rosette 7 Gages 19 Su	20 Sv	21 Theta
10	2746	-194	88	5299	-1011	84	637	-545	178	1467	-314	178	2391	-2498	146	5120	[illegible]	[illegible]
20	5556	-545	88	10830	-2513	84	1461	-1184	178	3329	-823	178	5241	-7501	146	10595	[illegible]	[illegible]
30	[illegible]	-721	88	16377	-3910	84	2358	-1759	178	5361	-1225	177	8468	-12112	147	16621	[illegible]	[illegible]
40	11222	-1094	88	22049	-5601	83	3305	-2306	178	7356	-1668	178	11754	-17149	146	22051	[illegible]	[illegible]
50	14125	-1396	88	27962	-7363	83	4187	-2865	178	9332	-2138	178	14629	-22193	146	27500	[illegible]	[illegible]
60	17000	-1775	88	34155	-8974	83	5009	-3626	178	11431	-2669	178	18367	-27283	146	33832	[illegible]	[illegible]
70	9674	-2155	87	40964	-10856	83	5978	-4134	178	13557	-3104	178	21861	-32007	146	39154	[illegible]	[illegible]
80	22462	-2477	87	46884	-12571	82	6912	-4760	178	15570	-3579	178	25364	-37354	146	44414	[illegible]	[illegible]
90	25571	-2773	87	51921	-14412	82	7845	-5386	178	17661	-4133	178	29005	-42379	146	49722	[illegible]	[illegible]
100	28357	-3146	87	57265	-16394	82	8774	-6007	178	19757	-4692	178	32518	-47430	146	54833	[illegible]	[illegible]
110	31183	-3666	87	62545	-18579	81	9589	-6568	178	21960	-5204	178	36031	-52480	146	59456	[illegible]	[illegible]
115	32466	-3873	87	64948	-19906	81	10059	-7138	178	23011	-5487	178	36002	-54911	146	61542	[illegible]	[illegible]

Percent Design Ultimate Load	Rosette 8 Gages 22 Su	23 Sv	24 Theta	Rosette 9 Gages 25 Su	26 Sv	27 Theta	Rosette 10 Gages 28 Su	29 Sv	30 Theta	Rosette 11 Gages 31 Su	32 Sv	33 Theta	Rosette 12 Gages 34 Su	35 Sv	36 Theta
10	2237	-162	179	555	-739	175	5360	35	89	2641	-228	84	1670	-102	86
20	4733	-383	180	1277	-1492	175	10775	-183	89	5556	-468	84	3437	-112	86
30	7353	-543	180	2031	-2231	175	16612	-317	89	8449	-717	84	5173	-177	87
40	9826	-741	180	2736	-2936	175	22027	-475	90	11176	-953	85	6941	-131	87
50	12266	-963	179	3459	-3659	175	27420	-702	90	13772	-1274	85	8605	-196	87
60	14607	-1387	180	4074	-4381	176	32990	-1015	90	16608	-1543	85	10312	-166	87
70	17082	-1709	180	4766	-5227	175	38361	-1312	90	19440	-1761	85	11922	-238	87
80	19477	-1953	180	5436	-6051	175	43771	-1803	90	22072	-2242	85	13660	-286	88
90	21760	-2544	180	6029	-6798	175	49334	-2140	90	24872	-2582	85	15398	-333	88
100	23966	-3059	179	6556	-7788	175	54901	-2787	90	27672	-2922	85	17066	-310	88
110	26248	-3650	179	7183	-8720	175	60662	-3783	90	30569	-3513	86	18735	-595	87
115	27176	-3964	179	7470	-9161	175	63254	-4377	90	31942	-3810	86	19660	-598	88

Notes:

Su is the algebraic maximum principal stress; Sv is the algebraic minimum principal stress.
Unsigned numbers are tensile stresses; (-) sign indicates compressive stresses.
Theta is the angle, in degrees, from the axis of the lowest numbered gage in the rosette to the direction of Su, measured clockwise.

UNCLASSIFIED

UNCLASSIFIED