000808

C. 56

RS 3466 (27181)

SC 1004-A (3-53)

[redacted]

UNCLASSIFIED

[redacted]

W.O. # 442610

[redacted]

[redacted]

SANDIA SYSTEMATIC DECLASSIFICATION REVIEW
1st Review Date: 12/4/97
Authority: ADC
Name: R B Cramer
2nd Review Date: 2/09/98
Authority: ADD
Name: W Layne
Determination (Circle Number):
Classification Retained
Classification Changed to: UNCL
Contains No DOE Classified Information
Coordinate With:
Contains UCAI?
Comments: DECLASSIFY

[redacted]

INVENTORIED

MAR 1 1966

SCTM 34-59(51)

3428-3

SUMMARY OF RESEARCH ROCKET PROGRAMS

Harold Vaughn - 5141

INVENTORIED

MAR 8 1965

3427-1

ABSTRACT

A descriptive schedule of all Research Rocket Programs is presented for planning purposes. It also indicates the variety of rocket vehicles that can be made available for research projects.

[redacted]

INVENTORIED

AUG 1 1963

3427-1

SANDIA SYSTEMATIC DECLASSIFICATION REVIEW
DOWNGRADING OR DECLASSIFICATION STAMP

CLASSIFICATION CHANGED TO: U	AUTHORITY: W C Layne
Emelda Selph 2/9/98	RECORD ID: 98SN1542
PERSON CHANGING MARKING & DATE	
W C Layne 2/10/98	DATED: 2/9/98
PERSON VERIFYING MARKING & DATE	

[redacted]

Case No. 409.10

Inventoried September 1968

FEB 6 1959

[redacted]

UNCLASSIFIED

DISTRIBUTION:

1/56A G. A. Fowler, 5000
2/56A E. H. Draper, 1200
3/56A L. A. Hopkins, 1400
4/56A B. S. Biggs, 1600
5/56A C. F. Quate, 5100
6/56A R. A. Bice, 5200
7/56A W. J. Howard, 8100
8/56A D. R. Cotter, 1240
9/56A L. D. Smith, 1260
10/56A R. H. Schultz, 1280
11/56A H. E. Lenander, 1450
12/56A J. I. Hegge, 1470
13/56A M. L. Merritt, 5110
14/56A W. W. Pledsoe, 5120
15/56A G. E. Hansche, 5130
16/56A A. Y. Pope, 5140
17/56A R. S. Claassen, 5150
18/56A A. P. Gruer, 5210
19/56A J. C. Eckhart, 5220
20/56A D. B. Shuster, 5230
21/56A W. T. Moffat, 5240
22/56A H. H. Patterson, 5250
23/56A W. C. Scrivner, 8150
24/56A T. B. Cook, 5111
25/56A C. D. Broyles, 5113
26-27/56A H. R. Vaughn, 5141
28/56A R. C. Maydew, 5142
29/56A K. F. Crowder, 5143
30/56A W. H. Curry, 5144
31/56A A. E. Bentz, 5213
32/56A R. S. Millican, 5214
33/56A B. C. Benjamin, 5216
34/56A G. W. Rollosson, 5221
35/56A H. B. Austin, 5222
36/56A R. C. Spence, 5223
37/56A R. N. Browne, 5224
38/56A C. B. McCampbell, 5232
39/56A J. S. Miller, 5251
40/56A A. J. Max, 5253
41/56A W. T. Smith, 5256
42/56A L. Gutierrez, 8141
43/56A R. E. Dewhurst, 8233
44/56A M. G. Randle, 4721-2
45/56A R. K. Smeltzer, Central Record File, 4721-3
46/56A W. F. Carstens, 4723
47-56/56A T. F. Lonz, 4761-1

INTRODUCTION

This summary of rocket programs is presented as an aid to planning in the 5000 Organization, particularly with regard to manpower, financial and test range requirements. It may further be useful in familiarizing the Research Organizations with the presently available test vehicles and also the vehicles that can be available through modification if there is sufficient need.

A summary of each of the programs is given in outline form followed by a sketch of the vehicle and a sample trajectory when possible. A schedule, manpower summary and a cost estimate for all of the programs are included after the individual program outlines. The schedule through 1959, with the exception of the Tumbleweed Warhead Carrier (TWC), should be reasonably accurate. In 1960 the programs that are shown are relatively firm with the exception of the Tumbleweed programs. In addition, in 1960 it is to be expected that the Mach 5 Test Vehicle (M5TV) will be replaced by a smaller, higher Mach number barometric fuzing test vehicle, that the Chaff rocket will be converted to a high altitude density, pressure, or temperature measuring rocket, and that the Supersonic Parachute Test Vehicle (SPTV) will be boosted to higher Mach numbers by the use of a cluster of three Nike boosters. New programs, such as measuring the radiation from high-speed pellets which have been fired from a gas gun that is boosted to high altitudes and velocities by the Hypersonic Test Vehicle (HTV) (i.e., under consideration for proposal to ARPA), will undoubtedly materialize in 1960.

The conclusions to be drawn from this summary are that the present rocket vehicle work load is large and will likely increase in 1959 and 1960. One must also conclude that the requirements for instrument development, range facilities, data reduction, and other supporting activities must increase greatly in 1959 if the programs are to continue. Further, the manpower situation in 5140, and in particular in 5141, may become critical in mid-1959.

I. MACH FIVE TEST VEHICLE - M5TV

A. STATUS - Definite. Most of the hardware has been either ordered or received. Program for 5141-1 and Diamond Ordnance Fuse Laboratories.

B. SCHEDULE - Six air launched M5TV's (B-52, B-36) have been fired and one air launched round remains. The remaining 20 rounds are to be ground launched for operational reasons. Four of the ground launched vehicles have already been successfully fired. The schedule will continue at the rate of two rounds per month.

C. PURPOSE - To obtain calibration data on probes, for supersonic barometric fuzing and to aid in development of supersonic fuzing devices. Secondary investigations include base drag, aerodynamic heating, boundary layer characteristics, temperature fuzing, stability and component testing where practical.

D. DESCRIPTION - The ground launched M5TV consists of a second stage which weighs 970 pounds and is powered by a Thiokol X-M17 engine specially designed for the purpose, and a first stage powered by a NIKE 1 engine which boosts the second stage to an altitude of about 52,000 feet. The second stage is allowed to free fall from the 52,000 foot apogee to about 40,000 feet where it is ignited and a terminal Mach number of about 5 is achieved at approximately 27,000 feet. The nose section presently accommodates 18 channels of telemetering, which allows elaborate instrumentation.

E. COST -

Total Program	Amount	Case
30 XM-17	$ 431,900	DOFL
30 Noses	5,500	DOFL, 5140
30 Instrumentation	300,000	5250
30 Fins (sets of 4)	93,000	DOFL, 5140
29 Center Sections	7,000	5140
30 Telemetering Bulkheads	18,000	
25 M5 JATO (NIKE-AJAX)	63,000	5140
26 Fins (sets of 3, NIKE)	11,000	5140
26 Interstage Adapters		
1 Fin Gage	18,000	DOFL
1 Launcher	35,000	5140
30 Probes	30,000	DOFL, 5140
	$1,042,400	

5140 Fiscal 1959 Expenditure Required to Complete Program

Committed	25 Center Sections	$ 5,900
	23 Nose	10,000
	15 Telemetry Bulkheads	9,000
	26 Interstage Adapters	30,000
	2 Sets Titanium Fins	4,800
	7 MC-620 Probes	6,000
	2 Cylindrical Boattail	800
	16 Sets Steel Fins	38,000
	22 Sets Booster Fins	10,000
	5 Stubby Probes	2,500
		$117,000

F. TEST RANGE & INSTRUMENTATION - Tonopah Test Range - Tracking with an accuracy of 50 feet or better is an absolute requirement. Optical tracking is generally preferred because of its inherent accuracy, however, MIDOT or equivalent is required as a back-up system. Standard telemetering system and transducers in use are adequate.

G. MANPOWER -

5141-1	-	1 Man full time or equivalent
5143	-	1 Man 1/4 time
5240	-	(Data Reduction)
5250	-	1 Man full time
		2 Men 1/2 time

[redacted]

UNCLASSIFIED

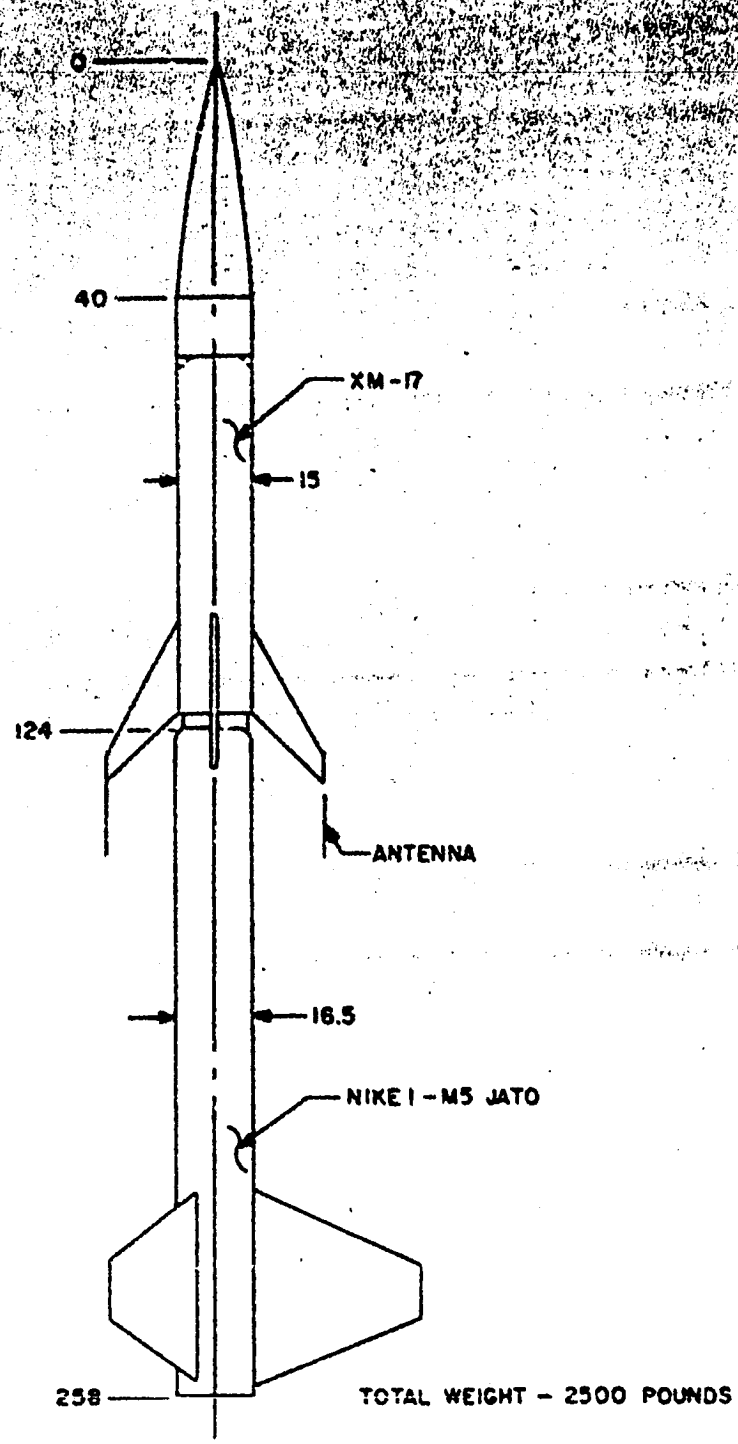

MACH FIVE TEST VEHICLE (M5TV)

UNCLASSIFIED

[redacted]

[redacted]

UNCLASSIFIED

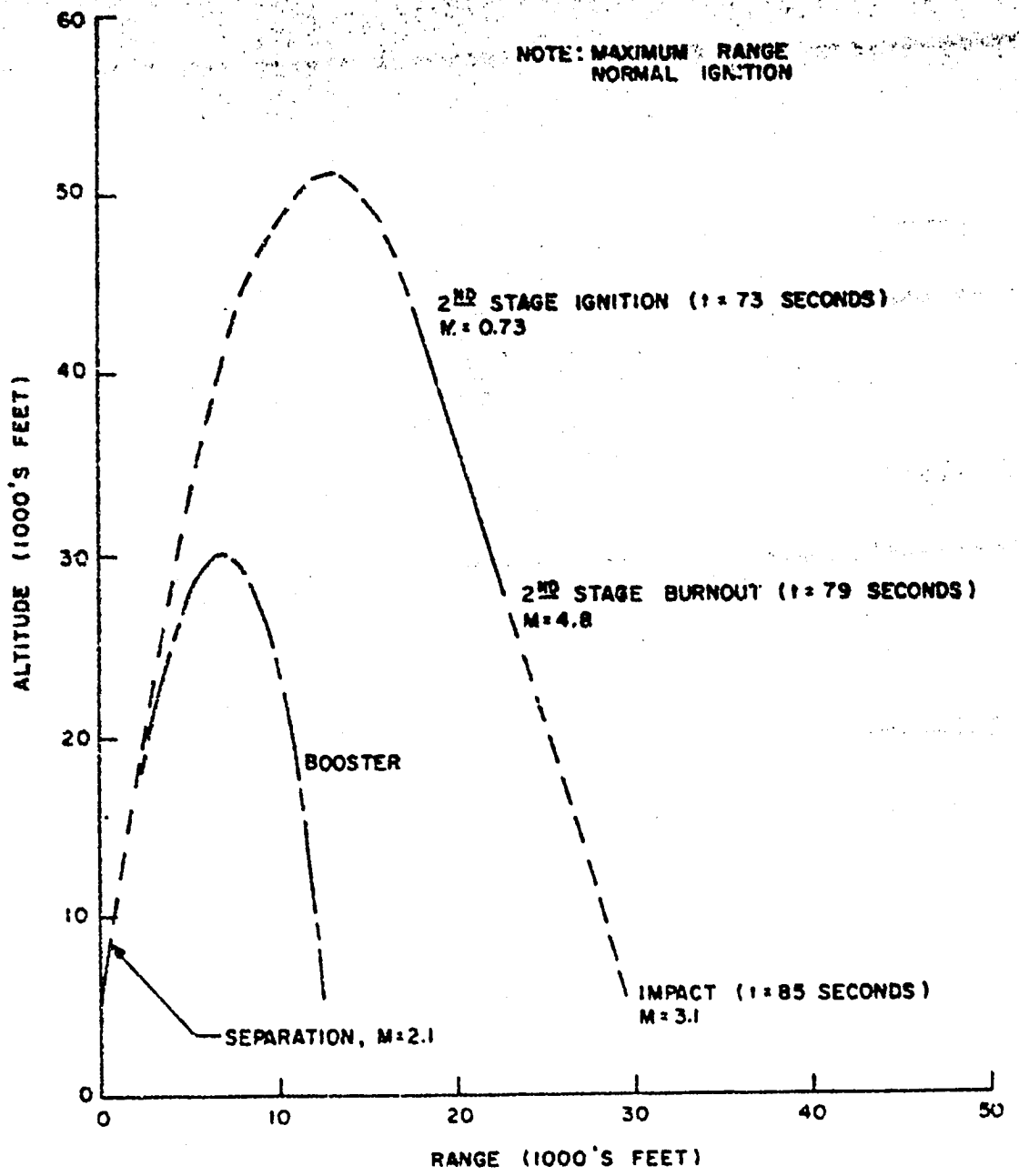

TYPICAL TRAJECTORY FOR TWO-STAGE MACH-FIVE TEST VEHICLE

UNCLASSIFIED

[redacted]

II. CHAFF ROCKETS - RW

A. STATUS - Definite. Most of the hardware has been either ordered or already received. Program is principally for 5110 but is of value to 5141.

B. SCHEDULE - Firings at the rate of 4 per month for a period of one year were started in November.

C. PURPOSE - To obtain data on wind velocity and direction on a long term basis in the 150,000 to 300,000 feet altitude range. Data of this nature is of interest in weather phenomena as well as in high altitude rocketry.

D. DESCRIPTION - A two stage device consisting of a Deacon first stage which burns for three seconds where separation occurs and then the Arrow second stage coasts to about 50,000 feet where it is ignited. The Arrow burns out in 1.9 seconds with a Mach number of around 5 and coasts to an apogee altitude of about 380,000 feet. The S band chaff can be ejected at any altitude up to about 350,000 feet where it is tracked by radar as it descends to provide information on wind velocity and direction. Since development was completed 35 consecutive successful rounds have been fired.

E. COST -

50 Deacon Rockets at $1,000 each	=	$ 50,000
50 Arrow, II Rockets at $500 each	=	25,000
50 Sets of Hardware at $1,400 each	=	70,000
1 Launcher at $1,000	=	1,000
		$146,000

5110 has budgeted $150,000 (Case 407.00) in Fiscal 1959 for the program.

F. TEST RANGE AND INSTRUMENTATION - Tonopah Test Range - SC 584 radar only.

G. MANPOWER -
5141-1 - 1 Man 1/4 time
5143 - 1 Man 1/2 time
5250 - 2 Man 1/4 time
5110 - 1 Man (analysis and reporting of wind data)

[redacted]

UNCLASSIFIED

000816

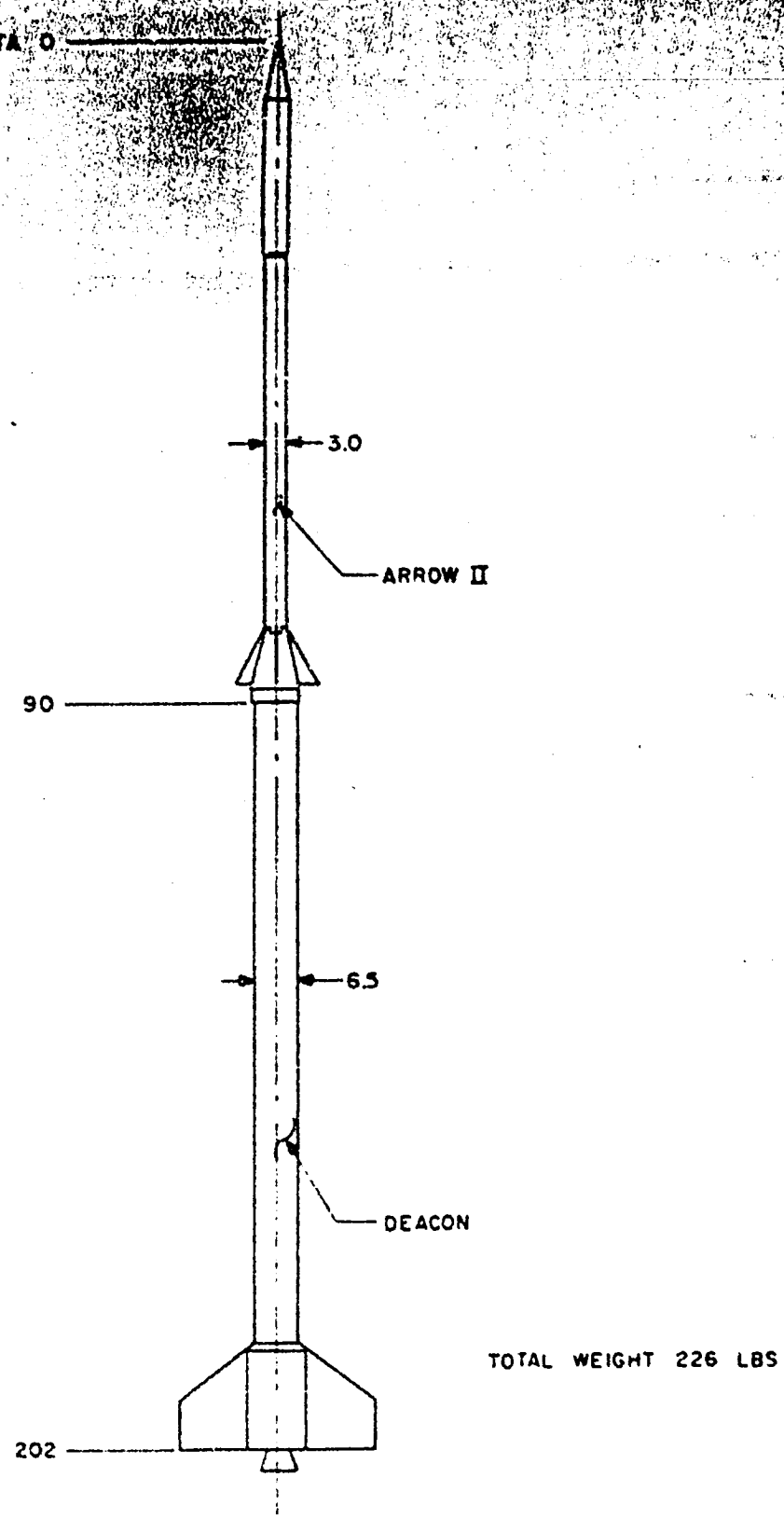

TOTAL WEIGHT 226 LBS

CHAFF ROCKET

UNCLASSIFIED

[redacted]

[redacted]

UNCLASSIFIED

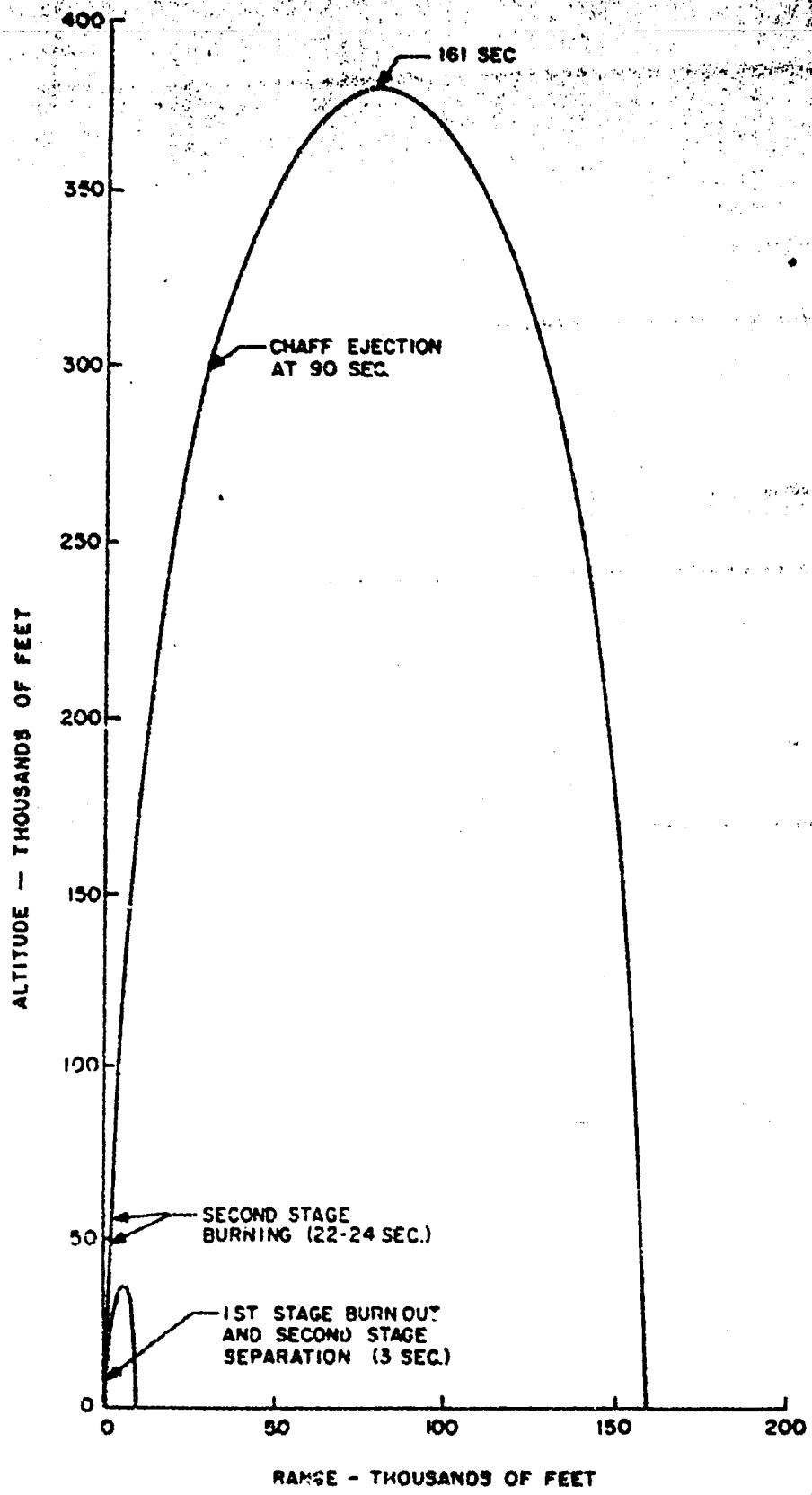

UNCLASSIFIED

CHAFF ROCKET TRAJECTORY

[redacted]

III. SUPERSONIC PARACHUTE TEST VEHICLE - SPTV

A. STATUS - Definite. NIKE 1 boosters have been delivered. NIKE booster fins are useable and will effect large cost reduction. Forebody is being designed by 5143 and should be ready shortly. Launcher is designed.

B. SCHEDULE - Ground launch firings should start in January 1959. Firings should proceed at 1 per month for at least 24 months.

C. PURPOSE - To investigate the performance of parachute or other drag devices at Mach number of from 1.5 to 3.5 at low altitudes.

D. DESCRIPTION - The vehicle will be ground launched and boosted to supersonic speeds by from 1 to 3 NIKE motors. Shortly after booster separation the drag device will be deployed from the test vehicle. The vehicle will be recovered by the parachute under test. Launch angles will be 45° or less.

E. COSTS - For first 12 months of operation (Fiscal 1959 Expenditure)

12 - NIKE A	$ 33,000	with fins
10 - Vehicles	80,000	
1 - Launcher	30,000	(used for M5TV also)
5 - Instrumentation	50,000	(Field Test Case)
	$193,000	

F. TEST RANGE AND INSTRUMENTATION - Tonopah Test Range - Tracking with an accuracy of 50 feet or better required. Good optical coverage for observing parachute operation is required. Vehicle must be recovered for re-use. Standard telemetry satisfactory.

G. MANPOWER - 5141-2 - 1 Man full time
- 2 Men 1/2 time
5143 - 1 Man full time
5250 - 1 Man full time
- 1 Man 1/2 time

[redacted] 00081.9

UNCLASSIFIED

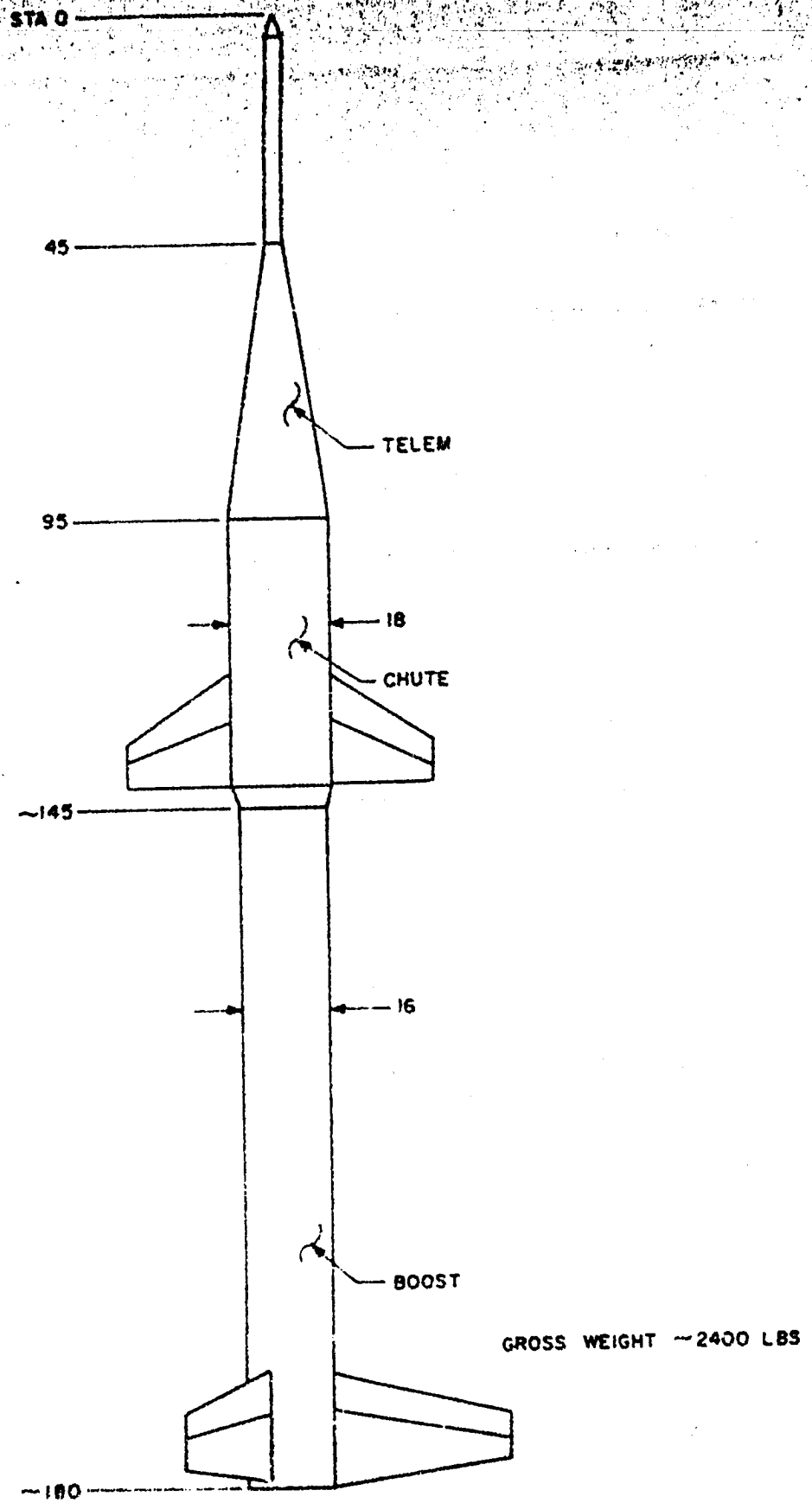

UNCLASSIFIED

SUPERSONIC PARACHUTE VEHICLE

[redacted]

UNCLASSIFIED

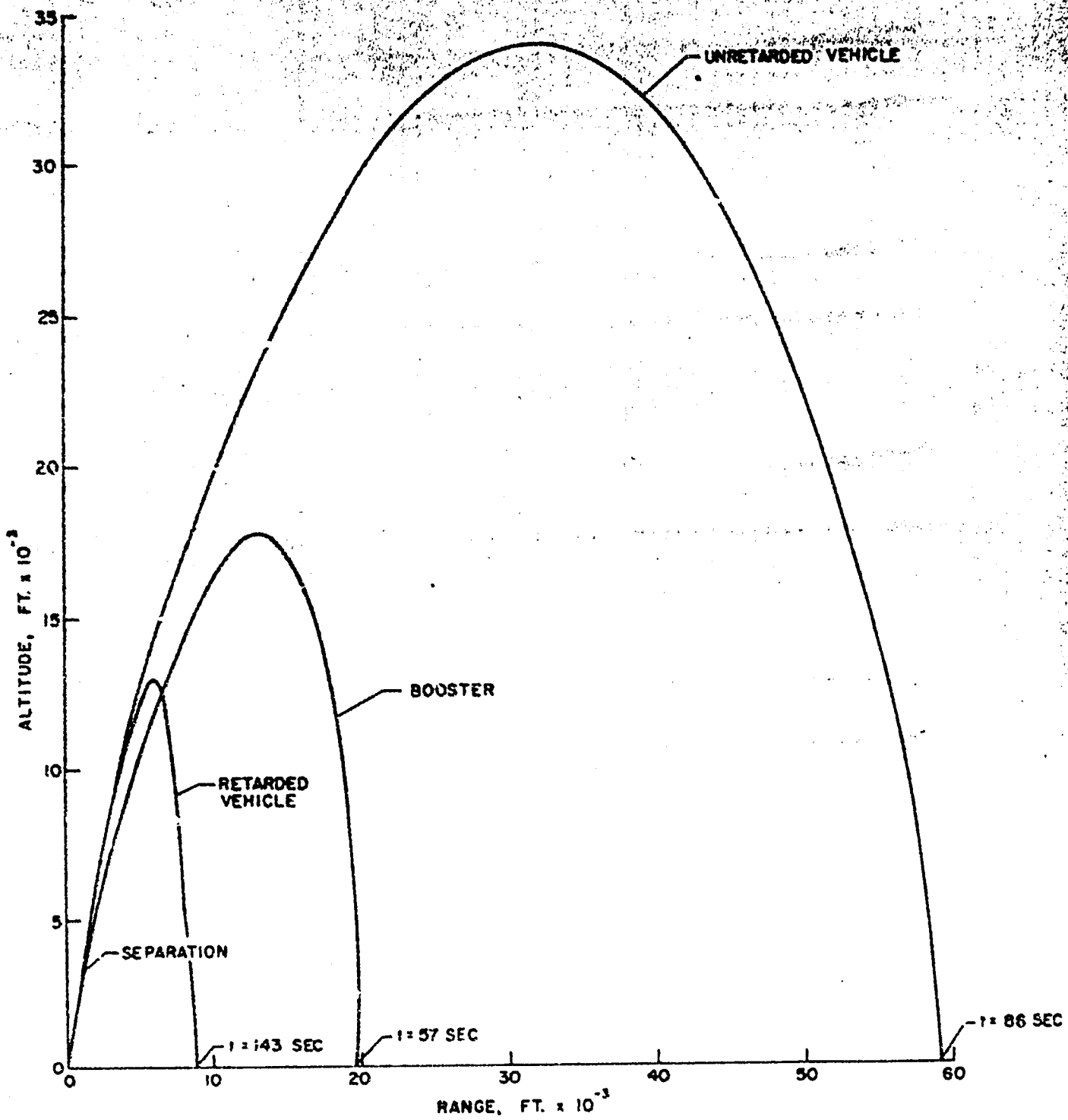

APPROXIMATE SPTV TRAJECTORIES

UNCLASSIFIED

[redacted]

IV. HYPERSONIC TEST VEHICLE - HTV

A. STATUS - Indefinite. Preliminary design and planning started. Basic configuration and trajectory unknown. 5140 program.

B. SCHEDULE - Test flights starting in Fiscal 1960 probably on a bi-monthly basis. Hardware committments may be necessary in Fiscal 1959 to limited extend. Wind tunnel tests scheduled to start in Summer 1959.

C. PURPOSE - Conduct basic research on aerodynamic heating, magneto-aerodynamics and boundary layer characteristics at Mach numbers ranging from 5 to 25.

D. DESCRIPTION - Configuration is nebulous, however, it will have to be multi-staged and large. Possibly similar to Lockheed X-17 with a weight of around 10,000 pounds. Ballistic accuracy is unimportant, therefore, a launcher such as the M5TV launcher is adequate. Recovery of instrumentation will be attempted to minimize cost.

E. COST - 1 Vehicle - $50,000 - 100,000 (It may be possible to utilize launcher from SPTV or M5TV programs).

F. TEST RANGE AND INSTRUMENTATION - Probably can be tested at Tonopah Test Range, however, it may be necessary to test at Pt. Mugu. Tracking is required and it is doubtful that anything but MIDOT or possibly radar is capable of tracking it. Subminiature telemetering transmitting ballistic, temperature, and ablation data on at least 8 channels. High power pulsed DC power supply required for magnetic field studies.

G. MANPOWER - 5141 - 1 Man full time
5143 - 2 Men full time (Design phase)
- 2 Men 1/4 time (Test phase)
5250 - 1 Man full time
- 2 Men 1/4 time

V. TUMBLEWEED INSTRUMENT CARRIER - TIC

A. STATUS - Definite Development Phase (Operational use subject to approval). Preliminary design proceeding. Development hardware procurement should start in January, 1959. Program for 5110 and 5230 use.

B. SCHEDULE - To be ready for operational use by early 1960. Development flight testing to begin in mid-1959 and to continue for approximately six months. First wind tunnel test scheduled for March, 1959.

C. PURPOSE - To provide measurements of fire ball phenomena on high altitude bursts at approximately 370,000 feet (1960).

D. DESCRIPTION - A two stage ballistic vehicle utilizing the XM-10 (Doorknob) motor for a first stage and a 9" diameter Recruit as the second stage which will provide an altitude capability of about 500,000 feet with a 60 pound payload. It will be aimed by making correction for predicted winds and should have an accuracy of 25 mils CPE. The nose will be recovered by a parachute system.

E. COST - Development Phase Only.

10 TX-52	$140,000	
10 Recruits	40,000	
10 Fin Noses, etc.	30,000	
5 Ballistic Instrumentation	50,000	(to be partially recovered)
1 Launcher	25,000	
	$285,000	

F. TEST RANGE AND INSTRUMENTATION - Probably will be fired at Pt. Mugu, although could be fired at Tonopah Test Range in last stages of development. Radar, MIDOT and optical tracking required. Flight instrumentation will require subminiature telemetry with usual rate gyros, thermocouples and accelerometers. Some flights would use the roll stabilized free gyro; particularly in early flights.

G. MANPOWER - 5141 - 1 Man full time
5143 - 1 Man full time
- 1 Man 1/2 time
5230 - 2 Men full time (on loan to 5143)
5250 - 1 Man full time
- 1 Man 1/2 time

[redacted]

UNCLASSIFIED

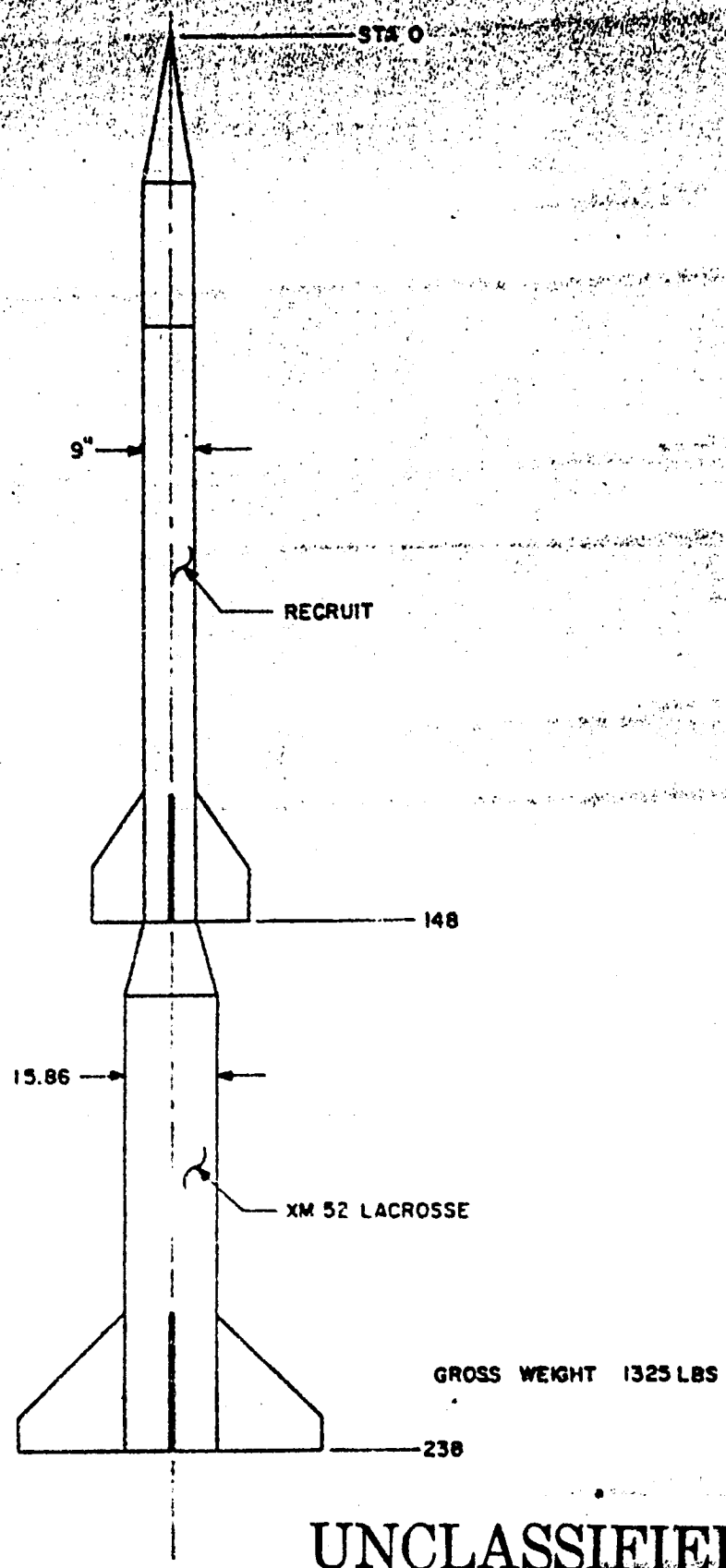

UNCLASSIFIED

TUMBLEWEED INSTRUMENT CARRIER

[redacted]

VI. TUMBLEWEED HIGH ALTITUDE SAMPLER - THAS

A. STATUS - Development Phase Definite (operational phase subject to approval). Program for 5110 and 5230.

B. SCHEDULE - Development will lag instrument carrier by a few months. Should be ready for use in early 1960. Development flight testing to start in Summer 1959 and wind tunnel test scheduled to start in April 1959.

C. PURPOSE - To obtain a radio-chemical sample of high altitude (370,000 feet) bursts. Can also be used for RF attenuation measurements and photography.

D. DESCRIPTION - A method of high altitude sampling that would be successful to any reasonable degree of certainty has not been determined yet. Therefore, the rocket vehicle and sampler nose design is of a nebulous nature. However, it is presently thought that the sampler should be well above the burst altitude (105 km) and possibly as high as 400 km. In view of this a three stage configuration consisting of an Honest John first stage, a second stage consisting of three Recruits in an annular cluster, and a third Recruit that fits inside the cluster as the third stage is being considered. Will require a multi-stage parachute system for nose recovery.

E. COST - Development phase only.

5 Honest Johns	$100,000
20 Recruits	80,000
5 Sets Hardware	50,000
3 Sets Instrumentation	30,000
1 Launcher	25,000
	$285,000

F. TEST RANGE AND INSTRUMENTATION - Will have to be fired at Pt. Mugu. Telemetry will have to be subminiaturized to fit in 9" nose. The usual end instruments such as rate gyros, accelerometers, temperature gages, etc. will be required and in addition the roll stabilized free gyro will be used wherever possible. Electronic and radar tracking throughout the flight is a necessity. Optical tracking is desirable during early part of flight.

G. MANPOWER

5141 - 1 Man full time
5143 - 1 Man full time
1 Man 1/2 time
5230 - 2 Man full time (on loan to 5143)
5250 - 1 Man full time
1 Man 1/2 time

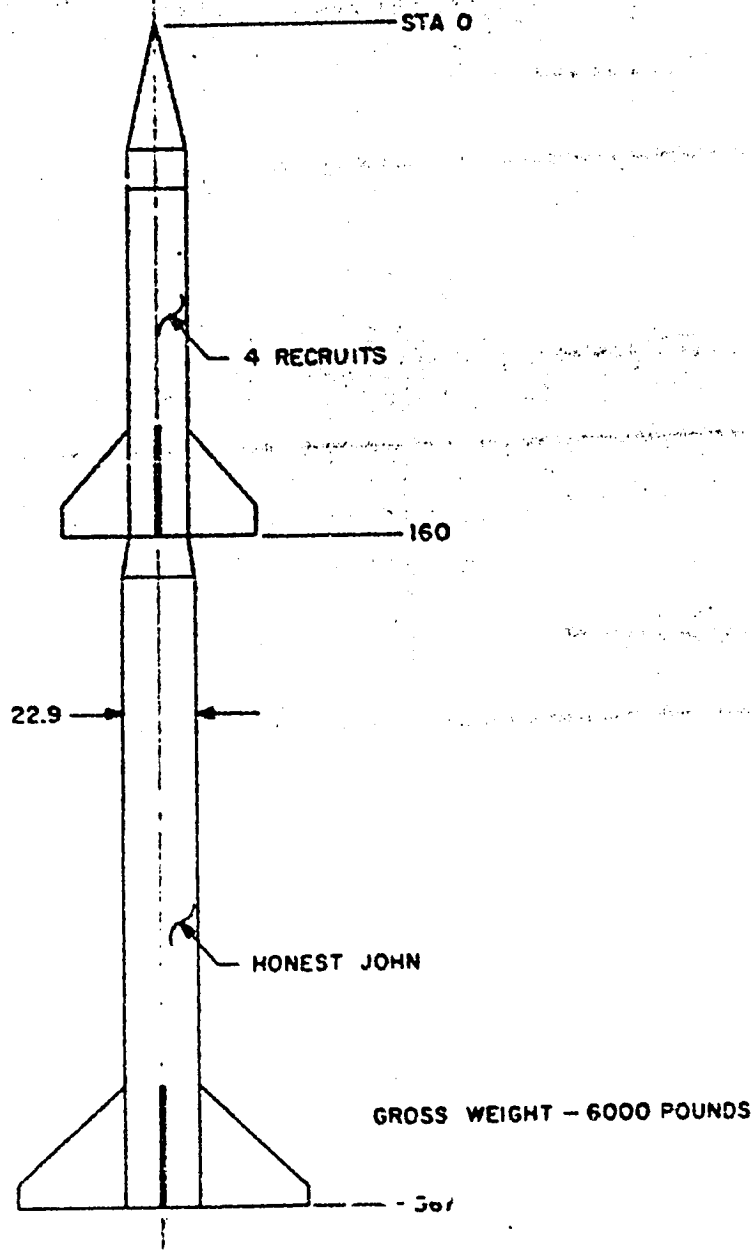

TUMBLEWEED HIGH ALTITUDE SAMPLER

VII. TUMBLEWEED WARHEAD CARRIER - TWC

A. STATUS - Indefinite. Development will be delayed until definite approval is obtained. Program for 5110, 5230 use.

B. SCHEDULE - Unknown, but a test firing schedule of 3 to 6 rounds should start at least 9 months before use.

C. PURPOSE - To carry an atomic warhead in the 2000 pound (megaton) category to an altitude of 105 kilometers in the Tumbleweed test series.

D. DESCRIPTION - Consists of a Sergeant main stage with a cluster of 4 Recruits which will provide enough additional initial acceleration to prevent excessive dispersion from the wind. The Sergeant burns for about 24 seconds and the Recruits burn for about 2 seconds. The complete vehicle is aerodynamically stabilized with the warhead section spin-stabilized to insure consistent warhead orientation after separation from the rockets. Correction for wind effects would be made by computation in the same way that it is accomplished on the Tumbleweed Instrument Carrier. The warhead could be fired with sufficient accuracy with a timer(s) through a safety system of integrating accelerometers, stable platform and R.F. command. The accuracy of the vehicle is on the order of 25 mils CPE, which should be sufficient. This warhead carrier would have the advantages of small size, reliability, unlimited ready time, simplicity and low cost compared to operational liquid fueled military missiles. The TWC is a simplified version of the UAV which is described in the next section.

E. COST - (Per development round)

1 XM-20 (Sergeant)	$40,000
4 Recruits	12,000
Hardware	25,000
Instrumentation (recoverable)	35,000
	$112,000
1 Launcher	35,000

F. MANPOWER

5141 - 1 Man full time
5143 - 2 Men full time
5230 - 2 Men full time (on loan to 5143)
5250 - 2 Men full time
(Warhead Installation)

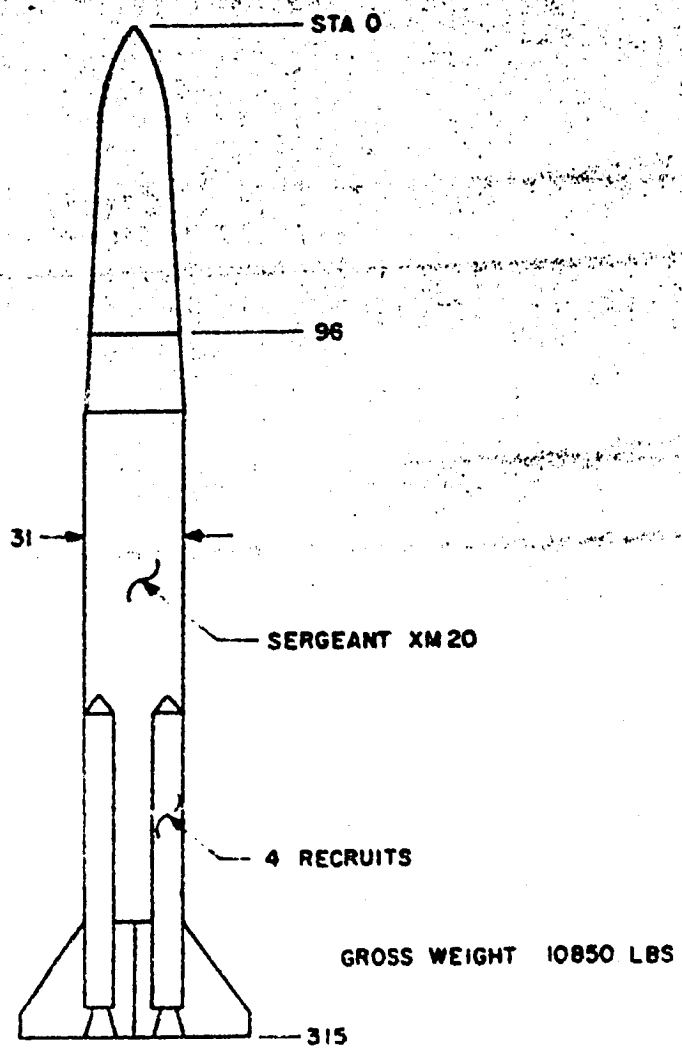

TUMBLEWEED WARHEAD CARRIER

VIII. ULTRA-HIGH ALTITUDE VEHICLE - UAV

A. STATUS - Indefinite. Some preliminary wind tunnel testing has been done. 5141 Research and Development program.

B. SCHEDULE - Indefinite.

C. PURPOSE - Originally was conceived as a carrier for placing warheads, instrument packages, or sampler heads at altitudes ranging from 50 to 1000 miles with a high degree of accuracy and reliability on future high altitude tests. In view of the possibility of accelerated time scales, and changing altitude and accuracy requirements on Tumbleweed Test Series, it was decided to delay the application of the spin stability concept to a later time, with the exception of the warhead section of the Tumbleweed Warhead Carrier. Consequently, the UAV is considered to be a configuration which will be investigated as a spin stabilized vehicle theoretically and in the wind tunnel as a research project. The results of this study would be applied to a small rocket vehicle to test the principle in flight. The UAV could then be developed with a minimum of risk for application to accurate high altitude vehicles including small satellites if required.

D. DESCRIPTION - The first stage consists of a Sergeant XM20 motor with 6 XM 19E 1 Recruits clustered at the base for launch acceleration. The Recruits burn out at 1.6 seconds and are separated. The XM20 burns out at 24 seconds at a high altitude and is separated from the second stage immediately. At this point a recovery system is initiated, designed to recover the stabilized platform mounted in the nose of the XM20 and shortly thereafter the 2nd stage, which can consist of a number of configurations, is ignited. In the configuration shown the 2nd stage is a ring of 9 Viper motors which encloses a third stage of 3 Viper motors. By the choice of motors for the 2nd and 3rd stages extreme flexibility is possible. The UAV is visualized as a spin stabilized ballistic vehicle capable of a high degree of accuracy and wind insensitivity. A rotating launcher is necessary. The gross weight of the UAV shown is about 15000 pounds.

E. COST

1	XM-20 (Sergeant)	$40,000
12	Vipers	22,000
6	XM 19E 1	18,000
	Hardware including safing system and instrumentation	50,000
	TOTAL (1 round)	$130,000
	Launcher	50,000 - 100,000

UNCLASSIFIED

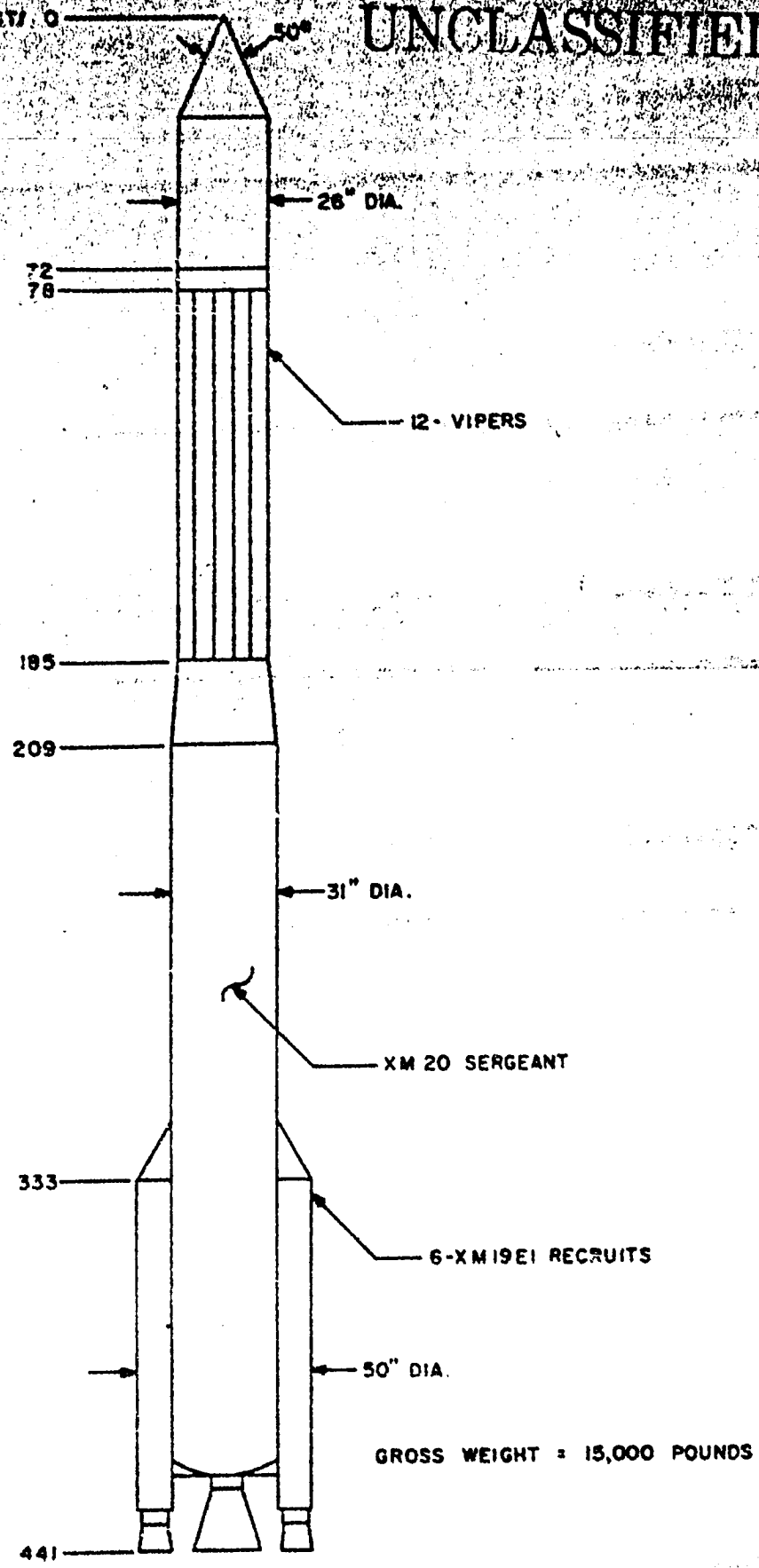

UNCLASSIFIED

ULTRA-HIGH ALTITUDE VEHICLE

[redacted]

IX. LOW-ALTITUDE SAMPLER - LAS

UNCLASSIFIED

A. STATUS - Development is definite but application depends on continuance of nuclear testing at Nevada Test Site. The sampler head design, which has been wind tunnel tested, could be applied to an over-water sampler for use in the Pacific.

B. SCHEDULE - First non-operative test round to be fired in January for ballistic purposes. Three instrumented rounds are scheduled each month for February, March and April. All rounds are to use the Viper motor for maximum performance. Additional test rounds will be needed to test smaller booster rockets for lower altitude operation.

C. PURPOSE - To provide a radio-chemical sample from the fission products in the cloud produced by nuclear test explosions at Nevada Test Site.

D. DESCRIPTION - The maximum altitude (100,000 feet) version consists of a Viper booster motor which burns out in four seconds at a Mach number of 4.5 and the nose section which contains the sampler head, instrumentation, and recovery system. The nose section is separated near apogee after passing through the cloud, and the parachute is deployed for recovery. A wind screen on the sampler head protects the filter from high Mach number environment in the early part of the flight until it is ejected by timer actuation. After collection of the fission products the filter is sealed by the timer after passing through the cloud. The sampler head is designed for 100% internal mass flow at supersonic speeds to prevent fractionization of the particles. The rocket is fired on a near vertical trajectory to insure hitting the rising cloud and is launched from below the surface from a covered bunker to prevent blast damage.

E. COST - (Hardware costs of 10 Round Development Program)

10 Viper Motor	$18,000 (20 available as surplus from Hardtack)
10 Viper Fins	8,000
6 Nose Section	7,000 (Recoverable)
10 Parachute	1,000
6 Instrumentation	30,000 (Recoverable)
1 Launcher	2,000
	$66,000

NOTE: Same launcher, nose sections and instrumentation could be used for testing with smaller booster rocket.

UNCLASSIFIED

F. TEST RANGE AND INSTRUMENTATION - Tonopah Test Range with normal MIDWT, optical and telemetering coverage is satisfactory. Wind rocket launching pad can be used. Special vehicle instrumentation is being developed by 5250 and 5230.

G. MANPOWER

5141 - 1 Man full time
5143 - 2 Men full time
5250 - 2 Men half time
5230 - 1 Man full time (on loan to 5143)

[redacted]

000832

UNCLASSIFIED

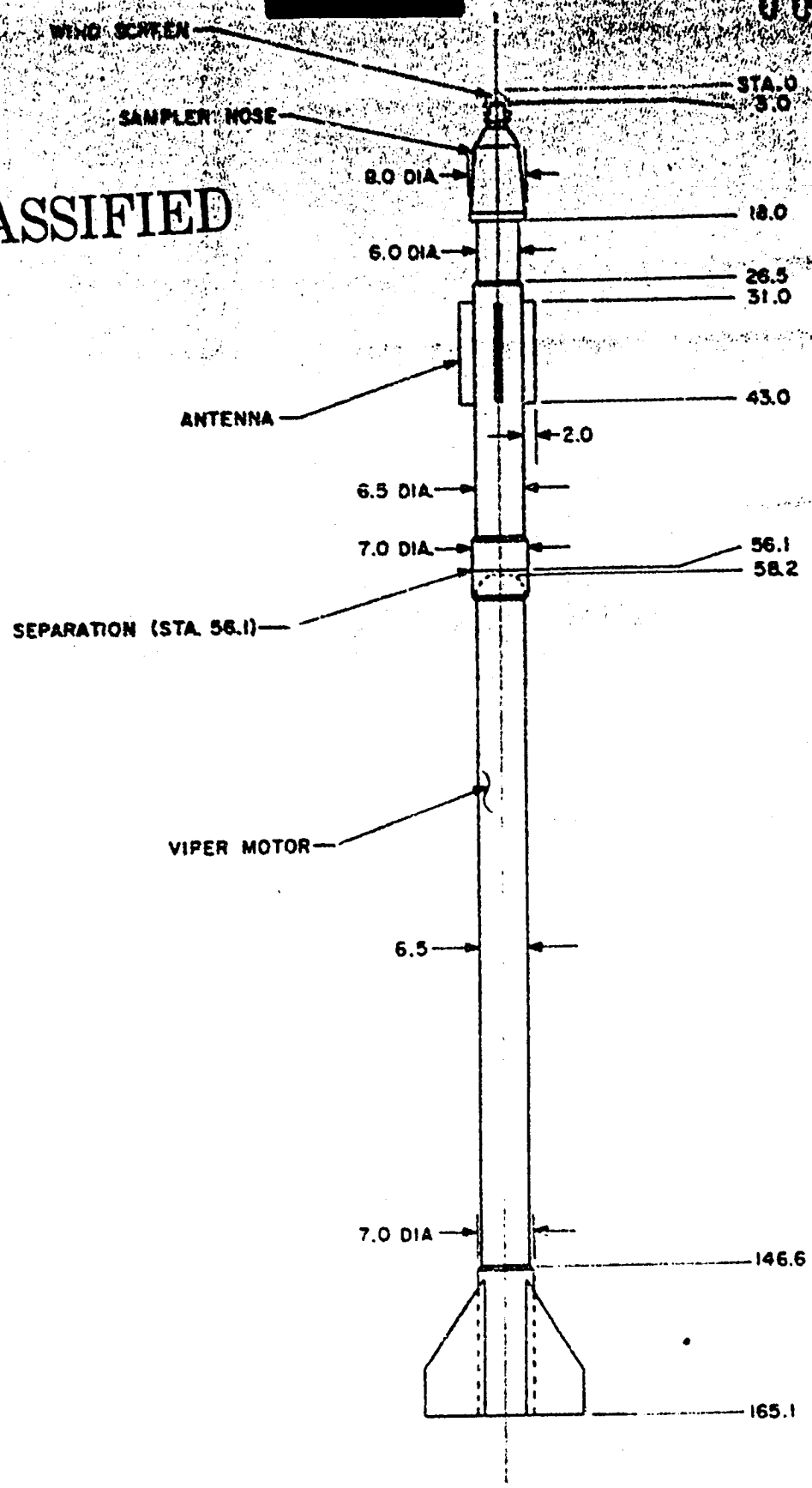

LOW ALTITUDE SAMPLER

UNCLASSIFIED

[redacted]

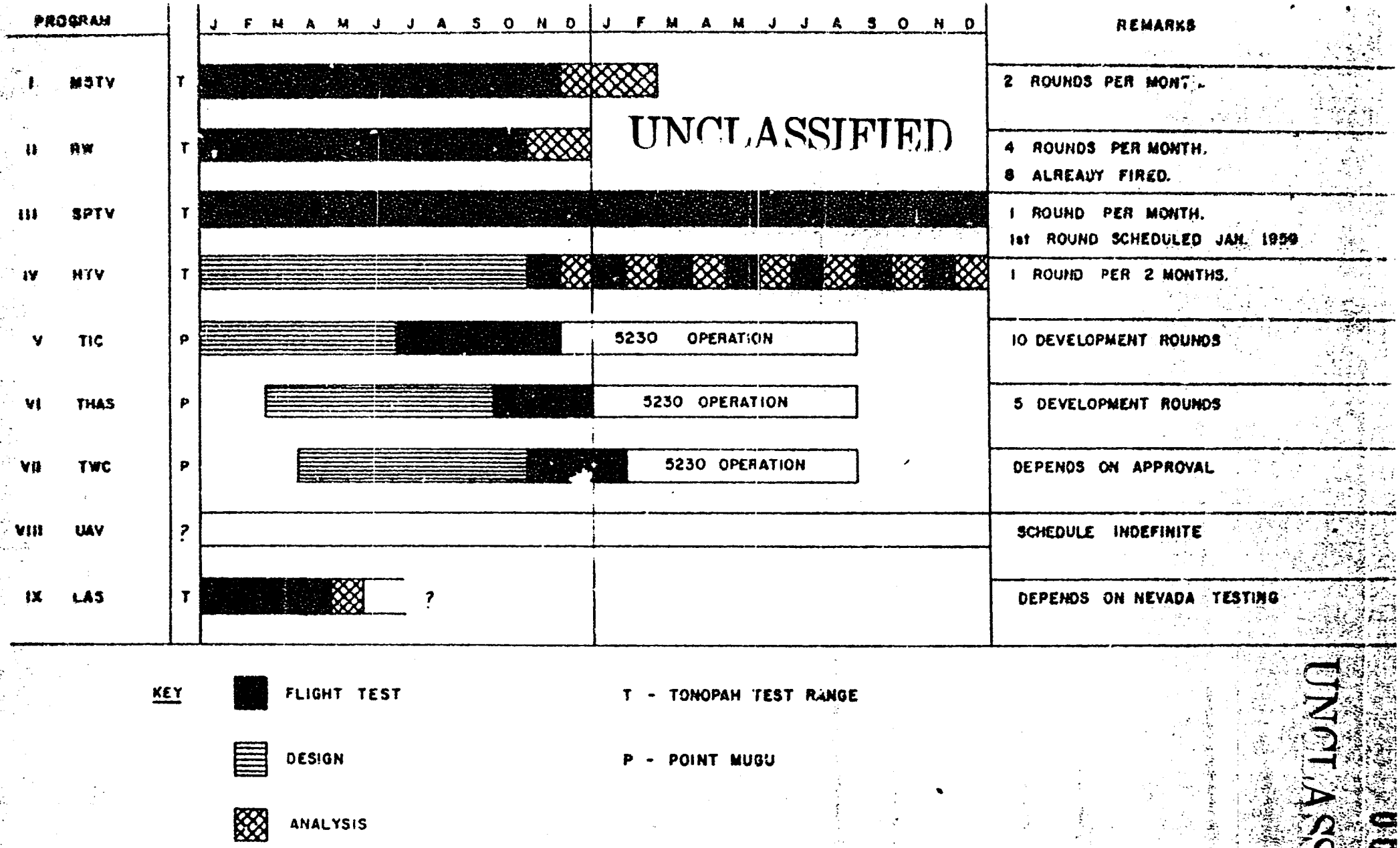

ROCKET VEHICLE SCHEDULE

UNCLASSIFIED [redacted]

UNCLASSIFIED

000838

			J	F	M	A	M	J	J	A	S	O	N	D	J	F	M	A	M	J	J	A	S	O	N	D
I	NSTV	5141	1	1	1	1	1	1	1	1	1	1	1	1	1	1										
		5143	1	1	1	1	1	1	1	1	1	1														
		5250	2	2	1	2	2	2	2	2	2	2	2													
II	RA	5141	1	1	1	1	1	1	1	1	1	1	1	1												
		5143	½	½	½	½	½	½	½	½	½	½														
		5250	½	½	½	½	½	½	½	½	½	½														
III	OPTV	5141	1	1	1	1	1	1	1	1	1	1	1	1	1	1	1	1	1	1	1	1	1	1	1	1
		5143	1	1	1	1	½	½	½	½	½	½	½	½	1	1	1	1	½	½	½	½	½	½	½	½
		5250	1½	1½	1½	1½	1½	1½	1½	1½	1½	1½	1½	1½	1½	1½	1½	1½	1½	1½	1½	1½	1½	1½	1½	1½
IV	HTV	5141	1	1	1	1	1	1	1	1	1	1	1	1	1	1	1	1	1	1	1	1	1	1	1	1
		5143					2	2	2	2	2	2	½	½	½	½	½	½	½	½	½	½	½	½	½	½
		5250								1	1	1	1½	1	1½	1	1½	1	1½	1	1½	1	1½	1	1½	1
V	TIC	5141	1	1	1	1	1	1	1	1	1	1	1	½	½	½	½	½	(½)	(½)	(½)					
		5143	1	1	1	1	1	1	1½	1½	1½	1½	1½						(1)	(1)	(1)					
		5250					1	1	1½	1½	1½	1½	1½													
VI	TMAS	5141		1	1	1	1	1	1	1	1	1	1	1	1	½	½	½	(½)	(½)	(½)					
		5143				1	1	1	1	1½	1½	1½	1½	1½					(1)	(1)	(1)					
		5250					1	1	1	1½	1½	1½	1½	1½												
VII	TAC	5141		1	1	1	1	1	1	1	1	1	1	1	1	1	1	1	(1)	(1)	(1)					
		5143			2	2	2	2	2	2	2	2	2	2	2	2			(2)	(2)	(2)					
		5250						2	2	2	2	2	2	2	2	2										
VIII	UAV	5141	(LOW PRIORITY RESEARCH EFFORT)												(DEVELOPMENT EFFORT DEPENDING ON NEED)											
		5143																								
		5250																								
IX	LAS	5141	1	1	1	1	1																			
		5143	2	2	2	2																				
		5250	1	1	1	1																				
	TOTAL	5141	5	6	7	7	7	6	6	6	6	6	6	6												
		5143	6	6	8	8	7	7	8	8	8	8	6	5												
		5250	5	5	5	5	6	8	9	10	10	10	10	6												

UNCLASSIFIED

NOTE: TABLE DOES NOT INCLUDE MANPOWER REQUIREMENTS FOR INSTRUMENT DEVELOPMENT, DATA REDUCTION AND THE OTHER NECESSARY SUPPORTING FACILITIES. NUMBERS SHOWN ARE IN MAN-MONTH UNITS.

MANPOWER SUMMARIES BEYOND JANUARY 1960 ARE MEANINGLES SINCE NEW PROGRAMS WILL BE ADDED.

MANPOWER REQUIREMENTS

UNCLASSIFIED

[redacted]

COST ESTIMATE UNCLASSIFIED

		FISCAL 1959	BUDGETING ORGANIZATION	FISCAL 1960	BUDGETING ORGANIZATION
I	MSTV	117,000	5140		
		330,000	5250		
II	RW	146,000	5110		
III	SFTV	143,000	5140		
		50,000	5250		
IV	HTV			200,000	5140
				50,000	5250
V	WIC	150,000	5140	85,000	5140
		50,000	5250		
VI	WHAS			255,000	5140
				30,000	5250
VII	WWC			497,000	5140
				105,000	5250
VIII	UAV				
IX	LAS	18,000	5140		
		30,000	5250		
	TOTAL	$428,000	5140	$952,000	5140
		$460,000	5250	$185,000	5250

NOTE: Total Development Hardware costs not including wind tunnel models or wind tunnel test time.

UNCLASSIFIED