[redacted]

UNCLASSIFIED

Development Report

SC-DR-67-506
July 1967

RESULTS OF TX-61 WEAPON TEST 100-20 (U)

L. A. Suber, 1545

DECLASSIFICATION REVIEW
Classification (Circle Numbers):
Classification Retained
Classification Changed to: UNCL
Contains No DOE Classified Information
Contains UCNI
Contains UCNI
Contains
DECLASSIFY
Review Date: 1/6/98
RB Craner
Review Date: 1/19/98
Authority: ADD WC Layne
Name

[redacted]

SANDIA SYSTEMATIC DECLASSIFICATION REVIEW
DOWNGRADING OR DECLASSIFICATION STAMP

CLASSIFICATION CHANGED TO: U	AUTHORITY: W.C. Layne
Emelda Selph 2/2/98	RECORD ID: 98SN1426
PERSON CHANGING MARKING & DATE	
RB Craner 7/8/98	DATED: 1-19-98
PERSON VERIFYING MARKING & DATE	

[redacted]

RECORD COPY
Do Not Take From This Room

SANDIA LABORATORIES

OPERATED FOR THE U.S. ATOMIC ENERGY COMMISSION BY SANDIA CORPORATION | ALBUQUERQUE, NEW MEXICO, LIVERMORE, CALIFORNIA

UNCLASSIFIED

[redacted]

UNCLASSIFIED

[redacted]

SC-DR-67-506

RESULTS OF TX-61 WEAPON TEST 100-20
(Title Unclassified)

L. A. Suber, 1545
Sandia Laboratory, Albuquerque

July 1967

ABSTRACT (U)

This report presents the results of a ballistic, 90° LABS-release, free-fall test of the TX-61 weapon. The test verified the satisfactory roll-rate performance of the TX-61 when released in this maneuver at low altitude.

[redacted]

b

UNCLASSIFIED

[redacted]

DISTRIBUTION:
Hq. FC/DASA, Sandia Base, Albuquerque, New Mexico
  Attn: Adjutant General
  For: Major R. E. Caudle, FC/DD-3
AFSWC (SWTFP) Kirtland Air Force Base, New Mexico
  For: Capt. Ronald C. Lineback, FR-74828
O. M. Fligner, 1522
R. T. Othmer, 1541
J. T. Risse, 1542
P. F. Jones, 1544
W. R. Hoagland, 1545
I. M. Moore, 1610
R. W. DeVore, 2110
R. D. Robinett, 7215
S. A. Moore, 7230
J. K. Cole, 9325
  Attn: J. A. Stark
B. F. Hefley, 8232
B. R. Allen, 3421
L. C. Baldwin, 3412
C. H. Sproul, 3428-2 (3)

[redacted]

[redacted]

CONTENTS

	Page
Introduction and Objectives	7
Summary of Results	7
Description of Test Vehicle	8
Instrumentation	9
Results	9
APPENDIX A - Data Summary	11
APPENDIX B - Illustrations	15

Frontispiece. TX-61 test unit 100-20 loaded on F-4C aircraft

RESULTS OF TX-61 WEAPON TEST 100-20

Introduction and Objectives

For the TX-61 to properly arm in the free-fall option, a spin rate of 3.2 rps must be obtained at a nominal 3.0 seconds after release and must be maintained for 0.2 second. This roll rate is the minimum value guaranteed to hold the MC1936's closed to permit arming during this time window. The timer that provides the opportunity for arming will provide the 0.2-second window 2.5 seconds to 3.3 seconds after system battery voltage reaches 18 volts. The worst case would be a late timer (3.3 sec), combined with a low-altitude, low-speed, 90° LABS release in which the canted fins hinder the roll rate by damping rather than helping to maintain it, causing the roll rate to decrease rapidly after spin-rocket burnout.

There was concern that in such a combination the weapon roll rate would have decreased to a value insufficient to permit arming. Test 100-16 was conducted to investigate the roll rate characteristics under these conditions and some data were obtained, but test 100-20 was conducted under more severe conditions as a verification test.

The prime test objective of 100-20, then, was to investigate the roll-rate characteristics of the TX-61 when released from a 90° LABS maneuver at low altitude and low speed. A secondary objective was to obtain ballistic trajectory data, including free-fall drag, to be used in compilation of dispersion data for the TX-61.

Summary of Results

The test was successfully conducted at the conditions shown in Table I, and the results indicated a roll rate of 3.3 rps at 3.5 seconds after release. This roll-rate value indicated satisfactory performance of the TX-61 under these release conditions.

TABLE I

Date	7-18-66
Aircraft	F-4C
Release Altitude (MSL)	12,689
Release Attitude (deg)	82
Release Speed (KEAS)	350
Release Speed (Mach)	0.66
Apogee of Unit (MSL)	20,602
Apogee (Sec. from release)	22
Target Altitude (MSL)	5365

Description of Test Vehicle

The test unit was constructed from standard TX-61 external case parts to provide the correct external configuration, but the internal components consisted only of ballast, instrumentation, and the necessary test electrical components.

Mechanical

Figure 1 shows the mechanical configuration of the test unit. A MAT nose was used in place of the radar nose. This has the same external contour, weight, CG, and approximately the same MI's as the TX-61 radar nose, but is essentially hollow and was used to allow easy installation of a solar cell in the skin as a backup to the normal roll rate instrumentation.

The center case (with no SS material) contained a ballast system of foam and steel located forward, and the telemetry package located aft. The case was closed with a special steel cover plate in which connector holes furnished electrical access to the TM package.

The preflight case contained a MAT control box (N81848) containing special timing devices and an XMC1951 spin rocket.

The tail section contained a bracket to hold the pullout cable connector, a XMC1876 actuator, and a 17-foot-diameter parachute with its MC1835 Gas Generator.

Table II summarizes the physical characteristics of the test unit.

TABLE II

Length (in.)	141.6
Diameter (in.)	13.3
Weight (lb)	710
CG Sta. (in.)	60.0
Roll MI (lb-in.^{2})	14,320
Yaw MI (lb-in.^{2})	786,700

Electrical

The electrical system is shown in Figure 2. An XMC1876 pulse actuator and a MAT control box were used to initiate the XMC1951 spin rocket approximately 0.3 second after release. An MC1356 timer installed in the MAT box, was also initiated at this time. After the time selected on the MC1356 timer (48 seconds) expired, the parachute was deployed for recovery purposes. A CF1806 pullout cable was used. Two XMC1936 radial inertial switches were mounted on the telemetry package to obtain data on switch closure. They were located at the same radial distance from the weapon centerline as in the WR configuration.

Instrumentation

Data were collected by on-board cameras for separation, by ground cameras for documentation and trajectory, and by FM-FM telementry link for the instrumentation in the test unit.

The following characteristics were monitored by the instrumentation contained on the telemetry package:

Characteristi	Range	Frequency Response (Hz)
Roll displacement	Continuous	20
Pitch displacement	Continuous	20
Yaw displacement	±85°	20
Ejection velocity	0 - 15 fps	200
Longitudinal acceleration	-20, +200 g	50
Solar cell	0 to 5 V	50

In addition to the transducer information listed above, four channels on the telemetry were used to monitor the sequence information on arming (electrical system arm and TM to internal power), spin-rocket fire signals, and the closure of the MC1936 radial switches.

Results

The data summary in Appendix A lists in tabular form all the compiled data from test 100-20. Trajectory data are presented in graphical form in Figures 3 through 8, including plots of altitude versus range; and range, altitude, total velocity, dynamic pressure, and mach number, each versus time. Two plots of roll rate are presented in Figures 9 and 10. The first plot is for the first 10 seconds after release and the second is for the entire trajectory. Figure 11 shows the ejection velocity and vertical displacement of the weapon away from its original position at release. These two curves were obtained by integrating the output of a vertical accelerometer mounted in the test unit.

The roll rate obtained on this test correlates very well with data obtained on previous tests conducted at this type of release condition. Table III presents roll-rate information for previous tests 100-9 and 104-4 (12.75-inch diameter tests) and for tests 104-7 and 100-16 (13.3-inch-diameter), alongside the corresponding data for 100-20 to allow direct comparison.

TABLE III

Factors	Tests				
	12.75		13.3		
	100-9	104-4	104-7	100-16	100-20
Release altitude (ft-MSL)	23,871	10,691	21,702	20,925	12,689
Release speed (Mach)	0.71	0.47	0.77	1.00	.66
Release attitude	90° LABS	87° LABS	95° LABS	82° LABS	82° LABS
Roll rate at 3 secs (rps)	3.6	4.0	3.2	3.5	3.4
Apogee altitude (ft-MSL)	37,409	14,305	31,196	35,608	20,602
Roll rate at apogee (rps)	1.8	ND	1.9	1.9	1.5
Roll rate-maximum (rps)	4.0	4.0	4.1	3.5	4.0

The effect of the lower altitude release on 100-20 can be observed in the values of roll rate at apogee for 104-7, 100-16, and 100-20. The more dense air through which 100-20 traveled resulted in more damping of roll rate by the fins on this test than on the other two tests, thus producing a lower roll rate.

Concern about roll rate-arming problems has ceased as a result of both this test, conducted at worst-worst conditions, and previous tests, conducted at less severe conditions. The test therefore may be deemed successful in all respects.

APPENDIX A

Data Summary

APPENDIX A

Data Summary (100-20)

Date	7-18-67
Unit Data	
Weight (lb)	710
CG Station (in.)	60.0
Yaw MI (lb-in.^{2})	786,700
Roll MI (lb-in^2)	14,320
Fin cant angle (min)	50
Recovery chute used	Yes
Release Data	
Aircraft	F-4C
Position on aircraft	Centerline
Release altitude-requested (ft-MSL)	12,000
Release altitude-actual (ft-MSL)	12,689
Target altitude (ft-MSL)	5365
Mach number, requested	0.65
Mach number, actual	0.66
Knots-TAS, actual	435
Knots-ground speed, actual	66
Knots-CAS, actual	362
Knots-EAS, actual	349
Aircraft heading, actual (deg)	355
Wind velocity (fps)	17
Wind direction (deg)	192
Air temperature (°F)	50
Aircraft vertical velocity (fps)	729
Aircraft trajectory angle (deg)	82
Aircraft rack type	Aero 27A
Cartridge type and number	Mk 51-1
Ejection velocity (fps)	16
Dynamic pressure (Q-lb/ft^2)	414
Pullout device	MC1876
Timer used and setting	MAT - 0.3 sec
Recovery Chute Data	
Optical chute sequence	
Time in sec from tail cone off to:	
Line stretch	0.14
Full inflation	0.62
Dynamic pressure at gas generator fire (lb/ft^2)	530
Mach number at gas generator fire	0.71
Electrical chute sequence	
Time in sec from gas generator fire to:	
Line stretch	0.15
Maximum g load	0.30
Maximum g load (actual value in g's)	43
Terminal velocity (actual-fps)	80
Terminal velocity (corrected-fps)	74

Maximum CDS (ft^2)	126
Dynamic pressure at maximum CDS (lb/ft^2)	22
Average CDS (ft^2)	124
Spin Rocket Data	
Time base	Vertical accelerometer
Time to rocket fire from time base (sec)	0.28
Induced spin rate (rps)	4.17
Maximum spin rate (rps)	4.17
Time to maximum spin from time base (sec)	1.07
Time to 3.5 rps from time base (sec)	0.90
Spin rate at 3.0 seconds (rps)	3.45
Spin rate at apogee (rps)	1.50
Inertial Switch Data	
Time from time base in seconds to:	
Switch 1 closure	0.87
Switch 2 closure	0.88
Roll rate at switch opening (rps)	2.74
Trajectory Data	
*Maximum dynamic pressure (lb/ft^2)	535
*Altitude at maximum Q (ft-MSL)	10,063
*TM time of fall (sec)	47.93
*Range (ft)	5663
*Drift (ft)	151
Apogee above target (ft)	15,23[illegible]
Impact Data	
*Impact velocity VA (fps)	802
*Trajectory angle, TA_A(deg)	84
Impact medium	Dirt

*End of free-fall portion of trajectory.

APPENDIX B

Illustrations

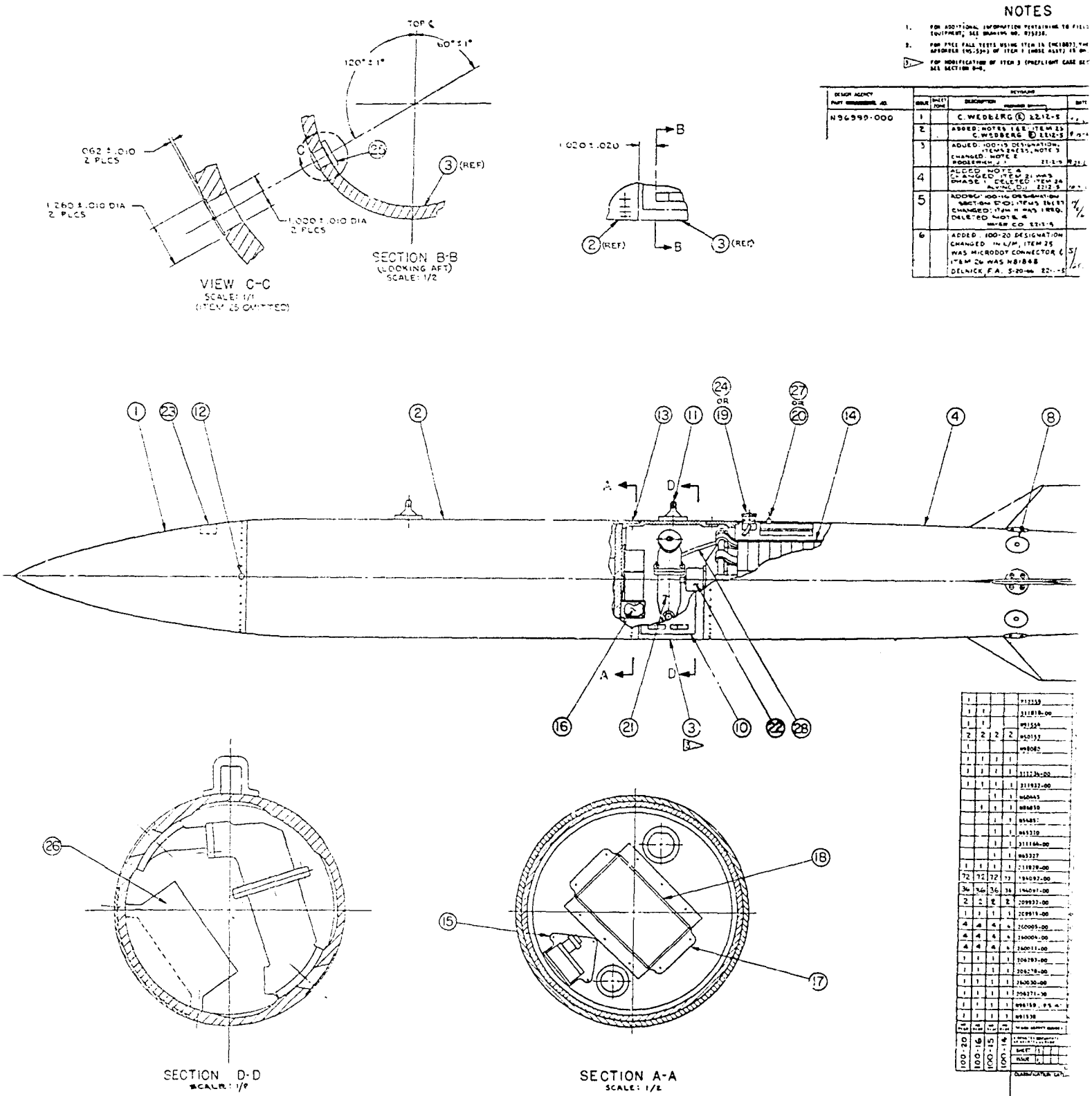
NOTES
VIEW C-C
SCALE: 1/1
SECTION B-B
(LOOKING AFT)
SCALE: 1/2
SECTION D-D
SECTION A-A
SCALE: 1/2

Figure 1.

[redacted]

NOTES

1. FOR ADDITIONAL INFORMATION PERTAINING TO FIELD TEST EQUIPMENT, SEE DRAWING NO. 975730.
2. FOR FREE FALL TESTS USING ITEM 36 (MC1887), THE ENERGY ABSORBER (N95554) OF ITEM 1 (MOSE ASSY) IS OMITTED.
3. FOR MODIFICATION OF ITEM 3 (PREFLIGHT CASE SECTION), SEE SECTION B-B.

DESIGN AGENCY PART NUMBER	REVISIONS: BLK	SHEET ZONE	DESCRIPTION (REPORTS TO)	DATE	CHKD	ENGR
N96999-000	1		C. WEDBERG (R) 22.12-5			
	2		ADDED: NOTES 1 & 2, ITEM 23 C. WEDBERG (R) 22.12-5			
	3		ADDED: 100-15 DESIGNATION; ITEMS 2 & 23, NOTE 3 CHANGED: NOTE 2 RODERMICH, J.J. 22.12-5			
	4		ADDED: NOTE 4 CHANGED: ITEM 21 WAS (PHASE 1) DELETED ITEM 24 ALVINO, D.J. 22.12-5			
	5		ADDED: 100-16 DESIGNATION SECTION D-D; ITEMS 26 & 27 CHANGED: ITEM 11 WAS 1 REQ. DELETED NOTE 4 WEBB CO 22.12-5			
	6		ADDED: 100-20 DESIGNATION CHANGED: IN L/M, ITEM 25 WAS MICRODOT CONNECTOR & ITEM 26 WAS N81848 DELNICK, F.A. 5-20-66 22.12-5			

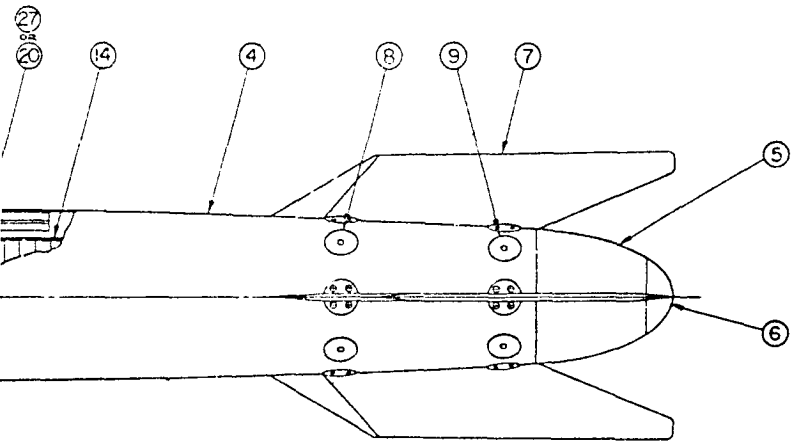

1				P12359	TEST BALLISTIC TEST CABLE				28
1	1			311818-00	MC1876				27
1	1			N81554	CONTROL BOX ASSY (M.A.T.)				26
2	2	2	2	N50152	TC136				25
1				N98080	P/O CONNECTOR AND BRACKET NO. 2 ASSY.				24
1	1	1	1		SOLAR CELL				23
1	1	1	1	311226-00	MC1855				22
1	1	1	1	311923-00	MC1951 (PHASE 2)				21
		1	1	N60445	PULSE INITIATOR (TEST) NO. 3				20
	1	1	1	N98850	P/O CONNECTOR AND BRACKET NO. 2 ASSEMBLY				19
		1	1	N54857	JUNCTION BOX, UNIVERSAL (BTG)				18
		1	1	N65370	MOUNT, JUNCTION BOX				17
		1	1	311166-00	MC1396				16
		1	1	N65327	MOUNT, TIMER				15
1	1	1	1	311829-00	MC1887				14
72	72	72	72	194082-00	SCREW, MACHINE				13
36	36	36	36	194097-00	SCREW, MACHINE				12
2	2	2	2	209937-00	LUG, SUSPENSION				11
1	1	1	1	209919-00	DOOR, ACCESS				10
4	4	4	4	260005-00	COVER AND SCREW, AFT				9
4	4	4	4	260004-00	COVER AND SCREW, FWD				8
4	4	4	4	260011-00	PIN				7
1	1	1	1	206293-00	CAP AND SCREW, REAR				6
1	1	1	1	206278-00	CASE EXTENSION, REAR				5
1	1	1	1	260030-00	CASE SECTION, REAR				4
1	1	1	1	206271-00	CASE SECTION, PREFLIGHT (MODIFIED)				3
1	1	1	1	896159 (P.S.A.)	CENTER CASE ASSEMBLY				2
1	1	1	1	N91538	MOSE ASSEMBLY (DUMMY RADAR)	Z			1
100-20	100-16	100-15	100-14		LIST OF MATERIAL				

DESIGN AGENCY APPROVALS: DFG DATE INITIALS

TITLE: TX 61 FREE FALL (BTS) 100 SERIES -13.3 DIA -

DWG AGENCY NUMBER

DWG CLASSIFICATION LEVEL: UNCLASSIFIED

PART CLASSIFICATION: UNCLASSIFIED

SIZE E DWG NUMBER N96999

SCALE 1/4 SHEET 1 OF

igure 1.

[redacted]

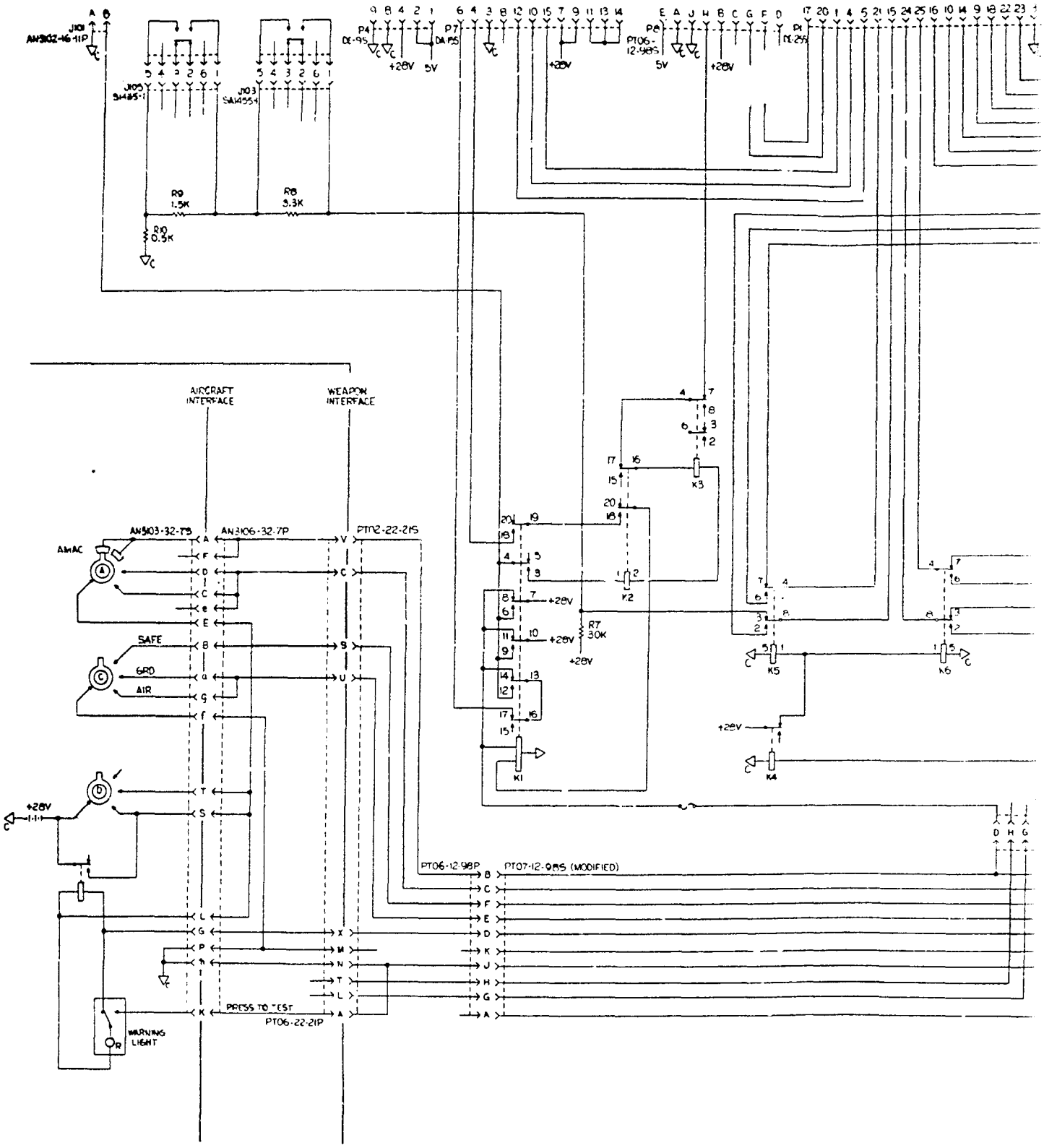
J101
AN3102-16-11P
J105
SA1435-1
J103
SA1455-1
P4
DE-9S
P7
DA-15S
P8
PT06-12-98S
P1
DE-25S
+28V
5V
R9
1.5K
R8
3.3K
R10
0.5K
AIRCRAFT INTERFACE
WEAPON INTERFACE
AN3103-32-7S
AN3106-32-7P
PT02-22-21S
AMAC
SAFE
GRD
AIR
K1
K2
K3
K4
K5
K6
R7
30K
PT06-12-98P
PT07-12-98S (MODIFIED)
PRESS TO TEST
PT06-22-21P
WARNING LIGHT

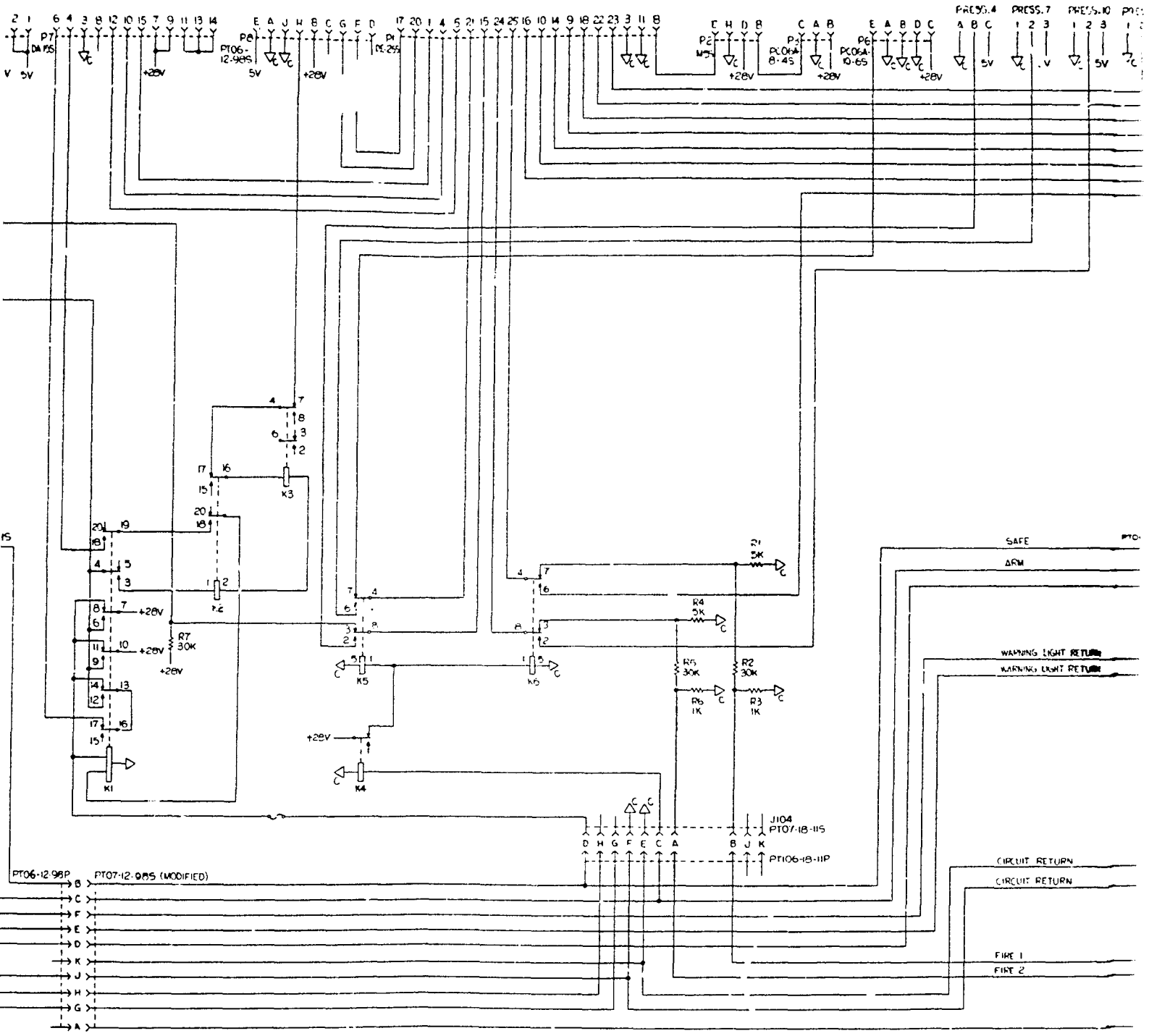
PRESS.4
PRESS.7
PRESS.10
P7
P8
PT06-12-98S
P1
P2
P3
PC06A-8-4S
P6
PC06A-10-6S
+28V
5V
K1
K2
K3
K4
K5
K6
R1 5K
R2 30K
R3 1K
R4 5K
R5 30K
R6 1K
R7 30K
SAFE
ARM
WARNING LIGHT RETURN
WARNING LIGHT RETURN
J104
PT07-18-11S
PT106-18-11P
CIRCUIT RETURN
CIRCUIT RETURN
FIRE 1
FIRE 2
PT06-12-98P
PT07-12-98S (MODIFIED)

Figure 2.

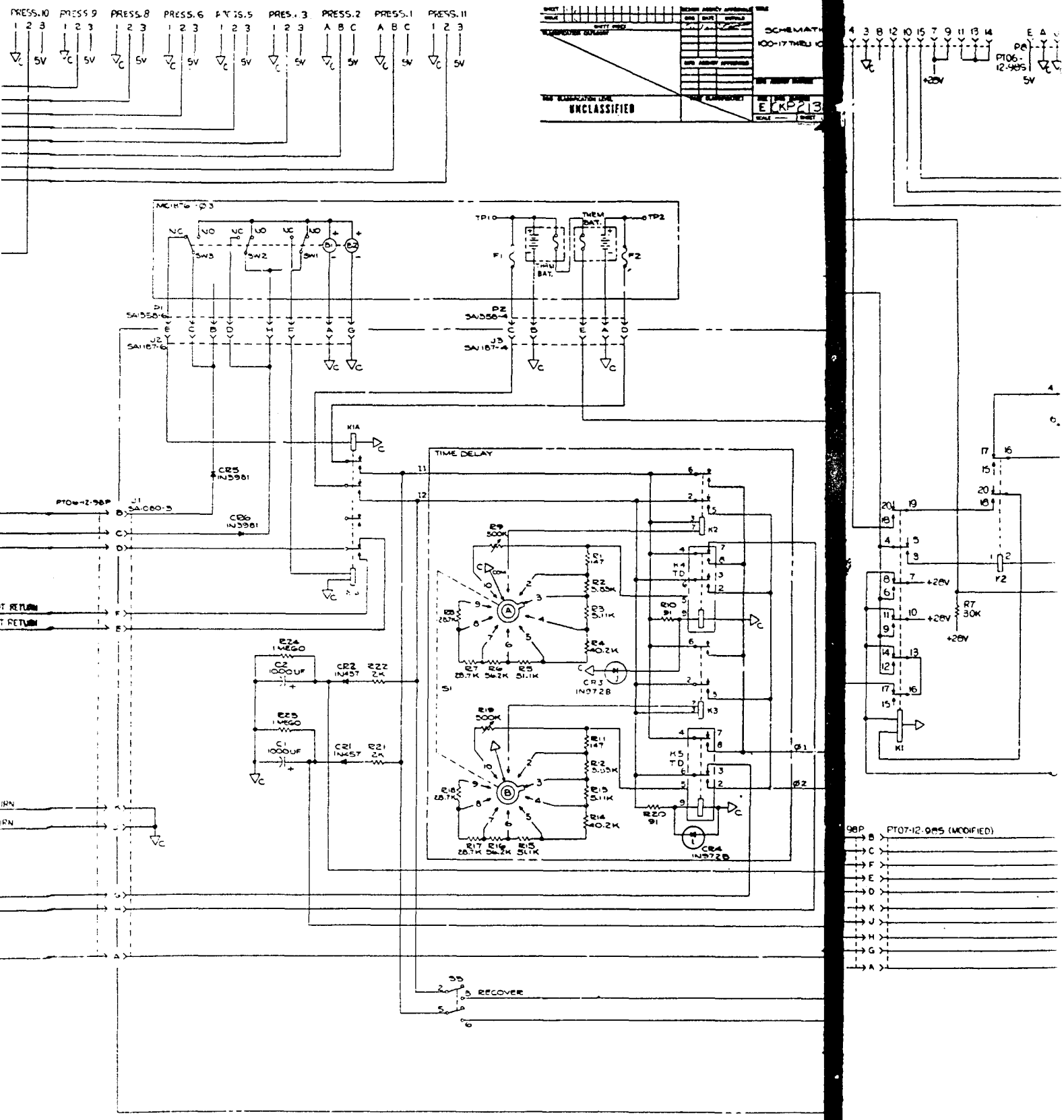
PRESS.10
PRESS.9
PRESS.8
PRESS.6
PRESS.5
PRES.3
PRESS.2
PRESS.1
PRESS.11
SCHEMATIC
UNCLASSIFIED
TIME DELAY
RECOVER
PT07-12-98S (MODIFIED)

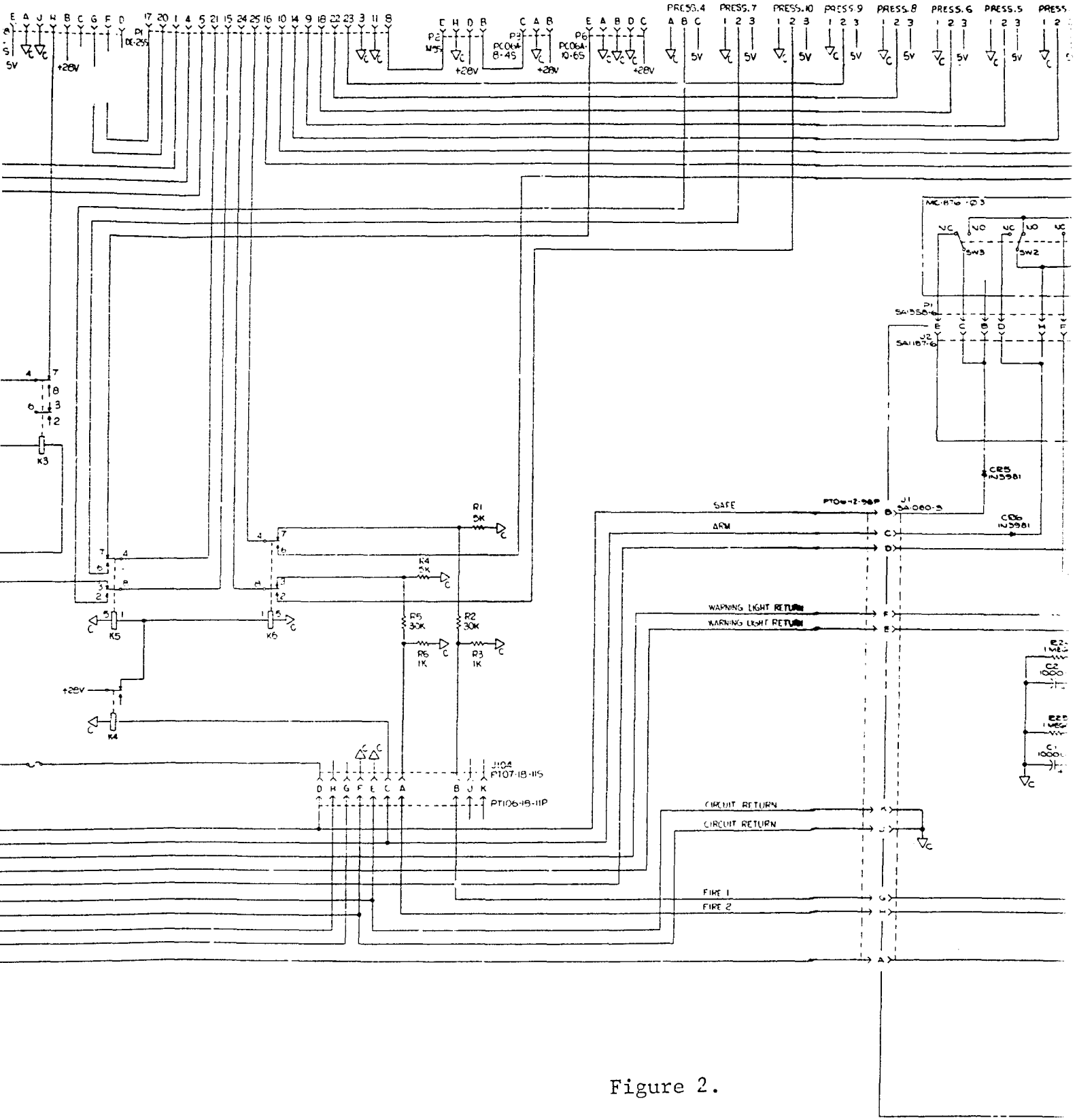
PRESS.4
PRESS.7
PRESS.10
PRESS.9
PRESS.8
PRESS.6
PRESS.5
P1 DE-25S
P2 M55
P3 PC06A-8-4S
P6 PC06A-10-6S
+28V
5V
K3
K5
K6
K4
R1 5K
R4 5K
R5 30K
R2 30K
R6 1K
R3 1K
J104 PT07-18-11S
PT106-18-11P
SAFE
ARM
WARNING LIGHT RETURN
WARNING LIGHT RETURN
CIRCUIT RETURN
CIRCUIT RETURN
FIRE 1
FIRE 2
J1 SA1080-3
CR5 1N3981
CR6 1N3981
SW3
SW2
J2 SA1187-6
C2 1000
C1 1000

Figure 2.

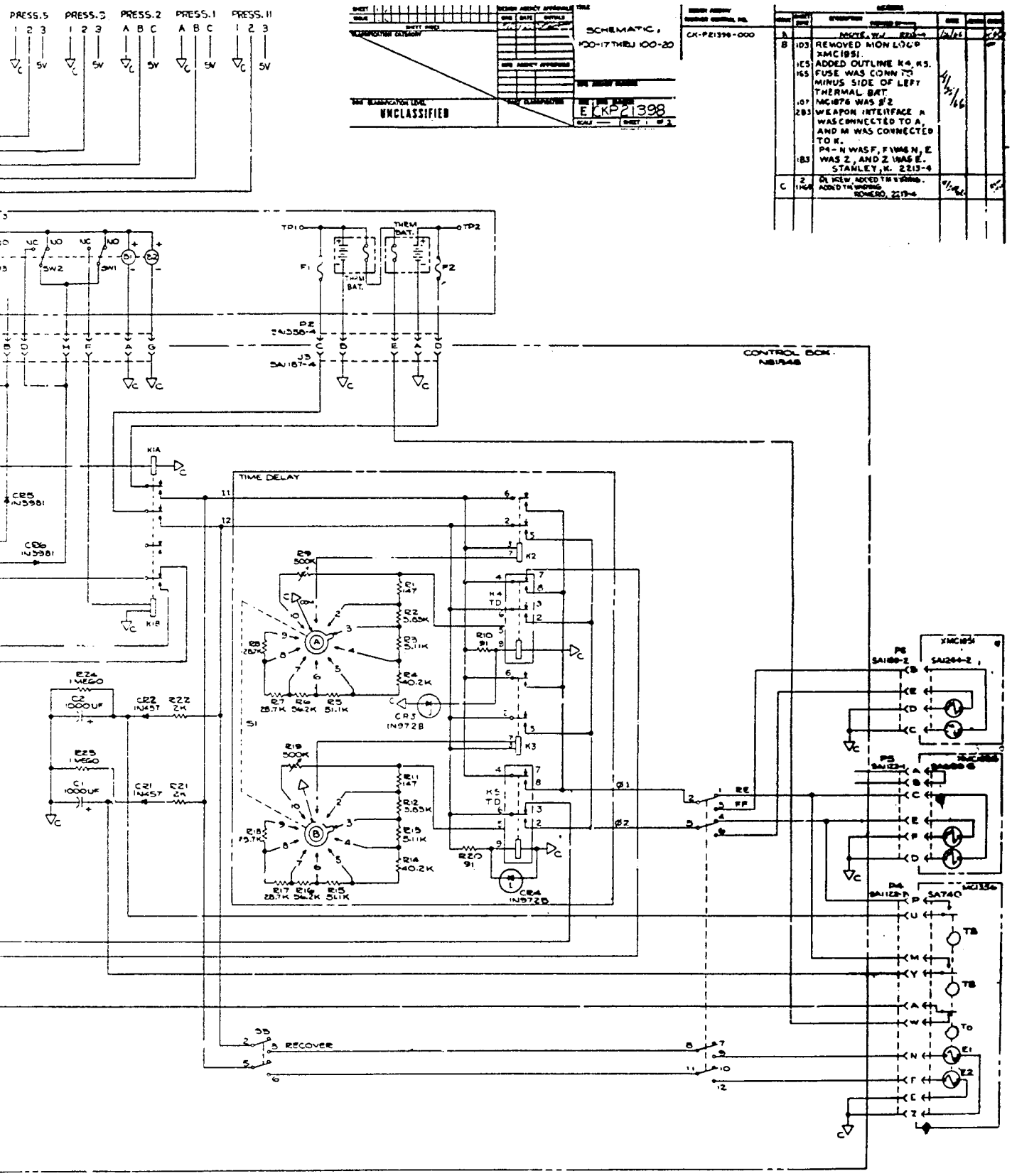
PRESS.5
PRESS.3
PRESS.2
PRESS.1
PRESS.11
SCHEMATIC,
100-17 THRU 100-20
UNCLASSIFIED
CONTROL BOX
TIME DELAY
RECOVER

[redacted]

UNCLASSIFIED

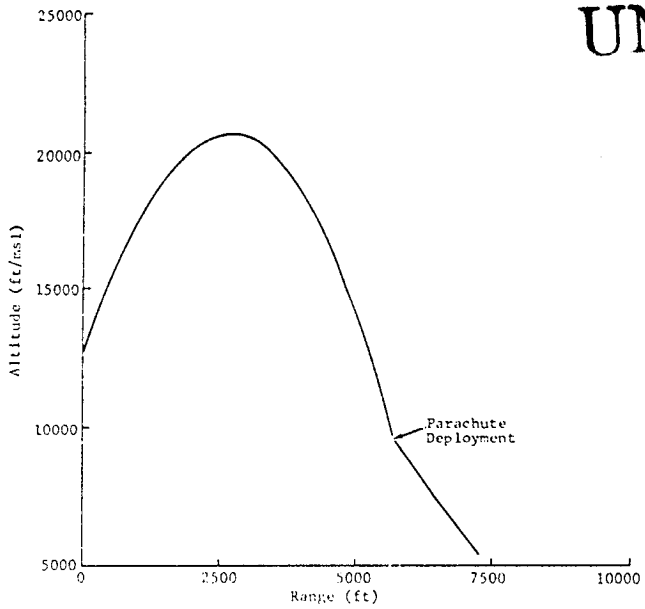

Figure 3. Altitude versus range

Optical Data
Site: TTR
Date: 7/18/66
(Same data for Figures 3 thru 8)

Figure 4. Range versus time

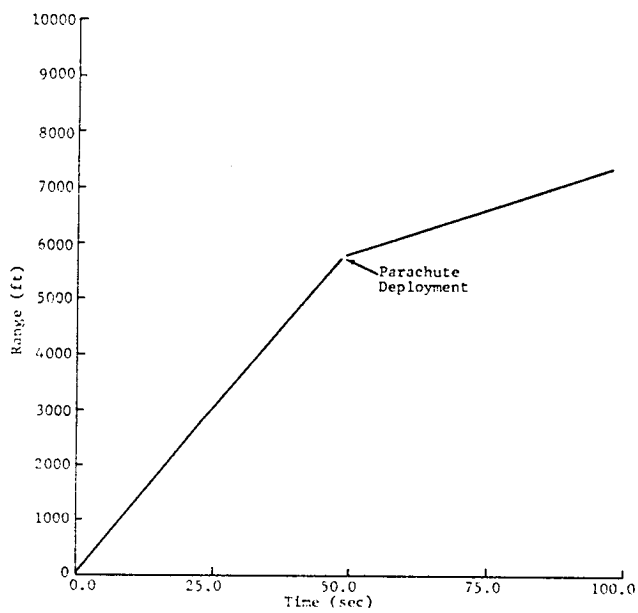

UNCLASSIFIED

[redacted]

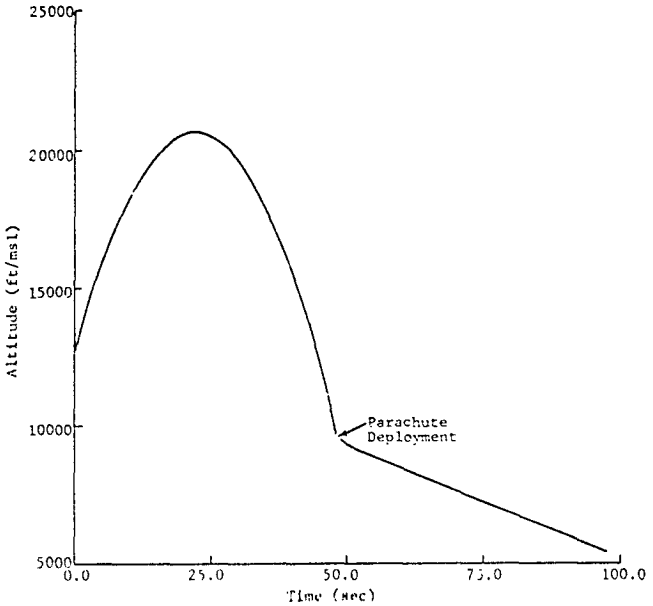

Figure 5. Altitude versus time

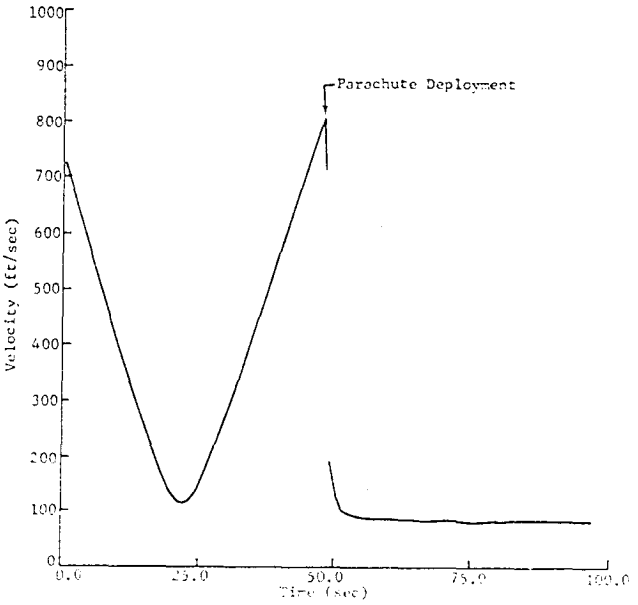

Figure 6. Total velocity (VA) versus time