000312 W.O.# - 489703
Total Copies - 24

[redacted]

UNCLASSIFIED

TEST REPORT TX-53
FIN DEPLOYMENT

INVENTORIED
MAR 1 1966
3428-3

SANDIA SYSTEMATIC DECLASSIFICATION REVIEW
1st Review Date: 11/26/97
Authority: ADC ADD
Name: [illegible]
2nd Review Date: 12-01-97
Authority: ADD
Name: W. Layne
Determination (Circle Number):
1. Classification Retained
2. Classification Changed to: UNCL
3. Contains No DOE Classified Information
4. Contains Wit:
5. Contains UCAI?
6. Comments: OK for Open Net

INVENTORIED
MAR 8 '05
3427-1

SCDR-250-59

~~ATOMIC WEAPON DATA~~

~~SIGMA 3~~

Ref. Sym: 3423 (79)

INVENTORIED
AUG 1 1963
3427-1

R. J. Brown, 1217

and

G. Loeppke, 1217

January 1960

INVENTORIED
12 B

Approved by: S. A. Moore
S. A. Moore, 1210

SANDIA SYSTEMATIC DECLASSIFICATION REVIEW
DOWNGRADING OR DECLASSIFICATION STAMP

CLASSIFICATION CHANGED TO: U	AUTHORITY: W. C. Layne
Emilda Selph 12/8/97	RECORD ID: 98SN1030
PERSON CHANGING MARKING & DATE	
William Layne 12/15/97	DATED: 12-01-97
PERSON VERIFYING MARKING & DATE	

ABSTRACT

This report describes a live test conducted to determine the cause of failure of the fin extension system on Drop Test 53-3.

[redacted]

This document consists of 12 pages
No. 24 of 24 copies, Series A.

INVENTORIED
SEPT 6 1960

UNCLASSIFIED

[redacted]

[redacted]

UNCLASSIFIED

DISTRIBUTION:

1/24A - E. I. Bruce, 1217
2/24A - D. R. Cotter, 1260
3/24A - A. A. Lieber, 1262
4/24A - R. H. Schultz, 1280
5/24A - J. I. Hegge, Jr., 1320
6/24A - G. J. Hildebrandt, 1330
7/24A - J. W. Grear, 1432-4
8/24A - W. E. Boyes, 1440
9/24A - C. M. Gabriel, 2531
10/24A - G. E. Hansche, 5220
11/24A - M. G. Randle, Central Development File, 3421-2
12/24A - R. K. Smeltzer, Central Record File, 3421-3
13/24A - W. F. Carstens, 3423
14-24/24A - Documents, 3466-1

[redacted]

UNCLASSIFIED

[redacted]

[redacted]

UNCLASSIFIED

TABLE OF CONTENTS

	Page
Introduction	5
Test Objective	5
Descriptions	5
Mechanical System	5
Electrical System	8
Test	8
Test Conditions	8
Test Results and Conclusions	8
Mechanical System	8
Electrical System	8

LIST OF ILLUSTRATIONS

Figure		Page
1	Fin Extended	6
2	Bermite Explosive Cutter	7
3	Junction Box	9
4	Firing System Circuit Diagram	10
5	Test Vehicle	11

UNCLASSIFIED

[redacted]

TEST REPORT TX-53 FIN DEPLOYMENT

Introduction

The TX-53 is a class "C" weapon incorporating three different delivery profiles; i.e., high-altitude free-fall, high-altitude retarded, and low-altitude laydown. Ballistic drop tests are being conducted to prove out and evaluate the electrical system, the retardation system, and the laydown shock mitigation system.

On drop test 53-3, the fin extension system failed to operate. It was never established conclusively which system, the electrical or the mechanical, had failed. This report contains a description of a live test performed under controlled conditions by 1217-2 to isolate the malfunctions encountered on drop test 53-3.

Test Objective

The objective of this test was to establish the cause of failure of the fin extension system on drop test 53-3 so that corrective action could be taken before the next flight test.

Descriptions

Mechanical System

A standard TX-53 tapered afterbody was used with the 1217 flip fins and a 1217-2 fin deployment electrical system.

The fins were disassembled, and all hubs and moving parts were inspected and coated with a thin coating of Moly-Coat, type "L".

The snubber assemblies, shown at the end of the fin in Figure 1, were filled with silicone oil "200", and the correct pre-load on the main cylinder was set.

The fins were assembled to the afterbody, and the system of pulleys, cables, and snubbing blocks was installed. The cables were correctly adjusted for tension and the turnbuckles safety-wired. The Bermite explosive cutter, shown in Figure 2, was installed, and the test vehicle moved to the Area II York Chamber.

[redacted]

UNCLASSIFIED

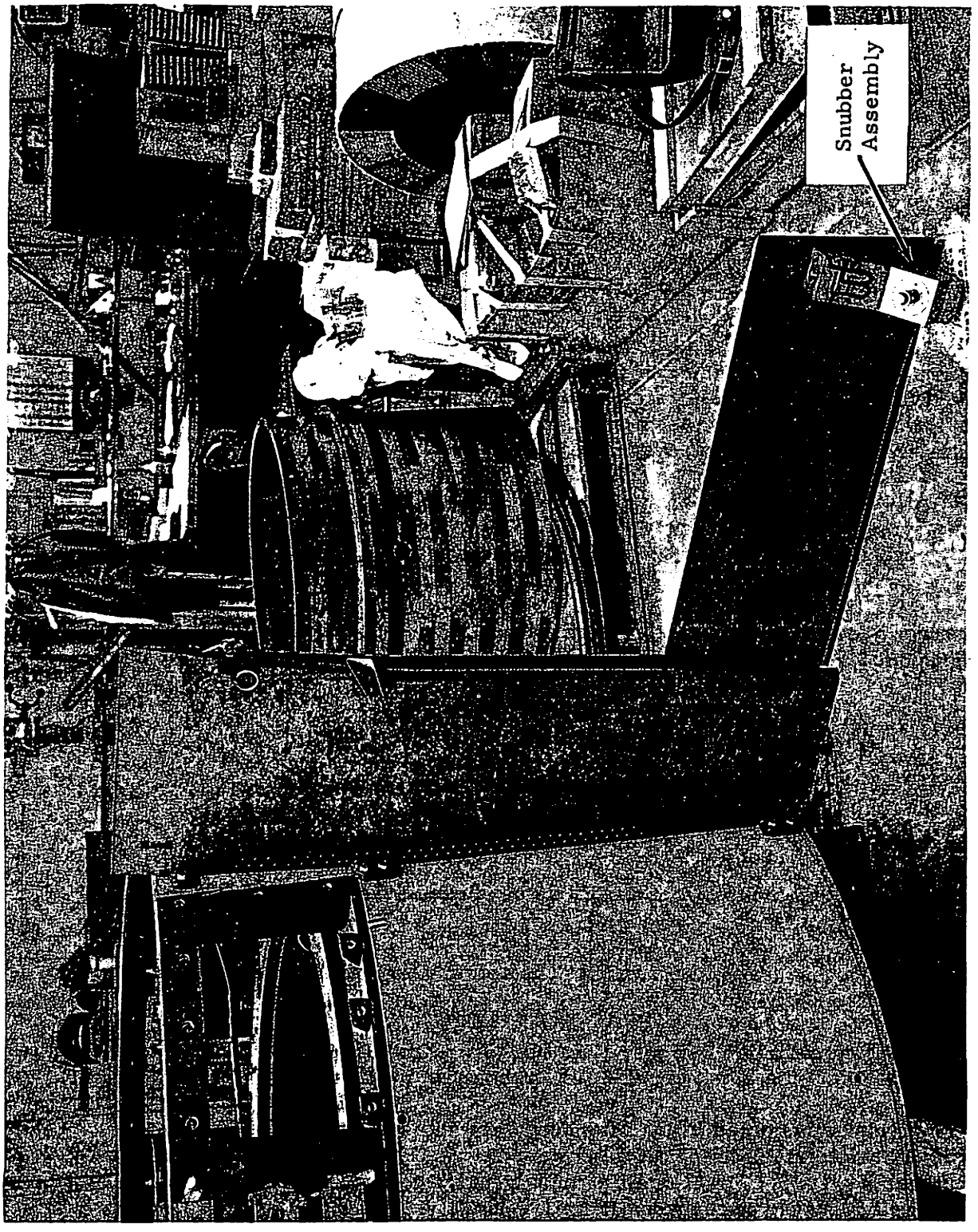

Figure 1. Fin Extended

UNCLASSIFIED

[redacted]

[redacted]

UNCLASSIFIED

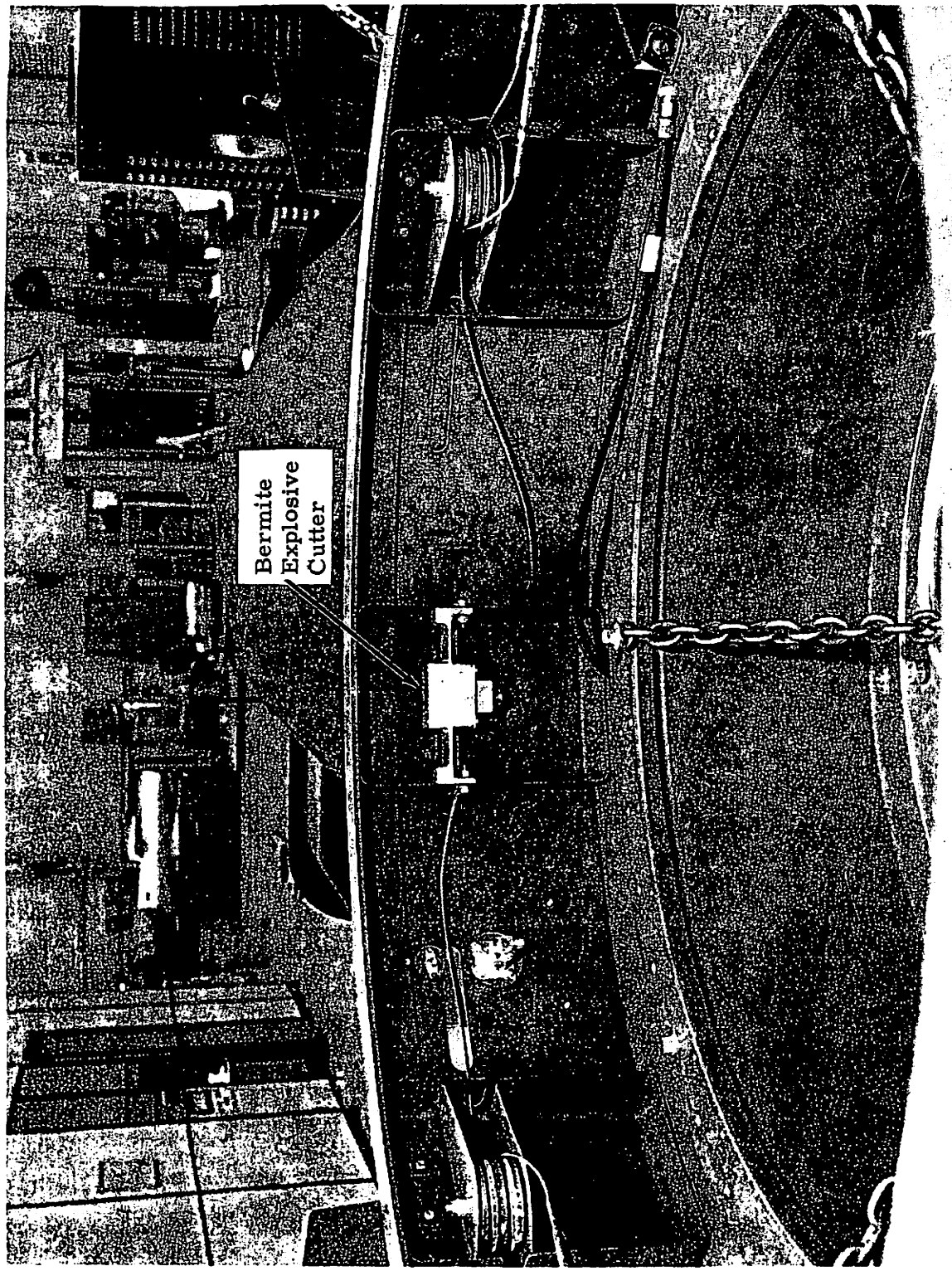

Figure 2. Bermite Explosive Cutter

UNCLASSIFIED

[redacted]

[redacted]

UNCLASSIFIED

Electrical System

The electrical system consisted of an MC-543 timer (Serial Number GP11293F8), a nickel-cadmium battery and a 1217-2 designed test junction box. The system was assembled and tested before being mounted on a plate within the afterbody used in the test (see Figure 3). Voltage was monitored at the telemetry connector to record pullout switch closure (or timer actuation) and timer switch closure (or Bermite Cutter Actuation). The circuit diagram is shown in Figure 4.

Test

The test was undertaken utilizing the York Chamber in Area II. The test vehicle, in assembled condition, (Figure 5) was to be put into the chamber to simulate a two-and-one-half hour flight test delivery, starting at ground temperature and ending at -60°F. The electrical system would then immediately be initiated, and a full fin deployment sequence would be performed. All electrical functions were monitored by instruments, and the fins and fin actuator were monitored visually.

The test was conducted on September 26, 1959.

Test Conditions

The York Chamber, with the test unit in it, was started and the simulated flight was performed. At firing time, the unit had been at -60°F for approximately 45 minutes and a light frost appeared on the vehicle. Visual examination of spring tension on the cables prior to the firing test showed no adverse effects due to low temperature.

Test Results and Conclusions

Mechanical System

Upon firing of the Bermite cutter, all fins opened. Two fins 180° apart did not fully extend to the locked position but, since the application of less than one pound on either fin moved the fin to the locked position, it was felt that the slip stream present during an actual test would have done this.

The fin, in the extended position, and its snubber block are shown in Figure 1. Figure 2 shows the cable cutter and the cut cable ends. Examination revealed that only one cutter had fired, proving the necessity for the reliability gained by two cutters.

Electrical System

Immediately after the simulated flight was completed in the York Chamber, the test vehicle was removed and the system was fired.

When the pullout switches were operated and the electrical system was initiated, the monitor registered the voltage rise at the timer actuator. After this voltage was monitored, there appeared to be a slight delay before the timer started to operate. The timer did function and the fins were deployed.

UNCLASSIFIED

[redacted]

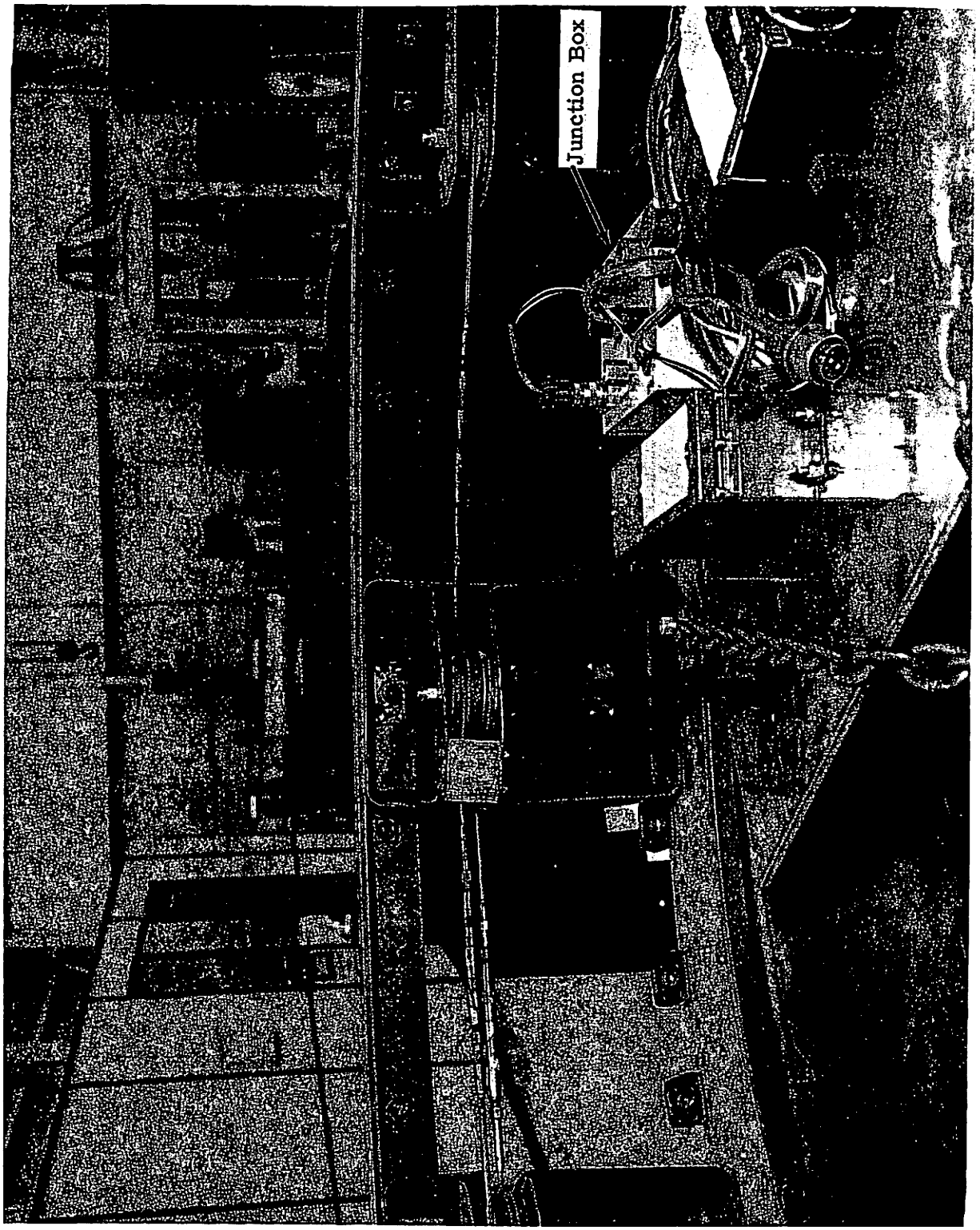

Figure 3. Junction Box

[redacted]

UNCLASSIFIED

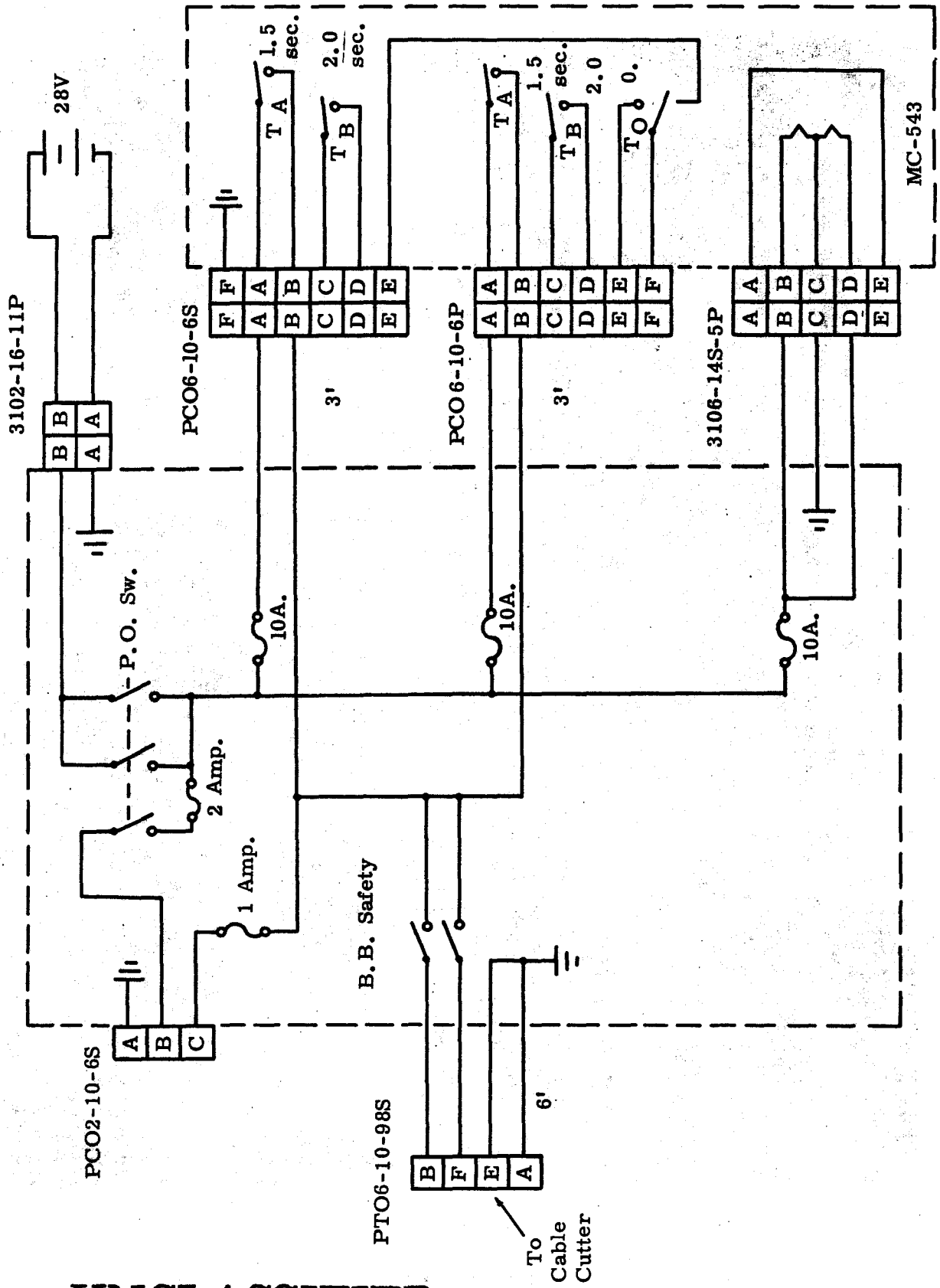

Figure 4. Firing System Circuit Diagram

UNCLASSIFIED

[redacted]

[redacted]

UNCLASSIFIED

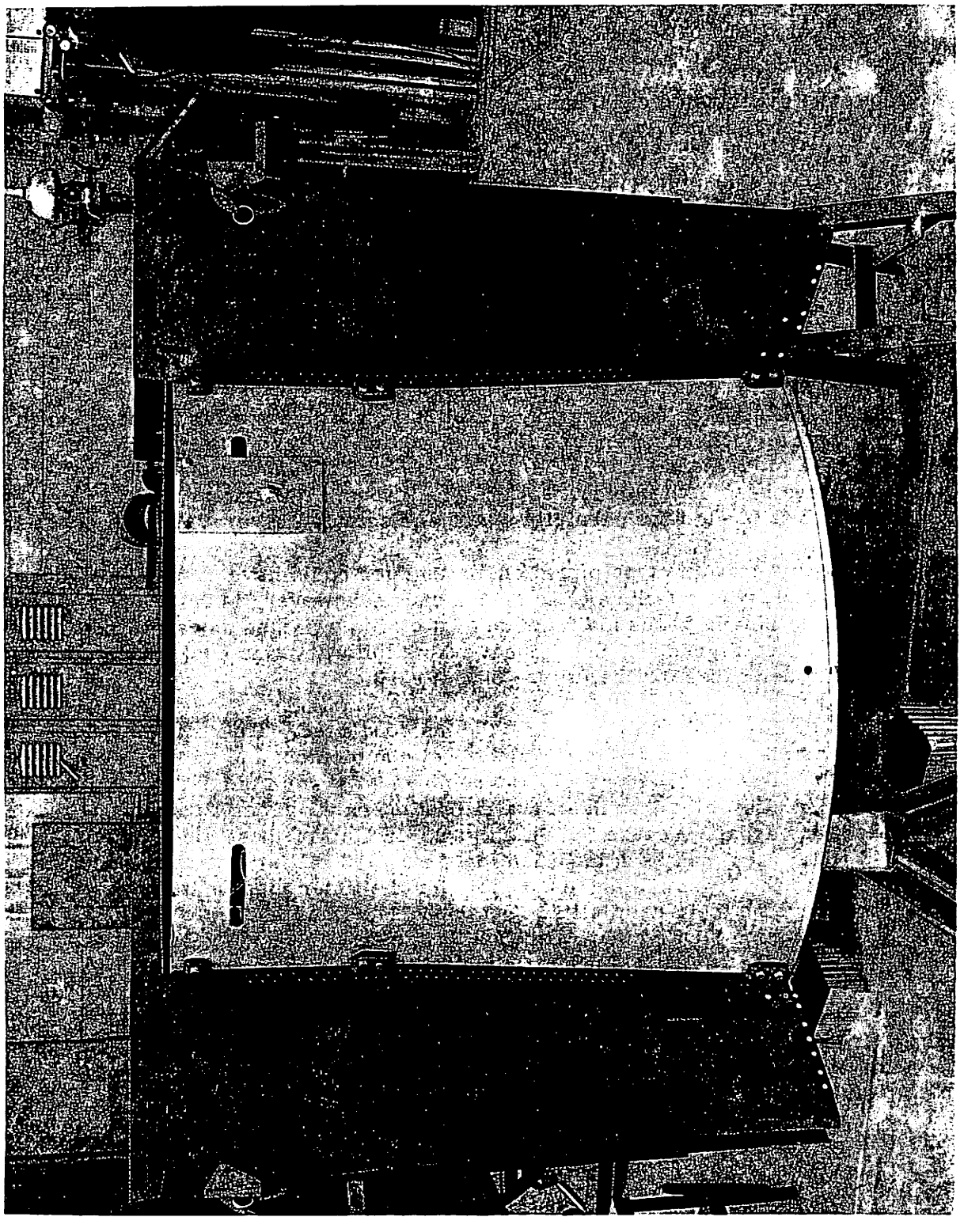

Figure 5. Test Vehicle

UNCLASSIFIED

[redacted]

The test vehicle was returned to the 1217-2 laboratory so that the possible causes for the delay in timer actuation and nonfiring of one Bermite cutter could be determined. Upon operating the system a second time, the timer did not start. The mechanical actuating mechanism within the timer had failed. Another MC-543 timer was substituted in the test, and the system functioned satisfactorily.

Under the supervision of the safety division, the unfired Bermite cutter was tested again. The cutter fired satisfactorily.

There are two possible causes for the initial failure of the cutter in this test. Due to the adverse temperature conditions, the battery may not have functioned properly, although the same type of battery had been used previously on several similar drop tests in the TX-53 program. As can be seen by the diagram (see Figure 4) the cutters are paralleled across the timer output, isolated only by the bomb bay safety switches. It is possible that one side of the safety switch could have failed to close; thus voltage was applied to only one cable cutter. This is the more reasonable explanation inasmuch as this type of switch failure has occurred in other instances.

Since the failure was encountered, the operation of this switch has been carefully checked whenever used. In succeeding applications, approximately one of every fifteen switches (standard Sandia stock item No. 626458) has been found to function unsatisfactorily. The malfunctions have been both intermittent and continuous. It is strongly recommended that, when this switch is used, it be carefully tested and actuated several times in the testing process.

It is possible that this type of switch malfunction could have caused the failure of drop test 53-3. The possibility of a failure from such a cause, however, is rather remote since this would require the simultaneous malfunction of two such switches as can be seen by the electrical circuit diagram (see Figure 4). Subsequent events following this cold chamber simulated flight test point to another cause for the failure of test 53-3.

On October 10, 1959, drop test 53-11L was conducted. This unit was to have been a laydown test vehicle utilizing a similar electrical complement and an MC-543 timer identical to the one used in test 53-3. However, the deployment system did not function on this test and a post mortem revealed that the timer did not operate. Examination of the timer remains did not reveal any apparent cause for the failure. In view of these circumstances, the remaining MC-543 timers that had been modified for the TX-53 ballistic drop test program were returned to 1321, the organization responsible for the timer modification; they were tested and operated to determine their reliability. Out of the 17 remaining timers tested, one did not function. Examination showed that, although the timer was recycled and apparently ready to operate, the actuating squibs had previously been fired.

It was concluded by Organization 1321 that the timer used in test 53-11L might also have contained fired actuators and have caused the failure of the test. It appears that this might also explain the failure of drop test 53-3.

The remaining modified timers have been carefully tested and recycled. New actuating squibs were installed. No more such failures have occurred in the following six ballistic tests.