[redacted] UNCLASSIFIED

~~SPECIFIED DISTRIBUTION ONLY~~

~~This report was prepared for distribution within Sandia Corporation. No further distribution of this report or dissemination of the information contained in this report shall be made to other agencies without approval of the issuing organization.~~

SCL-DR-68-15

BREAKOUT PATTERN OF PBX 9404 EXPLOSIVE (U)

J. Lucke
University of California, Berkeley*
and
D. M. Pierce
Electrical Subsystems Division 8331
Sandia Laboratories, Livermore

[redacted]

November 1968

UNCL
DECLASSIFY
RB Craner 1/27/98
1/29/98
WC Layne

ABSTRACT (U)

This report documents the results of the first of a series of tests designed to determine the breakout pattern of PBX 9404 explosive. Results of a series of additional investigations, in which many of the problems arising in the initial series were resolved, are included in an Appendix.

SANDIA SYSTEM ... REVIEW
CLASSIFICATION CHANGED TO: U
Emelda Selph 2/3/98
PERSON CHANGING MARKING & DATE
RB Craner 2/5/98
PERSON VERIFYING MARKING & DATE
W C Layne
RECORD ID: 98SN1473
DATED: 1/28/98

[redacted]

[redacted]

[redacted]

*Formerly Electrical Subsystems Division 8331 (Summer Hire)

[redacted] UNCLASSIFIED

[redacted]

UNCLASSIFIED

CONTENTS

	Page
Introduction	7
Description of Experiment	
Test Items	7
Instrumentation	7
Data Reduction	8
Results	
Axial Breakout Times	8
Radial Breakout Times	10
Comparison Between Axial and Radial Breakout Times	12
Future Experiments	12
Conclusions	13
APPENDICES	
A. Streak Camera Photographs	17
B. Reduction of Data for Radial Breakout	29
C. Results of Additional Investigations	39

UNCLASSIFIED

[redacted]

ILLUSTRATIONS

Figure		Page
1.	One-Inch and One-Half-Inch Charges	6
2.	Test Setup	6
3.	Lighting Time Versus Distance Along Charge	8
4.	Lighting Time Versus Distance Along Charge	9
5.	Lighting Time Versus Distance Along Charge	9
6.	Breakout Pattern for One-Half-Inch Charge (showing breakout times at different axial planes)	11
7.	Breakout Pattern for One-Inch Charge (showing breakout times at different axial planes)	11
8.	Current Input to TC 134 (axial breakout)	14
9.	Current Input to TC 134 (radial breakout)	15

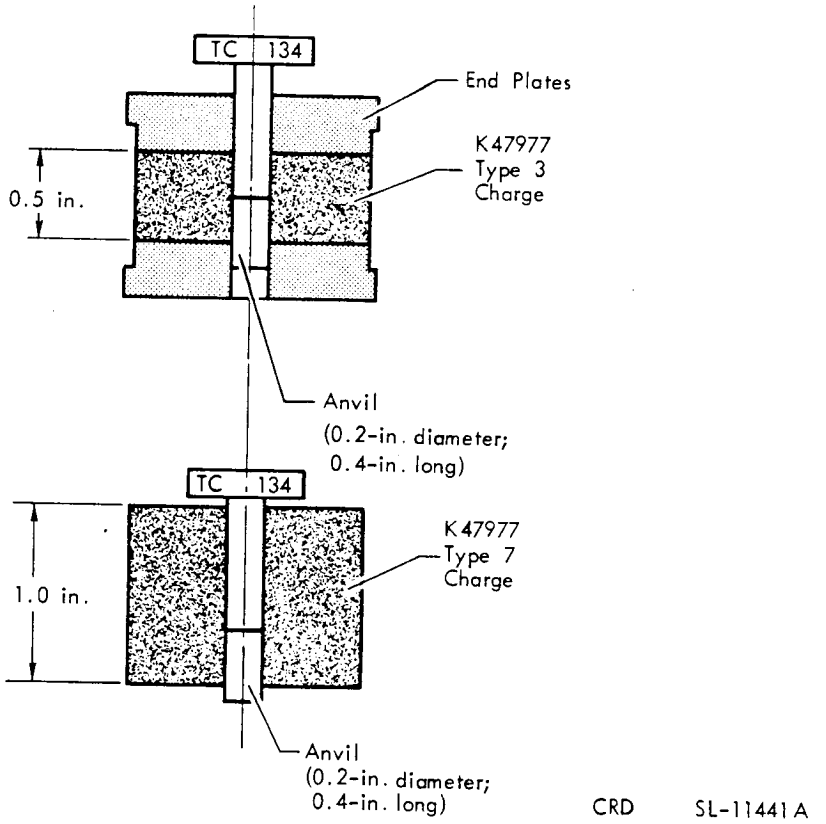

Figure 1. One-Inch and One-Half-Inch Charges

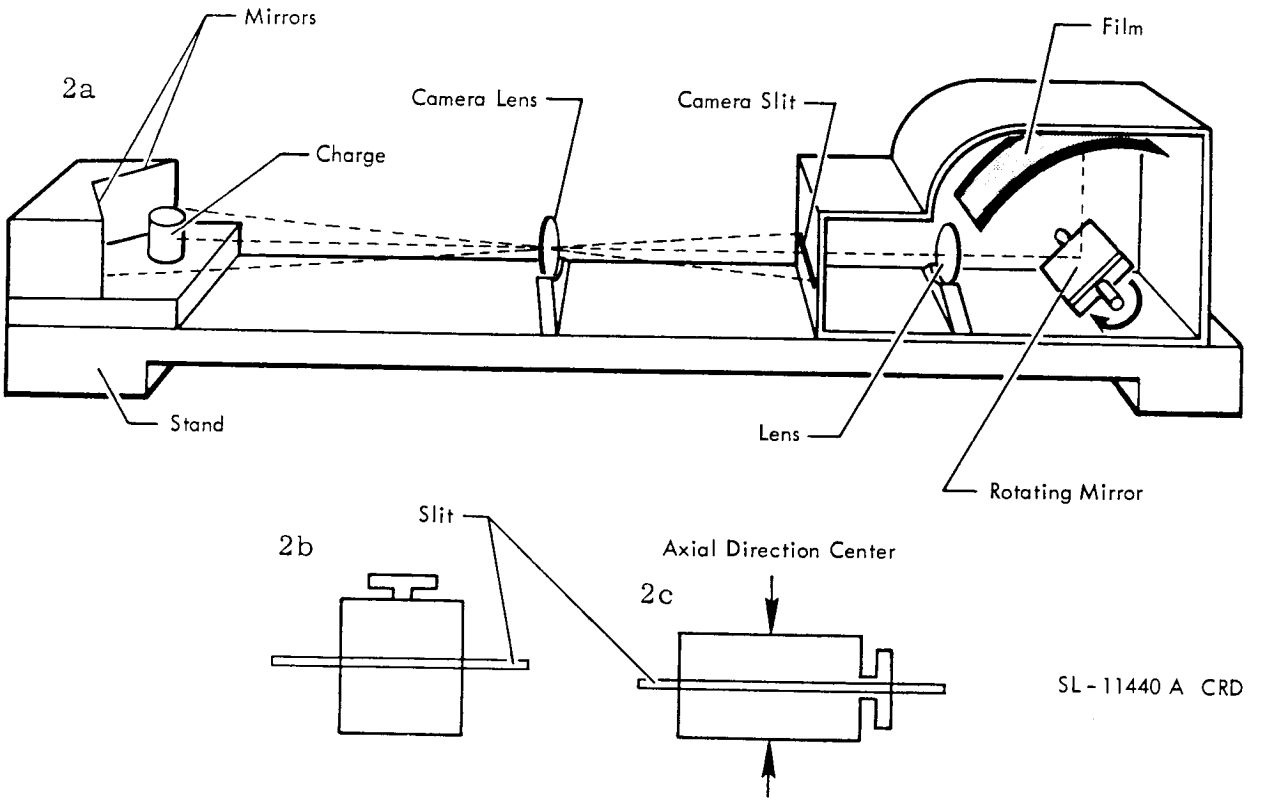

Figure 2. Test Setup

BREAKOUT PATTERN OF PBX 9404 EXPLOSIVE

Introduction

This experiment was the first in a series of tests designed to determine the breakout pattern of PBX 9404. Ideally, the breakout front should be completely straight and all points on the surface of the explosive charge should ignite simultaneously.

Description of Experiment

Test Items

Two types of charges (Figure 1) were assembled for the test. Both had a diameter of 1.273 inch. They differed in that one (K47977 Type 3) was 1/2-inch high and had end plates; the other (K47977 Type 7) was 1-inch high. A TC-134 high-energy detonator, a 0.2-inch diameter by 0.4-inch long anvil, and a bare 1-1/2 by 20-mil bridgewire used as a zero time reference were common to both units. The TC-134 detonators were placed into the charges so that breakout would first occur in the axial center direction.

Only one type of fixture (K58663) was required. Figure 2a shows the test setup. For determining radial breakout, the charges were placed upright as shown in Figure 2b. Axial breakout was measured when the charge was placed on its side (Figure 2c).

Instrumentation

An inline CVR was used to record the current input to the TC-134 detonators. Axial and radial simultaneities were recorded by a streak camera (Appendix A). A framing camera was used to illustrate the actual sequence of one breakout.

Data Reduction

Axial breakout times were determined directly from the streak camera negatives. Determination of radial breakout times was more complicated. In brief, the procedure was as follows: (1) a comparator was used to find time versus distance across the projected images of the charge; and (2) this data was fed into the 3600 DATA RED program; and (3) a tabulation of time versus angular position of the breakout front on the charge was obtained.

For a detailed description of the method, complete with typical input and output data, refer to Appendix B.

Results

Axial Breakout Times

Figures 3 and 4 show the breakout patterns in the axial direction for two 1/2-inch charges. Figure 5 shows the pattern for two 1-inch charges. Each illustration includes a scaled drawing showing the actual position of the detonator.

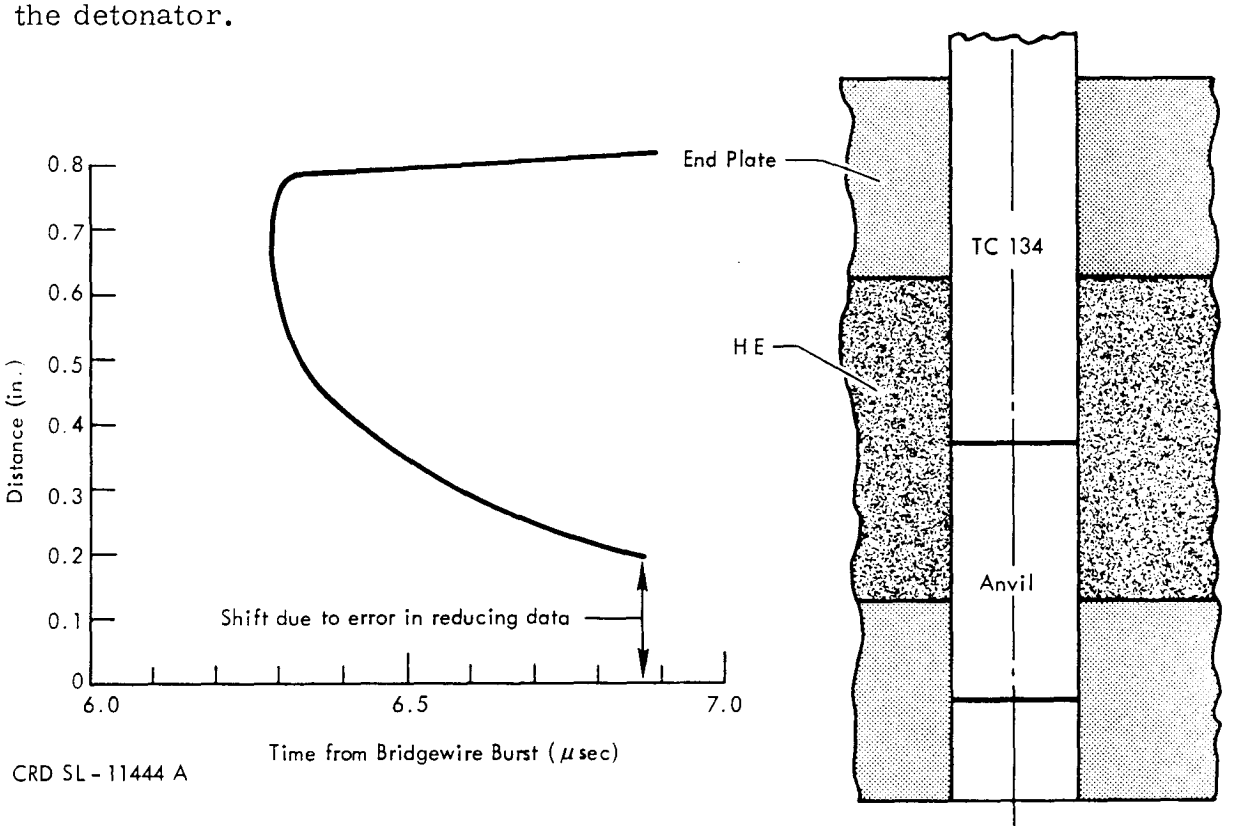

Figure 3. Lighting Time Versus Distance Along Charge

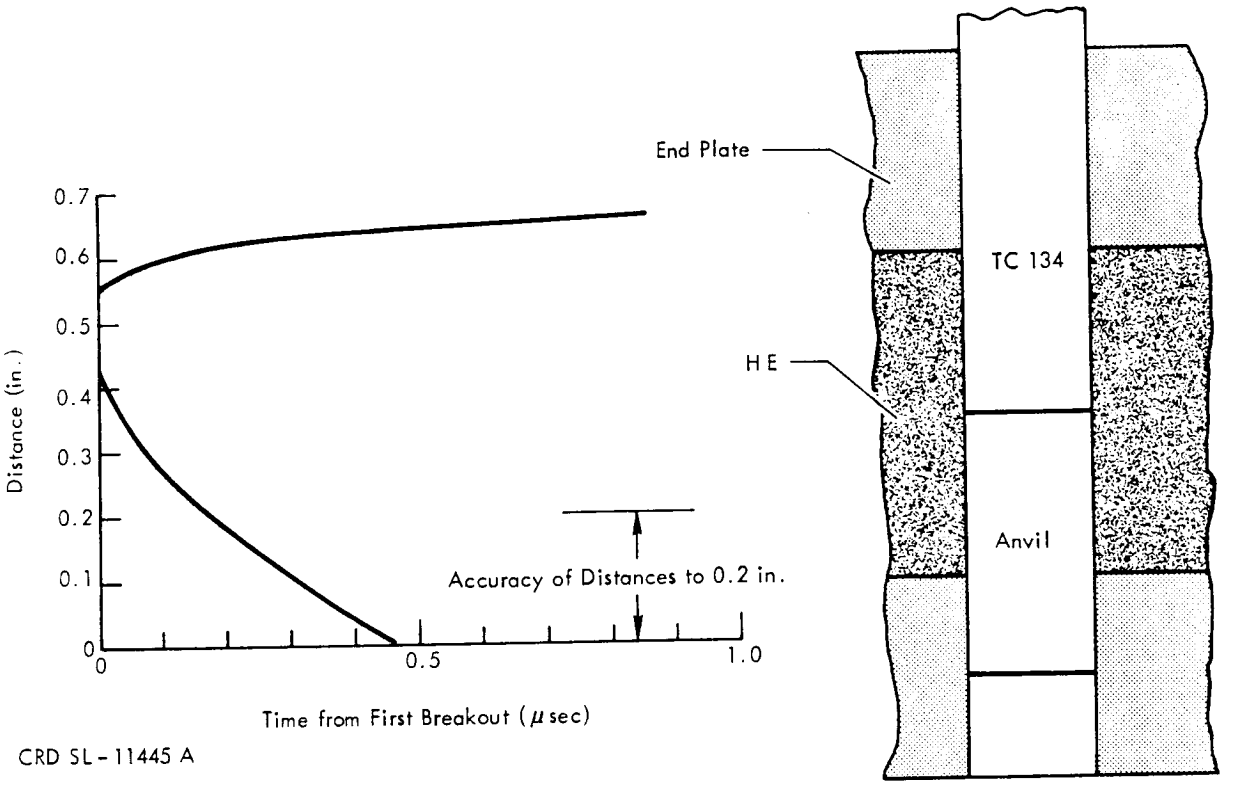

Figure 4. Lighting Time Versus Distance Along Charge

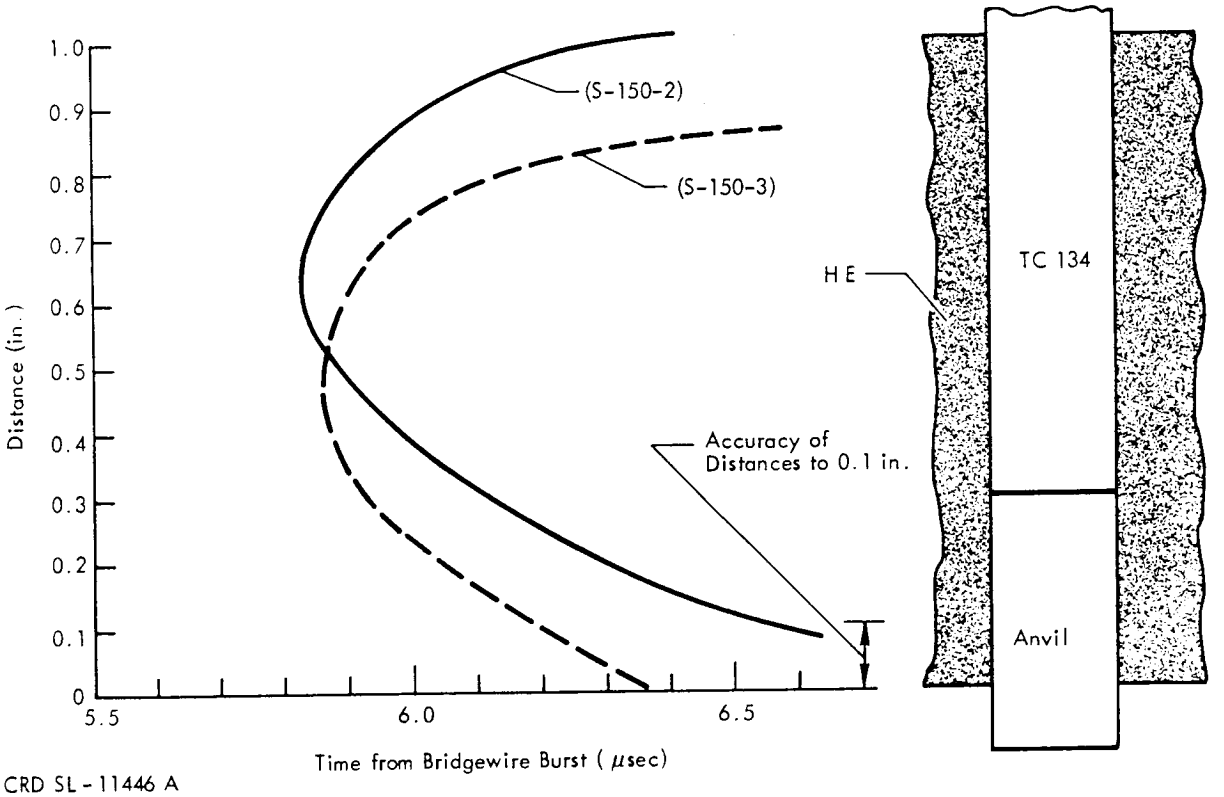

Figure 5. Lighting Time Versus Distance Along Charge

Half-Inch Charge -- The initial breakout point for the 1/2-inch charge was found to be at the end of the charge nearest the detonator. The continuation of the breakout pattern apparent in Figure 4 beyond the end of the actual charge may be caused by light reflecting off the end plates. If so, the time from bridgewire burst in the end-plate area (i.e., at distances over 0.5 inch in Figures 3 and 4) should be constant. This is true in Figure 3, but not in Figure 4, although test conditions were the same. There are two possible explanations for the apparent discrepancy:

(1) Light reflection in Figure 4 from only half of the end plate (the smaller diameter portion); or

(2) Errors in correlating the reflected lighting pattern with the corresponding position on the charge; that is, either

   (a) error arising from improper location of the edges of the charge because the contrast in the negatives was very slight; or

   (b) error in location of zero time because the streak for the bridgewire burst was not always directly below the still picture of the bridgewire.

Note that, if the curves in Figures 3 and 4 are superimposed and differences in time and distance values are disregarded, the similarity between the two patterns is quite apparent. Further investigation of the data has made it clear that (2) above is the most likely reason.

One-Inch Charge -- In Figure 5, data from tests of two 1-inch charges are plotted on the same scale. Note that the apparent shift is similar to that occurring in the results for the 1/2-inch charges.

For all three runs (Figures 3 and 5), axial breakout times occurred within 1 microsecond of each other.

Radial Breakout Times

Figures 6 and 7 contain smoothed curves plotted through the radial breakout times for a series of tests of the two types of charges.

Half-Inch Charge -- Figure 6 shows that, for a 1/2-inch charge, (a) the radial simultaneity is better than 0.2 μsec, and (b) the first breakout is closer to the detonator end of the charge.

One-Inch Charge -- Figure 7 shows that, for a 1-inch charge, (a) the radial simultaneity is better than 0.2 μsec and (b) the first breakout was within 0.25 inch of the detonator end of the charge.

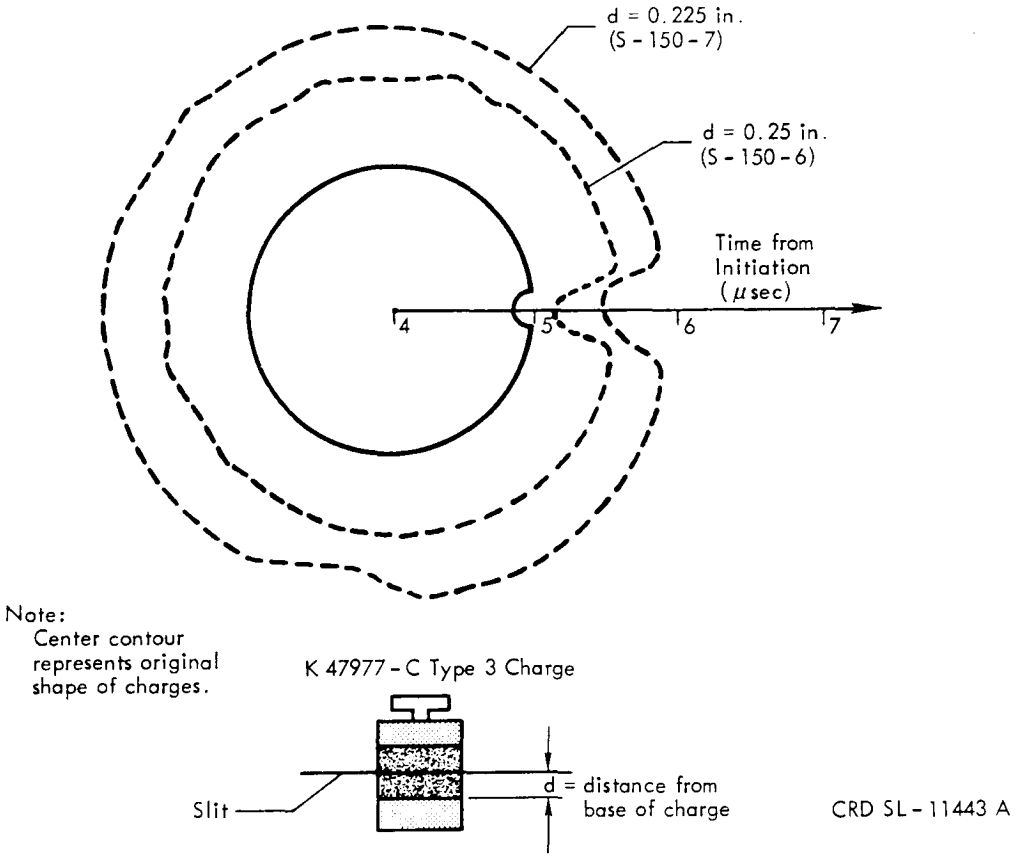

Figure 6. Breakout Pattern for One-Half-Inch Charge (showing breakout times at different axial planes)

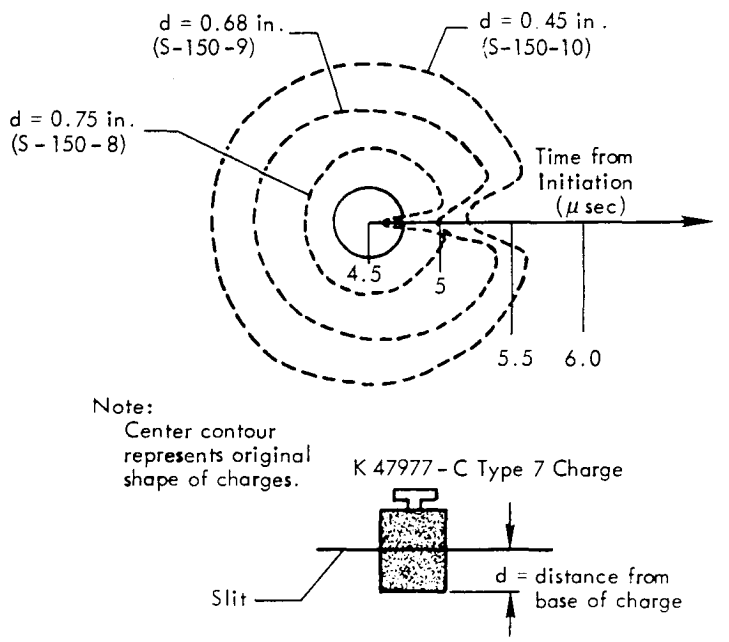

Figure 7. Breakout Pattern for One-Inch Charge (showing breakout times at different axial planes)

Comparison Between Axial and Radial Breakout Times

Comparison between Figures 6 and 7 reveals discrepancies in both breakout time (about 0.5 μsec) and breakout location. Figures 8 and 9 indicate that the difference in breakout time may be attributed to inadequate current input in the radial direction runs. That is, the transmission time between bridgewire burst and the TC134 is longer in Figure 8 (axial direction) than in Figure 9 (radial direction). The shift in the breakout point is illustrated in Figures 5 and 7. In the former, the first breakout point is near the center of the charge; in the latter it is within the quarter of the charge nearest to the detonator. The framing camera photographs included in Appendix A (Figures A-10 and A-11) give no exact timing information but do substantiate the accuracy of the breakout point shown in Figure 7. These photographs, taken of a 1.6-inch diameter by 0.5-inch-high notched charge 6 and 7 μsec after bridgewire burst, show that the first breakout occurred near the detonator end of the charge.

Future Experiments

The results of this series of tests suggested several changes in procedure* which should be incorporated into future experiments.

1. The end plates on the 0.5-inch charges should be painted so that they do not reflect light.

2. The time of the first breakout should be determined by placing the streak camera slit in the notch.

3. Greater accuracy should be provided by increasing the size of the image on the negative.

4. During reduction of the radial data, a quick check should be made to assure that the lighting pattern for the bridgewire burst lines up with the still picture of the bridgewire.

5. The test area should be better illuminated to improve the contrast of the negative (sometimes the edges of the charge are hard to distinguish) and/or the components should be painted in contrasting colors.

6. To avoid confusion during data reduction, the bridgewire should always be placed on the same side of the charge.

*Items 1, 2, 3, and 4 have been the subject of additional investigation since this series of tests was completed. Appendix C contains the conclusions reached.

7. To avoid guess-work during assembly of the experiment, each charge should be marked where the slit is to be placed.

8. An entirely new procedure, utilizing two mutually perpendicular slits, has been suggested which would enable the experimenter to use only one charge to obtain both axial and radial breakout information.

Conclusions

A photo- and data-collecting method has been established to successfully measure the axial and radial breakout times of explosive charges.

The breakout patterns for 0.5- and 1.0-inch high explosive charges are as follows:

Axial breakout times:	0.3 to 1.0 μsec.
Radial breakout times:	$\sim$0.2 μsec.

The preceding method could be used in investigating different methods of detonating the explosive charge; e.g., two TC-134 detonators, different detonators, or booster pellets could be used.

UNCLASSIFIED

[redacted]

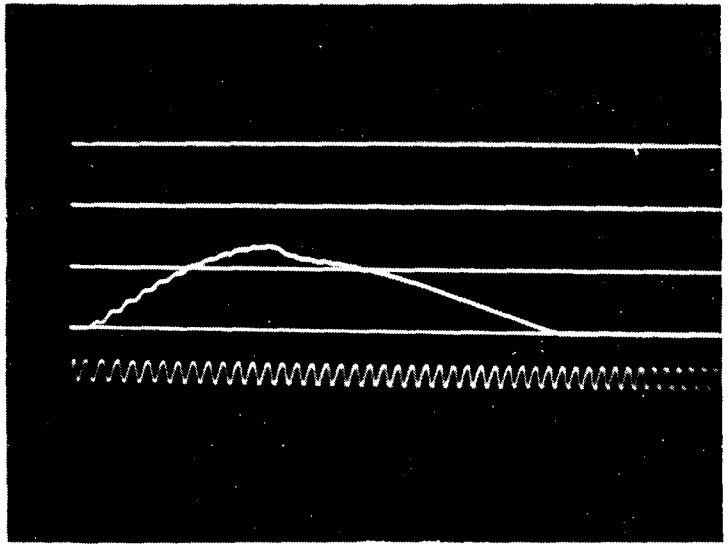

1/2-Inch Charges

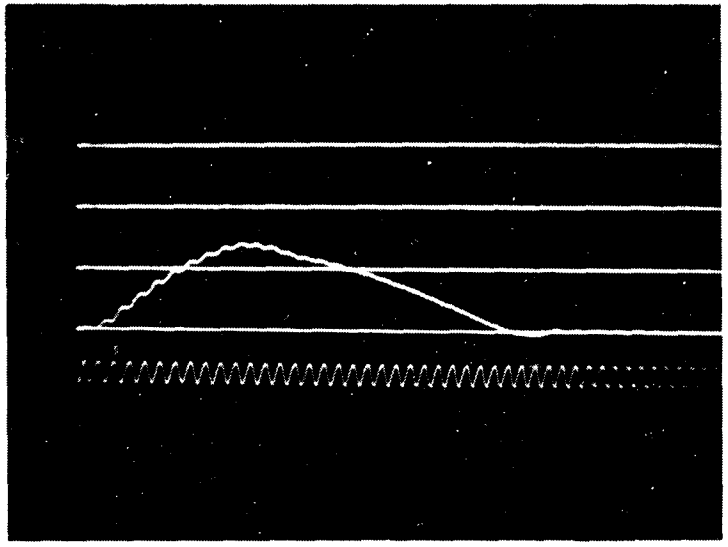

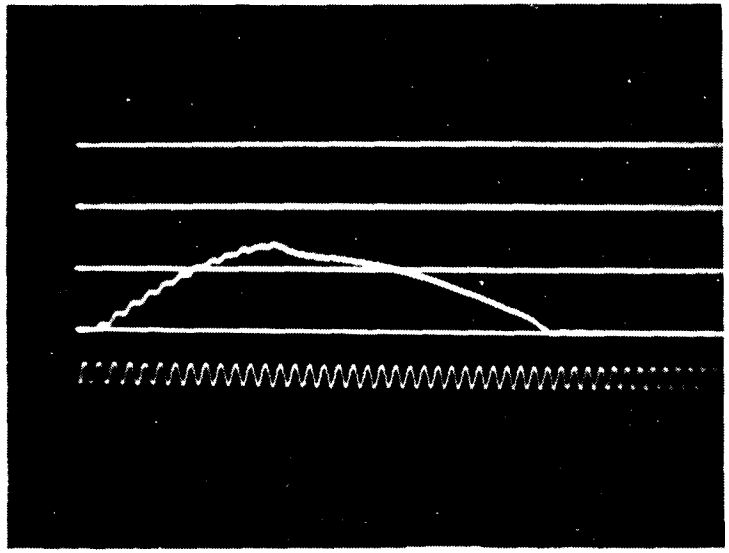

1-Inch Charges

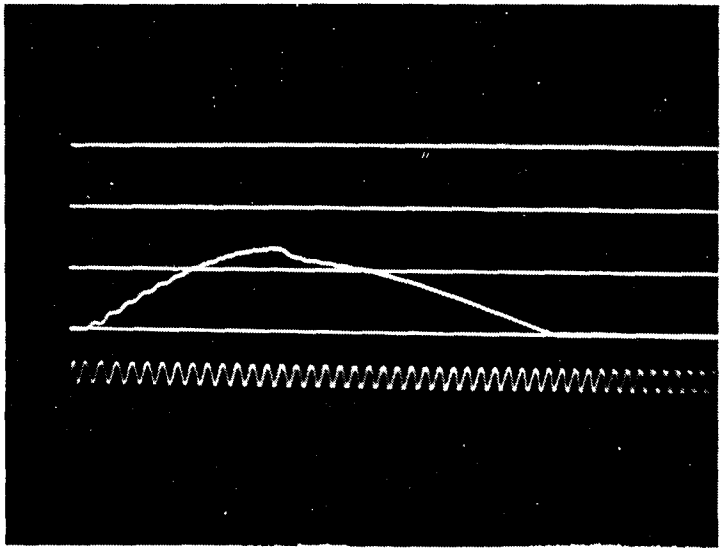

Figure 8. Current Input to TC 134 (axial breakout)

UNCLASSIFIED

[redacted]

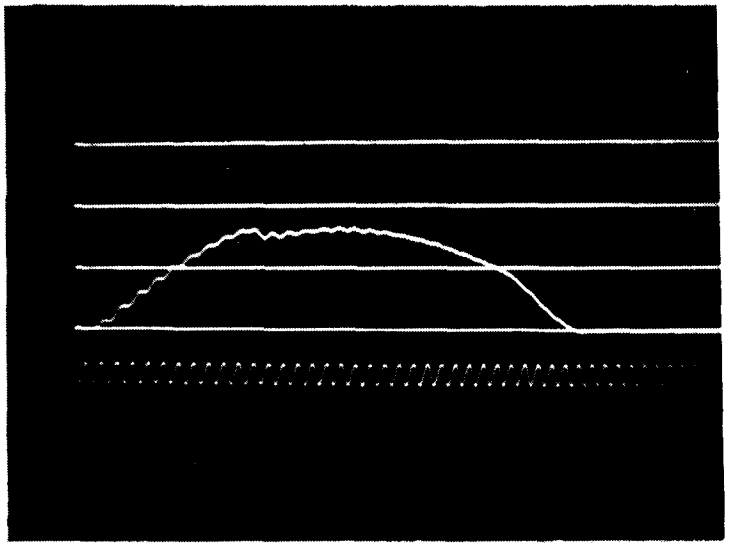

1/2-Inch Charges

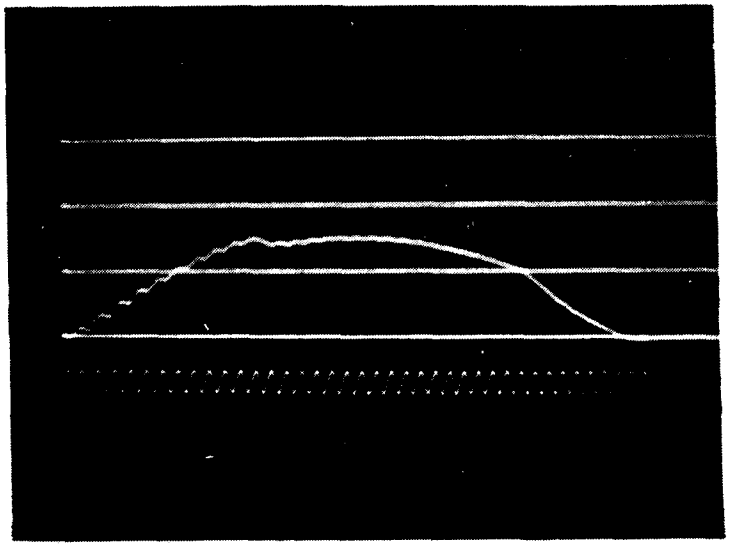

Figure 9. Current Input to TC 134 (radial breakout)

UNCLASSIFIED

[redacted]

UNCLASSIFIED

UNCLASSIFIED

1-Inch Charges

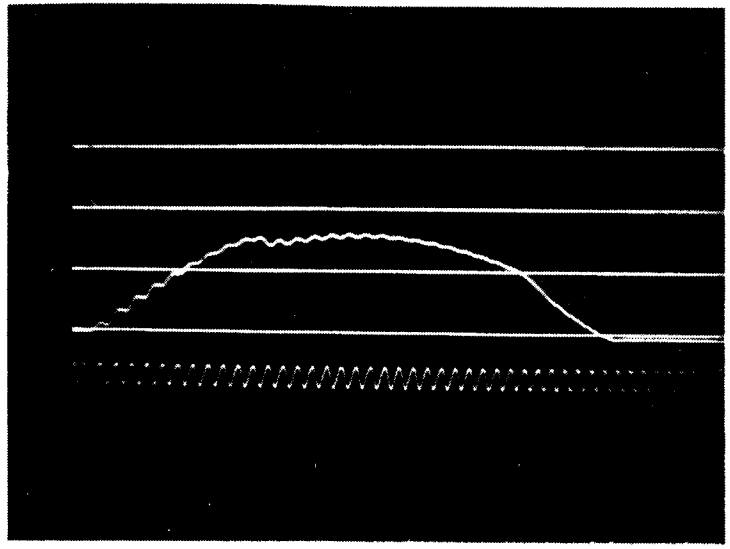

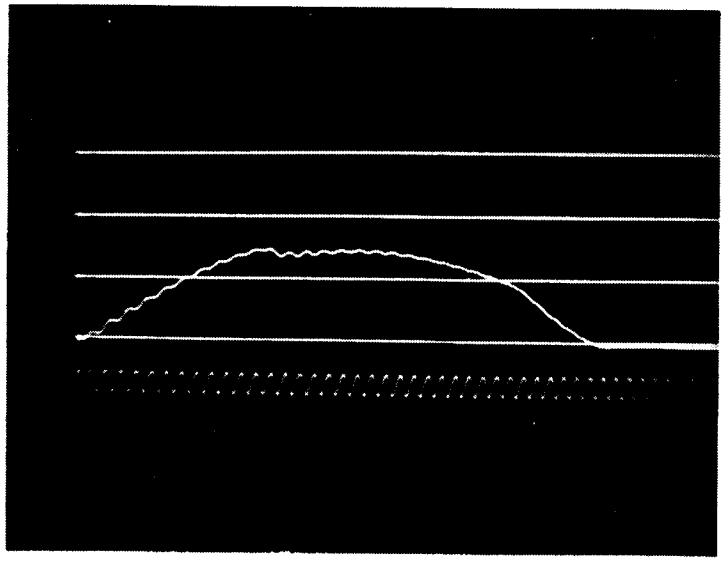

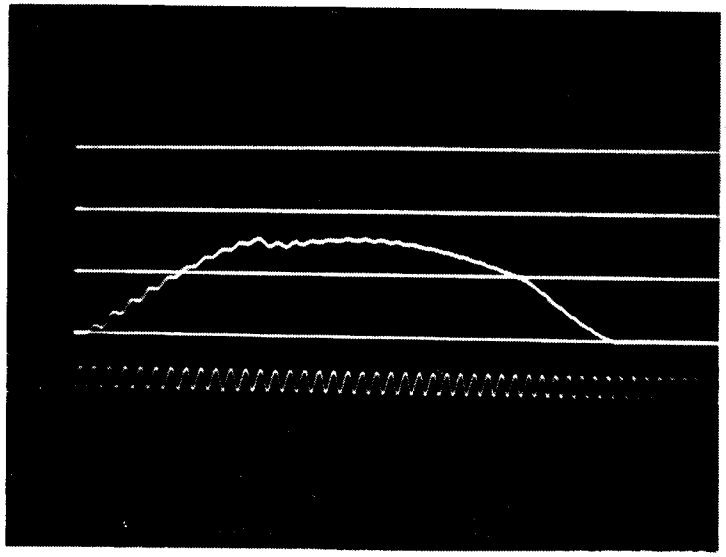

Figure 9. Current Input to TC 134 (radial breakout) (Continued)

UNCLASSIFIED

APPENDIX A -- STREAK CAMERA PHOTOGRAPHS

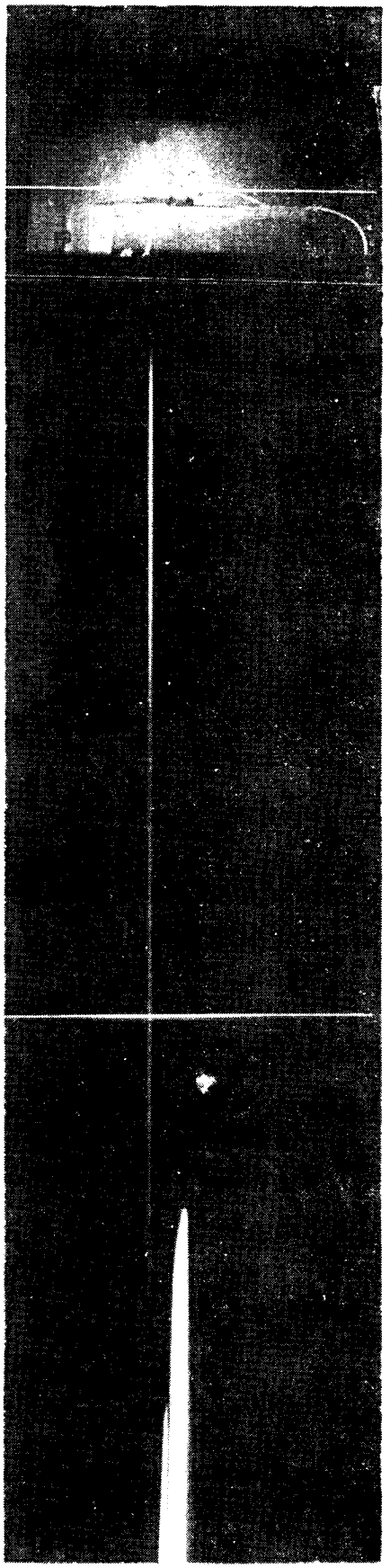

Figure A-1

K47977 Type 3, 1.3-inch dia. x 1/2-inch high charge with end plates.
Breakout pattern along axial direction.

[redacted]

UNCLASSIFIED

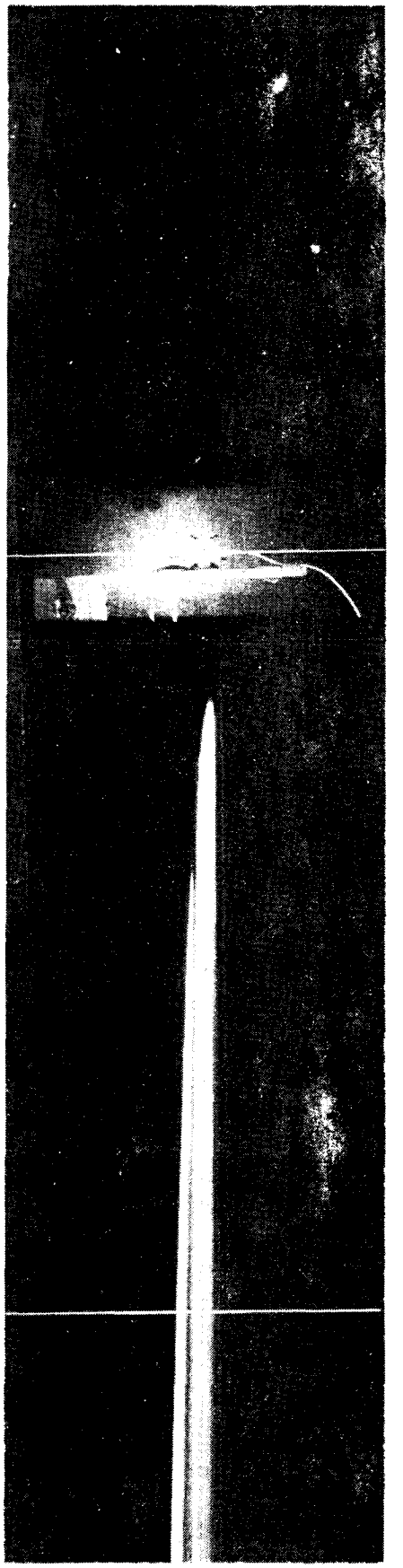

Figure A-2

K47977 Type 3, 1.3-inch dia. x 1/2-inch high charge with end plates.
Breakout pattern along axial direction.

UNCLASSIFIED

[redacted]

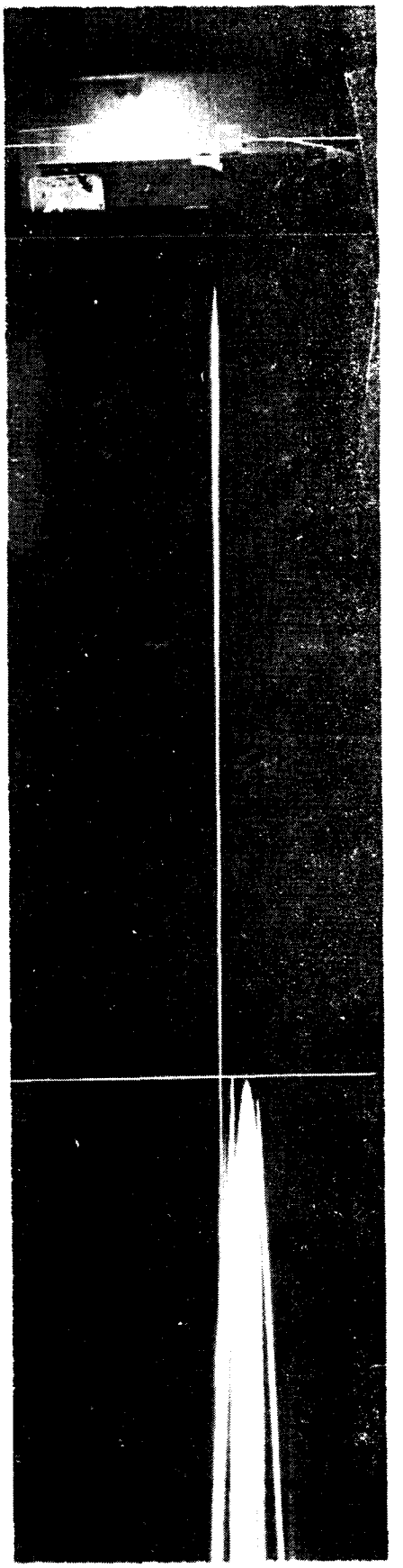

Figure A-3

K47977 Type 7, 1.3-inch dia. x 1-inch high charge.
Breakout pattern along axial direction.

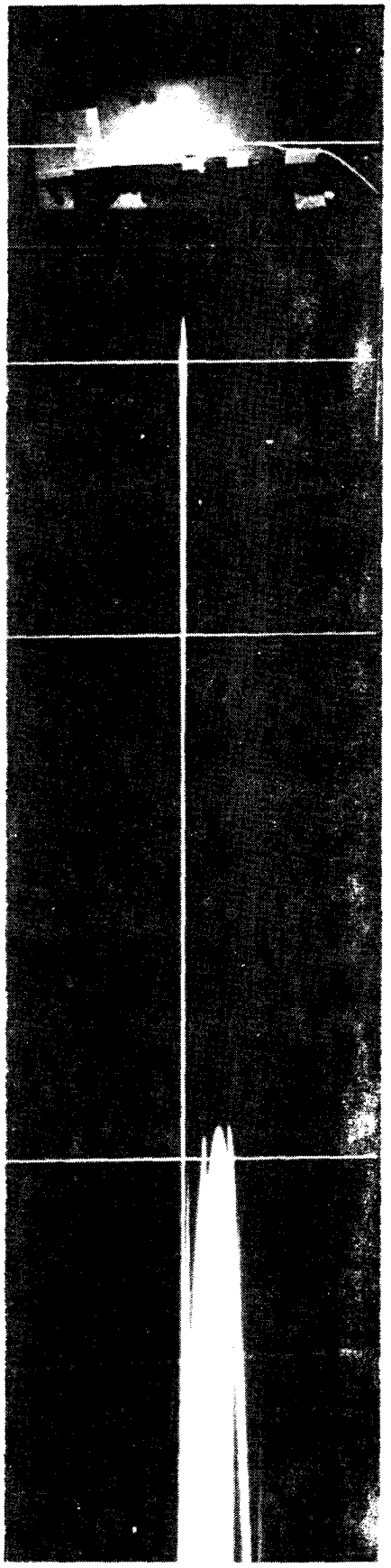

Figure A-4

K47977 Type 7, 1.3-inch dia. x 1-inch high charge.
Breakout pattern along axial direction.

[redacted]

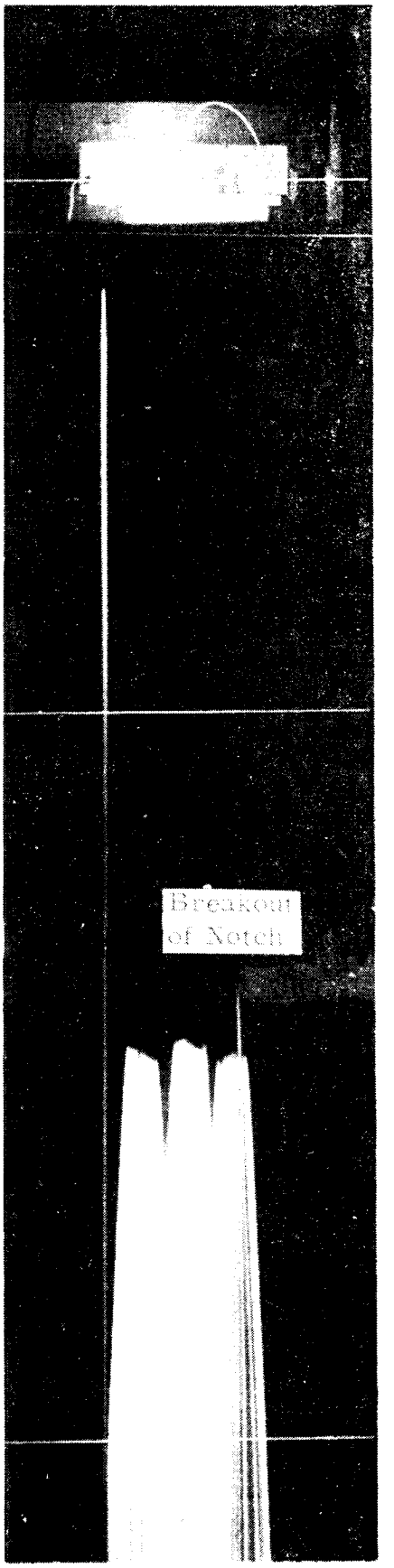

Figure A-5

K47977 Type 3, 1.3-inch dia. x 1/2-inch high charge with end plates.
Radial breakout with slit positioned half-way down the charge.

[redacted]

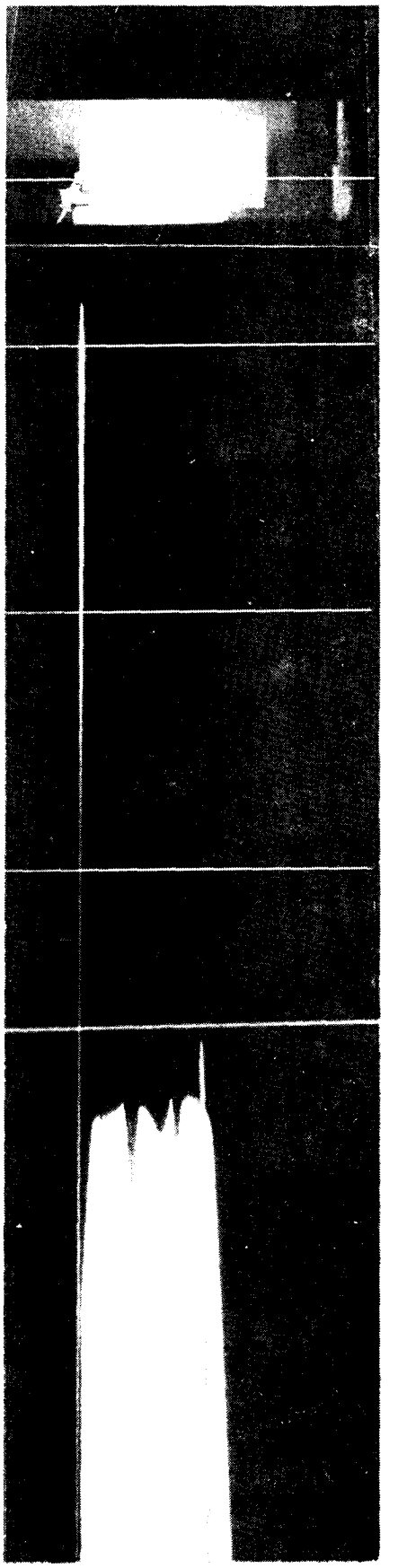

Figure A-6

K47977 Type 3, 1.3-inch dia. x 1/2-inch high charge with end plates.
Radial breakout with slit positioned half-way down the charge.

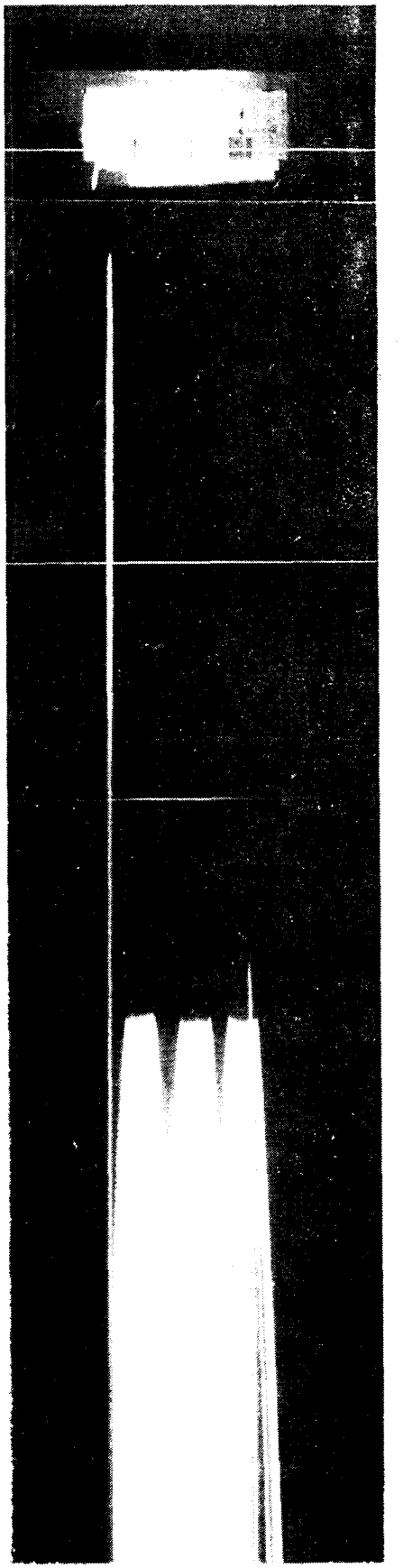

Figure A-7

K47977 Type 7, 1.3-inch dia. x 1-inch high charge.
Radial breakout with slit positioned half-way down the charge.

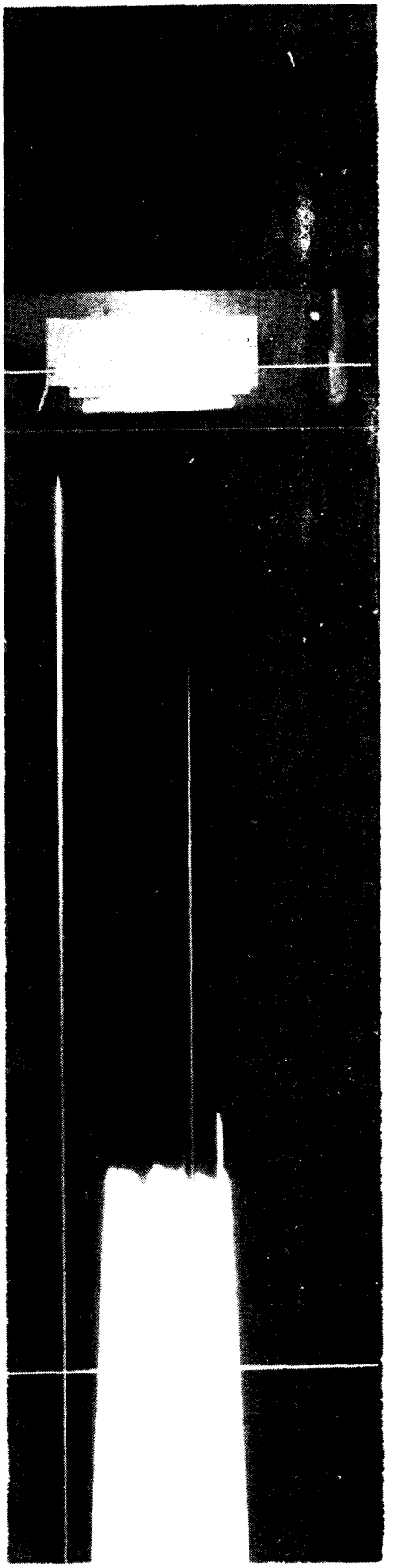

Figure A-8

K47977 Type 7, 1.3-inch dia. x 1-inch high charge.
Radial breakout with slit positioned one-fourth of the way down the charge from the detonator end.

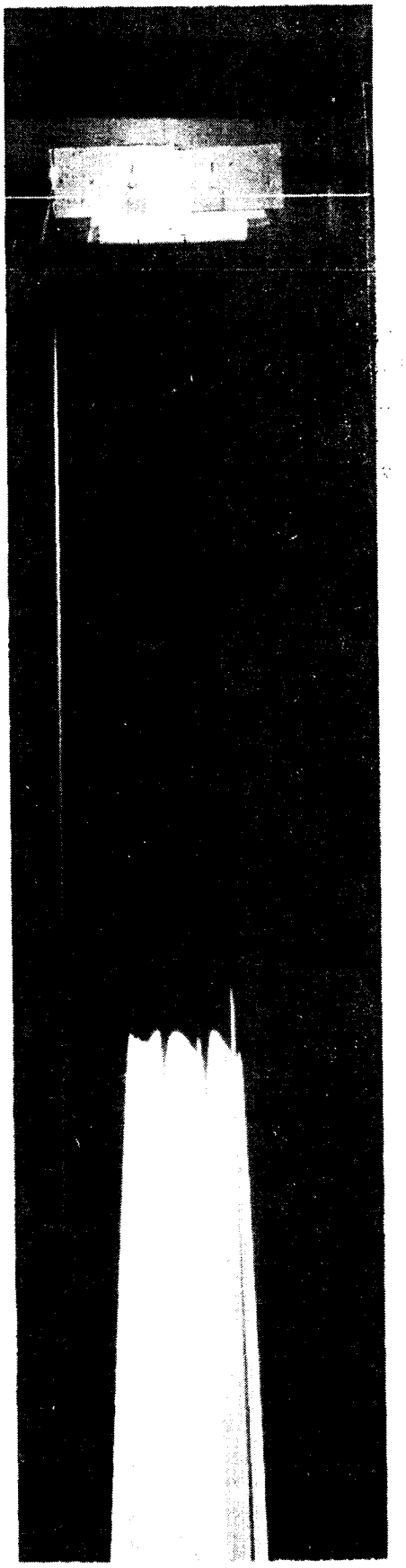

Figure A-9

K47977 Type 7, 1.3-inch dia. x 1-inch high charge.
Radial breakout with slit positioned one-fourth of the way down the charge from the detonator end.

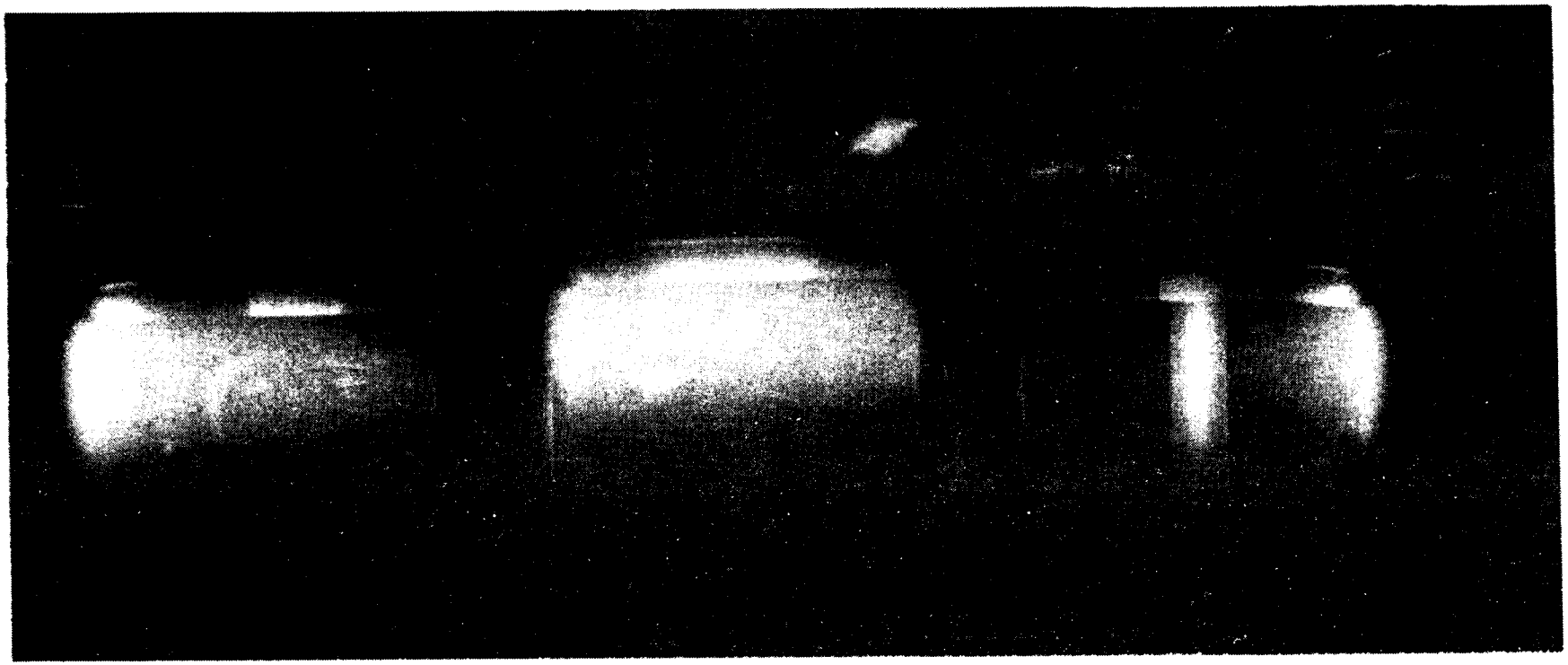

Figure A-10. K47977 1.6-inch dia x 1/2-inch high (notched).
Framing camera picture 6 microseconds after bridgewire burst.

UNCLASSIFIED

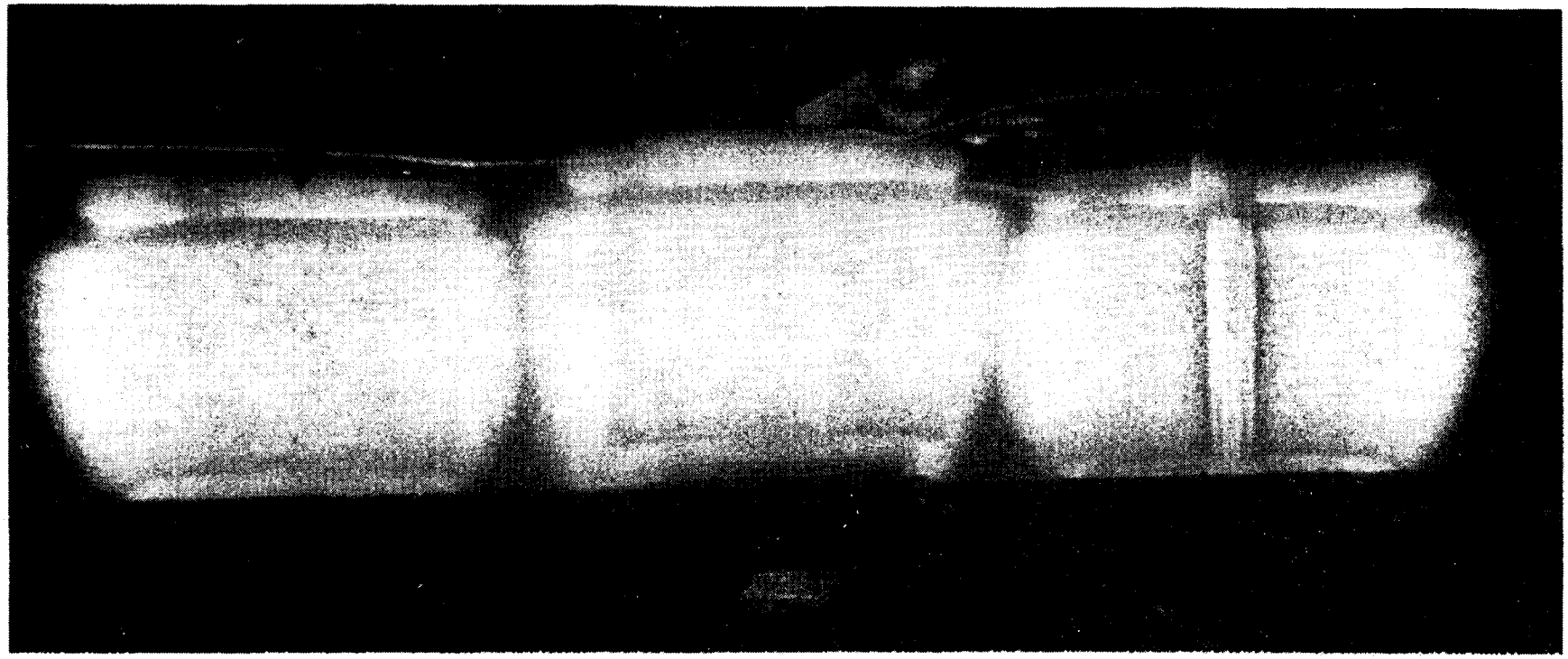

Figure A-11. K47977 1.6-inch dia. x 1/2-inch high (notched).
Framing camera picture 7 microseconds after bridgewire burst.

UNCLASSIFIED

APPENDIX B -- REDUCTION OF DATA FOR RADIAL BREAKOUT

REDUCTION OF DATA FOR RADIAL BREAKOUT

Data reduction will interpret the negative in the following way:

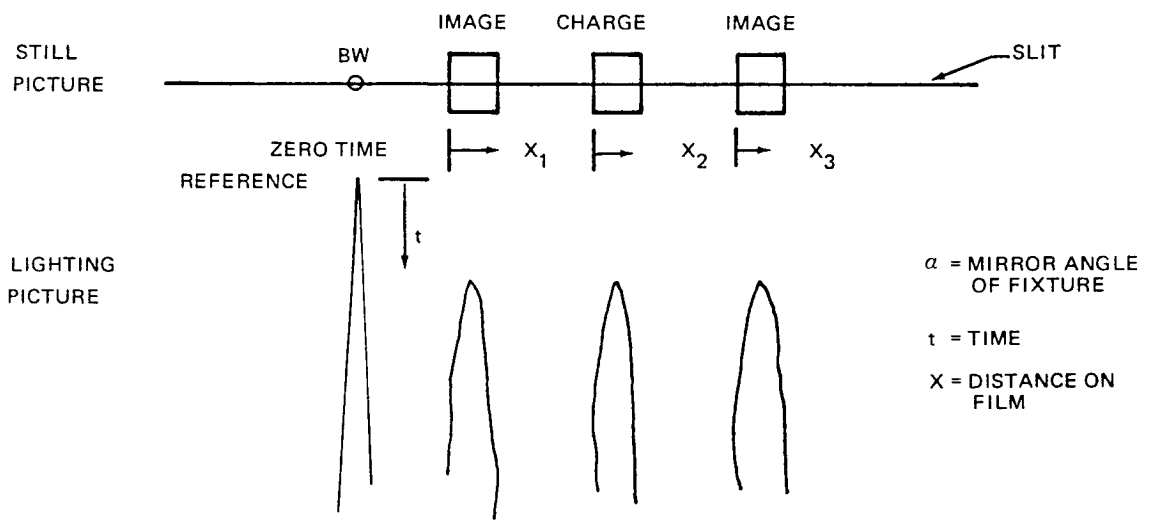

Data reduction will provide a listing of X_1, X_2, and X_3 versus time for each film.

The data will then be placed into the computer program DATA RED to get the final results. The basic equations used are derived below.

By geometry:

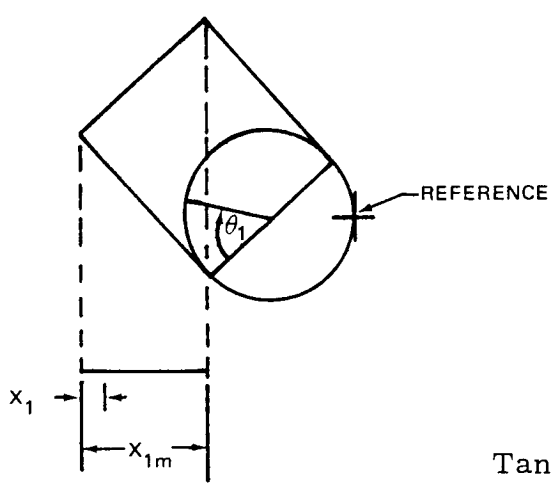

$$\tan \theta_1 = \frac{\sqrt{X_1 X_{1m} - X_1^2}}{\frac{X_{1m}}{2} - X_1} \qquad X_1 < \frac{X_{1m}}{2}$$

$$\theta_1 = 90° \qquad X_1 = \frac{X_{1m}}{2}$$

$$\tan (180 - \theta_1) = \frac{\sqrt{X_1 X_{1m} - X_1^2}}{X_1 - \frac{X_{1m}}{2}} \qquad X_1 > \frac{X_{1m}}{2}$$

Referencing the θ_1 angle to the reference shown above, and calling angle β

$$\beta_1 = 90 + \frac{\alpha}{2} + \theta_1$$

Similarly, θ_2 and θ_3 can be derived in the same manner with only the subscripts on the X's changed.

Then

$$\beta_2 = 180 - \theta_2$$

and

$$\beta_3 = \theta_3 - 90 + \frac{\alpha}{2}$$

The fixtures used had $\alpha = 110°$,

thus

$$\left.\begin{aligned} \beta_1 &= \theta_1 + 145° \\ \beta_2 &= 180° - \theta_2 \\ \beta_3 &= \theta_3 - 145° \end{aligned}\right\}$$

β versus time obtained from DATA RED program

Data Reduction Program (3600)

```
'JOB,640.810.52,DATA , 2,T,UNC,E15251,8155,                LUCKE
'FTN,X,L
C  THE FOLLOWING EXAMPLE PROGRAM IS FOR 5 RUNS OF DATA, EACH RUN CONTAIN
C     ING AT MOST 20 DIFFERENT DATA POINTS.
      PROGRAM DATA RED
      DIMENSION X1(8,25),X2(8,25),X3(8,25),XMAX1(8,25),XMAX2(8,25),XMAX3
     1(8,25),T1(8,25),T2(8,25),T3(8,25),THETA1(8,25),THETA2(8,25),THETA3
     2(8,25),BETA1(8,25),BETA2(8,25),BETA3(8,25),A(8,25),B(8,25),C(8,25)
     3,VX1(8,25),VX2(8,25),VX3(8,25)
C  READ INPUT DATA
      READ 500,(XMAX1(IA,1),IA=1,5)
      READ 500,(XMAX2(IB,1),IB=1,5)
      READ 500,(XMAX3(IC,1),IC=1,5)
C  RUN 1
      READ 501,(X1(1,I1),I1=1,20)
      READ 501,(X2(1,I2),I2=1,20)
      READ 501,(X3(1,I3),I3=1,20)
      READ 601,(T1(1,I4),I4=1,20)
      READ 601,(T2(1,I5),I5=1,20)
      READ 601,(T3(1,I6),I6=1,20)
C  RUN 2
      READ 501,(X1(2,J1),J1=1,20)
      READ 501,(X2(2,J2),J2=1,20)
      READ 501,(X3(2,J3),J3=1,20)
      READ 601,(T1(2,J4),J4=1,20)
      READ 601,(T2(2,J5),J5=1,20)
      READ 601,(T3(2,J6),J6=1,20)
C  RUN 3
      READ 501,(X1(3,K1),K1=1,20)
      READ 501,(X2(3,K2),K2=1,20)
      READ 501,(X3(3,K3),K3=1,20)
      READ 601,(T1(3,K4),K4=1,20)
      READ 601,(T2(3,K5),K5=1,20)
      READ 601,(T3(3,K6),K6=1,20)
C  RUN 4
      READ 501,(X1(4,L1),L1=1,20)
      READ 501,(X2(4,L2),L2=1,20)
      READ 501,(X3(4,L3),L3=1,20)
      READ 601,(T1(4,L4),L4=1,20)
      READ 601,(T2(4,L5),L5=1,20)
```

PAGE 001 DATE 9/26/67

```
      READ 601,(T3(4,L6),L6=1,20)
C  RUN 5
      READ 501,(X1(5,M1),M1=1,20)
      READ 501,(X2(5,M2),M2=1,20)
      READ 501,(X3(5,M3),M3=1,20)
      READ 601,(T1(5,M4),M4=1,20)
      READ 601,(T2(5,M5),M5=1,20)
      READ 601,(T3(5,M6),M6=1,20)
C  CALCULATE OUTPUT DATA
      K=1
    5 DO 7 I=1,5
    6 DO 7 J=1,20
      IF(X1(I,J)-XMAX1(I,K)/2.0)80,81,80
   81 THETA1(I,J)=90.0
      GO TO 15
   80 VX1(I,J)=X1(I,J)*(XMAX1(I,K)-X1(I,J))
      A(I,J)=SQRTF(VX1(I,J))/(ABSF(XMAX1(I,K)/2.0-X1(I,J)))
      IF(X1(I,J)-XMAX1(I,K)/2.0)10,10,11
   10 THETA1(I,J)=(180.0/3.1416)*ATANF(A(I,J))
      GO TO 15
   11 THETA1(I,J)=180.0-(180.0/3.1416)*ATANF(A(I,J))
   15 ALPHA=110.0
      BETA1(I,J)=90.0+ALPHA/2.0+THETA1(I,J)
      IF(X2(I,J)-XMAX2(I,K)/2.0)180,181,180
  181 THETA2(I,J)=90.0
      GO TO 25
  180 VX2(I,J)=X2(I,J)*(XMAX2(I,K)-X2(I,J))
      B(I,J)=SQRTF(VX2(I,J))/(ABSF(XMAX2(I,K)/2.0-X2(I,J)))
      IF(X2(I,J)-XMAX2(I,K)/2.0)20,20,21
   20 THETA2(I,J)=(180.0/3.1416)*ATANF(B(I,J))
      GO TO 25
   21 THETA2(I,J)=180.0-(180.0/3.1416)*ATANF(B(I,J))
   25 BETA2(I,J)=180.0-THETA2(I,J)
      IF(X3(I,J)-XMAX3(I,K)/2.0)280,281,280
  281 THETA3(I,J)=90.0
      GO TO 35
  280 VX3(I,J)=X3(I,J)*(XMAX3(I,K)-X3(I,J))
      C(I,J)=SQRTF(VX3(I,J))/(ABSF(XMAX3(I,K)/2.0-X3(I,J)))
      IF(X3(I,J)-XMAX3(I,K)/2.0)30,30,31
   30 THETA3(I,J)=(180.0/3.1416)*ATANF(C(I,J))
      GO TO 35
   31 THETA3(I,J)=180.0-(180.0/3.1416)*ATANF(C(I,J))
   35 BETA3(I,J)=THETA3(I,J)-90.0-ALPHA/2.0
  500 FORMAT(5F5.0)
```

[redacted]

UNCLASSIFIED

```
  501 FORMAT(10F5.0)
  601 FORMAT(8F10.3)
    7 CONTINUE
C  PRINT OUTPUT DATA
C  RUN 1
      PRINT 160
  160 FORMAT(1H1,/46X,27HRUN 1, ONE HALF INCH CHARGE/40X,37HBETA IN DEGR
     1EES AND T IN MICROSECONDS//6X,1HN,11X,8HBETA1(1),9X,5HT1(1),8X,8HB
     2ETA2(1),9X,5HT2(1),8X,8HBETA3(1),9X,5HT3(1)//)
      DO 200 N=1,20
  200 PRINT 161,N,BETA1(1,N),T1(1,N),BETA2(1,N),T2(1,N),BETA3(1,N),T3(1,
     1N)
C  RUN 2
      PRINT 162
  162 FORMAT(1H1,/46X,27HRUN 2, ONE HALF INCH CHARGE/40X,37HBETA IN DEGR
     1EES AND T IN MICROSECONDS//6X,1HN,11X,8HBETA1(2),9X,5HT1(2),8X,8HB
     2ETA2(2),9X,5HT2(2),8X,8HBETA3(2),9X,5HT3(2)//)
      DO 201 N1=1,20
  201 PRINT 161,N1,BETA1(2,N1),T1(2,N1),BETA2(2,N1),T2(2,N1),BETA3(2,N1)
     1,T3(2,N1)
C  RUN 3
      PRINT 164
  164 FORMAT(1H1,/46X,27HRUN 3, ONE INCH HIGH CHARGE/40X,37HBETA IN DEGR
     1EES AND T IN MICROSECONDS//6X,1HN,11X,8HBETA1(3),9X,5HT1(3),8X,8HB
     2ETA2(3),9X,5HT2(3),8X,8HBETA3(3),9X,5HT3(3)//)
      DO 202 N2=1,20
  202 PRINT 161,N2,BETA1(3,N2),T1(3,N2),BETA2(3,N2),T2(3,N2),BETA3(3,N2)
     1,T3(3,N2)
C  RUN 4
      PRINT 166
  166 FORMAT(1H1,/46X,27HRUN 4, ONE INCH HIGH CHARGE/40X,37HBETA IN DEGR
     1EES AND T IN MICROSECONDS//6X,1HN,11X,8HBETA1(4),9X,5HT1(4),8X,8HB
     2ETA2(4),9X,5HT2(4),8X,8HBETA3(4),9X,5HT3(4)//)
      DO 203 N3=1,20
  203 PRINT 161,N3,BETA1(4,N3),T1(4,N3),BETA2(4,N3),T2(4,N3),BETA3(4,N3)
     1,T3(4,N3)
C  RUN 5
      PRINT 168
  168 FORMAT(1H1,/46X,27HRUN 5, ONE INCH HIGH CHARGE/40X,37HBETA IN DEGR
     1EES AND T IN MICROSECONDS//6X,1HN,11X,8HBETA1(5),9X,5HT1(5),8X,8HB
     2ETA2(5),9X,5HT2(5),8X,8HBETA3(5),9X,5HT3(5)//)
      DO 204 N4=1,20
  204 PRINT 161,N4,BETA1(5,N4),T1(5,N4),BETA2(5,N4),T2(5,N4),BETA3(5,N4)
     1,T3(5,N4)
```


UNCLASSIFIED

[redacted]

```
  161 FORMAT(I7,F18.3,5F15.3)
      END
         SCOPE
'LOAD
'RUN,  2,5000,2
C  DATA DECK WOULD NORMALLY START HERE.


C  ALSO THE FOLLOWING TWO PRINTOUTS CAN BE ADDED IF IT IS DESIRED.
C  PRINT INPUT DATA
C  RUN 1
      PRINT 700
  700 FORMAT(1H1,2X,5HRUN 1,2X,1HN,8X,5HXMAX1,2X,5HXMAX2,2X,5HXMAX3,3X,2
     1HX1,3X,2HX2,3X,2HX3,5X,2HT1,5X,2HT2,5X,2HT3///)
      PRINT 701,(MA,XMAX1(1,1),XMAX2(1,1),XMAX3(1,1),X1(1,MA),X2(1,MA),X
     13(1,MA),T1(1,MA),T2(1,MA),T3(1,MA),MA=1,20)
C  RUN 2
      PRINT 702
  702 FORMAT(1H1,2X,5HRUN 2,2X,1HN,8X,5HXMAX1,2X,5HXMAX2,2X,5HXMAX3,3X,2
     1HX1,3X,2HX2,3X,2HX3,5X,2HT1,5X,2HT2,5X,2HT3///)
      PRINT 701,(MB,XMAX1(2,1),XMAX2(2,1),XMAX3(2,1),X1(2,MB),X2(2,MB),X
     13(2,MB),T1(2,MB),T2(2,MB),T3(2,MB),MB=1,20)
C  RUN 3
      PRINT 704
  704 FORMAT(1H1,2X,5HRUN 3,2X,1HN,8X,5HXMAX1,2X,5HXMAX2,2X,5HXMAX3,3X,2
     1HX1,3X,2HX2,3X,2HX3,5X,2HT1,5X,2HT2,5X,2HT3///)
      PRINT 701,(MC,XMAX1(3,1),XMAX2(3,1),XMAX3(3,1),X1(3,MC),X2(3,MC),X
     13(3,MC),T1(3,MC),T2(3,MC),T3(3,MC),MC=1,20)
C  RUN 4
      PRINT 706
  706 FORMAT(1H1,2X,5HRUN 4,2X,1HN,8X,5HXMAX1,2X,5HXMAX2,2X,5HXMAX3,3X,2
     1HX1,3X,2HX2,3X,2HX3,5X,2HT1,5X,2HT2,5X,2HT3///)
      PRINT 701,(MD,XMAX1(4,1),XMAX2(4,1),XMAX3(4,1),X1(4,MD),X2(4,MD),X
     13(4,MD),T1(4,MD),T2(4,MD),T3(4,MD),MD=1,20)
C  RUN 5
      PRINT 708
  708 FORMAT(1H1,2X,5HRUN 5,2X,1HN,8X,5HXMAX1,2X,5HXMAX2,2X,5HXMAX3,3X,2
     1HX1,3X,2HX2,3X,2HX3,5X,2HT1,5X,2HT2,5X,2HT3///)
      PRINT 701,(ME,XMAX1(5,1),XMAX2(5,1),XMAX3(5,1),X1(5,ME),X2(5,ME),X
     13(5,ME),T1(5,ME),T2(5,ME),T3(5,ME),ME=1,20)
  701 FORMAT(I10,F12.0,3F7.0,2F5.0,3F7.3)
C  VALIDITY OF DATA
      PRINT 1000
 1000 FORMAT(1H1,/46X,16HVALIDITY OF DATA//23X,4HA(1),16X,4HA(2),16X,4HA
```

[redacted]

UNCLASSIFIED

```
     1(3),16X,4HA(4),16X,4HA(5))
      PRINT 1100,((A(IL,JL),IL=1,5),JL=1,20)
      PRINT 2000
 2000 FORMAT(1H1,23X,4HB(1),16X,4HB(2),16X,4HB(3),16X,4HB(4),16X,4HB(5))
      PRINT 1100,((B(IM,JM),IM=1,5),JM=1,20)
      PRINT 3000
 3000 FORMAT(1H1,23X,4HC(1),16X,4HC(2),16X,4HC(3),16X,4HC(4),16X,4HC(5))
      PRINT 1100,((C(IN,JN),IN=1,5),JN=1,20)
 1100 FORMAT(F30.3,4F20.3)
```

PAGE 005 DATE 9/26/67 FINIS

UNCLASSIFIED

[redacted]

Sample of Output Data

-J-N-C-L-A-S-S-I-F-I-E-D- -U-N-C-L-A-S-S-I-F-I-E-D- LUCKE

RUN 1, ONE HALF INCH CHARGE
BETA IN DEGREES AND T IN MICROSECONDS

N	BETA1(1)	T1(1)	BETA2(1)	T2(1)	BETA3(1)	T3(1)
1	145,000	5,600	180,000	5,545	-145,000	5,715
2	167,694	5,556	155,461	5,530	-131,955	5,689
3	188,195	5,561	134,686	5,517	-120,461	5,665
4	208,566	5,576	121,506	5,504	-101,805	5,651
5	217,348	5,587	103,050	5,507	-95,663	5,729
6	224,968	5,578	90,370	5,516	-90,043	5,656
7	232,411	5,655	77,707	5,533	-77,374	5,636
8	237,589	5,590	66,018	5,546	-67,293	5,628
9	242,787	5,581	54,957	5,559	-58,329	5,613
10	255,784	5,606	39,848	5,574	-50,189	5,600
11	265,642	5,620	0,000	5,578	-37,348	5,590
12	279,686	5,634	0,000	5,578	-19,957	5,599
13	295,571	5,646	0,000	5,578	-16,258	5,148
14	325,000	5,650	0,000	5,578	12,306	5,617
15	325,000	5,650	0,000	5,578	35,000	5,619
16	325,000	5,650	0,000	5,578	35,000	5,619
17	325,000	5,650	0,000	5,578	35,000	5,619
18	325,000	5,650	0,000	5,578	35,000	5,619
19	325,000	5,650	0,000	5,578	35,000	5,619
20	325,000	5,650	0,000	5,578	35,000	5,619

[redacted]

UNCLASSIFIED

[redacted]

UNCLASSIFIED

Sample of Output Data

-J-N-C-L-A-S-S-I-F-I-E-D- -U-N-C-L-A-S-S-I-F-I-E-D- LUCKE

RUN 1, ONE HALF INCH CHARGE
BETA IN DEGREES AND T IN MICROSECONDS

N	BETA1(1)	T1(1)	BETA2(1)	T2(1)	BETA3(1)	T3(1)
1	145,000	5,600	180,000	5,545	-145,000	5,715
2	167,694	5,556	155,461	5,530	-131,955	5,689
3	188,195	5,561	134,686	5,517	-120,461	5,665
4	208,566	5,576	121,506	5,504	-101,805	5,651
5	217,348	5,587	103,050	5,507	-95,663	5,729
6	224,968	5,578	90,370	5,516	-90,043	5,636
7	232,411	5,655	77,707	5,533	-77,374	5,636
8	237,589	5,590	66,018	5,546	-67,293	5,628
9	242,787	5,581	54,957	5,559	-58,329	5,613
10	255,784	5,606	39,848	5,574	-50,189	5,600
11	265,642	5,620	0,000	5,578	-37,348	5,590
12	279,686	5,634	0,000	5,578	-19,957	5,599
13	295,571	5,646	0,000	5,578	-16,258	5,148
14	325,000	5,650	0,000	5,578	12,306	5,617
15	325,000	5,650	0,000	5,578	35,000	5,619
16	325,000	5,650	0,000	5,578	35,000	5,619
17	325,000	5,650	0,000	5,578	35,000	5,619
18	325,000	5,650	0,000	5,578	35,000	5,619
19	325,000	5,650	0,000	5,578	35,000	5,619
20	325,000	5,650	0,000	5,578	35,000	5,619

[redacted]

UNCLASSIFIED

[redacted]

UNCLASSIFIED

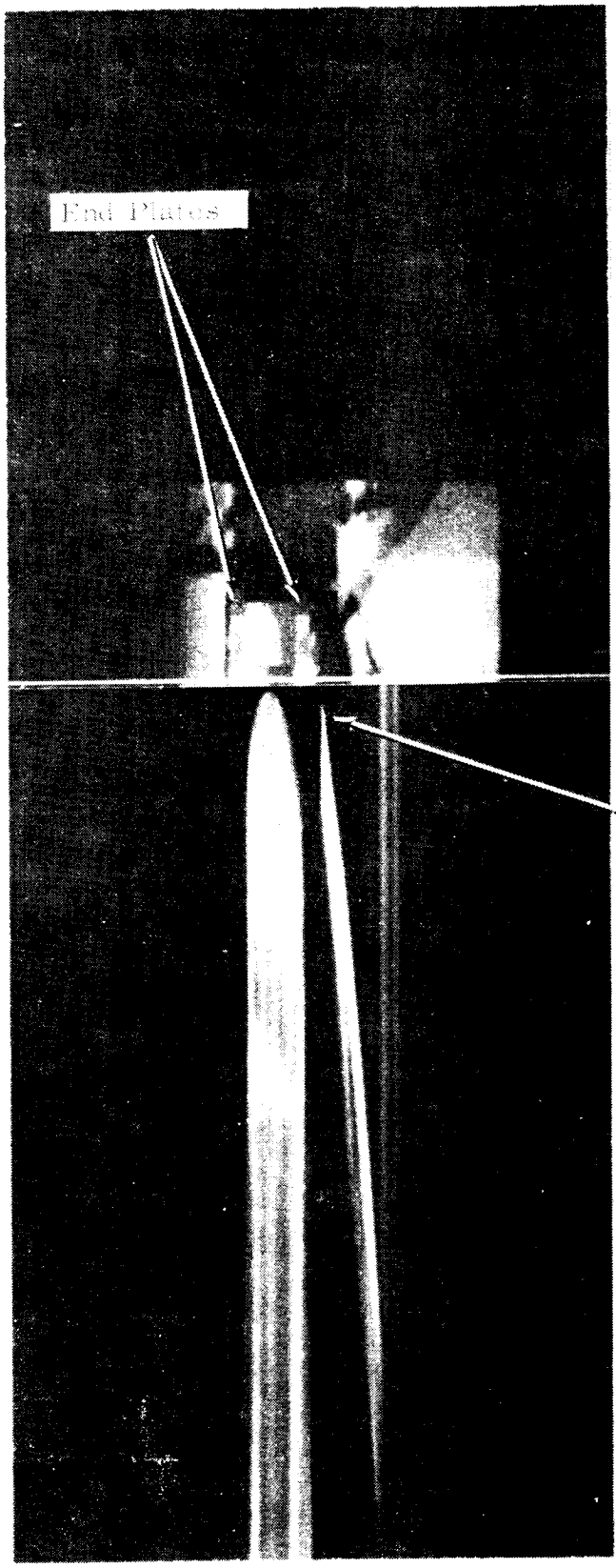
End Plates
Light from the Top of End Plate

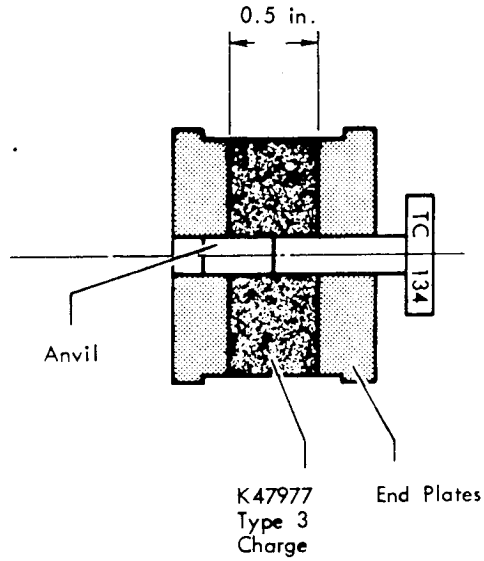
0.5 in.
TC 134
Anvil
K47977
Type 3
Charge
End Plates

Figure C-1

[redacted]

UNCLASSIFIED

DISTRIBUTION:
J. W. Pearce, 8120
F. J. Maloney, 8128
D. E. Gregson, 8130
F. J. Murar, 8182
J. C. King, 8300
G. W. Anderson, Jr., 8330
J. S. Anderson, 8331
D. M. Pierce, 8331
B. A. Wordan, 8331
H. R. Sheppard, 8333
Technical Library, 3421
G. C. Newlin, 6011/Mrs. C. H. Sproul, 3428-2
Records Depository & Distribution Section, 3428-2 (2)
E. Bodie, 8232
Central Technical File, 8232-2 (4)

[redacted]

[redacted]

UNCLASSIFIED

[redacted]