001582

[redacted]

W.O. # - 529260
TOTAL COPIES - 25

UNCLASSIFIED

SANDIA SYSTEMATIC DECLASSIFICATION REVIEW
DOWNGRADING OR DECLASSIFICATION STAMP
CLASSIFICATION CHANGED TO: U AUTHORITY: W.C. Layne
Envida Seph 12/08/97
PERSON CHANGING MARKING & DATE RECORD ID: 98SN0810
William Layne 12/15/97
PERSON VERIFYING MARKING & DATE DATED: 11/18/97

MAR 1 1966

3428-3

CHARACTERISTICS AND DEVELOPMENT REPORT OF THE MC-908 ROTARY CHOPPER
(Title Unclassified)

SCDR 194-60

AEC ATOMIC WEAPON DATA

SIGMA 3

RS 1331/1018

INVENTORIED
JAN 17 '62

SANDIA SYSTEMATIC DECLASSIFICATION REVIEW
1st Review Date: 11/4/97
Authority: ADD
Name: R. Blanar
2nd Review Date: 11-18-97
Authority: ADD
Name: W Layne
Information (Circle Number):
1 Classification Retained
2 Classification Changed to: U
3 Contains No DOE Classified Information
4 Coordinate With:
5. Contains UCNI?
6 Comments: Unclassified

H. E. Schildknecht, 1331

August 1960

Approved by: George J. Hildebrandt
G. J. Hildebrandt, 1330

INVENTORIED
AUG 1 1963
3427-1

ABSTRACT

This report provides a current record of the design specifications, product characteristics, development history and early production history of the MC-908. The basic design was conceived by Sandia to provide a miniaturized voltage-interrupting device with high shock capabilities which would convert an applied 24 to 32 volts DC voltage into a pulsating output voltage of essentially rectangular waveshape. The development program was accomplished by G-M Laboratories, Inc., Chicago, Illinois. All MC-908 production to date has also been performed by that company. Tests which have been conducted on development, TMS, and production models have proved that the design will perform its intended function. The number of models tested and the results of these tests are included in this report. Also included is a discussion of the problems which were encountered during development and early production, and the solutions to these problems.

[redacted]

[redacted]

INVENTORIED
MAR 8 1965
3427-1

[redacted]

UNCLASSIFIED

DISTRIBUTION:

1/25A S. A. Moore, 1210
2/25A J. W. Jones, 1220
3/25A R. S. Wilson, 1240
4/25A D. R. Cotter, 1260
5/25A J. P. Cody, 1320
6/25A G. J. Hildebrandt, 1330
7/25A L. W. Schulz, 1331
8/25A H. E. Schildknecht, 1331
9/25A W. E. Boyes, 1440
10/25A E. L. Deeter, 2440
11/25A B. E. Arthur, Jr., 2540
12/25A W. G. Merritt, 2543
13/25A J. R. Sublett, 2560
14/25A G. H. Roth, 5520
15/25A L. Gutierrez, 8140
16/25A L. E. Davies, 8150
17/25A C. R. Barncord, 8160
18/25A M. G. Randle, 3421-2
19/25A R. K. Smeltzer, 3421-3
20/25A W. F. Carstens, 3423
21-25/25A W. K. Cox, 3466-1

REPRODUCTION PERMISSION

This report is not to be reproduced, in whole or in part, without written permission from the manager of the originating department.

TABLE OF CONTENTS

		Page
1.	INTRODUCTION	5
2.	DESCRIPTION	5
	2.1 Purpose	5
	2.2 Mechanical Characteristics	5
	2.3 Electrical Characteristics	5
3.	DESIGN INTENT	9
	3.1 Functional and Life Requirements	9
	3.2 Environmental Conditions	11
	3.3 Reliability Requirements	12
4.	PRODUCT CHARACTERISTICS	12
	4.1 Capability	13
	4.2 Limitations	14
5.	TEST AND QUALITY REQUIREMENTS	16
	5.1 MC-908 Test Requirements	16
	5.2 MC-908 Quality Specification	17
6.	TOOL-MADE SAMPLE RESULTS	17
7.	DEVELOPMENT HISTORY	18
	7.1 Design Considerations	18
	7.2 Schedule	19
	7.3 Problems and Solutions	19
	7.4 Test Summary	19
8.	PRODUCTION HISTORY	20
APPENDIX A -- NX-310615		22
APPENDIX B -- TR-310615		27
APPENDIX C -- QS-310615		43
APPENDIX D -- EVALUATION TEST SUMMARY, MC-908		51

LIST OF ILLUSTRATIONS

Figure		
1	MC-908 Rotary Chopper	6
2	Exploded View of the MC-908	7
3	Operating Principle of MC-908 Rotary-Switch Assembly	8
4	Schematic, MC-908	10
5	Maximum Continuous-Duty Cycles, MC-908 Motor Operation Only	14
6	Maximum Continuous-Duty Cycles, MC-908 Operating into TR-310615 Life-Test Circuit	15
7	Time/Current Envelope, 32 volts DC Input, TR-310615 Life-Test Circuit	16

CHARACTERISTICS AND DEVELOPMENT REPORT OF THE MC-908 ROTARY CHOPPER

1. INTRODUCTION

This document provides an authoritative record of the design intent, product characteristics, development history, and early production history of the MC-908. It replaces the SRD report, "Evaluation of the MC-908 Rotary Chopper" (Ref. Sym: 1472-93), which was published in October 1958, and which defined the status of the MC-908 at design release. New information concerning the MC-908 which has become available since design release is contained herein. The format of this document is in accordance with the recommendations which are presented in the Sandia Corporation "Proposed Product Documentation Manual," dated November 6, 1959.

The product drawings and specifications which are the basis for production contracts are listed on NX-310615 (Appendix A).

2. DESCRIPTION

2.1. Purpose

The MC-908 is a DC-motor-driven type of rotary chopper (as contrasted to the vibrating-reed type of chopper) whose purpose is to convert an externally applied DC voltage into a pulsating output voltage of essentially rectangular waveshape. As utilized in a weapon firing set, this pulsating voltage is transformed to an approximately 100 times higher potential, rectified, and directed to the X-unit and Zipper capacitors.

2.2. Mechanical Characteristics

The mechanical characteristics of the MC-908 (Figure 1) are:

Shape	Cylindrical
Size	7/8 inch diameter by 2-3/4 inches long (total envelope)
Weight	4.6 ounces
Electrical Connector	5-pin asymmetrical

The MC-908 electrical connector assembly was especially designed for use in printed-circuit/potted type applications. The five electrical pins are tin-plated for good solderability, and the positioning of the pins is such as to provide for adequate space between adjacent "lands" on the mating printed-circuit board. In addition, a tapped mounting hole is located in the center of the connector assembly, thereby furnishing a convenient means for constraining the unit to the printed-circuit board during the soldering and potting operations.

2.3. Electrical Characteristics

The MC-908 consists basically of a permanent magnet DC motor driving a rotary-switch assembly (Figure 2). The operating principle of this assembly is pictorially explained in Figure 3. To simplify the drawing, only a single brush is shown engaging the segmented (center) section of the assembly, whereas there are actually three brushes, spaced 120 degrees apart (and in electrical parallel), which are in simultaneous contact with this segmented section. Also, an external circuit has been included as an aid in understanding the switching function of the assembly.

Slip rings A and B each contain three projections, spaced 120 degrees apart, which serve as conducting segments for the commutating section of the assembly. When these projections are juxtaposed, as shown in Figure 3, with equal angular spacing, the centerlines of adjacent segments are 60 degrees apart. The shaded areas surrounding the conducting segments denote a glass-bonded mica (mycalex) insulating and bonding material. This material electrically isolates and mechanically constrains the two slip-ring elements, and also provides the necessary bearing surfaces for the commutating brushes in the spaces between the conducting segments. These nonconductor spaces

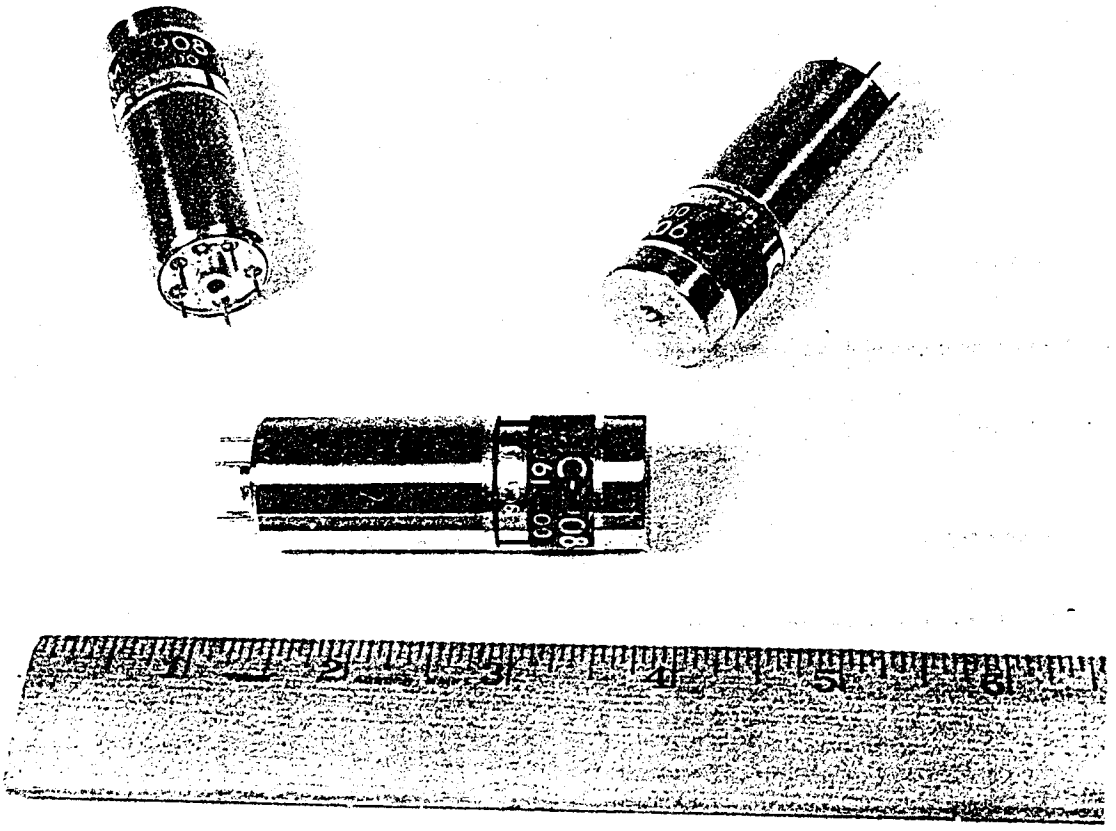

Figure 1. MC-908 Rotary Chopper

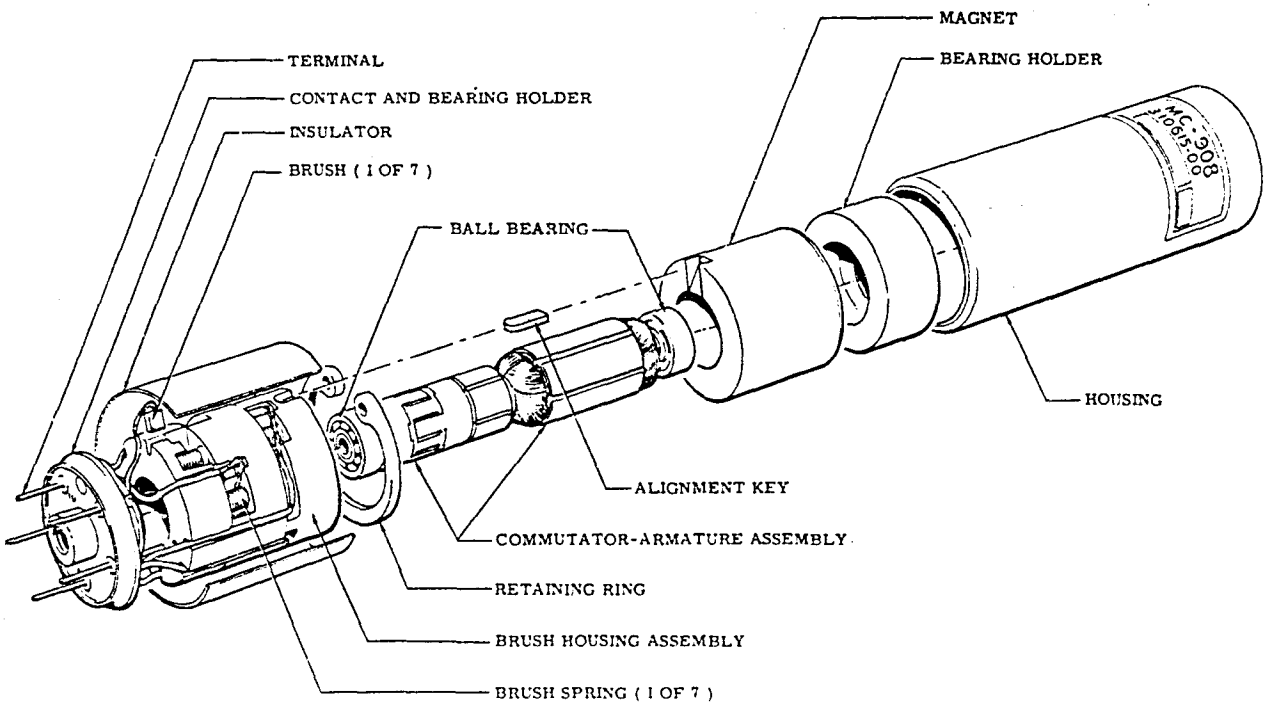

Figure 2. Exploded View of the MC-908

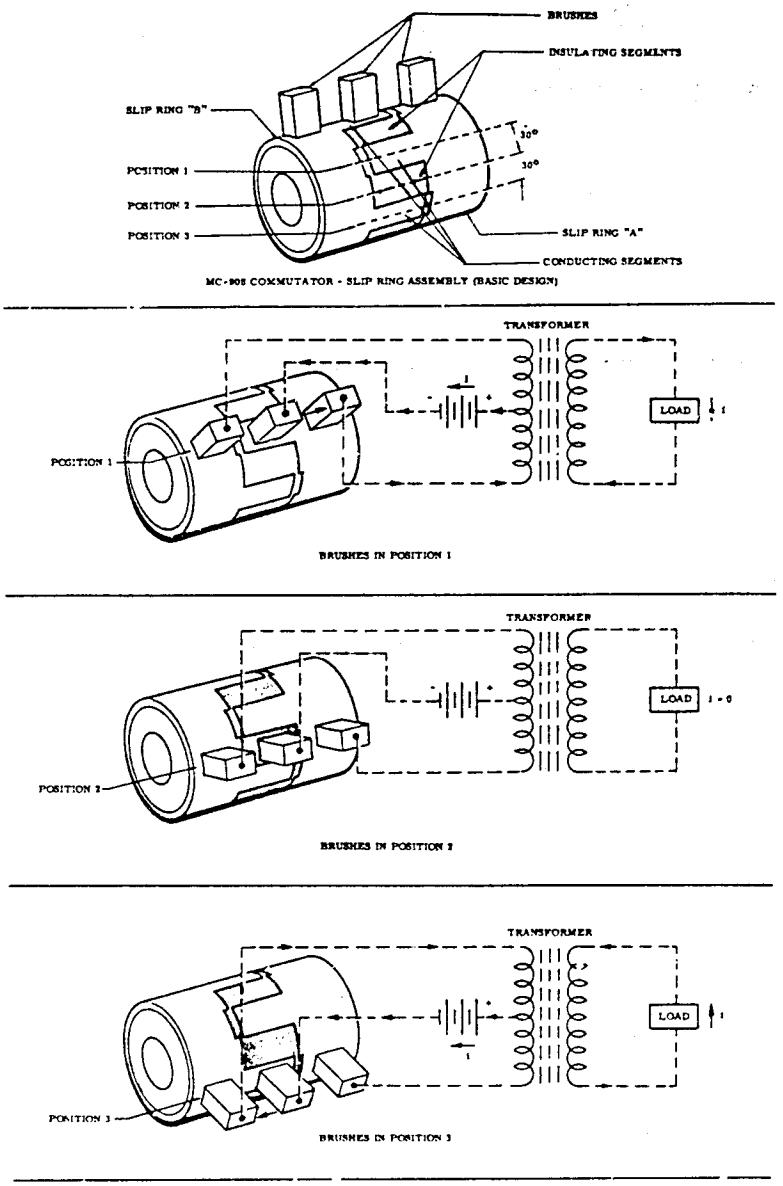

Figure 3. Operating Principle of MC-908 Rotary-Switch Assembly

between the conducting segments are referred to as insulating segments. Their peripheral lengths are greater than those of the commutating brushes, so that electrical continuity cannot be established between adjacent conducting segments as a result of a brush bridging the insulator.

In the actual MC-908 rotary switch assembly, the commutator rotates, and the brushes remain stationary with respect to the case. However, for the sake of clarity, Figure 3 shows the opposite to be occurring. As the three brushes move around the commutator periphery through positions 1, 2, and 3, it is seen that three distinct circuit conditions are consecutively established. In position 1, current flows from the commutating brush through a conducting segment and into the slip-ring "A" brush. This establishes a counterclockwise current flow in the primary portion of the external circuit. In position 2, electrical continuity has been interrupted between the three brushes and there is no current flow within the external circuitry. In position 3, current flow is from the commutating brush through a conducting segment and into the slip-ring "B" brush. This in turn establishes a clockwise current flow within the primary portion of the external circuitry. Therefore, the rotary-switch assembly functions as a single-pole, double-throw switch with the commutating brushes analogous to the movable arm and with the A and B slip-ring brushes serving as the fixed contacts (Figure 4). The assembly provides six consecutive periods of electrical continuity during one revolution of the commutator, which will in turn generate three complete electrical cycles in the indicated external circuit. Thus, a rotor speed of 20,000 rpm provides 1000 cps output frequency. The frequency limits for the MC-908 during and/or after all required envionments are 800 cps minimum and 1400 cps maximum over a 24 to 32 volts DC input voltage range.

The maximum motor current (steady-state operation) which is permissible during, or as a result of, all required operating environments is 650 milliamperes; likewise, maximum starting current for all required environments is 5.0 amperes. With 24 volts DC input voltage applied to the motor element, the unit will accelerate from standstill to an output frequency of 800 cps within 250 milliseconds following power application. The RF noise generated by the DC motor is limited to 150 millivolts conducted interference over a 0.15- to 20-megacycle frequency range. There is no RF filter element contained in the MC-908, so external filtering must be provided if suppression of noise of this level is required.

3. DESIGN INTENT

The basic design of the MC-908 was conceived by Sandia to provide a miniaturized voltage-interrupting device which would convert an applied 24 to 32 volts DC voltage into a pulsating output voltage of essentially rectangular waveshape. Because of the scheduled use of the MC-908 in weapons with very high shock requirements, a ruggedized design concept was adhered to throughout development.

Primary initial design objectives for the MC-908 in addition to high shock resistance were: (1) A 4-year undisturbed storage capability; (2) Resistance to radiation damage for exposures up to 1×10^{15} nvt, fast (>1 mev); (3) A switching mechanism which could undergo, without significant functional degradation, one hundred 90-second charging cycles, each of which would impose a peak surge current of approximately 20 amperes and an average steady-state current of 500 milliamperes.

Of the above objectives, the radiation and shock resistance of the MC-908 has been established, its 4-year storage capability is scheduled to be examined in an accelerated storage program, and the current-carrying capabilities of the switching mechanism are compatible with the design intent.

3.1. Functional and Life Requirements

The following minimum functional and life requirements for the MC-908 were established prior to design release, based upon system needs:

3.1.1. Output Frequency

Minimum, 18 vDC input -- 500 cps
Minimum, 24 vDC input -- 800 cps
Maximum, 32 vDC input -- 1400 cps

3.1.2. Rate of Frequency Acceleration

From standstill (24 vDC input), attain minimum 800 cps in 250 milliseconds.

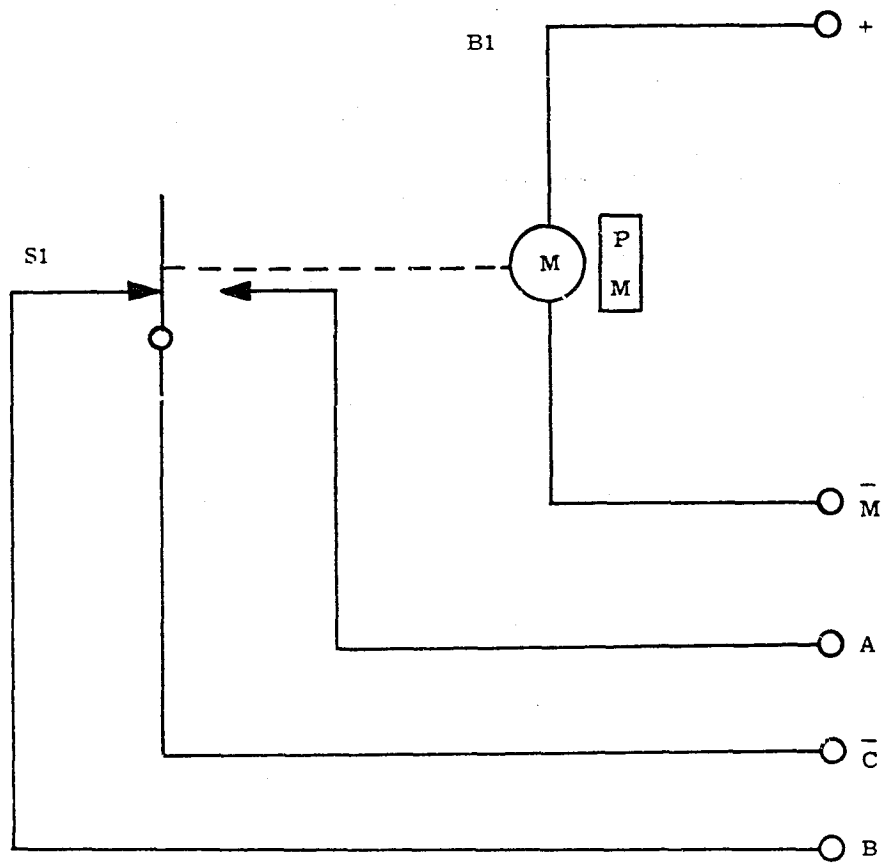

Figure 4. Schematic, MC-908

3.1.3. Motor Current

Maximum surge, 32 vDC input -- 5.0 amperes
Maximum average, 32 vDC input -- 0.650 ampere

3.1.4. Commutating Factor*

Maximum -- 0.90
Minimum -- 0.65

3.1.5. Insulation Resistance

Minimum, terminal to case -- 200,000 ohms at 100 volts DC
Minimum, between output terminals (chopper running, 24 vDC input to motor) -- 10,000 ohms at 100 volts DC

3.1.6. Charge Time†

Maximum, 24 vDC input -- 375 milliseconds
Maximum, 32 vDC input -- 225 milliseconds

3.1.7. Life‡

One hundred 90-second operating cycles

3.2. Environmental Conditions

3.2.1 Nonoperating -- The nonoperating environments for the MC-908 include the conditions to which the component may be subjected during the stockpile-to-target sequence, plus conditions which it may experience during shipping and in storage. During exposure to these environments, the component is not required to operate. The MC-908 was designed to function after having been subjected to the following conditions:

3.2.1.1. Vibration -- Vibration in any direction at any temperature between -65 and 160°F in accordance with the following table. However, inasmuch as the MC-908 may experience a more severe vibration environment while operating than while nonoperating, the vibration envelope for the operating condition (3.2.2.3) is specified in TR-310615.

Frequency range (cps)	Constant acceleration or double amplitude
10 to 73.7	0.036 inch
73.7 to 500	10 g

3.2.1.2. Mechanical Shock

a. Shock impulses of 1700 to 2200 g's applied in each direction along the three major axes (total of 6 shocks). Each shock impulse has a duration of 1.5 to 2.0 milliseconds and approximates a half-sine wave.

---

*The ratio of the actual contact-closed time to the total half-cycle time for each of the six half-cycle periods that are generated during one complete revolution of the rotor assembly.

†The time which is required to charge the TR-310615 life-test circuit capacitor (Appendix B) to 1600 volts. This is accomplished with only one chopper output terminal supplying energy to the circuit.

‡Life-testing is performed into the TR-310615 life-test circuit (Appendix B) with both chopper output terminals supplying energy to the circuit.

b. One shock impact along an axis parallel to the longitudinal axis. The applied acceleration to produce this impulse is directed from the blank end to the electrical-connector end of the case. The initial portion of the impulse approximates a half-sine wave and has a peak acceleration of 2500 to 3000 g's and a duration of 0.3±0.1 millisecond. This peak impulse decays to an acceleration of 500 to 800 g's and remains within these limits for a minimum of 15 milliseconds.

3.2.1.3. Temperature Shock -- Thermal shock caused by sudden variations between the temperature extremes of -65 and 160°F.

3.2.1.4. Storage Conditions -- Four years in stockpile without testing, during which time the following storage conditions may be encountered:

a. Temperature and Humidity

Exposure to any temperature from -65 to 85°F, with a relative humidity of 30 to 100 percent (including condensation and frost conditions), and to any temperature between 85 and 160°F, with the relative humidity decreasing linearly from 30 percent at 85°F, to 5 percent at 160°F.

b. Marine Atmosphere -- Exposure and storage conditions generally encountered on a wharf or dock adjacent to a large body of salt water for 6 months.

c. Dust and Sand -- Conditions encountered in desert atmospheres containing sand and dust particles.

d. Fungus -- Tropical atmospheres containing fungus spores.

3.2.2. Operating -- Operating environments for the MC-908 are defined as the environmental conditions under which the component may be required to perform its intended function during the stockpile-to-target sequence.

3.2.2.1. Temperature -- Temperatures from -65 to 160°F.

3.2.2.2. Linear Acceleration -- Acceleration of 100±5 g's in both directions along each of the three major axes.

3.2.2.3. Vibration -- Vibration along each of the three major axes with frequencies extending over a 10-to-1000-to-10 cps range at an input of 20 g's or 0.035 inch double amplitude, whichever results in the lower acceleration.

3.2.2.4. Radiation -- Exposure to an integrated dosage of fast neutrons at the level of 10^{15} neutrons per square centimeter.

3.3. Reliability Requirements

The design objectives of the MC-908 were to provide a rotary chopper of such quality that the probability (90 percent confidence) of a unit failing to start and perform its intended function during and/or following all predicted environments would not be greater than 0.01.

4. PRODUCT CHARACTERISTICS

The product characteristics of the MC-908 were determined prior to CER by actual tests on 63 development units which were built by G-M Laboratories, Inc., Chicago, Illinois. Of these 63 units, 17 were of final design, built to essentially the same specification-for-product as was released for production. Further evaluation testing was performed on 10 development units which were obtained from the supplier subsequent to CER (Reference Section 7). Additional post-CER information regarding the characteristics and capabilities of the MC-908 was obtained from TMS evaluation (Reference Section 6) and from the results of the lot-sample tests which have been performed on the 17 production lots completed to date (Reference Section 8).

4.1 Capability

The capability of the MC-908 is determined by its ability to perform its intended function under the environmental conditions which will be encountered in shipment, storage or during the stockpile-to-target sequence, either as a unit or as a part of a next assembly. The MC-908 is capable of operating within specified (Appendix B, Paragraph 3) functional tolerances during and/or following exposure to the following environments.

Reference paragraph	Design intent		Capability attained
3.2.1.2. (Mechanical Shock)	(1) 1700-2200 g's, 1.5 to 2.0 ms duration (6 directions).		Equal to design intent*
	(2) 2500-3000 g's, 0.3±0.1 ms duration followed by 500-800 g's for 15 ms (1 direction).		Equal to design intent*
3.2.1.3. (Temperature Shock)	-65°F to 160°F		Equal to design intent
3.2.2.1. (Temperature)	-65°F to 160°F		Equal to design intent†
3.2.2.2. (Linear Acceleration)	100 g's applied in 6 directions		Equal to design intent
3.2.2.3. (Vibration)	Frequency Range	Acceleration or double amplitude	
	10-1000-10	0.036 in. d.a. or 20 g, whichever is less	Equal to design intent‡
3.2.2.4. (Radiation)	1×10^{15} nvt, fast		Greater than design intent (Reference Section 7)

*Limited tests performed on MC-908 production units indicate that the design is capable of withstanding mechanical shocks of 4000 g's in all directions for time durations ranging from 0.2 to 2.0 milliseconds. During December 1959, four MC-908's were subjected to shocks ranging from 4700 to 6200 g's (0.2 to 0.4 millisecond's time duration) along their longitudinal axes. Although no failures were experienced, some minor structural damage was found in all four units in the post-mortem examinations, indicating that decreased reliability can be anticipated for shocks of this magnitude.

†Three XMC-908 development models have been subjected to output frequency, commutating factor and charge time tests (Paragraphs 3.3, 3.8, 3.9.1/3.9.2 of TR-310615) during and following 16 hours of exposure to 250°F. The results of these tests were within TR-310615 requirements, indicating that the MC-908 has a high-temperature capability beyond the present specification-for-product.

‡Two XMC-908 development models have been checked for resonance over the frequency range of 10 to 2000 to 10 cps. No resonant conditions were observed. These units were then cycled for 6 hours over a 10-2000-10 cps frequency range, at 0.036 in. d.a. or 20 g, whichever was less. The two units were subjected to TR-310615 basic test requirements during and following vibration cycling. All tests were within TR-310615 requirements, indicating that the MC-908 has vibration capabilities in excess of the present specification-for-product.

In addition to the above environments, the MC-908 is not affected by salt spray, sand and dust, humidity, or fungus.

It will be noted in QS/TR-310615 (Appendices B and C) that the following lot-sample shock test is specified, which is not included under the Environmental Conditions (3.2) section of this document.

"4.7. Mechanical Shock "D" (Operating) -- With 24 volts DC applied to the motor terminals, the MC-908 shall be subjected to a total of six impact shocks. One impact shall be applied in each direction along the 3 mutually perpendicular axes defined in 4.6. Each shock impulse shall have a peak acceleration of 2500 to 3000 g and a duration of 0.3±0.1 millisecond and shall approximate a half-sine wave. Following the six shock impulses, the MC-908 shall be subjected to and meet the requirements of 3.2 through 3.9.2."

This test does not duplicate any known operating or nonoperating environment, but is intended to insure that the inherent shock capabilities of the MC-908 are retained in production.

4.2 Limitations

In order to avoid inadvertently exceeding MC-908 performance capabilities, the following limitations should be recognized and observed:

4.2.1. MC-908 Motor Element, Continuous-Duty Limits -- For MC-908 operation where only the DC motor element is energized (no electrical load applied to the rotary-switch element), the continuous-duty limits of Figure 5 below shall be observed throughout the indicated range of input voltages. Following any period of continuous operation in excess of 2 minutes, a 5-minute power-off period, or a period no less than twice the duration of the preceding operating period (whichever is less), shall be observed in order to allow the unit to cool. Following any continuous operating period of less than 2 minutes, a power-off period which is no less than the duration of the preceding operating period shall be observed for cooling.

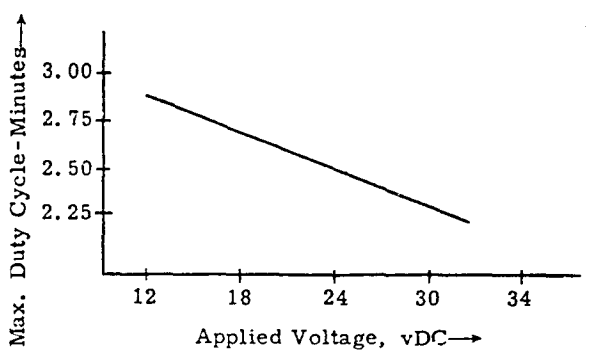

Figure 5. Maximum Continuous-Duty Cycles, MC-908 Motor Operation Only

4.2.2. MC-908 Rotary Chopper Continous-Duty Limits -- The rate of temperature rise for an MC-908 which is operating with 32 volts DC applied to only the DC motor element is approximately one-third less than the same unit operating into the TR-310615 life-test circuit (Appendix B) at the same input voltages. However, this difference decreases at lower input voltages. Accordingly, for an MC-908 operating into the TR-310615 life-test circuit, the

maximum continuous-duty cycles of Figure 6 below shall be observed throughout the indicated range of input voltages. Following any period of continuous operation into the life-test circuit in excess of one minute, a five-minute power-off period, or a period no less than twice the duration of the preceding operating period (whichever is less), shall be observed in order to allow the unit to cool. Following any continuous operating period of less than 2 minutes, a power-off period which is no less than the duration of the preceding operating period shall be observed for cooling.

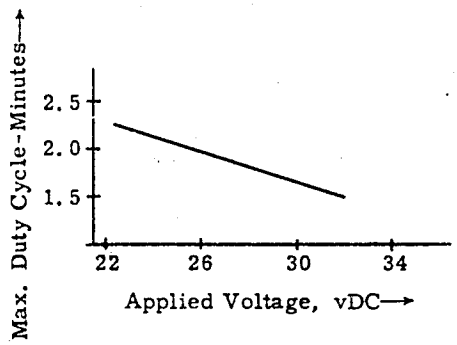

Figure 6. Maximum Continuous-Duty Cycles, MC-908 Operating into TR-310615 Life-Test Circuit

4.2.3. MC-908 Motor Element, Applied-Voltage Limits

The maximum DC voltage, instantaneous or continuous, to be applied to the MC-908 motor element shall be 32.5 volts.

The minimum continuous DC voltage to be applied to the MC-908 motor element shall be 12 volts. If it is necessary to apply lower voltages than this, the period of voltage application shall be less than 2 seconds.

4.2.4. MC-908 Rotary Chopper, Electrical Load Limitations

Each MC-908 must be capable of accomplishing 100 operating cycles into the TR-310615 life-test circuit (32 vDC applied voltage) without violating the functional test requirements of that specification. Figure 7 illustrates the approximate current/time envelope which the rotary-switch element sees during each operating cycle into the life-test circuit. It will be noted that the initial current surge has decayed from a 20-ampere peak to 0.5 amperes steady-state in approximately 0.5 seconds. These current values will be found to vary slightly from unit to unit because of permissible variations in switching characteristics.

Inasmuch as it is unlikely that the MC-908 will be used in next-assemblies which exactly duplicate the circuitry of the TR-310615 life tester, it will continue to be necessary for each new application to establish correlation between the effect of its particular system on the rotary-switch element and the effect of the life test. This information will aid in determining whether the effective life of the MC-908 in a particular application is greater than or less than its rated life (100 operating cycles) into the TR-310615 life-test circuit.

Under no circumstances shall the MC-908 be operated into the TR-310615 life-test circuit at voltages greater than 32.5 vDC or less than 22.5 vDC.

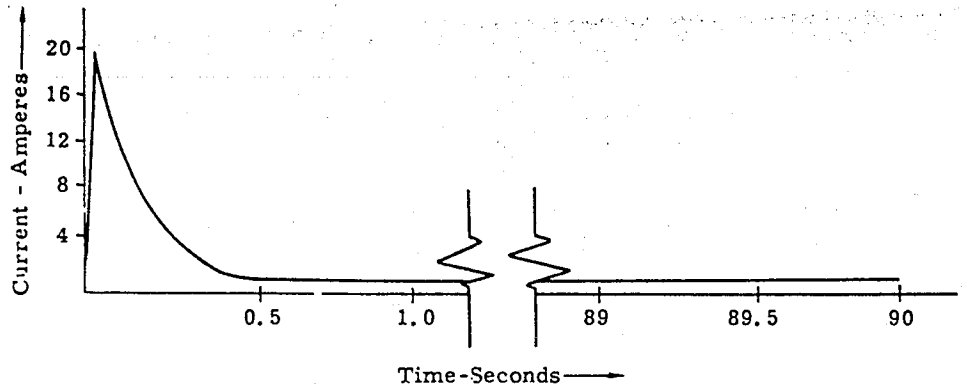

Figure 7. Time/Current Envelope, 32 volts DC Input, TR-310615 Life-Test Circuit

4.2.5. MC-908 Rotary Chopper, Selective Positioning of Adjacent Units in Next Assemblies

Two operating MC-908's, if positioned side-by-side with their longitudinal axes parallel, will experience minor shifts in their normal output frequencies if the space between their case OD's is decreased to less than approximately 1/2 inch. This effect is due to the introduction of lines of magnetic flux from the permanent magnet of one unit into the magnetic field of the other. The resulting frequency shift will continue to be exhibited by both units as long as the space between their cases is less than 1/2 inch. However, if the space is increased to 1/2 inch or greater, the output frequency of each unit will return to its original value.

In next assemblies where it is not possible to provide a minimum 1/2 inch clearance between the case OD's of adjacent MC-908's, and where the specified 800- to 1400-cps limits on output frequency are critical, it is recommended that the units be positioned such that their magnetic axes are mutually perpendicular (the magnetic axis of an MC-908 is a plane which is normal to its longitudinal axis, and which passes through the centers of the copper fill-plug and the tapped mounting hole in the terminal end of the case). This selective positioning will permit MC-908's to be positioned as close as 1/8 inch between case OD's without significant shifts in output frequency.

5. TEST AND QUALITY REQUIREMENTS

5.1. MC-908 Test Requirements -- TR-310615 (Appendix B) is the official document which delineates acceptance criteria for determining the acceptability of MC-908 production lots for WR use.

5.1.1. Production (Functional) Tests -- The nine functional tests of TR-310615 are the minimum requirements which determine the acceptability of the MC-908 for use in the next assembly. These are comparatively "universal" chopper characteristics, thereby permitting considerable flexibility in next-assembly circuitry design.

5.1.2. Production Sampling Tests -- The purpose of each of the eight production sampling tests is as follows:

5.1.2.1. Seal Leakage -- This test is designed to check the continued integrity of the pressure-tight case seal in production. Even though all present applications "pot" the MC-908 into the next assembly, a sound case seal provides added assurance of long storage life under uncontrolled stockpile conditions.

5.1.2.2. RF Noise -- This test measures the RF noise generating characteristics of the MC-908 in order to provide assurance that the attenuation which is provided by a next-assembly filter network will not be rendered inadequate as a result of an undetected increase in RF noise.

5.1.2.3. High and Low Temperature Operation -- These tests simulate environments which the MC-908 may experience during an actual weapon mission. The tests are intended to induce temperature-produced shifts in functional characteristics in order to insure that the design will continue to operate within allowable limits under these conditions.

5.1.2.4. Linear Acceleration -- This test simulates an environment which the MC-908 may experience during an actual weapon mission. The test induces the acceleration-produced forces which the MC-908 may experience during launch and/or flight in order to insure that the design will accomplish its intended function under these conditions.

5.1.2.5. Vibration and Mechanical Shock -- These tests are primarily intended to maintain a check on the continued preservation of the MC-908's inherent shock and vibration capabilities in production. However, the operating tests (Paragraphs 3.9.1 and 3.9.2 of TR-310615) which are performed during vibration cycling are intended to provide assurance that the design will accomplish its intended function during the stockpile-to-target sequence where induced vibrations within the specified frequency range may be encountered.

5.1.2.6. Life -- This test simulates the electrical load conditions to which the MC-908 will be subjected in the next assembly. The test is intended to induce current- and wear-produced shifts in functional characteristics in order to insure that the design will continue to operate within allowable limits under these conditions.

5.1.3 Confirmation Tests

Mechanical Shock (Two Tests) -- These tests specify shock envelopes which are acknowledged to be only approximations of shock impacts that the MC-908 will experience in actual weapon applications. Production units are being tested to these requirements on a confirmation basis in order to gain additional assurance of design capability.

5.2 MC-908 Quality Specification -- QS-310615 (Appendix C) is the official document which delineates the formation of production lots, testing responsibility, selection of lot samples, and sampling-test procedures for the MC-908. Fourteen units from each production lot are randomly selected for lot-sample tests. Ten of these units undergo destructive type tests and are not returned to the production lot.

6. TOOL-MADE SAMPLE RESULTS

MC-908 TMS evaluation, with the exception of one mechanical-shock confirmation test, was performed at G-M Laboratories during May 1959 (Reference Engineering Release PX-310615-H dtd. 7/2/59, Re: MC-908 Tool-Made Sample Report). Fifteen TMS MC-908's were randomly selected from a preproduction lot of 50 units and subjected to the test schedule of the TMS Planning Report (Ref. Sym: 1624(1279), dtd. 12/4/58). No failures were observed during the course of evaluation testing at G-M; however, it was subsequently learned that one unit which had displayed erratic speed characteristics at -65°F was removed from the lot without authorization and replaced with another unit. The erratic performance was found to be due to excessive brush dust, apparently caused by a missed cleaning operation following brush run-in.

Two TMS units failed functional requirements following subjection to confirmation shock tests (Paragraph 5.1 of TR-310615) at Sandia Corporation. However, the failures were found to have been caused by an appreciable overtest (4500 g's rather than the specified 3000 g's maximum). Two additional TMS units were subsequently subjected to the correct shock envelope without failure.

On the basis of TMS results, the MC-908 was designated acceptable for WR use.

7. DEVELOPMENT HISTORY

7.1. Design Considerations

The design considerations which primarily influenced the final electrical/mechanical design of the MC-908 were the following:

a. Minimum size and weight

b. High shock and vibration resistance

c. Long storage life

d. High level of radiation resistance

e. Suitable for printed circuit/potted applications.

Initial size and weight requirements for the MC-908, based on system needs, were 2.0 cubic inches maximum volume and 1.0 pound maximum weight. It was apparent that an integral motor/switch mechanism, mounted on a common shaft between bearings, would permit an appreciable size reduction over previous rotary-chopper designs. This method of construction proved to be feasible, and was incorporated into the MC-908 design at its inception. The final design MC-908 is 7/8 inch in diameter and 2-3/4 inches long, for an over-all volume of 1.65 cubic inches, and weighs 128.5 grams (4.55 ounces).

In order to achieve maximum shock resistance, a ruggedized design concept was adhered to throughout MC-908 development. The entire internal mechanism utilizes a "jigsaw" type construction for alignment and retention, and is unique in that the use of machine screws has been entirely eliminated. "Solid-stack" construction is employed for the rotor assembly, wherein a continuous metal-to-metal span (greater in diameter than the bearing ID's) is provided between bearings for the purpose of absorbing longitudinal shock impact. The presence of this span insures that no applied forces, other than the acceleration-induced forces produced by their individual masses, will be experienced by the more fragile portions of the rotor assembly during longitudinal shock application.

A heavy-walled (1/16 inch) stainless-steel cylindrical case furnishes the required rigid frame structure for the MC-908 internal mechanism. The combination electrical header and front bearing-holder assembly is "spun" into position over the open end of the case subsequent to coating the case/header intersurfaces with epoxy resin, thereby providing a dual holding/sealing function.

Development of the MC-908, particularly with regard to materials selection, was designed to minimize any significant storage effects. At final assembly, the stainless-steel case is first evacuated and then pressurized with a dry-nitrogen atmosphere, and a gas tight seal is established in order to maintain the integrity of this inert internal atmosphere.

Twenty production-model MC-908's were placed in 18 months' accelerated storage during March 1960. Ten development models were originally procured in March 1959 for the same purpose, but were withheld from storage because of suspected defects in their DC-motor elements.

The resistance of the MC-908 to radiation damage was demonstrated by the results of irradiation tests which were performed on two final design units during December 1958 (Reference SRD Memo 1472-(105), dtd. 4-15-59). There was no significant change in the functional characteristics of either unit when irradiated to 1×10^{15} nvt, fast (>1 mev), which is the maximum radiation requirement for all MC-908 weapon applications to date. However, the 24-volt frequency of one unit dropped below the 800-cps minimum (722 cps) following exposure to a level of 2.0×10^{16} nvt, fast. A post-mortem examination of this unit disclosed that the slow speed was caused by chemical decomposition of the bearing lubricating oil, with a resulting increase in bearing torque.

The design of the MC-908 electrical connector was the result of a joint effort by the development and systems organizations to provide a connector assembly which was readily adaptable for use in printed-circuit/potted type next-assemblies. There have been no indications to date that the connector design does not serve its intended purpose.

7.2 Schedule

The program leading to design release of the MC-908 was initiated in November 1957, with the placement of an order on G-M Laboratories, Inc., Chicago, Illinois, for 225 XMC-908's, consisting of 35 development models and 190 flight models. The design was to be based on an earlier rotary-chopper design which had undergone limited development at Sandia as a major component in a proposed power supply for the XMC-819 Zipper. Special effort was to be directed toward further miniaturizing and ruggedizing the Sandia design. Significant dates for the development programs were:

9/57	Preliminary Development Specification No. 185 for XMC-908 completed.
11/57	P. O. 14-8212 for 225 XMC-908's placed with G-M Laboratories
12/58	Design layout completed
2/58	First prototype models received from supplier
4/58	Change Order No. 1 to P. O. 14-8212 placed, increasing quantity to 540 XMC-908's. Of this quantity, 75 units were for R&D use, and the remaining 465 units were flight models.
4/58	First development models received from supplier
6/58	AI released
8/58	First final-design development models received from supplier
9/58	Design release

7.3 Problems and Solutions

Evaluation testing performed during XMC-908 development revealed two major design problems. These were: (1) breakage of a mycalex keying-boss from the brush-housing assembly during high-g shock (the boss could subsequently drop into the revolving rotor assembly); and (2) tendency for an epoxy insulator used in the rotary-switch commutator assembly to soften and char in the presence of an electrical arc.

The problem of the mycalex boss shearing and dropping into the rotor assembly due to high-g shock was corrected by (1) substituting a steel key for the boss, thereby eliminating the weak design member, and (2) redesigning the associated keying cavity such that the steel key could not drop into the rotor assembly even though its bond with the brush-housing assembly might be broken.

A modification was made in the design of the rotary-switch commutator assembly to correct the problem caused by degradation of the epoxy insulator. The modification involved substituting a mycalex (glass-bonded mica) insulating and bonding material for the epoxy. The mycalex was also found to provide an excellent brush-bearing surface, thereby serving to replace the "floating" (electrically isolated) copper insulator segments which had been employed in the initial commutator design.

A problem encountered during one period of development, which was due to lack of adequate process control during manufacture, was the tendency for some DC-motor permanent-magnet stators to demagnetize during -65°F operation. The difficulty was traced to improper orientation of the stators' prestressed axes. This condition resulted in an appreciable increase in the armature-reaction demagnetizing effect which, in some instances, was enough to reduce the residual magnetism of the stators. Tighter controls to insure that the prestressed axes alignments were within specified tolerances served to correct the foregoing problem.

7.4 Test Summary

MC-908 evaluation testing during development was performed in accordance with the conditions specified in memoranda from the Weapons Development Organization outlining the desired component characteristics. The results of the environmental test program which was conducted prior to MC-908 design release are summarized in Appendix D.

It will be noted that the only failures resulting from the environmental tests which were performed on the 17 final design development models were caused by mechanical shock. These failures were due to mycalex keying bosses breaking from the brush-holder assembly during shock and dropping into the rotor assembly. Section 7.3 describes the action which was taken following design release to correct this condition. In order to prove the foregoing "fix," the following mechanical shock tests were performed on MC-908 development models subsequent to CER.

Applicable specification	No. of units	Test results
Para. 4.7 of TR-310615 (Reference Appendix B)	4	All functional tests within tolerance
Para. 5.1 of TR-310615 (Reference Appendix B)	2	All functional tests within tolerance
Para. 5.2 of TR-310615 (Reference Appendix B)	4	All functional tests within tolerance

As indicated in the above "Test Results" column, no failures were experienced in this series of tests.

8. PRODUCTION HISTORY

Failures were experienced in the first two MC-908 production lots when two units from lot 1, and 1 unit from lot 2, developed "open" armature windings during mechanical shock. This condition was found to have been due to "cold" solder connections between the winding elements and their associated commutator bars. The problem was resolved prior to the fabrication of lot 3 by (1) modifying the commutator design in order to provide for more positive mechanical connections between the bars and winding leads, and (2) by employing improved soldering equipment and techniques. No failures of this nature have been experienced with MC-908's which contain these improvements.

TMS evaluation was performed on 15 units from production lot 3, and they were judged acceptable. The details of the TMS evaluation program are presented in Section 6.

Failures were encountered in production lots 4 and 5 when one unit from each lot exhibited a low 24 vDC output frequency following 100 life cycles. A joint Sandia/supplier investigation into the cause of this problem was conducted, during the course of which 46 MC-908's were tested to or beyond the 100 life-cycle requirement of TR-310615. It was not found possible, however, to reproduce the failing conditions which had been observed in lots 4 and 5.

Subsequent to the above investigation, it was discovered that the motor brushes in all MC-908 production units through lot 5 had been incorrectly installed, and were rotated 180° from their correct positions. It has not been established that this condition was the reason for the lots 4 and 5 life-test failures, but it could have been a major contributor to the problem. A more likely cause, however, was a general lack of manufacturing control by the supplier, with a resulting deficiency in product uniformity. This lack of control is illustrated by the following undesirable conditions which were revealed in the MC-908 production line during the course of the joint supplier/Sandia investigation into possible causes for the lots 4 and 5 failures:

1. Epoxy leakage into rotor cavities as a result of careless bonding procedures.

2. Numerous violations of the specified MC-908 assembly procedure.

3. "Customizing" of brush springs (by bending the spring force-arms) in order to bring low- or high-speed units into tolerance.

4. Presence of burrs on the edges of the armature winding-slots because of failure to perform a required deburring operation.

5. Epoxy migration into brush interiors because of a lack of proper process control during bonding-material preparation and application.

Prior to fabrication of the first production lot of MC-908's, a strike at the plant of the brush supplier necessitated a change in the rotary-switch brush material in order to avoid a delay in production. The substitute brush proved to have a high contact resistance and greater "dusting" tendencies than its predecessor, and it was accordingly decided to return to the original type brush for production lot 6 and beyond.

A general tightening of manufacturing controls was accomplished at the supplier's plant prior to the fabrication of lot 6. There was no recurrence of previous difficulties, and the lot was accepted for WR use.

Production lot failures (broken rotary-switch brushes) were also encountered in lots 12 and 15. These failures were first thought to be due to defective brushes, but were later found to have been caused by the presence of hard (less than 3 mm Hg) vacuums in the failing units. This condition was traced to operator error during the evacuating/pressurizing procedure which is performed on each assembled MC-908 prior to sealing. Inasmuch as it was impossible to predict how far back into MC-908 production the error had been committed, or how many units were affected, an "A" class ECO was issued on April 18, 1960 which required that all MC-908's which had been produced and shipped (and those to be produced in the future) were to be subjected to a high-voltage breakdown test. This test was designed to screen out those units which contained internal vacuums. The minimum breakdown voltage was initially set at a high (2000 vDC) level in order to insure that only good products would be shipped and/or used in next assemblies. A higher than anticipated fallout of MC-908's failing to meet the 2000 vDC requirement resulted, however, and data are currently being accumulated for determining the advisability of lowering the breakdown voltage requirement in order to salvage many MC-908's which failed to pass the initial test. A lower voltage requirement is felt to be justified, inasmuch as it has been established that an MC-908 which has been subjected to considerable operation will exhibit a lower breakdown voltage than a "new" MC-908 (both units at the same internal pressure) because of a greater accumulation of brush dust in the former unit.

Additional MC-908 failures which were of a random nature and which required requalification of the affected lots were:

Lot 16 -- One lot-acceptance MC-908 exhibited a pin-to-case insulation resistance below the specified 200 K-ohms minimum during high-temperature testing. The failure was found to be caused by insulation inadvertently being ground off a portion of the armature winding during the armature-balancing operation. A low-resistance path resulted between the bare wires and the armature laminations, as evidenced by the low insulation resistance reading.

Lot 17 -- One lot-acceptance MC-908 failed to operate after mechanical shock. The failure was traced to an out-of-tolerance (short force-arm) motor-brush spring which caused force to be exerted on the side of the brush instead of on its top surface. This made the brush "hang" in its cavity, rather than contact the motor commutator as required for proper operation.

[redacted]

UNCLASSIFIED

APPENDIX A

NX-310615

MC-908 NUMERICAL INDEX

[redacted] UNCLASSIFIED

001603

UNCLASSIFIED

SC-6165-B (3-58)

CLASSIFICATION

DWG SIZE - A | SHEET 1 OF 2 | BY

NX 310615

NUMERICAL INDEX

MC-908

CHANGE AUTHORITY

BY	APPROVAL	DATE	ISSUE
		3-08-60	J

MC-908-9C1

NOTES:
1. INFORMATION WHICH WILL BE AUTHORIZED LATER
2. DRAWINGS PREVIOUSLY DESIGN RELEASED ON OTHER PROJECTS
3. SPECIFICATION ISSUES AND/OR AMENDMENTS IN EFFECT ON BID INVITATION DATE SHALL APPLY. LATER REVISIONS MAY BE USED. PROCUREMENT SOURCES FOR SPECIFICATIONS ARE CONTAINED IN 400180.
4. LISTED FOR REFERENCE ONLY, SUPPLIED ONLY ON SPECIAL REQUEST
5. LISTED FOR REFERENCE ONLY, NOT SUPPLIED TO CONTRACTORS
6. A DUPLICATE OF THIS MASTER SHALL BE SUPPLIED FOR MANUFACTURING ONLY
7. ANY ISSUE FURNISHED MAY BE USED INSTEAD OF THE ISSUE SPECIFIED

NX ISS.	SIZE	DWG. NO. (FIRST 6 DIGITS) PART NO. (8 DIGITS)	NOTE	DWG ISS.	DRAWING TITLE	TAB. ON DWG NO.	TAB. DWG ISS.	CLASS
		PRODUCT SPEC						
	A	PS-310 615		A	PRODUCT			UNC
		NUMERICAL INDEXES						
	A	NX-310 615-00			MC-908			UNC
		PRINCIPAL						
	A	139 168		A	SCHEMATIC,MC-908			UNC
J	F	310 615-00		H	MC-908			UNC
	A	QS-310 615		C	QUALITY			UNC
	A	TR-310 615		D	TEST REQUIREMENTS			UNC
		SUBASSYS & DETAILS						
	B	130 119-00		C	INSULATOR,CONTACT			UNC
	B	130 120-00		D	SPACER			UNC
	B	130 121-00		D	PLUG			UNC
	B	130 122-00		B	WASHER			UNC
	B	130 123-00		B	WASHER,THRUST			UNC
	B	130 124-00		C	INSULATOR,WEDGE			UNC
	B	130 125-00		C	INSULATOR,SLOT			UNC
	B	130 126-00		A	INSULATOR,PLATE			UNC
J	B	130 127-00		E	HOLDER,BEARING			UNC
	B	130 128-00		D	PLATE,ARMATURE			UNC
	C	130 129-00		F	SPRING,HELICAL,			UNC
J	C	130 130-00		E	BRUSH,MOTOR			UNC
J	C	130 131-00		G	BRUSH,SWITCH			UNC
	C	132 202-00		D	MAGNET			UNC
J	D	132 203-00		D	HOUSING ASSY BRUSH			UNC
	D	132 204-00		D	COMMUTATOR			UNC
	D	132 205-00		C	HOUSING,MOTOR			UNC
	D	132 207-00		D	SHAFT			UNC
	D	132 208-00		D	HOUSING,BRUSH			UNC
	D	132 209-00		D	HOUSING,BRUSH			UNC
	D	132 213-00		D	HOUSING,BRUSH			UNC
J	D	132 214-00		G	CONTACT & BEARING			UNC
	F	132 215-00		D	ARMATURE,MOTOR			UNC
	C	132 267-00		C	PLATE,IDENTIFICATION			UNC
	B	132 275-00		B	PLUG			UNC
	B	132 423-00		D	SEGMENT,COMMUTATOR			UNC
	B	132 425-00		E	SLEEVE			UNC
	B	132 426-00		D	SEGMENT,COMMUTATOR			UNC
	C	132 428-00		E	SLEEVE			UNC
	A	145 498		A	PROCESS			UNC
	B	146 954-00		B	INSULATOR,STRIP			UNC

UNCLASSIFIED

310615

J23-24

001604

UNCLASSIFIED

SC-6169-B (3-58)

CLASSIFICATION

DWG SIZE - A | SHEET 2 OF 2 | BY

NX 310615
NUMERICAL INDEX

CHANGE AUTHORITY	BY	APPROVAL	DATE	ISSUE
			3-08-60	J

NOTES:
1. INFORMATION WHICH WILL BE AUTHORIZED LATER
2. DRAWINGS PREVIOUSLY DESIGN RELEASED ON OTHER PROJECTS
3. SPECIFICATION ISSUES AND/OR AMENDMENTS IN EFFECT ON BID INVITATION DATE SHALL APPLY. LATER REVISIONS MAY BE USED. PROCUREMENT SOURCES FOR SPECIFICATIONS ARE CONTAINED IN 400180.
4. LISTED FOR REFERENCE ONLY, SUPPLIED ONLY ON SPECIAL REQUEST
5. LISTED FOR REFERENCE ONLY, NOT SUPPLIED TO CONTRACTORS
6. A DUPLICATE OF THIS MASTER SHALL BE SUPPLIED FOR MANUFACTURING ONLY
7. ANY ISSUE FURNISHED MAY BE USED INSTEAD OF THE ISSUE SPECIFIED

NX ISS.	SIZE	DWG. NO. (FIRST 6 DIGITS) PART NO. (8 DIGITS)	NOTE	DWG ISS.	DRAWING TITLE	TAB. ON DWG NO.	TAB. DWG ISS.	CLASS
	B	147 202-00		D	WASHER,THRUST			UNC
	B	147 205-00		D	WASHER,THRUST			UNC
	B	147 229-00		C	KEY			UNC
	B	149 695-00		B	INSULATOR,SLEEVE			UNC
	C	155 624-00		B	SPRING,HELICAL			UNC
		SC SPECS						
		SC-7012/SP/			GENERAL			
		SC/7016/SP/			TOLERANCE OF			
	C	400 072	7	B	ALTERNATE MATERIALS			UNC
	A	400 079	7	E	MARKING,GENERAL			UNC
	A	400 088	7	C	DESIGN REQUIREMENTS			UNC
	A	400 089	7	C	TOOL-MADE SAMPLE			UNC
	A	400 115	7	B	PASSIVATION			OUO
	A	400 180	7	A	PROCUREMENT SOURCES			UNC
		GOVT.SPECS						
		FED STD-595	3		COLORS			
		MIL-C-572	3		CORDS,YARNS			
		MIL-E-74	3		ENAMEL LUSTERLESS			
		MIL-I-631	3		INSULATION			
		MIL-L-5085	3		LUBRICATING OIL			
		MIL-I-6181	3		INTERFERENCE LIMITS			
		MIL-L-73	3		LACQUER ENAMEL			
		MIL-N-25076	3		NAMEPLATE,			
		MIL-S-5059	3		STEEL,CORROSION			
		MIL-S-6872	3		SOLDERING PROCESS			
		MIL-S-7720	3		STEEL,CORROSION			
		MIL-T-8506	3		TUBING,STEEL			
		MIL-T-10727	3		TIN PLATING,FERROUS			
		MIL-W-583	3		WIRE,MAGNET			
		QQ-C-502	3		COPPER BARS,PODS			
		QQ-M-60	3		MAGNET MATERIALS			
		QQ-S-571	3		SOLDER,SOFT			
		QQ-S-763	3		STEEL,CORROSION			
		QQ-W-423	3		WIRE,STEEL,CORROSION			
		TT-P-98	3		PAINT,STENCIL,FLAT			
		MISC SPECS						
		AMS-5643	3		STEEL,CORROSION			
		ASTM-A 219	3		METHODS OF TEST			
		ASTM-B-152	3		COPPER,SHEET			
		NAS-669	3		RING RETAINING			

UNCLASSIFIED

P/0655

J25-26

APPENDIX B

TR-310615

MC-908 TEST REQUIREMENTS

1 GENERAL

1.1 Test Facilities. -- Test chambers shall have at least twice the volume of the component being tested and shall be arranged so that a minimum of radiant heat or circulating air impinges directly on the component.

2 TOLERANCES AND ACCURACIES

2.1 Test Equipment Accuracy. -- Test equipment used for the measurement of values specified herein shall have the following accuracies:

Relative Humidity	±5 percentage points
Acceleration	±5 per cent of reading
Temperature	±1°F
Time	±5 per cent of reading
Current	±2 per cent of reading
Voltage	±2 per cent of reading
Resistance	±5 per cent of reading
Absolute Pressure	±0.10 inch Hg
Capacitance	±5 per cent specified value
Vibration:	
Amplitude	±5 per cent of reading
Frequency	±2 per cent of reading or ±1 cps, whichever is greater
Frequency	±3 per cent of reading or ±25 cps, whichever is greater

2.2 Standard Tolerances. -- Unless otherwise specified, test conditions shall be held within the following limits:

Temperature	±5°F
Time	±5 per cent of nominal
Relative Humidity	±5 percentage points
Vibration:	
Amplitude	±5 per cent of nominal
Frequency	±2 per cent of nominal or ±1 cps, whichever is greater
Acceleration	±5 per cent of nominal

2.3 Output Impedance of Power Source. -- The output impedance of the 24- to 32-volt power source shall not exceed 0.1 ohm.

2.4 Test Conditions. -- Unless otherwise specified, all tests shall be conducted under room atmospheric conditions. Room temperature shall be maintained at 80° ±15°F during performance of tests.

SYM.	AUTHORIZATION	CHK. ENG.	DATE	ACTION	ORG.	INIT.	DATE
A	Revised/retyped	[illegible]	9/18/59	TYPE	7422	fb	[illegible]/4
B	ECO-MC-908-1C1	[illegible]	[illegible]	APPD.	7422	[illegible]	[illegible]
C	ECO-MC-908-5C1, 6C3	[illegible]	[illegible]	APPD.	7422	[illegible]	[illegible]
D	ECO-MC-908-7C1	[illegible]	8/6/59	APPD.	1472	[illegible]	[illegible]
				APPD.	1572	[illegible]	[illegible]
				APPD.	2593	[illegible]	[illegible]
				APPD.	1472	[illegible]	[illegible]
				APPD.	1572	[illegible]	[illegible]
				APPD.			
				APPD.			
				APPD.			

DWG CLASSIFICATION

UNCLASSIFIED

TITLE

TEST REQUIREMENTS FOR MC-908

5Y

DWG SIZE A

DRAWING NO. TR-310615

SHEET 1 OF 7

001607

UNCLASSIFIED

3 PRODUCTION TESTS

All MC-908 units shall be subjected to and meet the requirements of the following production tests. During performance of these tests, continuous operating periods in excess of 1 minute shall be followed by a 3-minute (power off) cooling period. In no event shall a period of continuous operation be in excess of 2.25 minutes.

3.1 Rotation. -- Apply 24 ±0.25 volts DC to the MC-908 motor terminals using the polarities indicated. The direction of motor rotation shall be counterclockwise as viewed from the terminal end of the case.

3.2 Insulation Resistance. -- Insulation resistance measurements shall be made on the MC-908 using the following methods.

3.2.1 With the motor operating at 24 ±0.25 volts DC input voltage, apply 100 ±5.0 volts DC between the chopper output terminals. The insulation resistance between terminals shall not measure less than 50,000 ohms. After completion of one or more tests, 4.2 through 5.1, the insulation resistance shall be greater than 10,000 ohms.

3.2.2 With the motor de-energized, apply 100 ±5.0 volts DC between pins A, B, $\overline{M}$ and $\overline{C}$ and case. The insulation resistance between the case and each pin shall measure not less than 0.50 megohm. After completion of one or more tests, 4.2 through 5.1, the insulation resistance shall be greater than 200,000 ohms.

3.3 Commutating Factor. -- Operating in the circuit of Figure 2 with 24 ±0.25 volts DC applied to the motor terminals, the MC-908 'contact closed versus contact open' curve for three consecutive cycles shall be observed on an oscilloscope. For any positive or negative half cycle, as defined in Figure 2, the ratio of contact-closed time to total half-cycle time shall not be less than 0.65 nor more than 0.90.

3.4 Starting Current. -- When a voltage of 32±0.25 volts DC is applied to the MC-908 motor terminals, the starting current surge shall not exceed 4.0 amperes and shall have decreased to a maximum of 550 milliamperes within 1 second following power application. During and after completion of one or more of the tests 4.3 through 5.1, the current surge shall have decreased to a maximum of 650 milliamperes within one second following power application.

3.5 Steady State Current. -- When a voltage of 32 ±0.25 volts DC is applied to the MC-908 motor terminals, the steady state current shall be observed for 30 seconds following power application and shall not exceed 550 milliamperes during this period. During and after completion of one or more of the Tests 4.3 through 5.1, the steady state current shall not exceed 650 milliamperes.

3.6 Steady State Frequency. -- With a voltage of 32 ±0.25 volts DC applied to the MC-908 motor terminals, the steady state frequency shall be observed at 20 ±10 seconds and 90 ±10 seconds following the initial power application and shall not exceed 1400 cps.

ISS.	AUTHORIZATION	CHK. ENG.	DATE	ACTION	ORG.	INIT	DATE
A	Revised/retyped			TYPE	7422	fb	9/4
B	Revised	[illegible]	[illegible]	APPD.	7422		
C	Revised	[illegible]	7/23/69	APPD.	7422	[illegible]	9/12/[illegible]
D	Revised			APPD.			
				APPD.			
				APPD.			
				APPD.			
				APPD.			
				APPD.			
				APPD.			
				APPD.			

DWG CLASSIFICATION

UNCLASSIFIED

TITLE

TEST REQUIREMENTS FOR MC-908

5Y | DWG SIZE A

DRAWING NO. TR-310615

SHEET 2 OF 7

3.7 Low Voltage Performance. — When a voltage of 18 ±0.25 volts DC is applied to the MC-908 motor terminals, the steady state frequency shall be observed at 20 ±10 seconds following power application and shall not be less than 500 cps.

3.8 Normal Voltage Performance. — With 24 ±0.25 volts DC applied to the MC-908 motor terminals, the output frequency shall reach a minimum of 800 cps within 250 milliseconds following power application. The steady state frequency shall be observed at 20 ±10 seconds and 90 ±10 seconds following the initial power application and shall not be less than 800 cps.

3.9 Charge Time. — The MC-908 shall be connected in the test circuit of Figure 1 and shall be subjected to and meet the following test requirements.

3.9.1 When switch S1 is closed and S2 is open, and a voltage of 24 ±0.25 volts DC is applied, the time interval between the instant at which relay K1 energizes the transformer centertap and the test circuit capacitor reaches a minimum of 1600 volts shall not exceed 375 milliseconds.

3.9.2 When switch S2 is closed and S1 is open, and a voltage of 24 ±0.25 volts DC is applied, the time interval between that instant at which relay K1 energizes the transformer centertap and the test circuit capacitor reaches a minimum of 1600 volts shall not exceed 375 milliseconds.

3.9.3 Repeat Test 3.9.1 with 32 ±0.25 volts DC input voltage. The time required to reach 1600 volts shall not exceed 225 milliseconds.

3.9.4 Repeat 3.9.2 with 32 ±0.25 volts DC input voltage. The time required to reach 1600 volts shall not exceed 225 milliseconds.

4 PRODUCTION SAMPLING TESTS

Each MC-908 shall be capable of meeting the following requirements. Tests marked 'D' are designated destructive tests.

4.1 Seal Leakage. — An external air pressure of 10 ±0.5 psi (gage) shall be applied to the MC-908 assembly for a minimum of 15 minutes. At the end of this period and within 10 seconds following external decompression to room atmospheric conditions, the MC-908 shall be completely submerged in 140°F to 160°F water for a minimum of three minutes. There shall be no indication of leaks during this period as evidenced by escaping air bubbles.

ISS.	AUTHORIZATION	CHK ENG.	DATE	ACTION	ORG.	INIT	DATE
A	Revised/retyped			TYPE	7422	fb	9/4
B		HRG	12/15/58	APPD.	7422		
C		HRG	7/28/59	APPD.	7422	NTG	7/4/58
D				APPD.			
				APPD.			
				APPD.			
				APPD.			
				APPD.			
				APPD.			
				APPD.			
				APPD.			

DWG CLASSIFICATION

UNCLASSIFIED

TITLE

TEST REQUIREMENTS FOR MC-908

5Y | DWG SIZE A

DRAWING NO. TR-310615

SHEET 3 OF 7

3.3-34

UNCLASSIFIED

4.2 RF Noise. -- With no external load on chopper output terminals, conducted radio interference measurements shall be made on the MC-908 positive power terminal and with 24 ±0.25, 28 ±0.25, and 32 ±0.25 volts DC applied voltage. Test procedures shall be in accordance with MIL-I-6181B. At least one frequency per octave in the frequency range of 0.15 through 20 megacycles shall be monitored for each applied voltage and the interference measurements recorded. The conducted interference limit, broad-band, throughout the specified frequency range shall not exceed 150 millivolts.

4.3 High Temperature Operation. -- The MC-908 shall be subjected to a temperature of 160°F for a minimum of two hours. At the end of this period and while at the 160°F temperature, the MC-908 shall be subjected to and meet the requirements of 3.2 through 3.9.2. The component shall then be stabilized at room temperature and be subjected to and meet the requirements of 3.2 through 3.9.2 and 4.1.

4.4 Low Temperature Operation. -- The MC-908 shall be subjected to a temperature of -65°F for a minimum of three hours. At the end of this period and while at -65°F, the MC-908 shall be subjected to and meet the requirements of 3.2 through 3.9.2 with the following exceptions: (1) for 3.4, the maximum permissible starting current surge shall be increased to 5.0 amperes.

4.5 Linear Acceleration. -- The MC-908 shall be mounted on a centrifuge and subjected to a linear acceleration of 100 ±5g in both directions along each of the three mutually perpendicular axes defined in 4.6. While undergoing acceleration in each of its six prescribed directions, the MC-908 shall be subjected to and meet the requirements of 3.9.1 and 3.9.2. Following completion of this test, the component shall be subjected to and meet the requirements of 3.2 through 3.9.2 under conditions of no applied acceleration.

4.6 Vibration 'D'. -- The MC-908 shall be mounted on a vibration table and connected into the circuit of Figure 1. The MC-908 shall then be vibrated along each of the following three mutually perpendicular axes: (1) along an axis parallel to the MC-908 longitudinal axis, (2) along an axis transverse to the MC-908 longitudinal axis and parallel to a line passing through the centers of the tapped mounting hole and the evacuation hole on the terminal end of the component, and (3) along an axis perpendicular to axes (1) and (2). The vibration test shall be completed in six hours, two hours for each of the three axes defined above. Four 30-minute cycles extending over a 10 to 1000 to 10 cps range shall be accomplished along each axis and at an applied amplitude of 0.036 inch (d.a.) or an applied acceleration of 20g, whichever results in the lower acceleration. During the performance of the first 30-minute cycle along each axis, the MC-908 shall be subjected to the requirements of 3.9.1 and 3.9.2 one time during each of the following vibration frequency ranges: 10 to 500 cps, 500 to 1000 cps, 1000 to 500 cps, 500 to 10 cps (total of eight 3.9.1 and 3.9.2 test subjections per axis). Following completion of vibration testing, the MC-908 shall be subjected to and meet the requirements of 3.2 through 3.9.2.

ISS.	AUTHORIZATION	CHK. ENG.	DATE	ACTION	ORG.	INIT	DATE
A	Revised/retyped			TYPE	7422	fb	9/4
B		HBy	7/17/58	APPD.	7422		
C		HBy	7/28/58	APPD.	7422	HBy	7/28/58
D	Revised			APPD.			
				APPD.			
				APPD.			
				APPD.			
				APPD.			
				APPD.			
				APPD.			
				APPD.			

DWG CLASSIFICATION

UNCLASSIFIED

TITLE

TEST REQUIREMENTS FOR MC-908

5Y | DWG SIZE A

DRAWING NO. TR-310615

SHEET 4 OF 7

35-36

4.7 Mechanical Shock 'D'(Operating). — With 24±0.25 volts DC applied to the motor terminals, the MC-908 shall be subjected to a total of six impact shocks. One impact shall be applied in each direction along the three mutually perpendicular axes defined in 4.6. Each shock impulse shall have a peak acceleration of 2500 to 3000g and a duration of 0.3±0.1 milliseconds and shall approximate a half-sine wave. Following the six shock impulses, the MC-908 shall be subjected to and meet the requirements of 3.2 through 3.9.2.

4.8 Life 'D'. -- Life tests shall be conducted with the MC-908 connected into the test circuit of Figure 1 (switches S1 and S2 closed). Tests shall be made with an applied voltage of 32 ±0.25 volts DC. The life test cycle shall consist of a 90-second operating time followed by a 5-minute waiting, power off, period for a total of 100 charging cycles. Following completion of the 100th cycle, the MC-908 shall be subjected to and meet the requirements of 3.2 through 3.9.2, except that for 3.5 the steady-state current shall be observed for 120 seconds following initial power application and shall not exceed 675 milliamperes during this period.

5 CONFIRMATION TEST

Each MC-908 shall be capable of meeting the requirements of the following test.

5.1 Two-Phase Mechanical Shock "D" (Non-Operating). -- The MC-908 shall be subjected to one shock impulse along an axis parallel to its longitudinal axis. The direction of applied acceleration to produce this impulse shall be from the case end to the terminal end of the unit. The initial portion of the impulse shall approximate a half-sine wave and shall have a peak acceleration of 2500 to 3000g and a duration of 0.3±0.1 millisecond (Velocity change during this period is not to be greater than 12.5 ft/sec) during which time the impulse shall decay to an acceleration of 700 to 800g maximum (with 500g minimum average) and be maintained within these limits for a minimum of 15 milliseconds. Following the shock impulse, the MC-908 shall be subjected to and meet the requirements of 3.2 through 3.9.2.

5.2 Mechanical Shock "D"-(Non-Operating). — The MC-908 shall be subjected to a total of six impact shocks. One impact shall be applied in each direction along the three mutually perpendicular axes defined in 4.6. Each shock impulse shall have a peak acceleration of 1700 to 2200g and a duration of 1.5 to 2.0 milliseconds and shall approximate a half-sine wave. Following the six shock impulses, the MC-908 shall be subjected to and meet the requirements of 3.2 through 3.9.2.

ISS.	AUTHORIZATION	CHK. ENG.	DATE	ACTION	ORG.	INIT.	DATE
A	Revised/retyped			TYPE	7422	fb	9/4
B	Revised	[illegible]	[illegible]	APPD.	7422		
C	Revised	[illegible]	[illegible]	APPD.	7422	[illegible]	[illegible]
D				APPD.			
				APPD.			
				APPD.			
				APPD.			
				APPD.			
				APPD.			
				APPD.			
				APPD.			

DWG CLASSIFICATION
UNCLASSIFIED

TITLE
TEST REQUIREMENTS
FOR
MC-908

5Y | DWG SIZE A
DRAWING NO. TR-310615
SHEET 5 OF 7

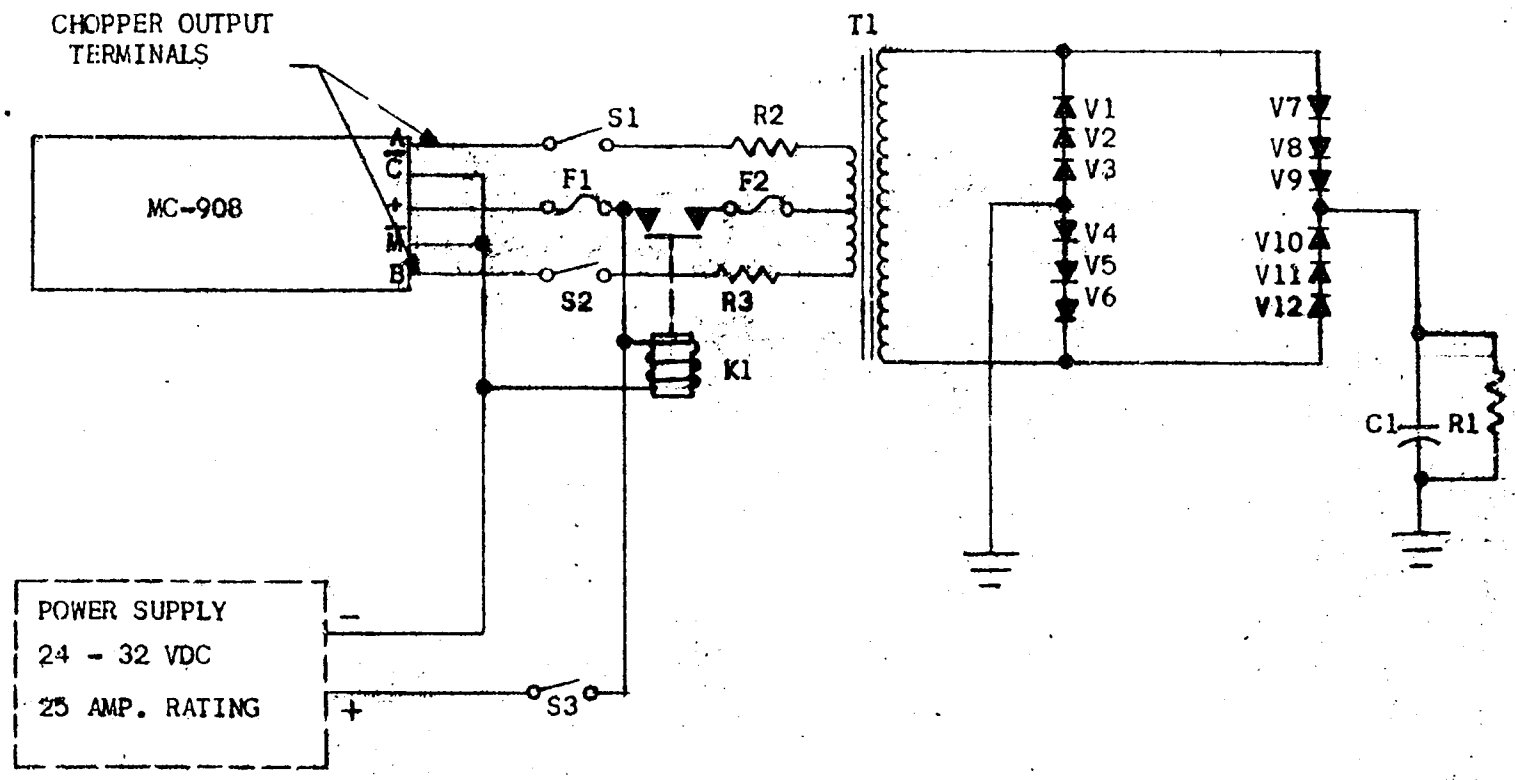

FIGURE 1

SYMBOL	VALUE
C1	5 mfd 3.5 kv minimum rating
F1	1.0 amp, 32-volt Slo-Blo
F2	3.0 amp, 32-volt Slo-Blo
V1-12	IN-588 Silicone Diodes, Texas Instrument Co.
S1-3	25 amp, 32-volts
T1	Transformer (to be furnished by Sandia Corporation)
R1	0.8 megohm at 3.5 kv
R2-3	The values of R2 and R3 shall be such that the total impedance (including wire, switches, fuse, power supply, transformer primary) of each one-half of the charging circuit (one chopper output terminal through "C"), exclusive of the internal chopper switching mechanism, shall be 1.0 ±.05 ohm
K1	32-volt, 2 to 5 seconds time delay relay, 25 amp contact rating

ISS.	AUTHORIZATION	SEC. ENG.	DATE	ACTION	ORG.	INIT.	DATE
1				DESIGN	4111Sah		6/12
A	Revised			APPD.	7422		
B				APPD.	7422		
C				APPD.			
D				APPD.			
				APPD.			
				APPD.			
				APPD.			
				APPD.			

DWG CLASSIFICATION: UNCLASSIFIED

TITLE: TEST REQUIREMENTS FOR MC-908

DWG SIZE: 5Y A

DRAWING NO. TR-310615

SHEET 6 OF 7

UNCLASSIFIED

RC 5400C (10-56)

39-40

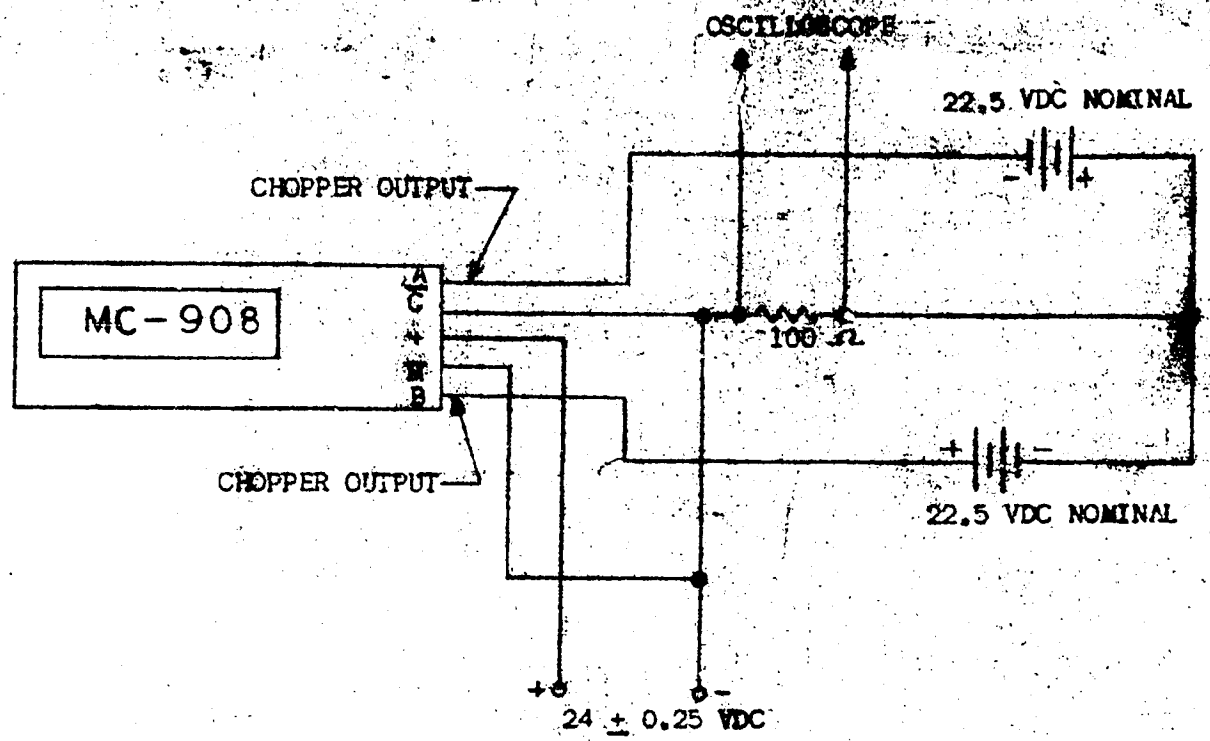

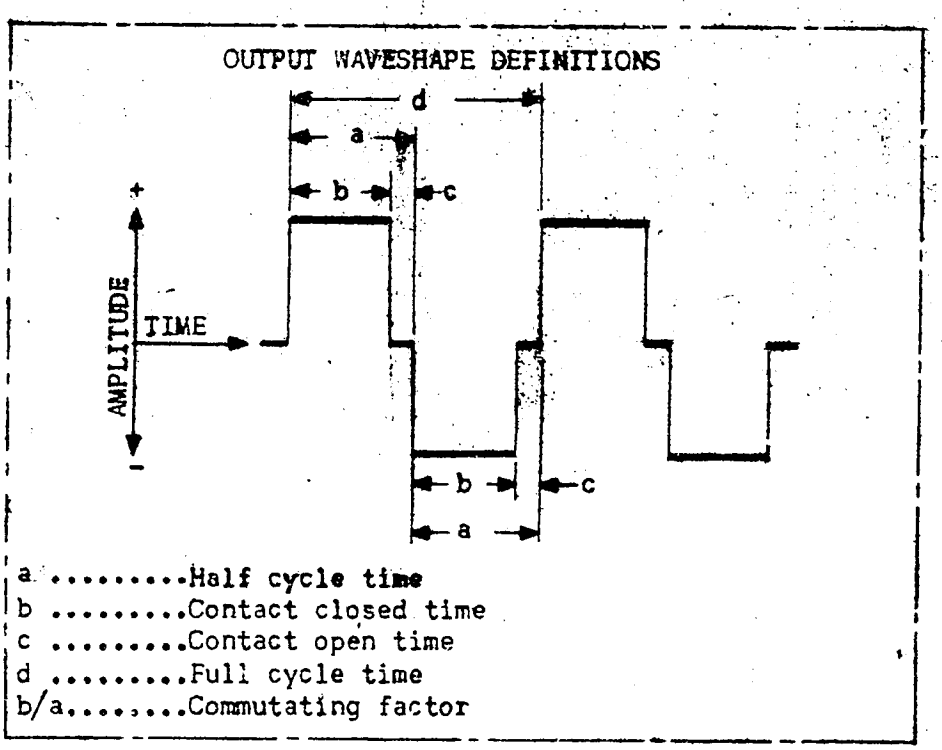

FIGURE 2

ISS.	AUTHORIZATION	ORIG. ENG.	DATE	ACTION	ORG.	INIT.	DATE
1				ORIGINAL	7431	AJL	6/12
A	Revised			APPD.	7422		
B		[illegible]	[illegible]	APPD.	7422	[illegible]	[illegible]
C		[illegible]	7/28/59	APPD.			
D				APPD.			
				APPD.			
				APPD.			
				APPD.			
				APPD.			
				APPD.			
				APPD.			

DWG CLASSIFICATION
UNCLASSIFIED

TITLE
TEST REQUIREMENTS FOR
MC-908

5Y | DWG SIZE A
DRAWING NO. TR-310613
SHEET 7 OF 7

41-42

APPENDIX C

QS-310615

MC-908 QUALITY SPECIFICATION

UNCLASSIFIED

1 GENERAL

1.1 Testing Responsibility. -- All tests will be performed or subcontracted by the supplier. The supplier will not subcontract any of the testing without the prior written approval of Sandia Corporation. Unless otherwise approved by Sandia Corporation, tests in accordance with 2 and 3.2 shall be performed before the affected lot is shipped. In the event samples fail to meet the tests of 3, the supplier shall hold the affected lot and immediately notify Sandia Corporation and the buyer.

1.2 Quality Surveys: -- The supplier shall permit periodic quality surveys at the point of manufacture by authorized representatives of Sandia Corporation and the buyer. The purpose of these surveys will be to obtain evidence of the supplier's continued conformance to the requirements and intent of this specification.

1.3 Test Records. -- The supplier shall provide records of tests on Form SC-6897-F supplied by the buyer.

1.4 Serial Numbers. -- Units shall be serial-numbered in sequence of manufacture and shall be permanently marked with respective serial numbers before starting tests cited in 2. Once assigned, a serial number shall not be re-assigned to another unit.

1.5 Modification of Sampling Plan. -- Sampling shall be done in accordance with 3.2. The supplier shall not use an alternate sampling plan without prior written approval from Sandia Corporation.

1.6 Lot Definition. -- A lot is a quantity of items manufactured (or assembled) in sequence without changes in design, materials, tooling, or processes, including the tests in 2. Lot size shall not exceed 150 units. The units of each lot shall be identified to distinguish them from units of other lots. The supplier shall inform Sandia Corporation and the buyer of the identification used for each lot.

1.7 Disposition of Rejected Lots. -- In case a lot is rejected, the supplier shall notify Sandia Corporation and the buyer, hold the lot, and try to determine cause of failure. If it is determined by Sandia Corporation that the remainder of the lot is acceptable after additional testing to 3, or through rework and additional testing to 2 and 3, the supplier shall take action as directed by Sandia Corporation and resubmit the remainder of the lot.

1.8 Destructively Tested Units. -- Units which are destructively tested (as defined in 3.2) and the package in which they are shipped shall be marked 'D Tested' and forwarded to Sandia Corporation with the test records of the lot from which they were drawn.

2 TESTS ON ALL UNITS

Each MC-908 shall be subjected to and shall meet the requirements of all tests specified in 3 of TR-310615. Units not meeting these requirements shall be rejected. Rejected units may be reworked and resubmitted.

ISS.	AUTHORIZATION	CHK ENG.	DATE	ACTION	ORG.	INIT.	DATE
1			6/16/58	TYPE	7422	mg	6/12
A	Revised		8/11/58	APPD.	7422		
B	ECO-MC-908-1C1			APPD.	7422		
C	ECO-MC-908-5C1			APPD.	1472		
				APPD.	1592		
				APPD.			
				APPD.			
				APPD.	1472		
				APPD.			
				APPD.			
				APPD.			

DWG CLASSIFICATION

UNCLASSIFIED

TITLE

QUALITY SPECIFICATION FOR MC-908

5Y | DWG SIZE A

DRAWING NO. QS-310615

SHEET 1 OF 3

45-46

UNCLASSIFIED

3 TESTS ON SAMPLES

Each unit in a lot shall be capable of meeting all of the requirements of the tests specified in TR-310615; however, acceptance of the lot will be based upon the results of the sampling test procedure in 3.2 in addition to the tests of 2.

3.1 Selection of Samples. -- The units comprising the samples shall be selected at random from each lot. Selection of units for testing shall be made so that all units of a lot have an equal chance of selection. Random number tables such as are included in Supply and Logistics Handbook H-105 (dated 27 April, 1954, 'Administration of Sampling Procedures for Acceptance Inspection,' Department of Defense, Washington 25, D.C.) are recommended, when applicable, for use to ensure the selection of random samples.

3.2 Sampling Test Procedure. -- Tests shall be divided into two groups, Group I and Group II. Tests for both groups shall be performed in the order listed.

Group I Tests

Units subjected to the tests in this group shall be considered as having their ultimate reliability unaffected by these tests.

Test	TR-310615 Paragraph
RF Noise	4.2
High Temperature Operation	4.3
Low Temperature Operation	4.4
Linear Acceleration	4.5

Group II Tests

Units subjected to the tests in this group shall be considered as having reduced reliability for ultimate intended use and shall be considered destructively tested.

Test	TR-310615 Paragraph
Vibration	4.6
Mechanical Shock	4.7
Life	4.8

3.2.1 Lot Sample Tests. -- Lots shall be formed in accordance with 1.6, and a sample size of 14 units shall be selected at random from each (3.1). These 14 units shall be subdivided as indicated below and shall be subjected to the specified Group I tests.

Number of units	TR-310615 paragraph
2	4.2
5	4.3 and 4.4 (in this order)
5	4.4 and 4.3 (in this order)
2	4.5

ISS.	AUTHORIZATION	CHK. ENG.	DATE	ACTION	ORG	INIT	DATE
1				TYPE	7422	mg	6/12
A	Revised			APPD.	7422		
B				APPD.	7422		
C				APPD.			
				APPD.	1592	wfj	9/12/58
				APPD.			
				APPD.			
				APPD.			
				APPD.			
				APPD.			
				APPD			

DWG CLASSIFICATION

UNCLASSIFIED

TITLE

QUALITY SPECIFICATION FOR MC-908

5Y | DWG SIZE A

DRAWING NO. QS-310615

SHEET 1 OF 3

UNCLASSIFIED

3.2.1.1 After passing the tests of 3.2.1, the four units subjected to tests of 4.2 and 4.5 shall be returned to the production lot. The remaining 10 units shall be assigned at random to the subdivisions of the Group II tests as follows:

Number of units	TR-310615 paragraph
2	4.6
4	4.7
4	4.8

A failure under Group I or Group II tests of this section shall result in rejection of the lot. Sandia Corporation and the buyer shall be notified without delay regarding the failure. All units and test records of the affected lot shall be held by the supplier for inspection by Sandia Corporation. The nature of the failure, as determined by Sandia Corporation, will determine the possibility of requalifying the lot for acceptance after additional testing.

ISS	AUTHORIZATION	ECN ENG	DATE	ACTION	ORG	INITIATOR	DATE
A	Revised/retyped			TYPE	7422	ps	9/4
B				APPD	7422		
C				APPD	7422		
				APPD			
				APPD	1572		
				APPD			
				APPD			
				APPD			
				APPD			
				APPD			
				APPD			

DOC CLASSIFICATION

UNCLASSIFIED

TITLE

QUALITY SPECIFICATION
FOR
MC-908

5Y | DWG SIZE A

DRAWING NO. QS-310615

SHEET 3 OF 3

[redacted]

UNCLASSIFIED

APPENDIX D

EVALUATION TEST SUMMARY, MC-908

DESCRIPTION

[illegible]

STATUS

[illegible]

KEY

1. Test Conditions
2. Duration
3. No. of Samples
4. Special Test Features
5. Applicable Specification
6. Comments on Test Results

TESTS TO ESTABLISH PROPER WORKMANSHIP, PROCESSING AND PERFORMANCE

(Generally requires continuous checking during production)

TEST	PROTOTYPE MODELS	EVALUATION MODELS	MANUFACTURER'S PRODUCTION (PLANNED TEST)	TOOL MADE SAMPLES (PLANNED TESTS)
ROOM TEMPERATURE	[illegible]	[illegible]	[illegible]	[illegible]
HIGH TEMPERATURE	[illegible]	[illegible]	[illegible]	[illegible]
LOW TEMPERATURE	[illegible]	[illegible]	[illegible]	[illegible]
VIBRATION	[illegible]	[illegible]	[illegible]	[illegible]
MECHANICAL SHOCK	[illegible]	[illegible]	[illegible]	[illegible]
LIFE	[illegible]	[illegible]	[illegible]	[illegible]
WEAPON TEST	At the time of this summary no flight test has been performed	At the time of this summary no flight test has been performed.	NOT APPLICABLE	NOT APPLICABLE
LINEAR ACCELERATION	[illegible]	[illegible]	[illegible]	[illegible]
TEMPERATURE SHOCK	[illegible]	[illegible]	NOT APPLICABLE	NOT APPLICABLE
EXTENDED HIGH TEMPERATURE	Due to pending design and material changes this test was not performed on prototype units	NOTE G	NOT APPLICABLE	NOT APPLICABLE
SEAL LEAKAGE	[illegible]	[illegible]	[illegible]	[illegible]
R.F. NOISE	[illegible]	[illegible]	[illegible]	[illegible]

TESTS TO ESTABLISH INTEGRITY IN CHOICE OF MATERIAL AND STRUCTURAL DESIGN

(Once established and tested, these tests are supported by drawings and specifications and normally do not require repeating in production)

TEST	EVALUATION MODELS AND TOOL MADE SAMPLES
RADIATION	[illegible]
HIGH TEMPERATURE STORAGE	[illegible]
HUMIDITY	NOT APPLICABLE (NOTE H)
SAND & DUST	NOT APPLICABLE (NOTE H)
FUNGUS RESISTANCE	NOT APPLICABLE (NOTE H)
SALT SPRAY	NOT APPLICABLE (NOTE H)

Note A

[illegible]

Note E

[illegible]

UNCLASSIFIED

[redacted]