[redacted]

W.O. # None
Rec'd 5 Copies
Cy's 4 Thru 8

UNCLASSIFIED 001529

SANDIA SYSTEMATIC DECLASSIFICATION REVIEW	
1st Review Date: 11/5/97 Authority: ADD Name: F B Cramer	Determination (Circle Numbers): 1. Classification Retained 2. Classification Changed to: U 3. Contains No DOE Classified Information 4. Contains Witn 5. Contains (CAT) 6. Contains: OK for OpenNet
2nd Review Date: 11-18-97 Authority: ADD Name: W. Layne	

SCDR 222-60

PILOT PRODUCTION REPORT ON THE MC-1127 ROTARY SWITCH

[redacted]

M. V. Schell, 8141-4

ABSTRACT

This report provides a record of the pilot production history for the MC-1127 rotary switch. Component test results, product definition drawings and specifications are included in the Appendices.

SANDIA SYSTEMATIC DECLASSIFICATION REVIEW DOWNGRADING OR DECLASSIFICATION STAMP	
CLASSIFICATION CHANGED TO: U Emilda Selph 11/19/97 PERSON CHANGING MARKING & DATE William Layne 12/15/97 PERSON VERIFYING MARKING & DATE	AUTHORITY: W C Layne RECORD ID: 98SN0816 DATED: 11/18/97

Approved: [signature] for C. Winter, 8141

Date: May 1961

[redacted]

UNCLASSIFIED

[redacted]

REPRODUCTION PERMISSION:

This report is not to be reproduced, in whole or in part, without written permission from the supervisor of the originating division.

INITIAL DISTRIBUTION:

L. Gutierrez, 3140

C. R. Barncord, 8150

W. L. Morehouse, 8141-4

Central Development Files, 3421-2

Central Record File, 3421-3

Publication Distribution, 3466-1 (3)

Central Files, 8233-2 (5)

CONTENTS

	Page
Introduction	4
Test and Quality Requirements	5
Pilot Production History	5
TMS Activity	7
First Production Lot	7
TMS Re-evaluation	10
Improvement Area	10
Gage and Tester	11
Appendix A	12
Appendix B	13
NX 310916	13
TR 310916	16
QS 310916	24
References	28

PILOT PRODUCTION REPORT ON THE MC-1127 ROTARY SWITCH

Introduction

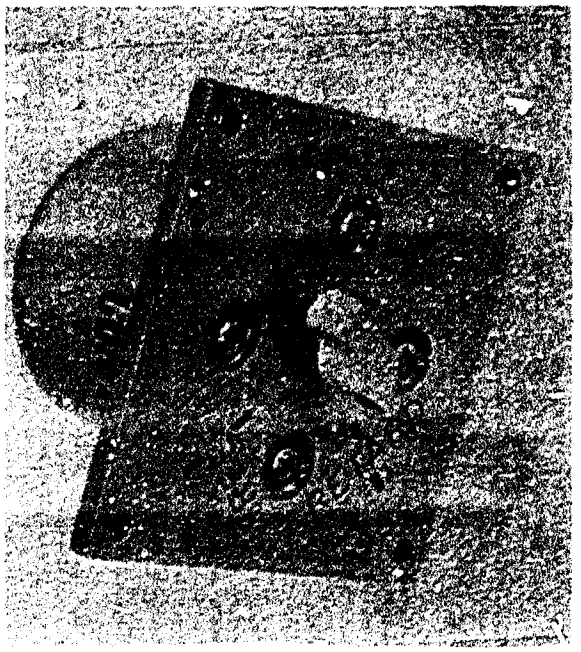

This document provides a record of pilot production history for the MC-1127 rotary switch (Figure 1) which was intended to provide a means of selecting the RETARD or the FREE-FALL option for delivering the Mk 41 bomb. It consists of a double-pole, single-throw switch which permits or prevents activation of the parachute deployment detonators. The switch must be set before takeoff of the aircraft; it is readily accessible through an access door in the bomb tail subassembly.

Product characteristics and development history are included in the Characteristics and Development Report, SCDR 42-60, (Reference 1). The product definition drawings and specifications are listed on NX 310916 in Appendix B.

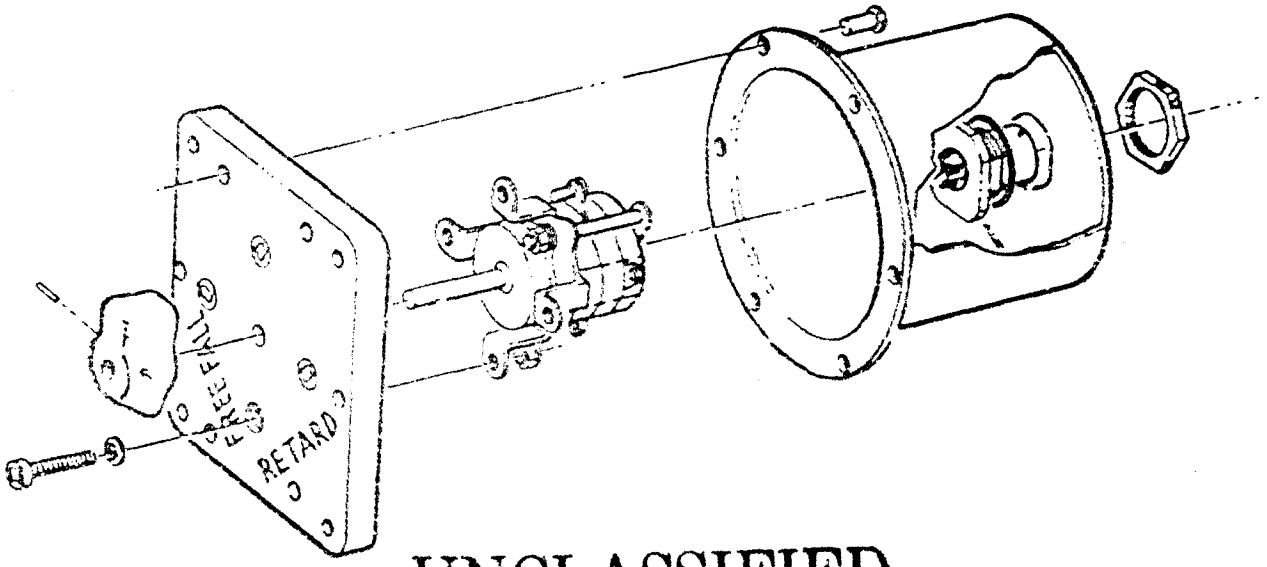

Figure 1. MC-1127 Rotary Switch

Test and Quality Requirements

The MC-1127 was to meet the requirements of the tests listed below, which are detailed in TR 310916 (included in the Appendix):

1. Circuit Resistance
2. Insulation Resistance
3. Mechanical-Electrical Function
4. High Temperature
5. Low Temperature
6. Temperature Shock
7. Humidity
8. Vibration
9. Linear Acceleration
10. Mechanical Shock

A sampling plan is used for lot acceptance, based on successful performance of the item in environmental tests (see QS 310916 in Appendix B). Component test results are shown in Appendix A.

Pilot Production History

Because of the frequent occurrence of high contact resistance in development units subjected to environmental testing, additional MC-1127's were obtained for environmental tests performed during pilot production. Four of these new units were subjected to humidity testing per TR-310916, and during the test high contact resistance was observed on all units. One unit had circuit resistance readings of 1.361 and 1.919 ohms, and was removed for inspection after nine days of exposure. There was no evidence of moisture within this unit or of corroded contacts, and the remaining three units had resistances well within tolerance at the conclusion of the 20-day test.

Throughout the test, insulation resistance values exceeded the allowable minimum. The lowest reading obtained was 60 megohms after exposure to humidity for 20 days.

When no moisture was observed in the units after exposure to humidity, it was decided that the high contact resistances had been caused by outgassing of materials within the unit. The cured silicone sealant, the silicone rubber quad-ring shaft packing, and the connector O-ring had all been recommended for the application as having no outgassing characteristics; therefore, the insulation materials were felt to be the only remaining possible contributors

to this condition. Of these, the vinyl insulation tubing per MIL-I-7444 used on the wiring harness has the least favorable characteristics, because this material often outgasses at a rate in direct proportion to temperature.

A test was conducted to determine whether the presence of vinyl sleeving affected the contact resistance. In this test one MC-1127 was assembled without the vinyl sleeving and was subjected to extended high temperature storage and temperature cycling. Contact resistance measurements made during the elevated temperature exposure were well below the allowable maximum of 0.15 ohm, with 0.029 ohm being the highest reading obtained.

Since there was no appreciable increase in contact resistance during the course of this test, it was decided that outgassing by the vinyl sleeving had been the cause of the high contact resistance in previous tests. It was anticipated that a change to inert sleeving material would result in an improvement in switch performance; however, sufficient time for evaluation testing was not available before TMS testing was scheduled to begin.

The use of soft room-temperature vulcanizing silicone mastic to form a seal at the unit cover and plate interface was found to preclude the use of a paint finish, because minute deposits of the silicone left on the surface during the assembly process cannot be completely removed. These deposits cause the paint to lift off. However, the plain anodized finish was determined to be satisfactory, and the requirement for painting the unit was removed. This in turn required a change from white-filled to black-filled marking on the switch mounting plate.

Several units failed to meet the knob position requirement (see Note, Para. 2.3 of TR 310916) during production checks. Investigation revealed that the flatness tolerances that could be held on the SA-793 sheet-metal mounting lugs did not produce consistent perpendicularity between the shaft and the mounting lug plane. A 3-degree departure from perpendicularity in this area causes interference between the switch shaft and the mounting plate clearance hole sides when the two are assembled. Further departure produces sufficient binding to overcome the force applied to the shaft by the snap-action spring, which means that the positioning function may not be performed. Also, it was not possible to increase the diameter of the clearance hole and maintain sufficient material to hold the shaft packing. Consequently, the production agency was allowed the optional use of shims between the switch lugs and the mounting plate to produce alignment by hand-fitting parts which interfere.

TMS Activity

Two groups of MC-1127's comprising six units each were submitted for environmental tests and evaluation. Four units in the first group were subjected to high temperature and low temperature tests per TR-310916. Contact resistance values exceeded the allowable limit on all units after both tests, with the highest readings being greater than 2 ohms. No further environmental tests were performed on these units, and a rejection TMS-ER was issued March 7, 1960.

The failure of the first group of TMS units to meet circuit resistance requirements verified earlier indications that a change in the interior materials was required. Tests conducted before the above failures indicated that the vinyl insulation tubing was at fault, and an inert material such as irradiated polyethylene was recommended as a replacement. On the basis of this recommendation, heat-shrinkable irradiated polyethylene tubing was incorporated to replace the vinyl tubing in the MC-1127, but schedules did not afford time to conduct verification testing.

A second lot was assembled and six of these units were selected for TMS evaluation. On April 12, 1960 tests listed on TR 310916 were begun. The performance of all units was satisfactory with one exception; on one check during humidity testing, the resistance of one circuit in one unit was 0.194 ohm, or 0.044 ohm over the allowable limit. No other discrepancies were observed, and the acceptance TMS-ER was issued June 8, 1960.

First Production Lot

The first production lot of 25 units was sampled per QS 310916, Para. 3.2.a. Ten units were subjected to and passed temperature shock and vibration tests; five of the units were subjected to ten 48-hour humidity cycles. At the conclusion of the humidity test, on one of the five units two of four switch circuit resistances exceeded the allowable maximum of 0.15 ohm by 0.035 ohm, causing rejection of the lot. Two days after the completion of the humidity test, electrical checks showed the four switch circuits over the maximum allowable resistance by 0.026 to 0.041 ohm. The unit was disassembled, inspected, and the SA-793 switch was sent to Organization 1621 for evaluation.

The circuit resistances of the remaining 24 units were measured to determine whether changes had occurred during the interim period. The

following results were observed:

1. In the group of five units subjected to temperature shock and vibration, three units had readings of 0.222 to 0.850 ohm.

2. The group of four remaining units which had been subjected to temperature shock, vibration, and humidity were all over limits; measurements of 0.245 to 1.050 ohm were obtained. One unit in the group of 15 non-tested units had resistances of 0.470 to 0.500 ohm. The remaining 14 units had circuit resistances less than the allowable 0.150 ohm.

In light of the high resistances exhibited by this lot of units, an overall component evaluation was conducted. The responsible Albuquerque organizations undertook the evaluation of the SA-793 switch, and Sandia Livermore undertook the evaluation of the MC-1127.

Efforts at Albuquerque were centered on determining the capability of the SA-793 to maintain contact resistance lower than the limit of 0.050 ohm over long storage periods. The resistances of switches which had been stored for periods up to one year were measured. A large number of units having high resistances (as high as 3 ohms) were found.

The SA-793 switch in the MC-1127 which had caused the first lot rejection was removed and disassembled and the contacts examined. The contacts were discolored, and grease films on them contained bits of bakelite and fibers. It was decided that the grease did not afford sufficient corrosion protection to the copper, and that the bakelite material had contributed to the out-of-limits resistance; therefore, the SA-793, as defined by the drawings in effect in early July 1960, was not reliable enough to warrant its further use.

At the request of Division 1432, in late 1959, an evaluation test was performed on 20 switches assembled with Handy and Harman Alloy No. 995, Type B, (Ag, Mg, Ni), stationary contacts, and coin silver on phosphor bronze rotors (see References 2 and 3). The resistances obtained during environmenta tests were low; in several instances values of less than 1 milliohm were recorded. After storage at Albuquerque for over seven months, the resistances of 15 of these switches were obtained. The maximum value recorded was 0.001 ohm, and four switches had minimum values of 0.0002 ohm.

Following the full evaluation outlined above, negotiations with Arrow-Hart and Hegeman, the supplier, were made to change the switch definition. As a result of the negotiations the stationary contact material was changed from copper to the Handy and Harmon silver alloy, the rotors were changed to coin silver on hard copper, and the bakelite mechanism-spacing washers were changed to teflon. The existing requirement for contact lubrication was re-

viewed, resulting in the incorporation of General Electric G-300 Versilube (a silicone grease) to be used in a thin film on the contact surfaces. With these changes incorporated, it was felt that the SA-793 switch would become suitably reliable.

Evaluation of the MC-1127 insulation and sealing materials had been conducted before the lot-testing failure; however, the cure characteristics of the silicone sealant were not well known. These characteristics were investigated, and it was found that the sealant activator, or catalyst, which effects the room-temperature vulcanizing process, has a mildly corrosive effect on copper. A test, conducted at Livermore to determine the degree of protection to the copper switch contacts afforded by the grease film, showed that the catalyst in the DC 5302 - DC 5303 system induced rather serious corrosion. This corrosion was apparently caused by a reaction between the grease and the sealant catalyst released as a gas. Switch contacts, previously cleaned and greased, which were exposed to the gases given off by the sealant during its cure, acquired green corrosion on all surfaces covered by the grease while bare copper remained unchanged. Contact resistances of 2.52 ohms and 0.085 ohm were recorded after five days of exposure in a sealed system.

In view of this occurrence, the significant difference in resistance between those MC-1127's which exceeded the allowable limit and those SA-793's which exceeded the allowable limit appeared to be explained.

The new SA-793 was incorporated on the MC-1127 product drawing by an "asterisk" class ("A" but without retrofit) ECO. In order to preserve production continuity, the Dow Corning sealant was not changed to a more desirable General Electric product at this time. In order to reduce the possibility of an unfavorable reaction between the sealant and the greased contacts, a modified assembly procedure was incorporated, wherein the unit connector was placed loosely in its mounting hole to provide a vent through which the catalyst could dissipate during the sealant cure. The assembly was then purged, using dry nitrogen, and the connector was installed, sealing the unit.

Tests conducted by manufacturers to determine the corrosive effects of silicone sealants cured in the presence of copper showed marked differences. In the systems evaluated, the variable which showed the greatest influence was the catalyst used. Negligible corrosion effects on copper were produced by General Electric RTV-60 sealant with 0.1 percent Thermolite 12 catalyst. This was verified by closed-system "bomb" tests conducted at Livermore. The sealant requirements for the MC-1127 were then changed from the Dow Corning DC 5302 - DC 5303 product to the General Electric RTV-60. This change was not made in time to be incorporated in the units fabricated for TMS re-evaluation.

TMS Re-Evaluation

Six units assembled with the new SA-793 switch and using the Dow Corning sealant were subjected to the environmental tests of TR 310916 for evaluation purposes. Part way through the testing sequence the requirement for the option provided by the MC-1127 was deleted from the Military Characteristics for the weapon. As a result, the full course of evaluation was not conducted; however, electrical checks were made on the units and the full environmental test schedule was completed. Initial contact resistances were from 0.030 to 0.032 ohm except for one unit which had 0.100 ohm before actuation and 0.038 ohm after actuation. The range of contact resistance through the entire testing sequence was 0.027 to 0.046 ohm.

Improvement Area

In order to further improve reliability of the MC-1127, it was deemed desirable to delete as much as possible of the silicone sealant from the assembly. It has been shown that silicone rubber fully cured in the mold has very low outgassing rates compared to those of silicone mastics cured in place. Since the seal between the switch cover and mounting plate contains the greatest volume of sealant, a gasket of mold-cured silicone rubber was evaluated as a possible substitution. Rubber was procured and gaskets were made in the Livermore shop.

Three units were assembled for test purposes. The gasket was used in place of the mastic sealant, and cap screws torqued to 5 ± 1 inch-pounds were used to fasten the cover to the plate. One unit contained the obsolete copper-contact SA-793 switch and the other two contained the silver-contact switches. The three units were subjected to a 20-day humidity test (per SCS-7) during which they performed satisfactorily. Switch resistance and insulation resistance values were satisfactory on all units during the test. The circuit resistances of the unit containing the copper-contact SA-793 were measured one week after its removal from himidity. Two of the four switch circuits exceeded the maximum resistance of 0.150 ohm by 0.203 ohm; the remaining two circuits measured 0.053 ohm. The unit was disassembled and inspected. No changes in the appearance of the switch materials, such as might have been induced by moisture, were noted.

Because the requirement for the MC-1127 was dropped from the system, the final configuration of the unit has no production history. The additional testing performed after the last TMS and a long-term storage surveillance showed it to be suitable for use if the requirement for it is revived.

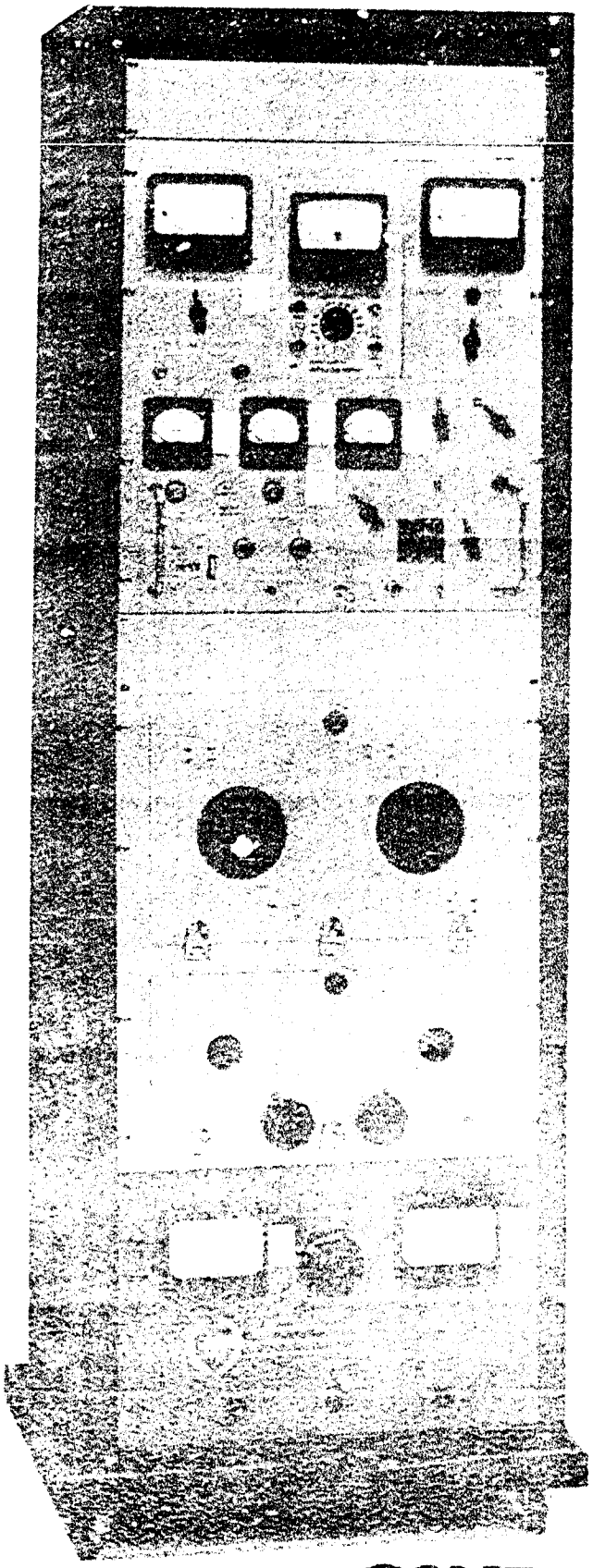

Gage and Tester

Gage L40126 checks the correctness of the mounting-hole pattern of the MC-1127. The hole pattern is correct if the four gage pins will easily enter the mounting-plate holes when the gage is placed on the unit.

The PT-780 (Figure 2) is used to check circuit resistance, insulation resistance, and the mechanical-electrical functioning of the MC-1127. Circuit resistance checks are made with a precision milliohmeter which measures the circuit during passage of a 0.100-ampere current. Insulation resistance checks are made with a vacuum-tube voltmeter which measures the voltage drop caused by leakage current flowing during the application of 500 volts DC to the circuit under test.

Mechanical-electrical function checks are performed using pilot lamps as electrical circuit loads and with a plexiglass plate on the front panel of the PT defining knob-position limits. The switch funtion is checked by the "on" and "off" condition of the pilot lamps, and the knob-positioning function of the snap-action switch mechanism is checked by comparison of the knob position after switching with the acceptable-limit marks on the panel plate.

Figure 2. The PT-780

NOTES:

1. 60-amp pulse tests carbonized silicone grease causing high contact resistance. This test was performed prior to environmental tests.
2. Three units assembled with quad-ring shaft seal and soft mastic case sealant did not leak.

UNCLASSIFIED

General Tests to Establish Environmental Integrity

Type of Test	Development Engineering	Test Made Sample	Quality Assurance	Manufacturer's Production
High Temperature	1. SCS-7 1. Alternate: Component exposed to 160° F for 50 hrs; RH 15 percent or less 2. 10 units 3. Operational checks during test 4. 7 units unsatisfactory See Note 1. 5. Org. 1611 and 1218	1. SCS 7 Alternate: Component exposed to 160° F for 50 hrs; RH - 15 percent or less 2. 8 units 3. Operational checks during test 4. Submittal #1, four units had high contact resistance, Submittal #2, four units satisfactory	Tests shall be conducted in accordance with signal tests described in the first column. Equipment used will be randomly selected from stockpile and/or production lines. Number of units tested will be in accordance with good quality practice	100 per cent functional tests production units under ambient laboratory environment See TR-310916 para. 2.1, 2.2, 2.3 Production lot acceptance is based on successful completion of temperature, shock and vibration pro 10 samples followed by humidity exposure on 5 of the 10 taken from each of two consecutive 25-unit lots. Subsequent lots are accepted on successful completion of temperature shock, vibration, and humidity tests on all samples.
Low Temperature	1. Stabilize at -65°F, hold for 48 hours 2. 8 units 3. Operational checks during final stage of test 4. 6 units unsatisfactory - see Note 1. 5. Org. 1611 and 1218	1. Stabilize at -65°F, hold for 48 hrs. 2. 8 units 3. Operational checks during test 4. Submittal #1, four units had high contact resistance, Submittal #2, four units satisfactory		
Vibration	1. Frequency range (cps) Constant amplitude or double amplitude 10-23 1.0 g 23-73.7 0.036 inch 73.7-500 10.0 g Applied along three mutually perpendicular axes. Survey, resonance, and cycling at room temperature. One hour resonance and one hour cycling. 2. 4 units 3. Operational checks after test 4. Satisfactory 5. Org. 1611 and 1218	1. Frequency Range (cps) Constant Acceleration or Double Amplitude 10-23 1.0 g 23-73.7 0.036 inch 73.7-500 10.0 g Applied along three principal axes. Survey, resonance, and cycling at room temperature. One hour resonance and one hour cycling. 2. 5 units (Submittal #2) 3. Monitor during test; operational checks after test. 4. Satisfactory		
Humidity	1. SCS-7 10 cycles as follows 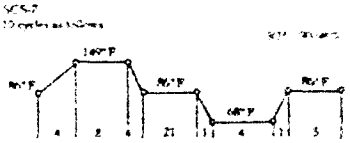 2. 10 units 3. Operational checks during test 4. 5 units (based on start of test - see Note 2) 5. Org. 1611 and 1218	1. SCS-7 10 cycles (see left) 2. 4 units (Submittal #2) 3. Operational checks during test 4. One unit had high contact resistance during test, satisfactory at test conclusion. All others satisfactory.		
Temperature Shock	1. SCS-7 Cycles as follows 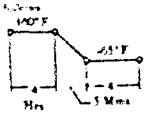 2. 8 units 3. Operational checks [illegible] 4. 5 units unsatisfactory - see Note 2 - [illegible] high contact resistance 5. Org. 1611 and 1218	1. SCS-7 [illegible] (see left) 2. 4 units (Submittal #2) 3. Operational checks following test 4. Satisfactory		
Linear Acceleration	1. SCS-7 50 g applied in both directions along each of three mutually perpendicular axes (centrifuge). 2. 10 units 3. Operational checks during test 4. 7 units unsatisfactory - see Note 1, closed contacts shifted on 5 units 5. Org. 1611 and 1218	1. SCS-7 50 g applied in both directions along each of three mutually perpendicular axes. 2. 5 units 3. Monitor during test; operational checks following test. 4. Satisfactory		
Mechanical Shock	1. SCS-7 [illegible] g impact loads [illegible] at least one shock impulse along each of three mutually perpendicular axes. [illegible] shock impulse [illegible] 50 g peak acceleration [illegible] 2. 4 units 3. Operational checks after tests 4. Satisfactory 5. Org 1611 and 1218	1. SCS-7 See [illegible] 2. 5 units 3. Monitor during test; operational checks following test. 4. Satisfactory		

UNCLASSIFIED

[redacted]

-1127 ROTARY SWITCH

UNCLASSIFIED

INSTRUCTIONS:

The purpose of this chart is to summarize in standard form information on the environmental testing components. The data asked for in the key constitutes the bulk of the chart and applies to every test. Supplementary information such as reasons for waivers or departures from test standards, justification for the acceptance of components that fail prescribed tests, and descriptions of component failures should be included in the notes.

KEY:
1. Test used
2. Number units tested
3. Functional check
4. Results
5. Reference symbol of detail report or other source material.

Auxiliary Tests to Establish Proper Choice of Materials and/or Special Applications

Type of Test	Development Engineering	Tool Made Sample	Quality Assurance	Manufacturer's Production
Fungus	1 Not required 2 3 4 5	Tests shall be conducted in accordance with the standard requirements of SCS-7 unless the official engineering test requirements differ from SCS-7. Consideration shall be given to the results and conclusions drawn from development prototype testing to reduce the total amount of environmental testing of the tool-made samples if the production contractor is the same as the development contractor. Equipment tested shall be one or more representative samples produced from production tooling in the initial stages of production. Number of items tested shall depend on the number of parallel tests to be performed in order to establish an initial capability of production items to withstand environmental exposures. Supplemental materials and protective finish laboratory tests shall be performed to establish conformance of production supplier with specifications.	Tests shall be conducted in accordance with standards described in the first column. Equipment tested will be randomly selected from stockpile and/or production lines. Number of units tested will be in accordance with good quality practice.	100 per cent functional tests production units under ambient laboratory environment.
Sunshine	1 Not required 2 3 4 5			
Sand and Dust	1. SCS-7, para. 4.13 2. 7 units 3. Operational checks after test 4. Satisfactory 5. Org. 1611 and 1218			
Salt Spray	1. SCS-7, para. 4.12 2. 7 units 3. Operational checks after test 4. 4 units leaked causing high contact resistance 5. Org. 1611 and 1218			
Explosive Vapor	1 Not required 2 3 4 5			
Rain	1 Not required 2 3 4 5			
High Pressure Immersion	1 Not required 2 3 4 5			
Low Pressure	1 Not required 2 3 4 5			
Humidity	1. SCS-7 [illegible] 2. 4 units 3. Operational checks during and after test 4. High contact resistance attributed to compressing of vinyl sleeving 5. Org. 8162			

UNCLASSIFIED [redacted]

[redacted] Appendix B 001541

LB 7911-1Q(2-60) DOCUMENT CONTROL NO. RS- PRINT NO.

NOTES
1. INFORMATION WHICH WILL BE AUTHORIZED LATER.
2. DRAWINGS PREVIOUSLY DESIGN RELEASED ON OTHER PROJECTS.
3. SPECIFICATION ISSUES AND/OR AMENDMENTS IN EFFECT ON INVITATION DATE OF QUOTATION SHALL APPLY, LATER REVISIONS MAY BE USED. PROCUREMENT SYSTEM FOR SPECIFICATIONS ARE CONTAINED IN 400,180.
4. LISTED FOR REFERENCE ONLY, SUPPLIED ONLY ON SPECIAL REQUEST
5. LISTED FOR REFERENCE ONLY, NOT SUPPLIED BY LIVERMORE LABORATORY.
6. A DUPLICATE OF THIS MASTER SHALL BE SUPPLIED FOR MANUFACTURING ONLY.
7. ANY ISSUE FURNISHED MAY BE USED INSTEAD OF THE ISSUE SPECIFIED.
9. INFORMATION RELEASED AND SUPPLIED BY RESPONSIBLE DESIGN AGENCY.

UNCLASSIFIED

DRAWING ISSUE AUTHORIZED BELOW	SIZE	CLASS	NOTE	DRAWING NUMBER	DRAWING TITLE
					NUMERICAL INDEXES
	A	UNC		NX-310916	MC-1127
	A	UNC	9	NX-352247	SA-695-2 CONNECTOR RECEPTACLE ELEC
	A	UNC	9	NX-352750	SA-793 SWITCH
	A	UNC	9	NX-352918	SA-797-11 CONNECTOR RECEPTACLE ELEC
					PRINCIPAL DRAWINGS
F	D	CDI		310916	MC-1127
					PART ASSEMBLY & DETAIL
E	D	CDI		147081	PLATE,MOUNTING ROTARY SWITCH
B	D	UNC		147082	COVER ROTARY SWITCH
E	D	UNC		147126	WIRING HARNESS
A	A	UNC		147939	PLATE, IDENTIFICATION
					REFERENCE DRAWINGS
A	B	UNC		146711	SCHEMATIC, MC-1127
					COMMERCIAL PARTS
A	A	UNC	7	833438	PACKING, PREFORMED
A	A	UNC	7	833945	CAP-PLUG,PROTECT.,DUST & MOIST SEAL
B	A	UNC	7	851095	AN960-10L WASHER FLAT
B	A	UNC	7	851352	MS171436 PIN, SPRING
A	A	UNC	7	853749	MS 20365-1032 NUT, SELF-LOCKING HEX
A	A	UNC	7	853766	SCREW, MACHINE
A	A	UNC	7	854041	MS29513-22, PACKING,PREFORMED
A	A	UNC	7	854504	MS35430-5 TERMINAL, LUG
					SANDIA CORP.
					SPECIFICATIONS
C	A	UNC	7	400056	MARKING ELECTRICAL WIRES AND CABLES
A	A	UNC	7	831554	CAP-PLUG, PROTECT. DUST & MOIST SEAL
A	A	UNC	7	8 853282	MS35209-56 SCREW, MACHINE PAN HD.

LATEST DWG. ISSUES AS OF 4/25/60	DATE	APP'D BY	NX ISSUE	NUMERICAL INDEX FOR
	4/29		E	MC-1127

CHANGE AUTHORITY

ARCHIVE

5Y | SIZE A | SHEET 1 OF 3

NX- 310916 UNCLASSIFIED

[redacted]

13

[redacted]

LB 7811-1Q(2-60) UNCLASSIFIED DOCUMENT CONTROL NO. 001542 PRINT NO.

RS-

NOTES
1. INFORMATION WHICH WILL BE AUTHORIZED LATER.
2. DRAWINGS PREVIOUSLY DESIGN RELEASED ON OTHER PROJECTS.
3. SPECIFICATION ISSUES AND/OR AMENDMENTS IN EFFECT ON INVITATION DATE OF QUOTATION SHALL APPLY, LATER REVISIONS MAY BE USED. PROCUREMENT SYSTEM FOR SPECIFICATIONS ARE CONTAINED IN 400,180.
4. LISTED FOR REFERENCE ONLY, SUPPLIED ONLY ON SPECIAL REQUEST
5. LISTED FOR REFERENCE ONLY, NOT SUPPLIED BY LIVERMORE LABORATORY.
6. A DUPLICATE OF THIS MASTER SHALL BE SUPPLIED FOR MANUFACTURING ONLY.
7. ANY ISSUE FURNISHED MAY BE USED INSTEAD OF THE ISSUE SPECIFIED.
9. INFORMATION RELEASED AND SUPPLIED BY RESPONSIBLE DESIGN AGENCY.

DRAWING ISSUE AUTHORIZED BELOW	SIZE	CLASS	NOTE	DRAWING NUMBER	DRAWING TITLE
D	A	UNC	7	400062	ALUMINUM ALLOY, SHEET, PLATE, ALT MTLS
E	A	UNC	7	400079	MARKING GENERAL PURPOSE
B	A	UNC	7	400080	INSTALLATION,ELECTRICAL CONNECTORS
B	A	UNC	7	400085	MATL LACING & TYING ELECT EQUIP
C	A	UNC	7	400088	DESIGN REQUIREMENTS INTERPRETATION
A	A	UNC	7	400093	FABRICATION WIRING HARNESS
A	A	UNC	7	400118	CABLE FABRICATION SHIELDED & UNSHIEL
C	A	UNC	7	400126	INSTALLATION RIVET
E	A	UNC	7	400128	SOLDERING ELECTRICAL CONNECTIONS
G	A	UNC	7	400137	PROCESS SPEC.ID,MC & ANCILLARY EQUIP
C	A	UNC		QS-310916	QUAL SPEC FOR MC-1127
	A	UNC		SC 7012SP	GEN MANUFACTURING INFO FOR SUPPLIERS
	A	UNC		SC 7016SP	TOLERANCE OF POSITION AND FORM MMC
A	A	UNC		SP-221592	MSPQ TUBING, INS, HEAT SHRINKING
E(	A	CDI		TR-310916	TEST REQ FOR MC-1127
					GOVERMNENT SPECS AND DRAWINGS
			3	AN 470	RIVET, UNIVERSAL HEAD, ALUMINUM ALLOY
			3	MIL-I-3190	INSUL SLEEVE, ELE, FLEXIBLE, TREATED

	DATE	APP'D BY	NX ISSUE	NUMERICAL INDEX FOR
LATEST DWG. ISSUES AS OF 4/25/60	8/29		E	MC-1127

CHANGE AUTHORITY

ARCHIVE

5Y | SIZE A | SHEET 2 OF 3

NX-310916 UNCLASSIFIED

[redacted]

14

[redacted]

LB 7811-1Q(2-60) UNCLASSIFIED

DOCUMENT CONTROL NO. 001543 PRINT NO.

RS-

NOTES
1. INFORMATION WHICH WILL BE AUTHORIZED LATER.
2. DRAWINGS PREVIOUSLY DESIGN RELEASED ON OTHER PROJECTS.
3. SPECIFICATION ISSUES AND/OR AMENDMENTS IN EFFECT ON INVITATION DATE OF QUOTATION SHALL APPLY, LATER REVISIONS MAY BE USED. PROCUREMENT SYSTEM FOR SPECIFICATIONS ARE CONTAINED IN 400,180.
4. LISTED FOR REFERENCE ONLY, SUPPLIED ONLY ON SPECIAL REQUEST
5. LISTED FOR REFERENCE ONLY, NOT SUPPLIED BY LIVERMORE LABORATORY.
6. A DUPLICATE OF THIS MASTER SHALL BE SUPPLIED FOR MANUFACTURING ONLY.
7. ANY ISSUE FURNISHED MAY BE USED INSTEAD OF THE ISSUE SPECIFIED.
9. INFORMATION RELEASED AND SUPPLIED BY RESPONSIBLE DESIGN AGENCY

DRAWING ISSUE AUTHORIZED BELOW	SIZE	CLASS	NOTE	DRAWING NUMBER	DRAWING TITLE
			3	MIL-E-005272	ENVIR TESTS,AERO EQUIP,GEN SPEC FOR
			3	MIL-I-7444	INSULATION,SLV,ELECTRICAL, FLEXIBLE
			3	MIL-A-8625	ANODIC COAT FOR ALUMINUM & AL ALLOYS
			3	MIL-W-16878	WIRE ELEC INSULATED HI TEMP
			3	MS 20426	RIVET,100 C'SUNK, ALUMINUM ALY
			3	MS 20601	RIVET,BLIND,SELF-PLUGGING, FLUSH-HEAD
			3	QQ A-327	ALUMINUM ALLOY 61S PLATE / SHEET
					SOCIETY SPECIFICATIONS
				ASTM D 570	WATER ABSORPTION OF PLASTICS, TEST
				ASTM D 876	METHODS OF TESTING NONRIGID TUBING
				NAS 523	RIVET CODE
			3	QQ B 613	BRASS LEAD, NON-LEAD, PLATE BAR, SHEET

	DATE	APP'D BY	NX ISSUE	NUMERICAL INDEX FOR
LATEST DWG. ISSUES AS OF 4/25/60	4/29		E	MC-1127

CHANGE AUTHORITY

ARCHIVE

5Y	SIZE A	SHEET 3 OF 3

NX-310916 UNCLASSIFIED

[redacted]

15

UNCLASSIFIED

1. GENERAL

1.1 Test Facilities. Measurements of values specified herein shall be made with instruments having sufficient accuracy to insure the quality of measurements indicated by the specified tolerances of paragraph 1.3, unless otherwise specified. Test chambers shall have a volume of at least twice that of the equipment being tested therein and shall be arranged so that a minimum of radiant heat or circulating air impinges directly on the equipment. Unless otherwise specified, tests shall be performed at room atmospheric conditions.

1.2 Definitions.

1.2.1 RETARD Position. When the switch knob is in or is rotated to the counterclockwise position, the switch contacts are closed. Hereafter in this specification, this position will be referred to as the RETARD position.

1.2.2 FREE FALL Position. When the switch knob is in or is rotated to the clockwise position, the switch contacts are open. Hereafter in this specification, this position will be referred to as the FREE FALL position.

1.3 Tolerances on Environmental Conditions. Unless otherwise specified, environmental test conditions shall be held within the following limits:

Temperature:	±5°F
Relative Humidity:	±5 percentage points
Vibration Tolerance:	
Amplitude:	±5 percent
Frequency:	±2 percent (shall approximate a sine wave)
Voltage:	±2 percent
Current:	±2 percent
Resistance:	±3 percent

1.4 Drawings. MC-1127 schematic drawing 146711 (REF) shall be used as a reference drawing for the tests specified herein. The referenced pins are those of connector J1 indicated on the schematic drawing.

1.5 In-Process Tests. Any component part of the MC-1127 may be tested within the rated limits of the component. In-process ohmmeter tests may be performed to ascertain that an assembly is properly wired. Any specific test outlined herein may be performed on the assembly prior to riveting at the discretion of

ISS	AUTHORIZATION	CHK ENG.	DATE
C	Rev & Retyped PER ECO-MC-1127-5-C1 REV 1	[illegible] CTN	5/1/59 5/1/59
D	MC-1127-7-C4	[illegible]	5/20/59
E	MC-1127-18C3	[illegible]	5/21/59 3/10/60
F	MC-1127-13C4, Rev 1	[illegible]	3/10/60 4/12/60

ACTION	ORG.	INIT.	DATE
TYPE	4422	fb	3/11
APPD.	4422	GJW	11/7/58
APPD.	4422	EAT	3/11/59
APPD.	1218	WR	1/30
APPD.	1218	PFJ	1/30
APPD.	1218	RG	1/30
APPD.	8162	JBW	1/30
APPD.	2544	HCR	3/11
APPD.	1592	WFJ	3/2/59
APPD.			
APPD.			

DWG. CLASSIFICATION [redacted]

TITLE TEST REQUIREMENTS FOR MC-1127

DWG. SIZE

DRAWING NO. TR-310916

SHEET 1 OF 8

UNCLASSIFIED

[redacted]

7727

the supplier. The performance requirements of the various tests shall not apply to the assembly prior to riveting. This paragraph is strictly for the use of the supplier in fabrication of the MC-1127 and is not a basis for final acceptance.

2. TESTS

UNCLASSIFIED

Each MC-1127 (hereafter in this specification called the assembly) shall be capable of meeting the requirements of the following tests:

2.1 Continuity and Circuit Resistance. The resistance of each circuit as listed below shall be measured by the voltmeter-ammeter or equivalent method using a maintained 0.1 ampere current from a maximum source of 6 volts DC.

2.1.1 Switch in FREE FALL Position.

From Pin	To Pin	Circuit Resistance (ohms)
C	D	Open circuit
F	D	Open circuit
B	E	Open circuit
G	E	Open circuit
A	H	0.01 maximum

2.1.2 Switch in RETARD Position. The current specified in 2.1 shall be applied only after MC-1127 switch is closed.

From Pin	To Pin	Circuit Resistance (Ohms)
C	D	0.15 maximum
F	D	0.15 maximum
B	E	0.15 maximum
G	E	0.15 maximum
A	H	0.01 maximum

2.1.3 The tests specified in 2.1, 2.1.1, and 2.1.2 shall be considered one cycle. This cycle shall be repeated two times for a total of three cycles. All leads shall be as short as practicably possible.

2.2 Insulation Resistance. With the switch in the RETARD position, a potential of 500 ±25 volts DC shall be applied for 15 seconds minimum between each circuit as indicated on drawing 146711 and

ISS	AUTHORIZATION	CHK ENG.	DATE	ACTION	ORG.	INIT.	DATE
C	Rev & Retyped PER ECO-MC-1127-5-C1 REV 1	[illegible]	5/1/59	TYPE	4422	[illegible]	3/11
D	MC-1127-7-C4	[illegible]	5/20/59	APPD.			
E	MC-1127-18C3		3-10-60	APPD.			
F				APPD.			
				APPD.			
				APPD.			
				APPD.			
				APPD.			
				APPD.			
				APPD.			
				APPD.			
				APPD.			

DWG. CLASSIFICATION [redacted]

TITLE TEST REQUIREMENTS FOR MC-1127

DWG. SIZE

DRAWING NO. TR-310916

SHEET 2 OF 8

UNCLASSIFIED

[redacted]

all remaining isolated circuits shorted to the case. The insulation leakage current shall not exceed 50 microamperes.

2.3 Mechanical-Electrical Function. During this test, the switch must be firmly assembled (including 'O' ring) to the component mounting plate. The partial assembly or complete MC-1127 must be firmly fastened down during test. The switch shall be operated 50 ±10 operations before the test proceeds. Connect the switch circuits (2) to two continuity lamp indicators (this circuit shall draw 150 to 250 ma at 6 to 32 volts).

NOTE: During normal operation, the switch has a rotary snap action when the switch knob is rotated from one position past the other position. After switching, the knob snaps to the closest indicated position when released. After release, the knob shall point to the indicator line on the switch face within the following limits: 5° toward the other position or 20° in the opposite direction. The action and limits are the same in either switching direction.

2.3.1 Operate the switch knob of the assembly so that the pointer indicates the FREE FALL position. Now rotate the knob slowly counterclockwise toward the RETARD position without actuating the snap-action mechanism. If the knob pointer does not rotate back of its own accord, when released, to the original position, the switch assembly or component shall be rejected.

2.3.2 Operate the switch knob of the assembly so that the pointer indicates the RETARD position and repeat 2.3.1 except that the knob shall be rotated in a clockwise direction toward the FREE FALL position.

2.4 High Temperature Test. The assembly with switch in RETARD position, shall be placed in a suitable chamber. The chamber temperature shall be raised to 160°F at a maximum relative humidity of 5 percent. The temperature of the assembly shall be stabilized and maintained at this level for 50 hours. While at this temperature, it shall meet the requirements of 2.1.2, and 2.2. Upon return to room conditions, visual inspection shall reveal no damage which might ultimately result in malfunction.

2.5 Low Temperature. The assembly with switch in RETARD position shall be placed in a suitable chamber. Control of humidity is not significant. The chamber temperature shall be reduced to -65°F. The temperature of the assembly shall be stabilized and maintained at this level for 48 hours. While at this temperature

ISS	AUTHORIZATION	CHK ENG.	DATE	ACTION	ORG.	INIT.	DATE
C	Rev & Retyped per XMC-MC-1127 5-C1 REV 1	JMW	5/1/59	TYPE	6422	fb	3/11
D	MC-1127-7-C4	JMW	5/20/59	APPD.			
E	MC-1127-18C3		3-10-60	APPD.			
F				APPD.			
				APPD.			
				APPD.			
				APPD.			
				APPD.			
				APPD			
				APPD.			

DWG. CLASSIFICATION [redacted]

TITLE TEST REQUIREMENTS FOR MC-1127

DWG. SIZE

DRAWING NO. TR-310916

SHEET 3 OF 8

[redacted]

it shall meet the requirements of 2.1.2 and 2.2. Upon return to room conditions, visual inspection shall reveal no damage which might ultimately result in malfunction.

2.6 Temperature Shock. The assembly with switch in RETARD position shall be tested in accordance with MIL-E-5272 (USAF), Section 4.3.1; except that the high temperature shall be 160°F, and the low temperature shall be -65°F. Upon completion of this test and within a period of 5 minutes, the assembly shall meet the requirements of 2.1.2, and 2.2. Visual inspection shall reveal no damage which might ultimately result in malfunction.

2.7 Humidity Test.

2.7.1 Preconditioning. The assembly shall be placed in a chamber that has been preheated to 130°F and has a relative humidity of 15% maximum. The assembly shall remain in the chamber for a period of 24 hours. Immediately upon withdrawal, the assembly shall be placed in a suitable humidity chamber and subjected to ten humidity cycles in accordance with 2.7.2 with no lapse of time between cycles.

2.7.2 Humidity Cycle. While the assembly with switch in RETARD position is in the chamber, the humidity shall be maintained at 90 to 98 percent relative humidity throughout the following cycle:

a. The temperature shall be raised to 149°F within four hours and maintained at this point for eight hours.

b. The temperature shall then be reduced to 86°F within four hours and maintained at this point for 21 hours.

c. The temperature shall be reduced to 68°F within one hour and maintained at this point for four hours.

d. The temperature shall then be raised to 86°F within one hour and maintained at this point for five hours.

e. Following completion of test and within 4 hours, the assembly shall meet the requirements of 2.1.2 and 2.2.

2.7.3 Inspection Following Test. Upon completion of the above tests, parts of the assembly shall reveal no deterioration of materials, such as corrosion and water absorption. or potential deterioration because of accumulation of moisture which

ISS	AUTHORIZATION	CHK ENG.	DATE	ACTION	ORG.	INIT.	DATE
C	Rev & Retyped per ECO-MC-1127 5-C1 REV 1	[illegible]	5/1/59	TYPE	4422	fb	3/11
D	MC-1127-7-C4	[illegible]	5/20/59	APPD.			
E	MC-1127-18C3		3-10-60	APPD.			
F				APPD.			
				APPD.			
				APPD.			
				APPD.			
				APPD.			
				APPD.			
				APPD.			

DWG. CLASSIFICATION

[redacted]

TITLE TEST REQUIREMENTS FOR MC-1127

DWG. SIZE

DRAWING NO. TR -310916

SHEET 4 OF 8

might ultimately result in malfunction.

2.8 Vibration. The assembly with switch in RETARD position shall be mounted by its mounting flange. The temperature of the assembly shall be stabilized before beginning tests. During each test, the switch unit shall be monitored with an oscilloscope or equivalent. With switch in RETARD position, no contact or circuit opening shall be allowed. The assembly shall be operated in accordance with 2.1.2, and 2.2 following each test period. At the conclusion of these tests, visual inspection of the assembly shall reveal no damage which migh ultimately result in malfunction.

2.8.1 Resonance.

2.8.1.1 Survey. Resonant conditions (frequency, axis, temperature) shall be determined by vibrating the assembly along each of three mutually perpendicular axes at toom temperature through a range of frequencies from 10 to 500 to 10 cps varied slowly at accelerations or amplitudes not to exceed those in Table I.

2.8.1.2 Vibration at Resonance. The assembly shall be vibrated at each resonant condition observed in 2.8.1.1 at the double amplitude or acceleration indicated in Table I. The period of vibration shall be 60 minutes for resonances occurring at room temperature. If more than one resonant frequency was encountered at the same temperature along one axis, the period of vibration as specified above for this temperature may be divided among the different frequencies or used to cover the frequency which caused the most severe resonance. The method considered most likely to produce failure should be selected. If no resonant conditions are found, increase the time in 2.8.2 to two hours.

TABLE I

Frequency range (cps)	Constant acceleration or double amplitude
10 - 23	1.0g
23 - 73.7	0.036 inch
73.7 - 500	10.0g

ISS	AUTHORIZATION	CHK ENG.	DATE	ACTION	ORG.	INIT.	DATE
C	Rev & Retyped per ECO-MC-1127 5-C1 REV 1	[illegible]	5/1/59	TYPE	4422	fb	3/11
D	MC-1127-7-C4	[illegible]	5/20/59	APPD.			
E	MC-1127-18C3		3-10-60	APPD.			
F				APPD.			
				APPD.			
				APPD.			
				APPD.			
				APPD.			
				APPD.			
				APPD.			
				APPD.			

DWG. CLASSIFICATION

[redacted]

TITLE TEST REQUIREMENTS FOR MC-1127

DWG. SIZE

DRAWING NO. TR-310916

SHEET 5 OF 8

2.8.2 Cycling. The assembly shall be vibrated through a frequency range of 10 to 500 to 10 cps in 15 minute cycles at an applied double amplitude of 0.036 inch in the frequency range of 10 to 73.7 cps and an applied constant acceleration of 10g in the 73.7 to 500 cps range. Vibration shall be applied along each of three mutually perpendicular axes for one hour at room temperature.

2.9 Acceleration and Shock. The assembly with switch in RETARD position shall be mounted in such a manner as to simulate service mounting.

2.9.1 Linear Acceleration. The assembly shall be subjected to a constant acceleration of 50g for at least 60 seconds applied in both directions along each of three mutually perpendicular axes. During each acceleration period, the switch unit shall be monitored using an oscilloscope or equivalent. With switch in RETARD position, no contact or circuit opening shall be allowed. The assembly shall meet the requirements of 2.1.2, and 2.2 after each acceleration period.

2.9.2 Shock. The assembly shall be subjected to a total of 18 impact shocks of 15g each. Of this total, three shock impulses shall be applied in each direction along each of the three mutually perpendicular axes of the assembly. Each shock impulse shall reach its maximum in 5-1/2 milliseconds and shall have pulse time of 11 ±1 milliseconds. During each shock impulse, the switch unit shall be monitored using an oscilloscope or equivalent. With switch in RETARD position, no contact or circuit opening shall be allowed. Upon completion of the test, the assembly shall meet the requirements of 2.1.2, and 2.2.

ISS	AUTHORIZATION	CHK ENG.	DATE	ACTION	ORG.	INIT.	DATE
C	Rev & Retyped per ECO-MC-1127 5-C1 REV 1	JPW	5/1/59	TYPE	1422	fb	3/11
D	MC-1127-7-C4	JPW	5/20/59	APPD.			
E	MC-1127-16C3		5-10-60	APPD.			
F				APPD.			
				APPD.			
				APPD.			
				APPD.			
				APPD.			
				APPD.			
				APPD.			
				APPD.			

DWG. CLASSIFICATION [redacted]

TITLE TEST REQUIREMENTS FOR MC-1127

DWG. SIZE

DRAWING NO. TR-310916

SHEET 6 OF 8

UNCLASSIFIED

[redacted] DOCUMENT CONTROL NO. RS- PRINT NO. 001550

SECTION 1 INSTRUCTIONS FOR RECORDING TEST DATA ON FORM LB 7816-J DF-310916-01

1 Item	5 NX	6 Dwg. No. 6A	Part Suf. 6B	7 Spec. No. 7A	Iss. 7B	4 Lot No.	12 Disposition ** See Instructions

9 Form	2 Mfr. 2A	Serial No. 2B	Date 2C	11 Test Date Mo	Day	Yr	3 Test

SECTION 2

THESE INSTRUCTIONS APPLY TO: MC-1127

DATA FORM: SAMPLING PER QS PARAGRAPH 3.2

THE PRINTED DATA FORM(S) INCLUDE INFORMATION REQUIRED FOR THE FOLLOWING SPACES:

1, 3, 5, 6A, 7A, and 9

THE PRODUCTION AGENCY SHALL COMPLETE THE INFORMATION FOR THE FOLLOWING SPACES:

2, 4, 6B, 7B, 11, and 12

**DISPOSITION CODES (FOR USE IN CONJUNCTION WITH SPACE 12):

1- REJECT - DUE TO REWORK
2- REJECT - MECHANICAL FUNCTION
3- REJECT - ELECTRICAL FUNCTION
4- D-TEST REJECT - MECHANICAL
5- D-TEST REJECT - ELECTRICAL
6- OTHER REJECTS - EXPLAIN IF FEASIBLE
7- HELD FOR SURVEILLANCE
8- HELD FOR MANUFACTURING CONTROL
9- OTHER DISPOSITIONS
10- D-TESTED
11- ACCEPTED

SECTION 3 DISTRIBUTION _____ Signature of Inspector

ISS	AUTHORIZATION	CHK ENG.	DATE	ACTION	ORG.	INIT.	DATE
F				TYPE		bac	
				APPD			
				APPD.			
				APPD.			
				APPD.			
				APPD.			
				APPD.			
				APPD.			
				APPD.			
				APPD.			
				APPD.			

[redacted]

TITLE TEST REQUIREMENTS FOR MC-1127

DWG. SIZE A

DRAWING NO. TR-310916

SHEET 2 OF 8

UNCLASSIFIED

[redacted]

UNCLASSIFIED [redacted]

SECTION 1 — DATA FORM DF-310916-02

1 Item	5 NX	6 Dwg. No.	Part Svf.	7 Spec. No.	Iss.	4 Lot No.	12 Disposition ** See Instructions
MC-1127	310916	310916		TR-310916			

9 Form	2 Mfr.	Serial No.	Date	11 Test Date Mo	Day	Yr	3 Test
ISS 01							SAMPLING PER QS PARA 3.2.

SECTION 2

PARAGRAPH	TEST	ACC	REJ	DISP. CODE
2.1	CONTINUITY AND CIRCUIT RESISTANCE			
	2.1.1 SWITCH IN OPEN POSITION			
	2.1.2 SWITCH IN CLOSED POSITION			
2.2	INSULATION RESISTANCE			
2.3	MECH - ELECT. FUNCTION			
2.6	TEMPERATURE SHOCK			
	2.1.2			
	2.2			
2.7	HUMIDITY TEST			
	2.1.2			
	2.2			
2.8	VIBRATION			
2.8.1.1	RESONANT SURVEY			
	2.1.2			
	2.2			
2.8.1.2	VIBRATION AT RESONANCE			
	2.1.2			
	2.2			
2.8.2	CYCLING			
	2.1.2			
	2.2			

SECTION 3 DISTRIBUTION _____ Signature of Inspector

ORIGINAL COPY TO [illegible] PACK, [illegible] LABORATORY, ATTN: 8161
ONE COPY ATTACHED TO [illegible] OF INSPECTION FOR DATA

ISS	AUTHORIZATION	CHK ENG.	DATE	ACTION	ORG.	INIT.	DATE
F				TYPE		bac	
				APPD.			
				APPD.			
				APPD.			
				APPD.			
				APPD.			
				APPD.			
				APPD.			
				APPD.			
				APPD.			
				APPD.			

[redacted]

TITLE TEST REQUIREMENTS FOR MC-1127

DWG. SIZE A

DRAWING NO. TR 310916

SHEET 8 OF 8

UNCLASSIFIED

[redacted]

23

LB-5420C(5-60) DOCUMENT [redacted] PRINT NO. 001552

ISS	DESCRIPTION	DATE	CHKR	ENG
5	310916-32-C3	8-17-60	[illegible]	[illegible]

UNCLASSIFIED

SHEET	1	2	3	4
ISSUE	3	3	3	3

ORG	INIT	DATE
816-2	[illegible]	8-17-60
7922	[illegible]	11-20-58
7922	[illegible]	3-11-59
1218	[illegible]	1-30
1218	[illegible]	1-30
1218	[illegible]	1-30
8162	[illegible]	1-30-59
2549	[illegible]	3-11-59
1597	[illegible]	3-3-59

SUPERSEDES

FIRST APPLICATION

CLASSIFICATION CATEGORY

UNCLASSIFIED

CLASSIFICATION

UNCLASSIFIED

TITLE QUALITY SPECIFICATION FOR NC-1107

DWG. SIZE A

DRAWING NO. LB-310916

SHEET 1 OF 4

[redacted]

TM

24

[redacted]

UNCLASSIFIED

001553

1 GENERAL

1.1 Testing Responsibility. — All tests shall be performed or subcontracted by the supplier. The supplier shall not subcontract any of the testing without the prior written approval of Sandia Corporation. Unless otherwise approved by Sandia Corporation, tests in accordance with 2 and 3.2 shall be performed before the affected lot is shipped.

1.2 Quality Surveys. — The supplier shall permit periodic quality surveys at the point of manufacture by authorized representatives of Sandia Corporation and the buyer. The purpose of these surveys will be to obtain evidence of the supplier's continued conformance to the requirements and intent of this specification.

1.3 Test Records. — The supplier shall provide records of all tests including those on rejected units on Form SC-6897-F.

1.4 Serial Numbers. — Units shall be serial-numbered in sequence of manufacture and shall be permanently marked with respective serial numbers before starting tests cited in 2. Once assigned, a serial number shall not be reassigned to another unit.

1.5 Lot. — A lot shall consist of a maximum of 200 units manufactured or assembled in sequence without changes in design, materials, tooling, or processes. The basis of the lot formation shall not be shipment lots unless it can be demonstrated that shipment lots are homogeneous. Each lot shall be identified to distinguish it from other lots. The supplier shall inform the buyer of the identification used for each lot.

1.6 Rejected Lots. — Whenever a lot is rejected, the supplier shall hold the lot and immediately notify Sandia Corporation and the buyer. If after review of the test results, Sandia Corporation determines that the remainder of the lot may be accepted after additional testing, the supplier shall take the prescribed action (confirmed in writing) and resubmit the remainder of the lot.

2 TESTS ON ALL UNITS

Each MC-1127 shall be subjected to and shall meet the requirements of the tests specified in Paragraphs 2.1, 2.2 and 2.3 of TR-310916. Units not meeting these requirements shall be rejected. Rejected units shall not be reworked or resubmitted.

3 TESTS ON SAMPLES

Each unit in a lot shall be capable of meeting the requirements of the tests on samples listed in 3.2. However, acceptance of the lot will be based upon the results of the sampling test procedure in 3.2.

ISS.	AUTHORIZATION	CHK. ENG.	DATE	ACTION	ORG.	INIT.	DATE
1			11/20/59	TYPE	7422	fb	11/20
A	Revised		3/11/59	APPD.	7422		11/20/59
B	MC-1127-6-C4		3/20/59	APPD.	7422		3/11/59
C	MC-1127-9-C4		5/21/59	APPD.	1218		1-30
D	MC-1127-23-C3		5/17/60	APPD.	1218		1-30
E	310916-3-C3		5/17/60	APPD.	1218		1-30
				APPD.	8162		1/20/59
				APPD.	2544		5/1/60
				APPD.	1592		3/3/9
				APPD.			
				APPD.			

DWG CLASSIFICATION

UNCLASSIFIED

TITLE

QUALITY SPECIFICATION FOR MC-1127

5Y | DWG SIZE A

DRAWING NO. QS-310916

SHEET 2 OF 4

[redacted]

3.1 Selection of Samples. Each lot shall be sampled at random (i.e., each unit in a lot shall have an equal chance of being drawn as part of a sample) for testing in accordance with the requirements in 3.2.

3.2 Sampling Test Procedure. A sample size as shown below shall be selected from each lot for each group of tests. Tests are indicated by the paragraph in which they appear in TR-310916 and shall be performed in the order shown for each group. Tests marked 'D' are destructive. If failures exceed 'Allowable Failures', the lot shall be rejected.

a. At the start of production and after the completion of the tests indicated in 2.1, 2.2, and 2.3 of TR-310916, two consecutive lots shall be formed each consisting of 25 units maximum, 10 units minimum. Ten units selected per paragraph 3.1 from each lot shall be subjected to and shall pass the tests of 2.6 and 2.8 of TR-310916. Randomly select five units from each group of ten and subject them to 2.7 of TR-310916. After successful completion of these tests, the lot sampling procedure of paragraph 3.2.b shall be initiated.

b. Lots shall be formed of subsequent units as indicated in 1.5. A sample of three units if the lot consists of 16 units or less, or four units if the lot consists of 17 to 200 units, shall be selected from each lot and subjected to the tests and the sequence as indicated below.

Lot Size	Number of Samples tested	Tests from TR-310916	Allowable failures
Through 16	3	2.6, 2.7(D), 2.8(D)	0
17 - 200	4	2.6, 2.7(D), 2.8(D)	0

c. If a lot is rejected, consider the next lot produced as the first lot and proceed per paragraph 3.2.a.

3.2.1 Modification of Sampling Plans. The supplier may submit alternate sampling plans. However, the sampling plan specified in 3.2 shall be used until written approval to use an alternate plan has been received from Sandia Corporation.

3.3 Destructively Tested Units. Units subjected to the tests indicated in 3.2 are considered to have been destructively tested. Units subjected to destructive tests and the package in which they are contained shall be marked 'D Tested'. Units failing 'D Test' and their test records shall be forwarded to Sandia Corporation.

ISS	AUTHORIZATION	CHK ENG	DATE	ACTION	ORG.	INIT	DATE
D				TYPE		bac	
E				APPD.			
				APPD.			
				APPD.			
				APPD.			
				APPD.			
				APPD.			
				APPD.			
				APPD.			
				APPD.			
				[redacted]			

DWG. CLASSIFICATION

UNCLASSIFIED

TITLE QUALITY SPECIFICATION FOR MC-1127

5X

DWG SIZE A

DRAWING NO. RS-310916

SHEET 3 OF 4

[redacted]

UNCLASSIFIED

001555

4. QUALIFICATION TESTS

The remainder of the tests in TR-310916, not specifically referred to above, are engineering evaluation tests. All of the units shall be capable of passing these tests at any time.

D							
E							

bac

UNCLASSIFIED

TITLE QUALITY SPECIFICATION FOR MC-1127

DWG SIZE	DRAWING NO.
A	QS-310916
	SHEET 4 OF 4

[redacted]

27

REFERENCES

1. Doyle, J. R., Characteristics and Development Report for the MC-1127 Rotary Switch, Sandia Corporation, SCDR 42-60, (CDI), January 1960.

2. Murdoch, R. O., Laboratory Report No. 234, Sandia Corporation, (U), March 23, 1960.

3. Engineering Report 2357 Submitted by Dayton T. Brown, Inc., Sandia Corporation Report No. T-23277 (U), February 10, 1960.

4. Berry, Fjelseth, and Jones, Contact Resistance and the Effects of Materials and Process Variables on Contact Resistance and Contact Reliability in Switching Devices, Sandia Corporation, RS-8233 (2208), (U), February 17, 1960.

5. Jones, F. L., Physics of Electrical Contacts New York: 1956, Oxford University Press .

6. Holm, E., and Holm, R., Electric Contacts Handbook New York: 1958, Springer Publishing Co., Inc.