W.O.# 489610
Total Copies -16
0011455

[redacted]
UNCLASSIFIED

CHARACTERISTICS AND DEVELOPMENT REPORT FOR THE H-761 WARHEAD PROTECTIVE CAN

INVENTORIED
MAR 8 '65
3427-1

SCDR 54-60

[redacted]

Ref Sym: 3423 (123)

D. R. Kvarnstrom, 1284-1

INVENTORIED
MAR 1 1966
3428-3

February 1960

Approved by: R H Schultz
R. H. Schultz, 1286

ABSTRACT

The design intent, product characteristics, and development history of the H-761 warhead protective can are described.

INVENTORIED
SEPT 8 1960
3427-3

[redacted]

[redacted]

SANDIA SYSTEMATIC DECLASSIFICATION REVIEW DOWNGRADING OR DECLASSIFICATION STAMP	
CLASSIFICATION CHANGED TO: U Carmela Gallegos 10/22/97 PERSON CHANGING MARKING & DATE Mildred Selph 11/11/97 PERSON VERIFYING MARKING & DATE	AUTHORITY: W.C. Layne RECORD ID: 985N0220 DATED: 10/20/97

DECLASSIFICATION REVIEW	
10/8/97 RBCrann 10/20/97 W. Layne	Determination (Circle Numbers): 1. Classification Retained 8. Classification Changed to: UNCL Contains No Classified Information UNCLASSIFIED

[redacted]
UNCLASSIFIED

[redacted]

UNCLASSIFIED

DISTRIBUTION:

1/16A - J. W. Jones, 1220, Attn: V. E. Blake, 1225
2/16A - R. H. Schultz, 1280, Attn: P. Syroid, 1284
3/16A - W. C. Kraft, 2550, Attn: R. C. Gauerke, 2552
4/16A - M. G. Randle, 3421-2
5/16A - R. K. Smeltzer, 3421-3
6/16A - W. F. Carstens, 3423
7-16/16A - Distribution, 3466-1

[redacted]

[redacted]

UNCLASSIFIED

CHARACTERISTICS AND DEVELOPMENT REPORT FOR THE H-761 WARHEAD PROTECTIVE CAN

1. Introduction

The purpose of this document is to provide a current authoritative record of the design intent, product characteristics, and development history for the H-761. The product definition drawings and specifications which are the basis for production contracts are listed on NX-320155.

2. Description

2.1 Purpose: The H-761 Warhead Protective Can (Figure 1) has two primary purposes, one being to protect the warhead case and the other to distribute handling and shipping loads to proper areas of the warhead.

2.2 Physical Characteristics: The H-761 has two basic parts: top and bottom metal container halves. They are connected by means of a bolt flange and completely enclose the warhead. This item also has a sling for lifting the assembly.

The over-all dimensions of the H-761 are approximately 14 inches in diameter by 16 3/4 inches high, and its weight is approximately 15 pounds.

3. Design Intent

The objective of this design is to provide a can that would serve the purpose described above. protecting the warhead case, the intent is to protect the case from localized accidental handling loads. A typical localized loading would occur if the warhead were bumped against a sharp edge of a work bench. It also is imperative that this container distribute handling and storage loads to the areas of the warhead specified by Los Alamos. Secondary objectives of this design are to relieve loads in the area of the detonator and to provide a sling for handling. The environmental requirements of this container are those which are normal to warhead handling and storage. This will include shipment by air, rail, and ship, and storage in extreme climatic conditions.

This container was designed to meet the environmental requirements of Paragraphs 2.6, 3.4.1, and 3.4.2 of SCS-5. Due to test equipment limitations, the vibration requirement was met in the 10-55 cps range only.

UNCLASSIFIED

[redacted]

[redacted]

UNCLASSIFIED

4. Product Characteristics

Product characteristics and capabilities are as outlined above. The H-761 is limited to a specific function and will not be adaptable to other uses.

5. Test and Quality Requirements

This item, in conjunction with the H-651 shipping container, the H-760 shock absorbing pads, and the XW-54 warhead, was subjected to ramp, drop, and vibration tests per SCS-5. The maximum G loading seen during these tests was 42 G on a 7 mph ramp test. Upon completion of these tests, the package was sent to LASL so that a post-mortem inspection could be conducted (see Reference 1).

This inspection revealed that our H-761 container would transmit loads to the warhead in the proper areas and proved that this package would provide adequate warhead protection if loads did not exceed those experienced in the 7 mph ramp test. Based on the LASL post-mortem inspection, all tests were considered satisfactory.

6. Development History

The original requirement to provide warhead case protection for this item was received in April 1959. Shortly after this, the requirement for distributing warhead loads to proper areas was received from LASL. Considering the two requirements, it appeared feasible to provide one item which could satisfy both conditions. The original concept was to provide a thin gauge steel container that would be installed on the warhead. This container would have to be easily removable so it could remain with the warhead to the final point of missile assembly without presenting an undue burden on the assembly personnel.

It was found that detonator protection could be provided without additional cost, and this was also incorporated in the design. To simplify handling, a self-contained sling, which could be used for manual handling or handling with overhead equipment, was provided.

This can consists of two basic parts: a top and bottom. The bottom portion of the container in turn has two basic parts, one being the 20 gauge steel main body and the other a 14 gauge steel floating bottom plate. The floating bottom plate has a molded rubber pad bonded to it. The shape of this pad meets the contour of the spherical surface of the warhead and has a hole in it to relieve loading in the detonator area. The body of this bottom portion has bonded to it a 3/8 inch thick by 2 inch wide rubber sleeve. The rubber sleeve will assure that all major handling loads will be distributed to the area which LASL designated. A radial bolt-type clamping arrangement is used to hold the can on the warhead.

The top half of the can is made of 20 gauge steel. It has a bolting flange which fits with a similar flange provided on the bottom segment of the can. The purpose of this top half was to ensure that the warhead would not pivot or change its position in relation to the H-761 can. It was necessary that this top half of the can be a separate item in order that it could be removed and leave the bottom half on the warhead. In the Gar-11 Missile Program, the bottom half of this container serves as a maintenance stand, the concept being that once the top half of the can is removed complete access to the warhead mounting flange is available. At this point a missile adaption ring can be placed on the warhead.

UNCLASSIFIED

[redacted]

In turn the missile insertion tool is connected to the ring. This assembly can then be moved to the area of final missile assembly with the warhead case still receiving the protection provided by the bottom half of the can. At this time, the bottom half of the container can be easily removed by loosening the two bolts which clamp it around the warhead. When this bottom half is removed the warhead is ready for its final insertion operation.

Due to the nature of this can, it was thought that the most economical means of production would be the deep-draw process. ACF was contacted during the early lay-out stages of this item in order to assure the design engineer that conditions peculiar to the deep-draw process could be incorporated. Pre-production orders were placed with ACF so that tooling could be procured for this item. The high initial tooling cost is considered justifiable since the production quantities will be large enough to distribute the cost. Four containers were also ordered on this pre-production order for prototype evaluation. These prototypes were not received on schedule so the design engineer was not afforded the opportunity to evaluate deep-draw units prior to CER. However, shop fabricated units have been tested. Extensive functional tests will be conducted upon first receival of pre-production units.

Due to the nature of the product and its function, a stress analysis was not conducted on the entire item. The base plate was designed to withstand the warhead weight and a stress analysis was conducted on this portion of the item.

References

1. Test Report - Subject: Ramp, Drop and Vibration Tests of H-651 with XW-54, - Project No. T-16399- Author: R. H. Rector, 1615-3

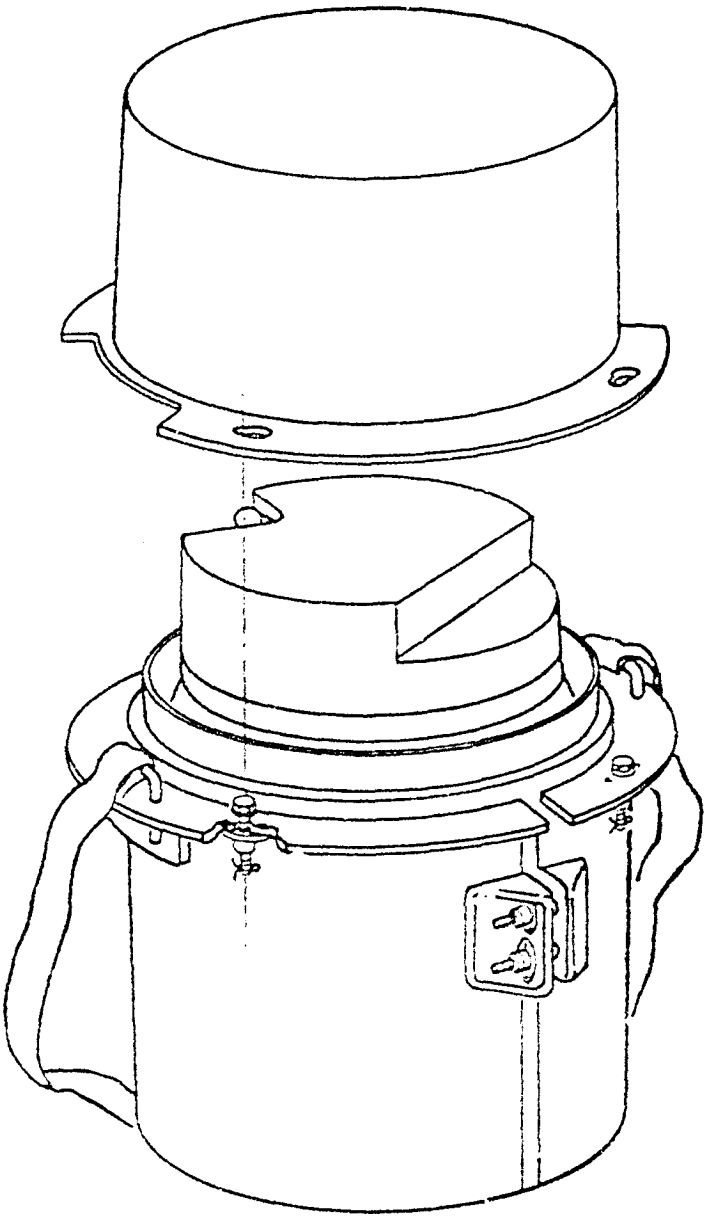

Figure 1. H-761 Warhead Protective Can

[redacted]

UNCLASSIFIED

APPENDIX A

STRESSES ON BASE PLATE ASSUMING A PLATE DIAMETER OF 12 INCHES

Formula from Formulas for Stress and Strain by Roark, Page 194, 3rd Edition

$$MS_r = S_t = -\frac{3W}{2\pi m t^2}\left[m + (m+1)\log_e \frac{a}{r_o} - (m-1)\frac{r_o^2}{4a^2}\right]$$

Where

t = thickness of plate

$W = w\pi r_o^2$ = 50 lbs (weight of unit packaged)

$m = \frac{1}{v}$ v = Poissons Ratio = .26 $\frac{1}{.26} = 3.85 = m$

a = radius of Plate

r_o = radius of load Area

w = unit applied load (lbs/sq. in.)

$$S_t = \frac{3(50)}{2\pi(3.85)t^2}\left[3.85 = 4.85\left(\log_e \frac{a}{r_o}\right) - 2.85\left(\frac{1.5^2}{4(6)^2}\right)\right]$$

$$\log_e \frac{a}{r_o} = \frac{6}{1.5} = 4$$

$$\log_e x = 2.3026 \log_{10} x$$

$$\log_{10} 4 = .60206$$

$$\log_{10} 4 = 2.3026\ (.60206) = 1.385$$

$$S = \frac{6.2}{t^2}\left[3.85 + 6.21 - .044\right]$$

$$S = \frac{6.2}{t^2}\ 10.02$$

$$S = \frac{62.1}{t^2}$$

UNCLASSIFIED

[redacted]

[redacted]

UNCLASSIFIED

$$t^2 = \frac{62.1}{S}$$

$$t^2 = \frac{62.1}{33,000} = .00188$$

$t = \sqrt{.00188} = .0434$ inch. Plate thickness required when Stress tensile yield = 's 33,000 psi (approximately for cold drawn sheet)

14 Ga. (.0747) Stock Used

UNCLASSIFIED

[redacted]