[redacted]

UNCLASSIFIED

SANDIA SYSTEMATIC DECLASSIFICATION REVIEW
DOWNGRADING OR DECLASSIFICATION STAMP
CHANGED TO: U
AUTHOR: W.C. Layne
Emilda Selph 7/9/97
PERSON CHANGING MARKING & DATE
RECORD ID: 97SN2483
Carmela Gallegos 7/22/97
PERSON VERIFYING MARKING & DATE
DATED: 7/8/97

1st Review Date: 7/7/97
Authority: EAD
Name: R.B. Carter
2nd Review Date: 7/8/97
Authority: ADD
Name: W.C. Layne
Numbers:
Unclassified

SC-DR-65-482

RESULTS OF TX-61 WEAPON TEST 100-9

(Title Unclassified)

[redacted]

RS 3410/477

INVENTORIED
MAR 1 1966
3428-3

F. W. Millikin and R. D. Lindsey, 1512
Sandia Laboratory, Albuquerque

Approved by: C. L. Carpenter
For: D. M. Olson, 1510 11/1/65

November 1965

ABSTRACT (U)

This report presents the test results of the ballistic drop of Unit 100-9. The unit appeared to be stable and functioned as indicated in the individual test request.

RECORD COPY
Do Not Take From This Room

[redacted]

[redacted]

[redacted]

[redacted]

[redacted]

UNCLASSIFIED

[redacted]

[redacted]

UNCLASSIFIED

DISTRIBUTION:

1/18A - Hq., FC/DASA, Sandia Base, Albuquerque, New Mexico,
Attn: Adj. General,
For: Major R. E. Caudle, FC/DD-3
2/18A - J. M. Wiesen, 1440
3/18A - W. J. Denison, 1512
4/18A - C. L. Carpenter, 1513
5/18A - S. A. Moore, 1540
6/18A - R. W. Devore, 2110
7/18A - A. F. Cone, 2510
8/18A - W. V. Hereford, 7215
9/18A - R. C. Maydew, 9320,
Attn: S. A. McAlees, 9325
10/18A - E. A. Paxton, 8232
11/18A - B. R. Allen, 3421
12/18A - M. G. Randle, 3428-1
13/18A - W. F. Carstens, 3410,
Attn: R. E. Dunlap, 3412
14-18/18A - R. C. Smelich, 3415-3

[redacted]

UNCLASSIFIED

[redacted]

[redacted]

UNCLASSIFIED

TABLE OF CONTENTS

	Page
Introduction	4
Test Objectives	4
Summary	4
Description of Test Vehicle	4
Instrumentation	6
Test Results	6

UNCLASSIFIED

[redacted]

RESULTS OF TX-61 WEAPON TEST 100-9

Introduction

Weapon Test 100-9 was a ballistic drop designed to check the stability of the unit with an XMC1951 spin rocket and canted fins in a 90-degree LABS delivery. A parachute was deployed before impact to attempt to recover the hardware for reuse. Table I summarizes the delivery conditions for Test 100-9.

TABLE I

Date	October 8, 1964
Carrier	F-100/745
Release altitude (ft msl)	23,600
Release speed (Mach)	0.712
Release attitude	88.5° LABS

Test Objectives

The purposes of this test were:

1. To determine trajectory.

2. To determine the stability of the unit during free fall, especially with regard to aerodynamic coupling, with spin rockets and with the fins canted 45 minutes for clockwise rotation.

Summary

The unit appeared to be stable. It had a 45-minute fin cant and one XMC1951 spin generator. It reached a roll rate of 3.6 rps at 3 seconds. A recovery parachute was deployed 58.6 seconds after release and operated satisfactorily. High Q drag data were obtained.

Description of Test Vehicle

Mechanical

Figure 1 defines the weapon assembly for Test 100-9. Additional weight was added at the forward end of the ballistic-type center case section to achieve the proper weight distribution. The telemetry package was

located in the aft end of the center case. To the rear of the telemetry package a bulkhead was pressed in to serve as a closing plate and to provide for two connector mountings between the telemetry package and the preflight section. An MC982 pullout switch was mounted at Station 32.5 on the top centerline, and a solar cell was mounted at Station 34.5 on the top centerline to monitor spin rate.

The preflight section was of the latest design and contained an XMC1951 spin rocket. The afterbody, also of the latest design, contained a standard parachute installation, an XMC1835 gas generator, and a pulse initiator. The fins were modified to provide a fin cant of 45 ± 5 minutes.

Table II summarizes the physical characteristics of Unit 100-9.

TABLE II

Length (in.)	141.0
Diameter (in.)	12.75
Weight (lb)	594.0
CG (station)	60.1
Roll MI (lb-in.^{2})	14,800
Pitch MI (lb-in.^{2})	652,600
Yaw MI (lb-in.^{2})	652,000
Dynamic unbalance (oz-in.)	Not recorded

Electrical

The electrical system for Unit 100-9 is shown in Figure 2; it included the components required to fire the spin rocket and to deploy the parachute. A special pulse initiator provided delayed ignition power to the rockets. An MC1356 escapement timer, operated through an MC982 pullout switch, provided delayed power to the XMC1835 gas generator which deployed the parachute. The MC1356 was set for 58 sec. A universal junction box interconnected the firing circuits and the telemetry. The two firing circuits were independent in the sense that the power used to fire the spin rockets came from the aircraft, while the power used to fire the gas generator for parachute deployment came from the telemetry.

Explosive Components

The following explosive components were used: (1) an XMC1951 spin rocket containing 150 mg normal lead styphanate, 2.08 gm boron potassium nitrate, and 1.8 pounds of polysulfide-ammonium-perchlorate, and (2) an XMC1835 gas generator containing 335 mg basic lead styphanate, 1.5 g boron potassium nitrate, and 110 g IMR 4350.

Instrumentation

The instrumentation for Test 100-9 was the same as that for Test 100-10, described in SC-DR-64-1654, Test Plan for the TX-61 Weapon Test 100-10. Data was obtained successfully on longitudinal acceleration; roll, pitch, and yaw; spin rate (solar cell and radial g-switch), two fire signals, arm power, and parachute deployment.

Test Results

The unit was released in a 88.5° LABS maneuver, and the spin rocket fired at 0.028 second after release. The roll rate reached 4 rps within 1 second after release, slowly decreased to 1.8 rps at apogee, and then slowed to 1.4 rps shortly after apogee. By the time of parachute deployment the roll rate had increased to 3.3 rps. The peak longitudinal acceleration during parachute deployment was approximately 60 g.

A summary of trajectory data for this test is shown in Table III. Graphs of trajectory, speed, dynamic pressure, and roll rate for the unit are shown in Figures 3 through 9.

TABLE III

Trajectory Data on Test 100-9

Release altitude (ft msl)	23,600
Release attitude	88.5°
Release speed (Mach)	0.712
Ejection velocity (fps)	None
Time of chute deployment (sec)	58.6
Velocity at chute deployment (fps)	1,050
Q at chute deployment (lb/ft^2)	850
Time of fall (sec)	128.3
Range (ft)	2,336
Trajectory length (ft)	35,268
Roll rate at 3 seconds (rps)	3.6
Maximum roll rate (rps)	4.0

TABLE III (contd)

Roll rate at chute deployment (rps)	3.3
Time of spin rocket fire (sec after release)	0.028

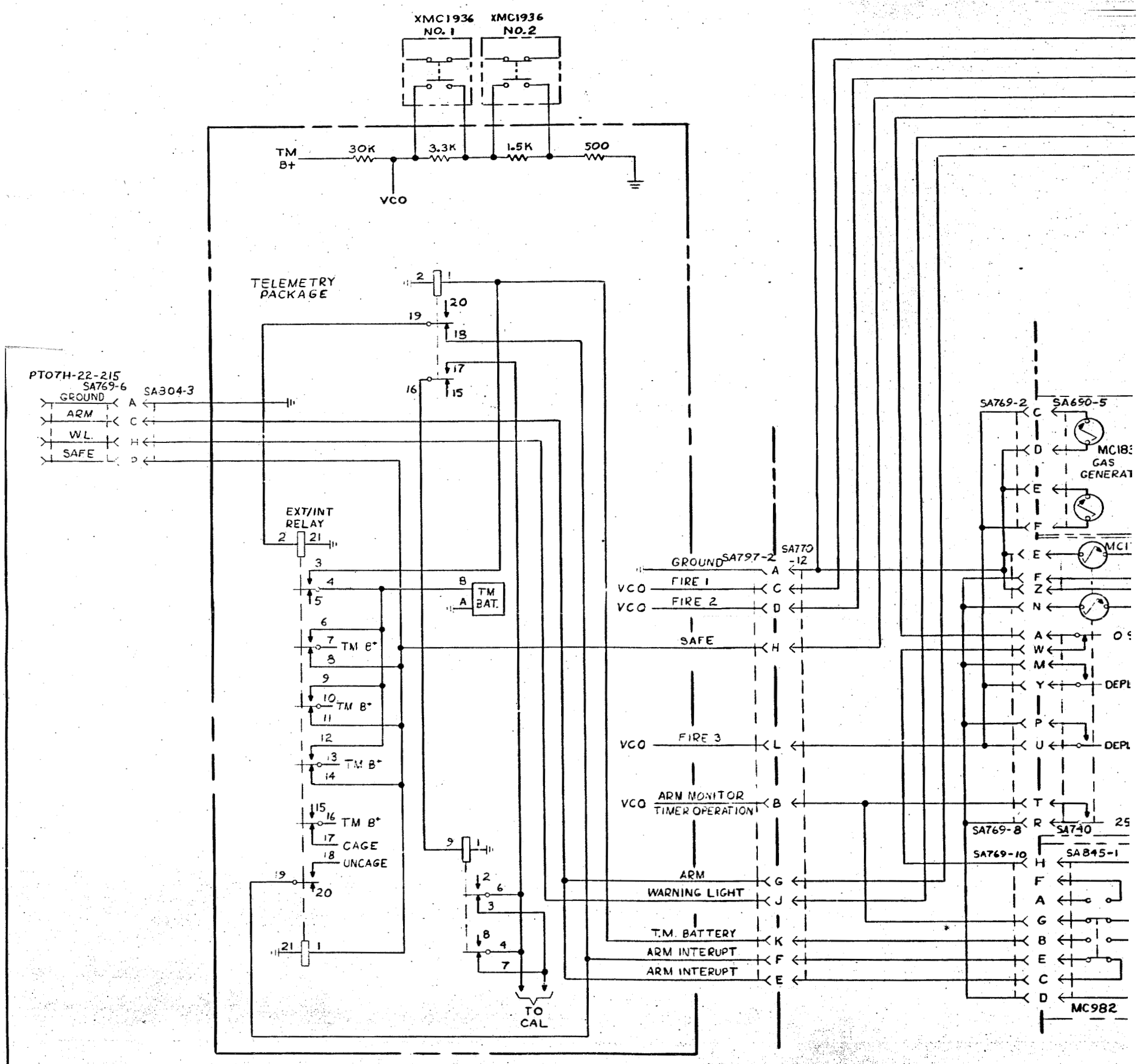
XMC1936 NO. 1
XMC1936 NO. 2
TM B+
30K
3.3K
1.5K
500
VCO
TELEMETRY PACKAGE
PT07H-22-215
SA769-6
SA304-3
GROUND
ARM
W.L.
SAFE
EXT/INT RELAY
TM BAT.
TM B+
CAGE
UNCAGE
TO CAL
GROUND
SA797-2
SA770-12
FIRE 1
FIRE 2
SAFE
FIRE 3
ARM MONITOR TIMER OPERATION
ARM WARNING LIGHT
T.M. BATTERY
ARM INTERUPT
SA769-2
SA690-5
MC183
GAS GENERAT
SA769-8
SA740
SA769-10
SA845-1
MC982

REVISION			
ISS	SHEET / ZONE	DESCRIPTION	
1		ROMERO, J	

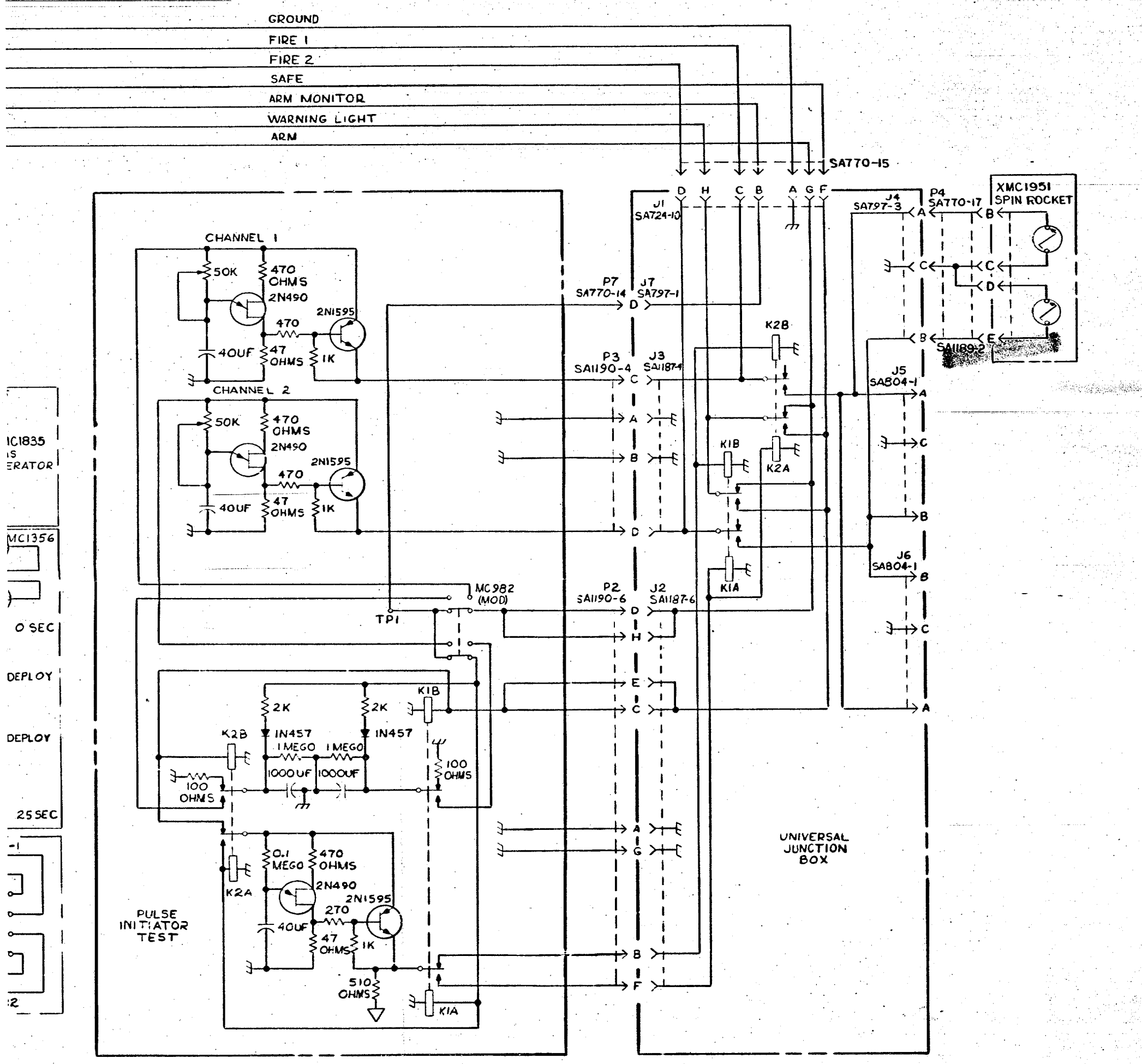

UNCLASSIF

DWG. CLASSIFICATION LEVEL	PART CLASSIFICATION	SHEET / ISSUE
UNCLASSIFIED		SHEET INDEX
CLASSIFICATION CATEGORY	ORG / DATE / INITIALS	TITLE: SCHEMATIC, 100-10
	MFG AGENCY APPROVALS	MFG AGENCY NO.

W059091

REVISIONS					
ISS	SHEET / ZONE	DESCRIPTION PREPARED BY	DATE	CHKR	ENGR
1		ROMERO, J 4413-4	8/1/64		

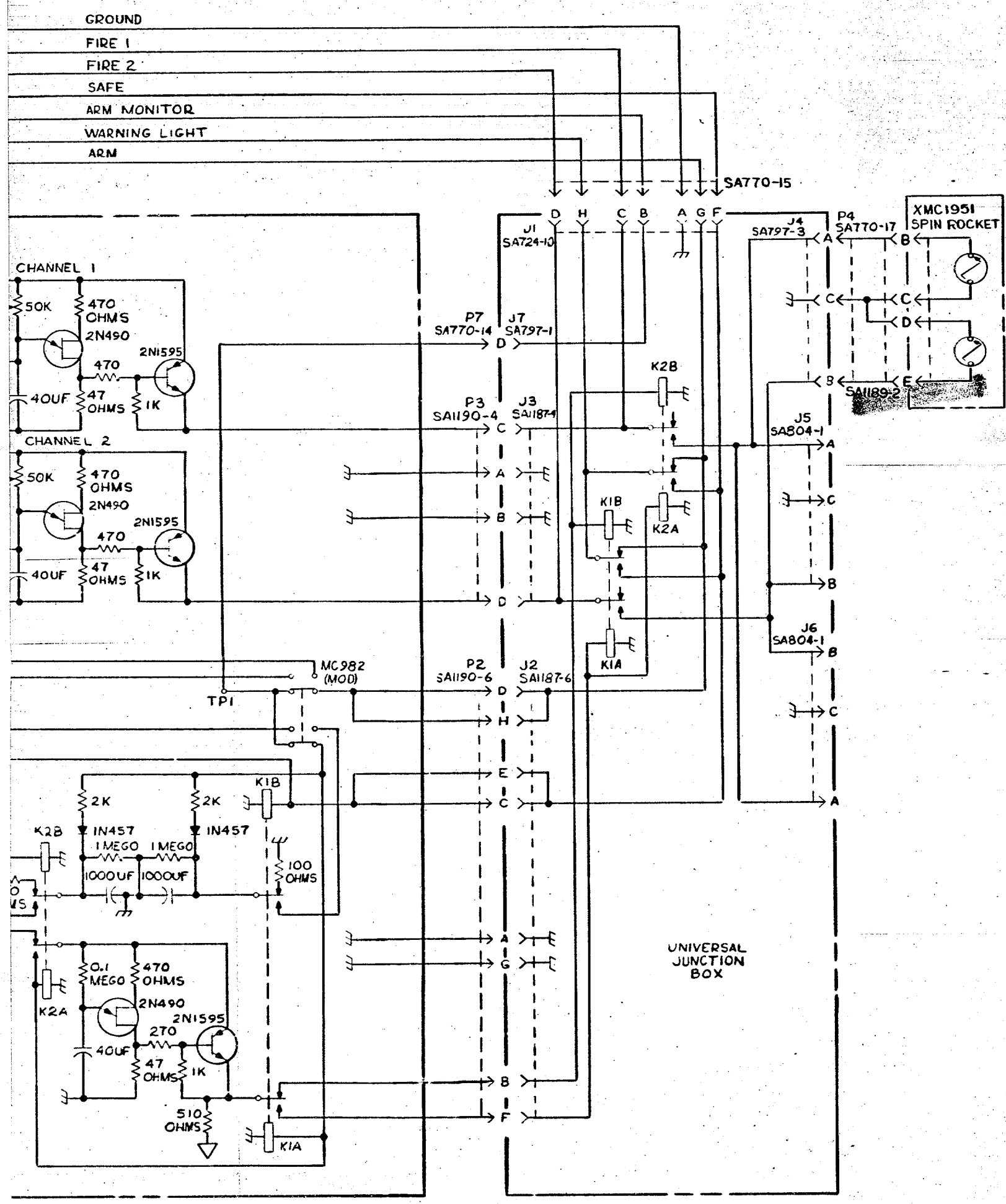

UNCLASSIFIED

DWG. CLASSIFICATION LEVEL: UNCLASSIFIED	PART CLASSIFICATION	SHEET 1 / ISSUE 1 — SHEET INDEX	
CLASSIFICATION CATEGORY	ORG / DATE / INITIALS	TITLE: SCHEMATIC, 100-10	FIRST APPLICATION
	MFG AGENCY APPROVALS	MFG AGENCY NO.	SIZE E / DWG NO. CKN79752

CKN79752

NOTES

1. MATERIAL FOR ITEM 26 TO BE STEEL PLATE, HIGH STRENGTH, LOW ALLOY (4130) PER MIL-S-18729, COND H, OR EQUIVALENT STEEL,. YIELD STRENGTH 60,000 P.S.I.
2. ITEM 46(FIN) IS CANTED 45° FROM LONGITUDINAL CENTER LINE AS MODIFIED PER 060406.
3. FOR ELECTRICAL SCHEMATIC OF "100-9". SEE DRAWING NO. CKN 78752.

REVISIONS

ISSUE	SHEET ZONE	DESCRIPTION	PREPARED BY	DATE	CHKR	ENGR
1			Z T DAVIS 4412-5 (E)	10-5-64		

NO REQD	NO REQD	NO REQD	NO REQD	DESIGN AGENCY NUMBER	DESCRIPTION	NOTE	SHEET ZONE	ITEM
			4	MS35192-27	SCREW, MACH. 82° CSK HD. (6-32 x 1/2 LG)			61
			1	192169-00	DOOR, ACCESS			60
			1	311932-00	MC1951			59
			1	311816-00	MC1874			58
			4	192165-00	INSULATOR, THERMAL (ISS 2)			57
			4	MS20392-7C-57	PIN, FLAT HEAD			56
			4	MS35455-17	SCREW, MACH, SOC HD,			55
			1	192125-00	DEPLOYMENT PLATE (MACHINED)(ISS 2)			54
			1	186753-00	CAP AND BOLT, REAR (ISS 3)			53
			1	180370-00	CASE EXTENSION, REAR (ISS 6)			52
			1	180363-00	TUBE-PLUG ASSY (ISS 2)			51
			8	180364-00	PIN, SHEAR (ISS 1)			50
			32	NAS1216-4-8	SCREW, PAN HD, HI-TORQUE			49
			4	180397-00	COVER AND SCREW AFT (ISS 2)			48
			4	180396-00	COVER AND SCREW FWD (ISS 2)			47
			4	186730-00	FIN (ISS 3)	3		46
			1	(AF)	PARACHUTE (16 FT)			45
			18	MS16997-37	SCREW, CAP, SOCKET HD.			44
			6	MS24665-285	PIN, COTTER			43
			6	180380-00	ROLLER			42
			6	MS20392-7C-67	PIN, FLAT HEAD			41
			6	192174-00	INSULATOR, THERMAL (ISS 1)			40
			4	AN509-10R5	SCREW, MACH, 100°CSK HD, 10-32 X 11/32 LG.			39
			4	MS35193-58	SCREW, MACH, 82° CSK HD, 10-32 X 7/8 LG.			38
			1	M65384	MOUNTING PLATE			37
			1	188923-00	CABLE ASSY (P/O)(ISS 2)			36
			1	M60445	PULSE INITIATOR (TEST) #3(ISS 1)			35
			1	180391-00	CASE SECTION, REAR (ISS 11)			34
			1		CUTTER MECHANISM (MODIFIED)			33
			1	180361-00	TUBE, ALUM, INSIDE (ISS 2)			32
			1	311784-00	XMC 1835(GAS GENERATOR)			31
			1	180372-00	SUPPORT, SHROUD LINE (ISS 9)			30
			1	199030-00	CASE SECTION, PREFLIGHT (ISS 2)			29
			72	194092-00	SCREW, MACHINE			28
			1	199629-00	LUG, SUSPENSION (ISS 2)			27
			8	AN507-1032R16	SCREW, MACH, 100° CSK HD, 10-32 X 1 LG.			26
			7	MS35456-11	SCREW, MACH, SOC HD, 10-32 X 1/2 LG.			25
			1	311164-02	MC 1356 (TIMER)			24
			1	M65327	MOUNT, TIMER (BTS)(ISS 1)			23
			6	MS35456-13	SCREW, MACH, SOC HD, 10-32 X 3/4 LG.			22
			1	M54857	JUNCTION BOX, UNIV (BTS)(ISS 2)			21
			1	M65310	MOUNT, JUNCTION BOX (BTS)(ISS 1)			20
			1	M65313	CENTER CASE BULKHEAD (BTS)(ISS 3)			19
			1	M51444	TM PACKAGE			18
			4	AN509-616R18	SCREW,MACH, 100°CSK HD, 3/8-24 X 1 7/32 LG.			17
			4	NAS1081-6D8N	SETSCREW, SELF-LOCK,CUP PT, 3/8-24 X 1/2LG.			16
			1		SOLAR CELL			15
			1		GUIDE PLATE	1		14
			4	MS35210-17	SCREW,PAN HD, 10-32 X 5/8 LG.			13
			1	M65307	MOUNT, PULL OUT (BTS)(ISS 3)			12
			1	310712-00	MC982			11
			1	M60447	CENTER CASE WEIGHT (BTS)(ISS 1)			10
			12	MS35456-25	SCREW, CAP, SOC HD, 1/4-28 X 1 LG.			9
			12	MS35338-25	WASHER, LOCK, SPLIT, 1/4			8
			16	194079-00	SCREW, MACHINE			7
			1	194059-00	LUG, SUSPENSION (ISS 2)			6
			36	194091-00	SCREW, MACHINE			5
			1	MS54835	CENTER CASE, FREE FALL (BTS)(ISS 5)			4
			1		ANTENNA (FOR TM)			3
			1	194025-00	CASE EXTENSION, CENTER (ISS 2)			2
			1	194024-00	NOSE, ALTERNATE (ISS 2)			1

X DENOTES DOCUMENTS
AN DENOTES AS REQD

LIST OF MATERIAL

DR. NO. N79512
ISS. 1 SHT. 1
FR. 1 OF 3
CLASS UNC.

[redacted]

SHEET	1
ISSUE	1

SHEET INDEX

CLASSIFICATION CATEGORY

DESIGN AGENCY APPROVALS

ORG	DATE	INITIALS
1513		
4412		

MFG AGENCY APPROVALS

TITLE
TX-61
FREE FALL (BTS)
100-9

MFG AGENCY NUMBER

DWG CLASSIFICATION LEVEL
UNCLASSIFIED

PART CLASSIFICATION
UNCLASSIFIED

SIZE J
DWG NUMBER N79512
SCALE 1/2
SHEET 1 OF 1

UNCLASSIFIED

[redacted]

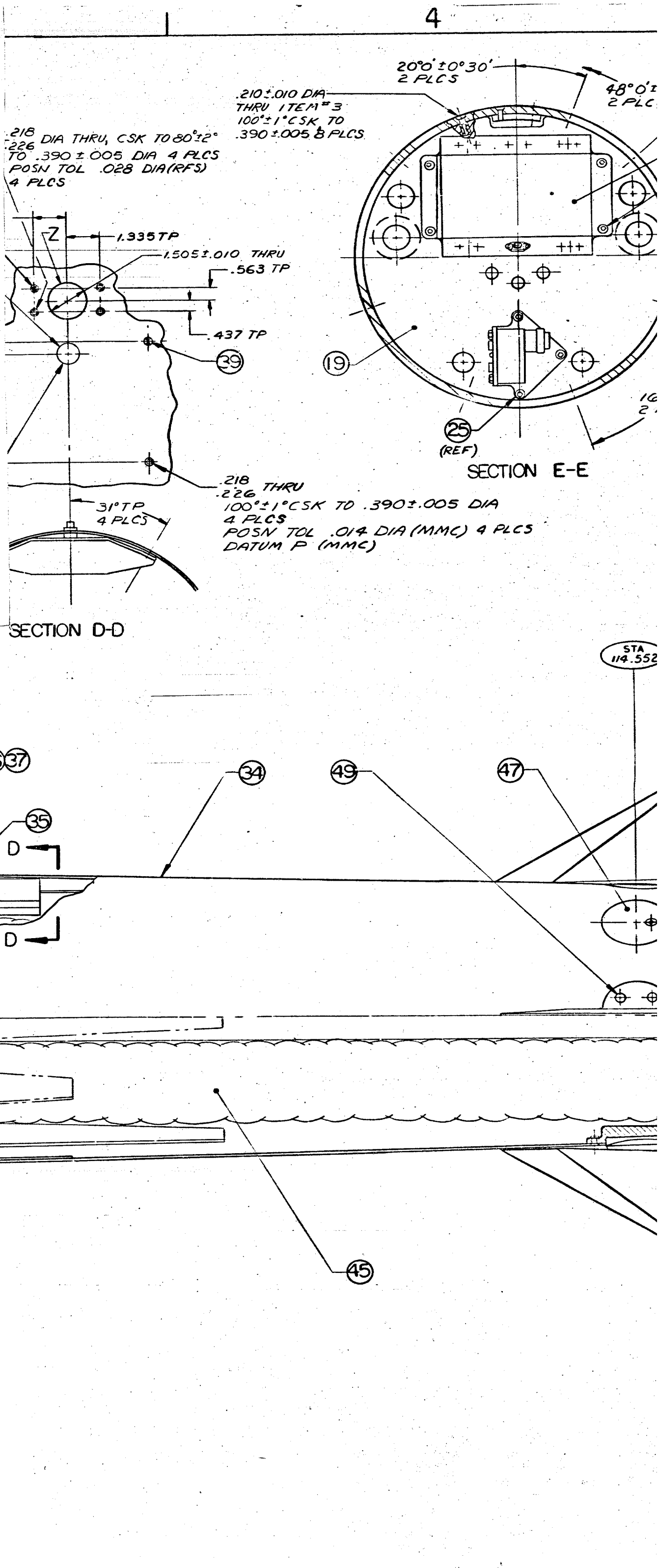

UNCLASSIFIED

[redacted]

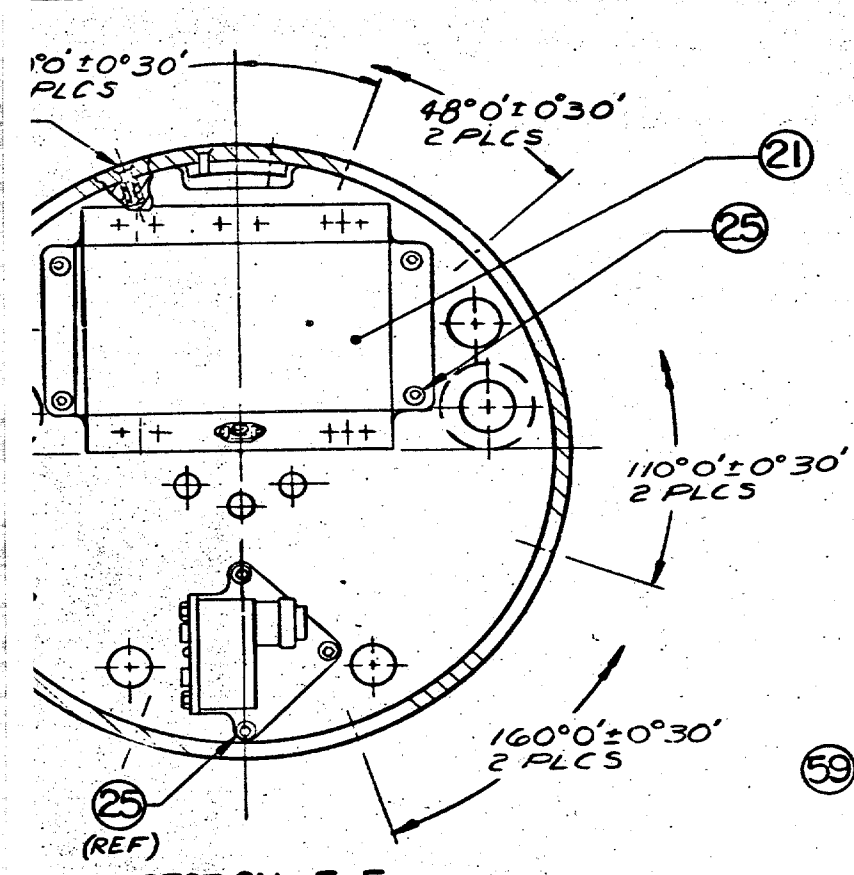

SECTION E-E

.005 DIA
(MMC) 4 PLCS

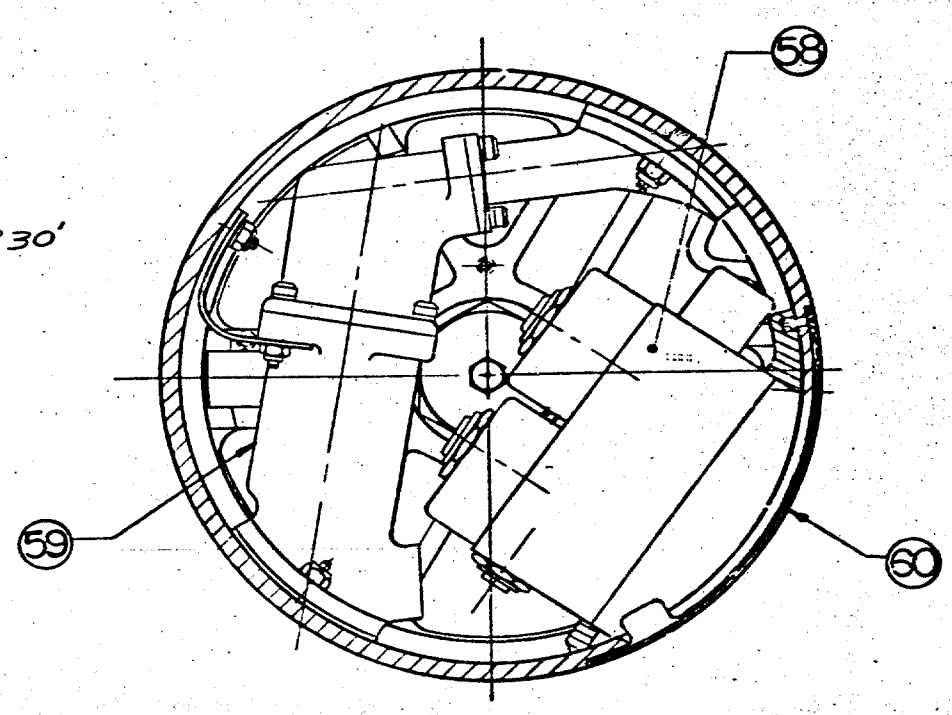

SECTION F-F

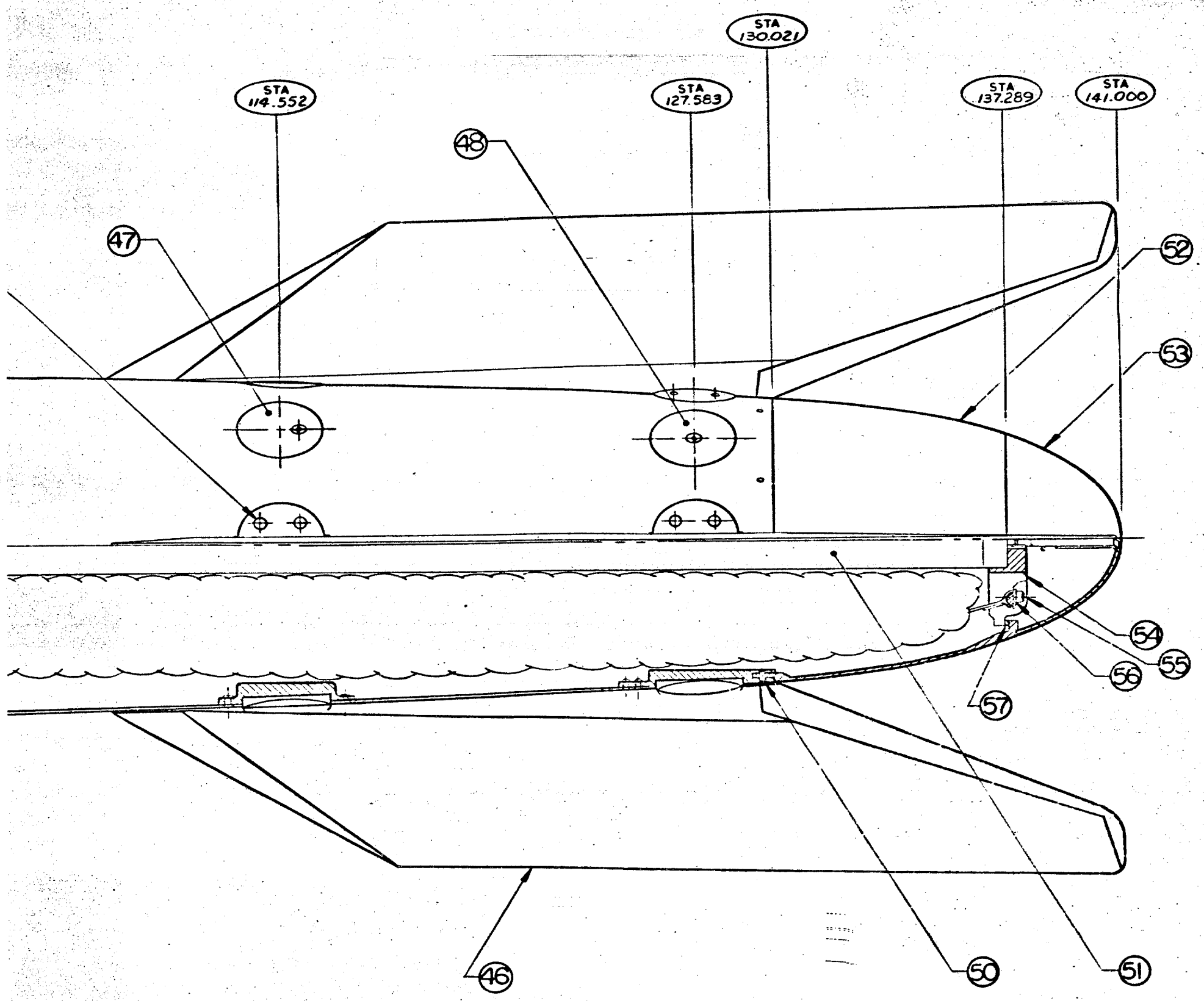

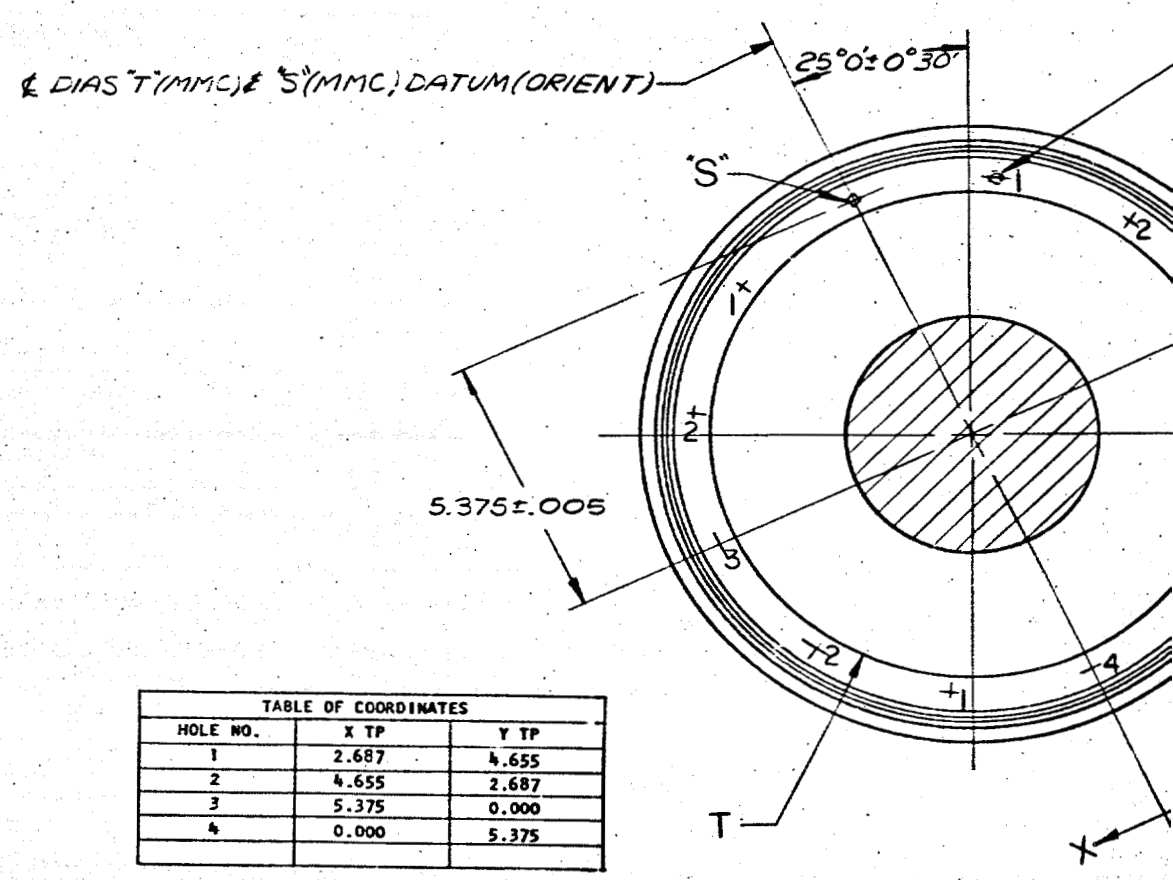

TABLE OF COORDINATES		
HOLE NO.	X TP	Y TP
1	2.687	4.655
2	4.655	2.687
3	5.375	0.000
4	0.000	5.375

SECTION A-A

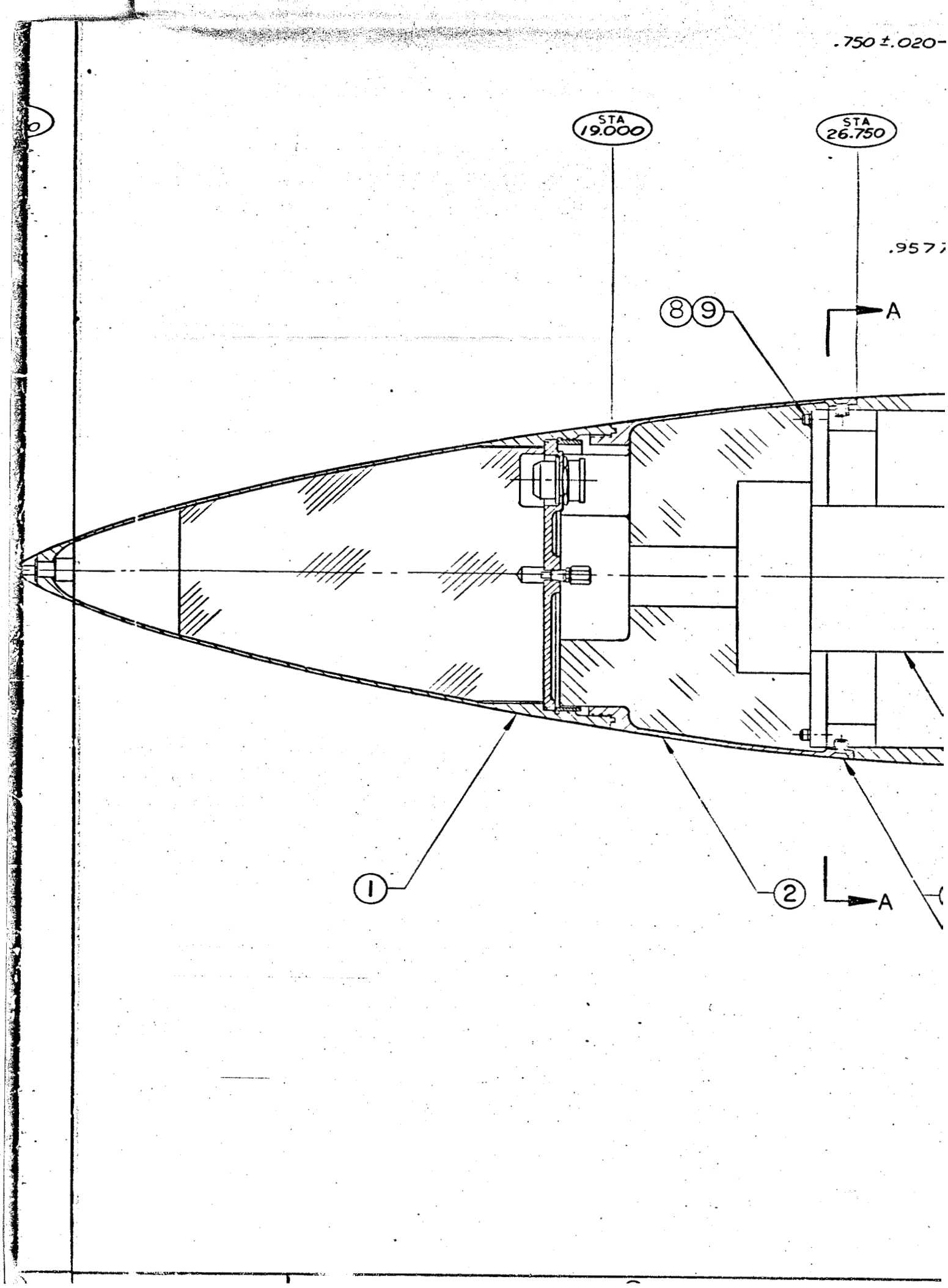

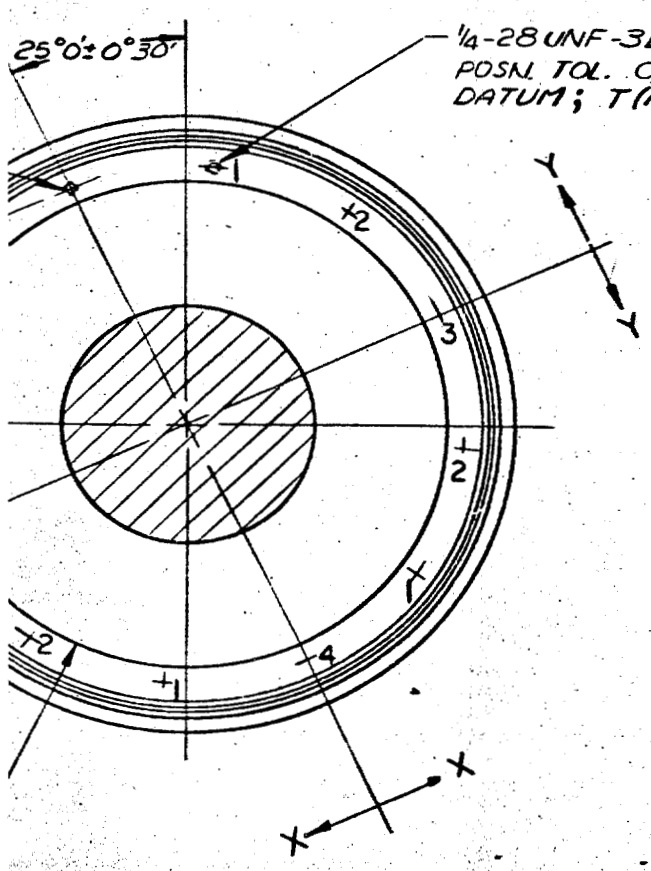

SECTION A-A

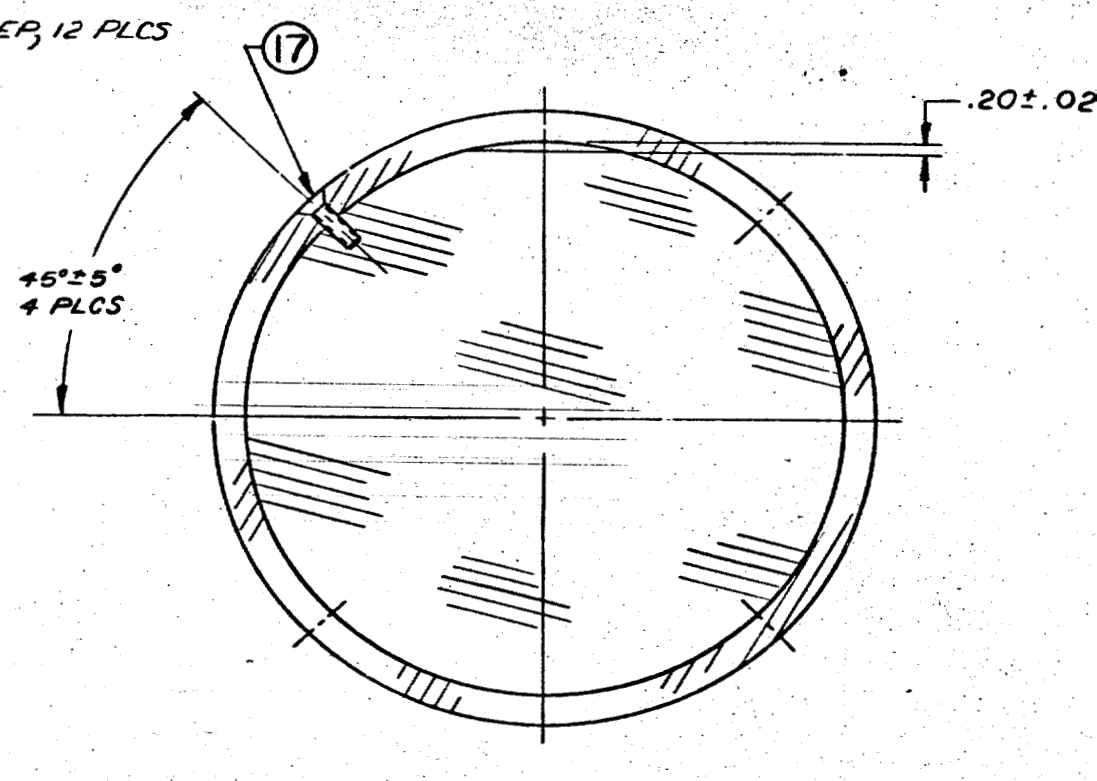

SECTION B-B

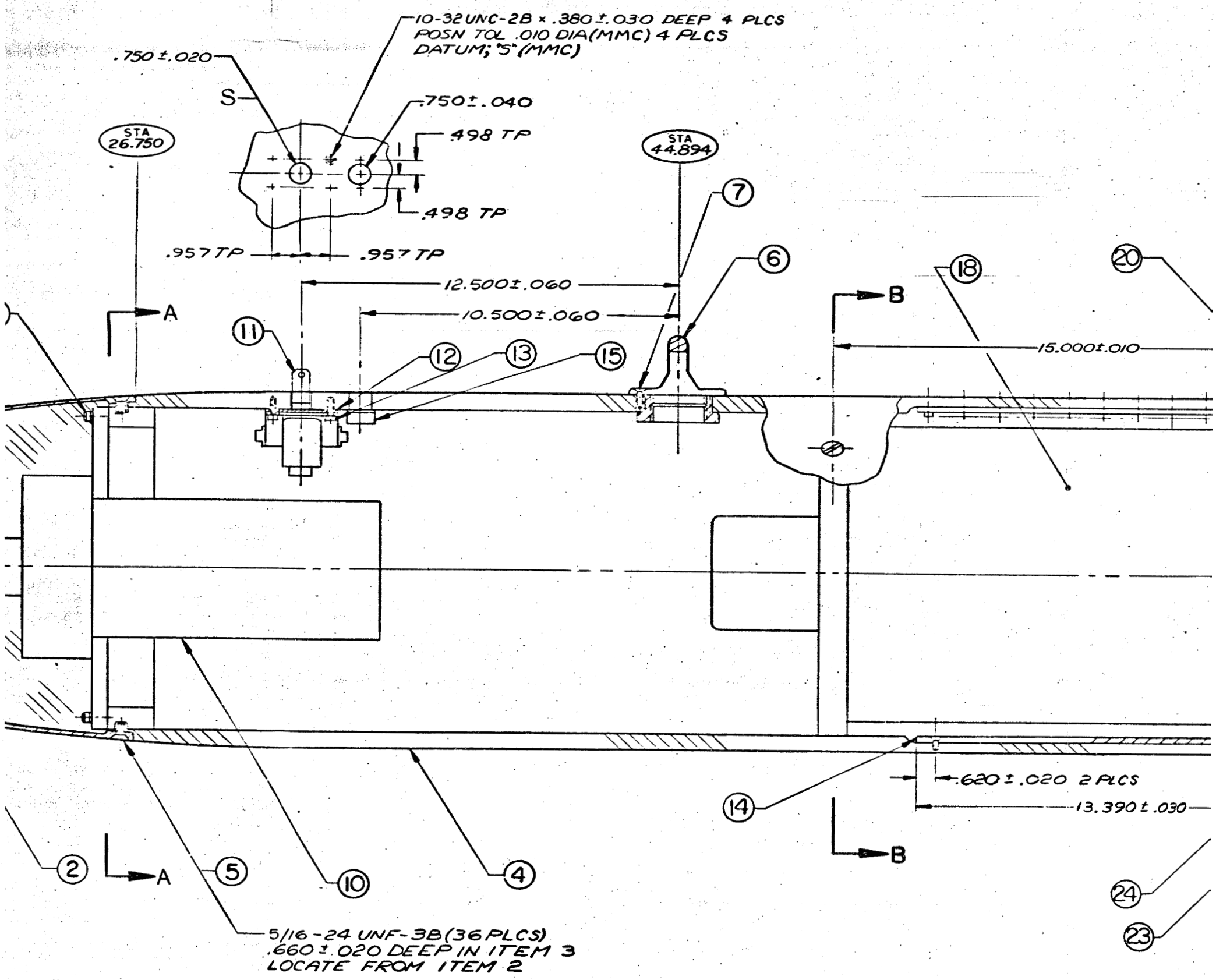

DR. NO. N79512
ISS. 1 SHT. 1
FR. 2 OF 3
CLASS UNC.

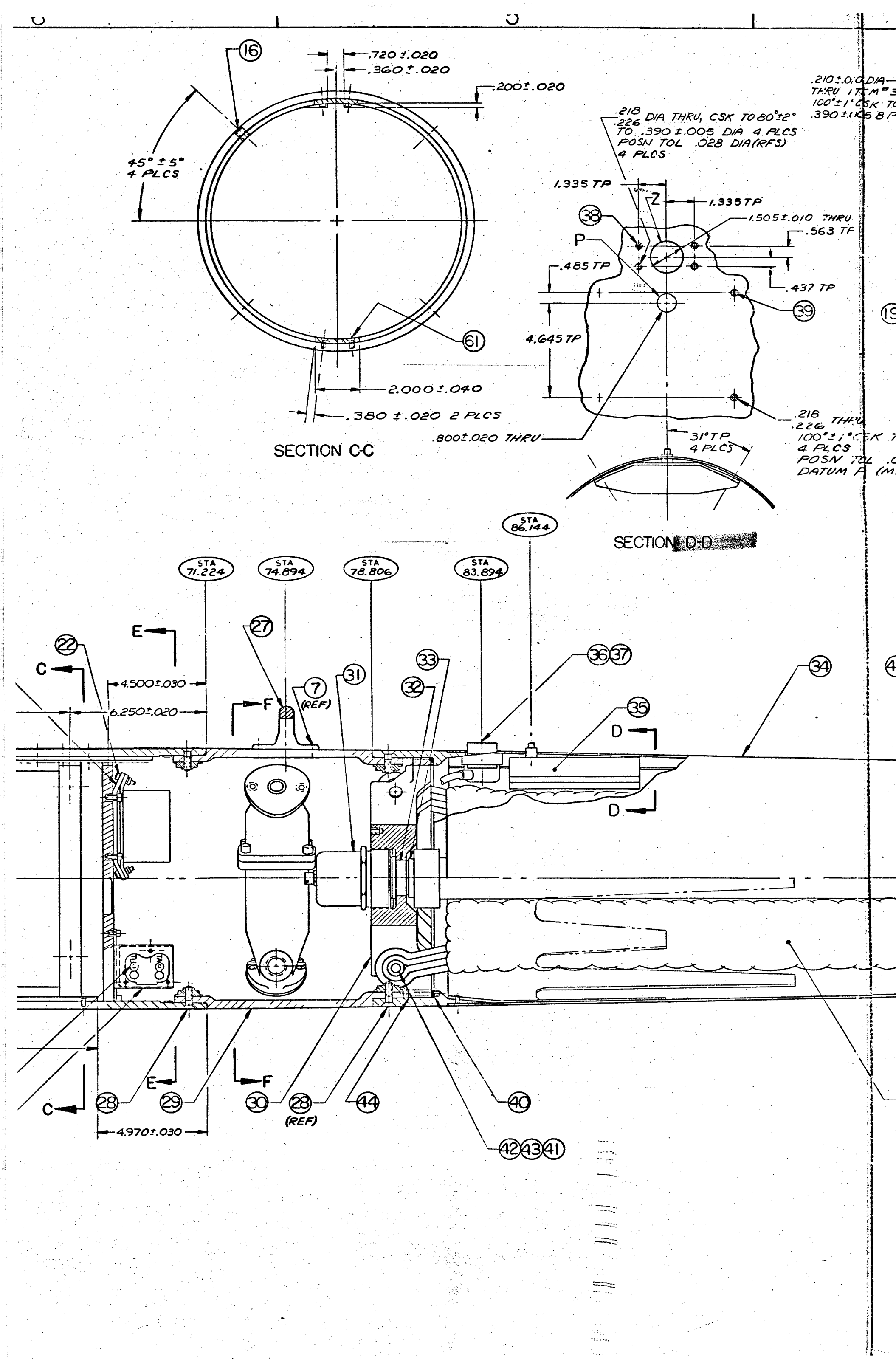
16
.720 ±.020
.360 ±.020
.200 ±.020
45° ±5°
4 PLCS
61
2.000 ±.040
.380 ±.020 2 PLCS
SECTION C-C
.218
.226 DIA THRU, CSK TO 80°±2°
TO .390 ±.005 DIA 4 PLCS
POSN TOL .028 DIA(RFS)
4 PLCS
1.335 TP
Z
1.335 TP
38
1.505 ±.010 THRU
.563 TP
P
.485 TP
.437 TP
39
4.645 TP
.218
.226 THRU
100° ±1° CSK
4 PLCS
POSN TOL
DATUM A (M
.800 ±.020 THRU
31° TP
4 PLCS
SECTION D-D
STA 86.144
STA 71.224
STA 74.894
STA 78.806
STA 83.894
E
27
22
C
4.500 ±.030
6.250 ±.020
F
7
(REF)
31
33
32
36
37
34
35
D
D
E
F
C
28
29
30
28
(REF)
44
40
4.970 ±.030
42
43
41

℄ DIAS "T"(MMC)℄ "S"(MMC) DATUM(ORIENT)-

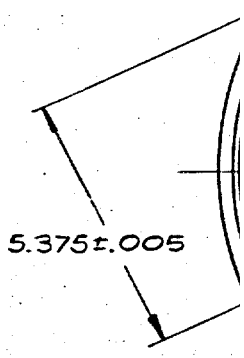

TABLE OF COORDINATES		
HOLE NO.	X TP	Y TP
1	2.687	4.655
2	4.655	2.687
3	5.375	0.000
4	0.000	5.375

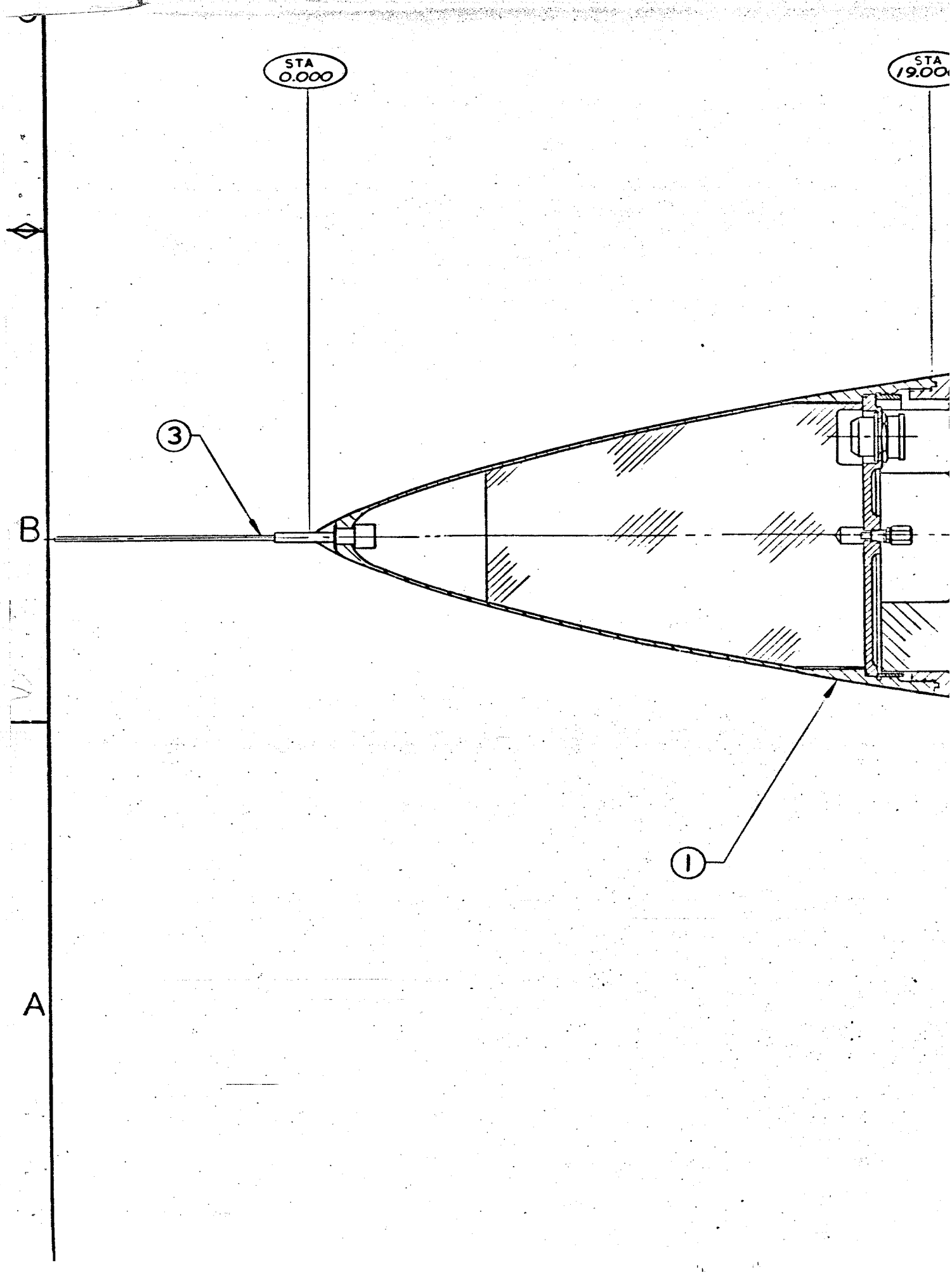

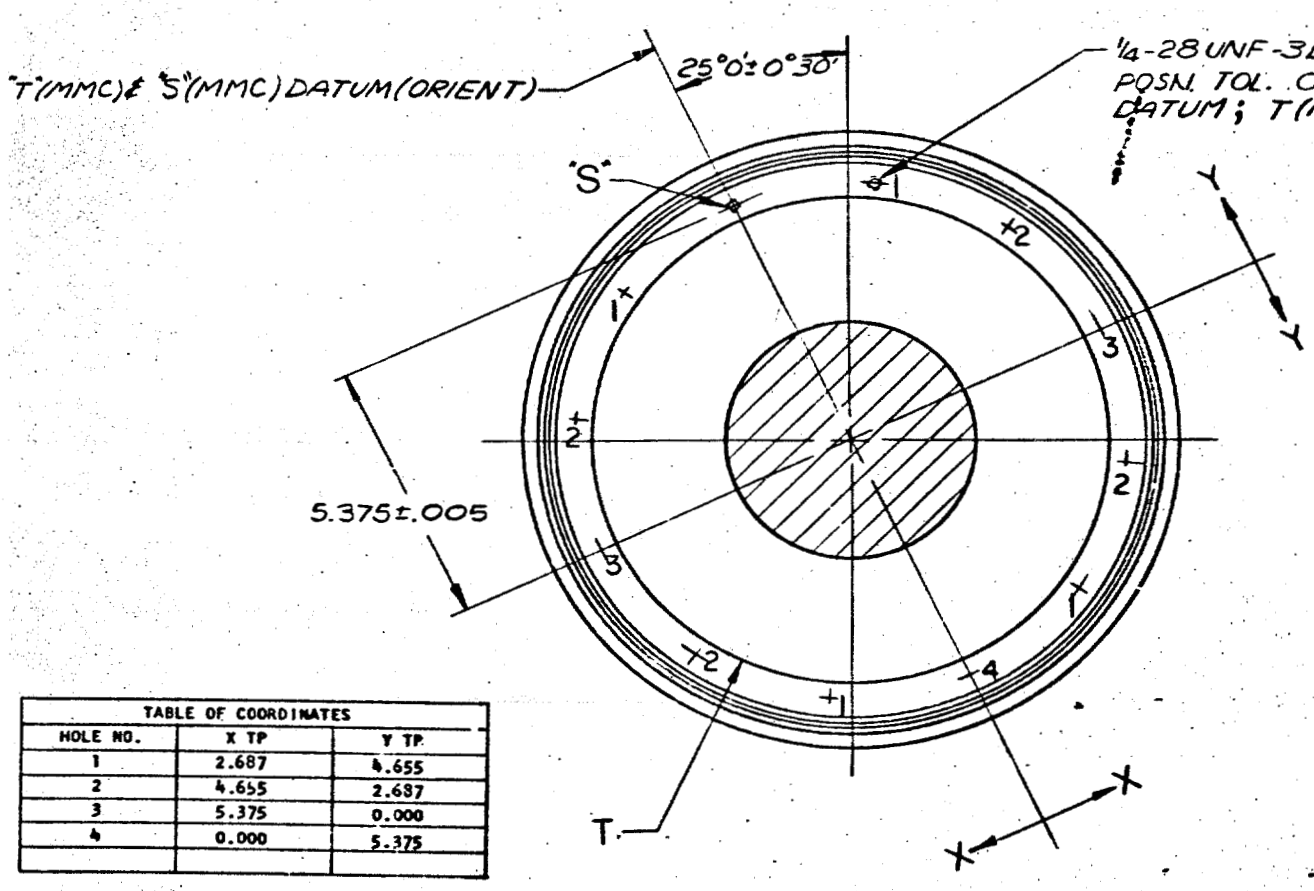

TABLE OF COORDINATES		
HOLE NO.	X TP	Y TP
1	2.687	4.655
2	4.655	2.687
3	5.375	0.000
4	0.000	5.375

SECTION A-A

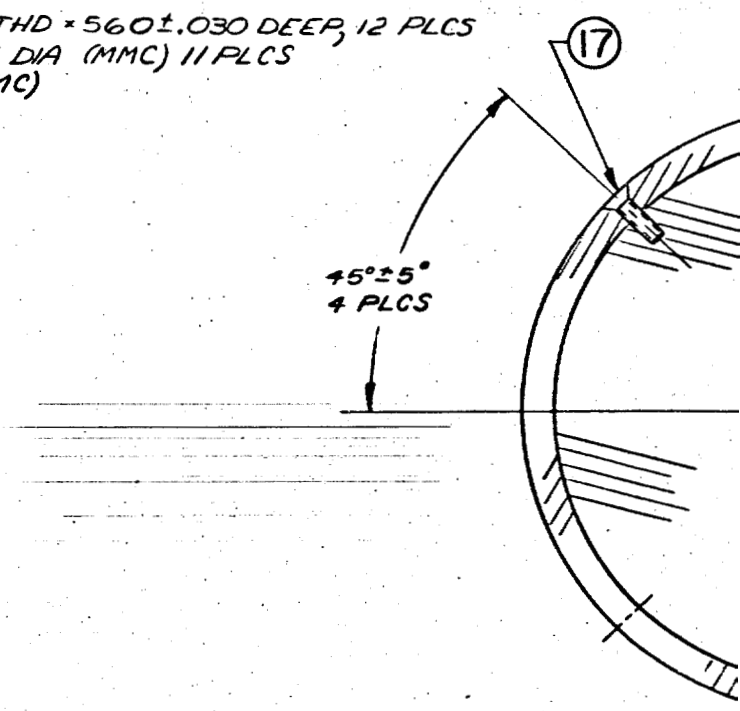

SEC

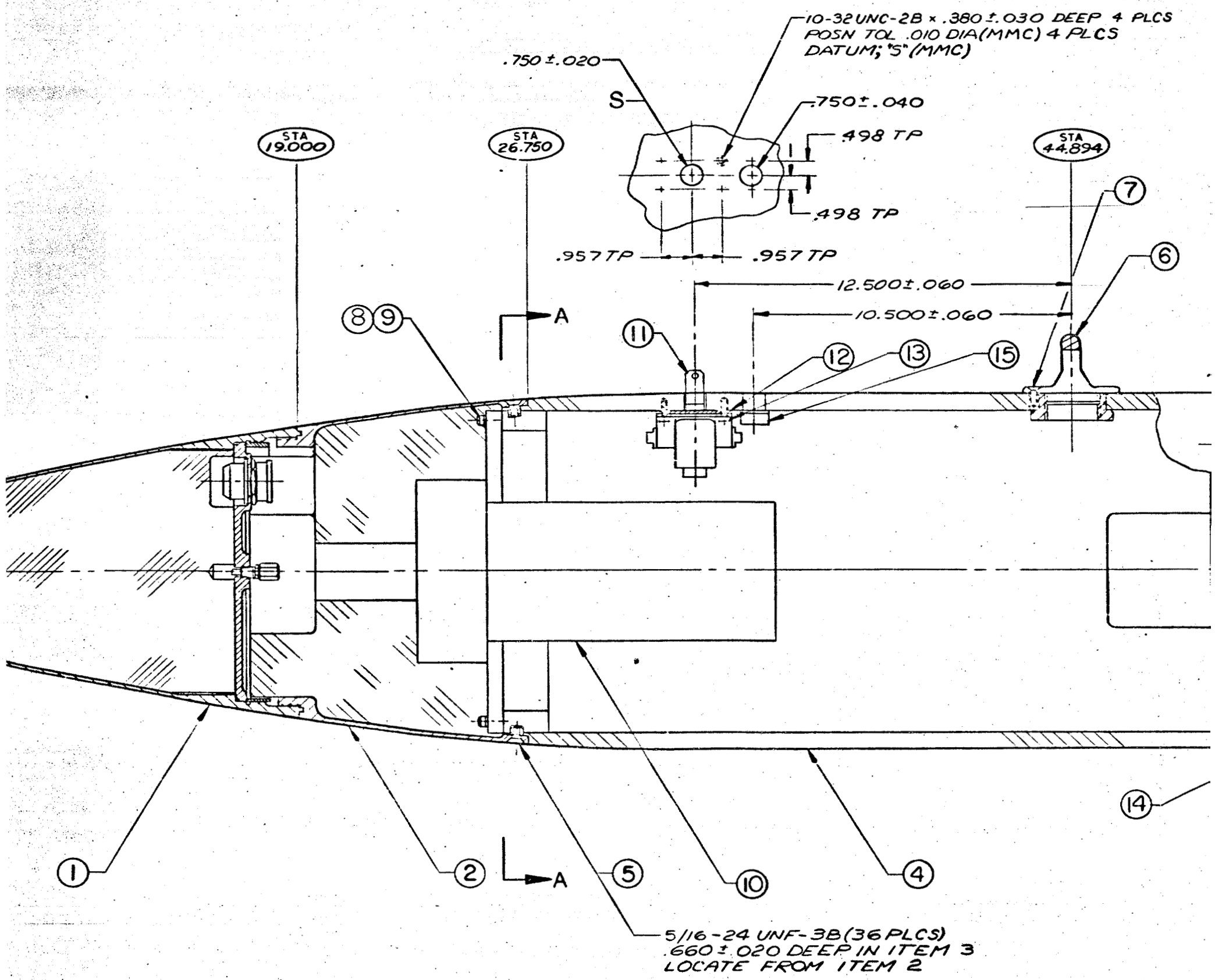

DR. NO. N79512
ISS. 1 SHT. 1
FR. 3 OF 3
CLASS UNC.

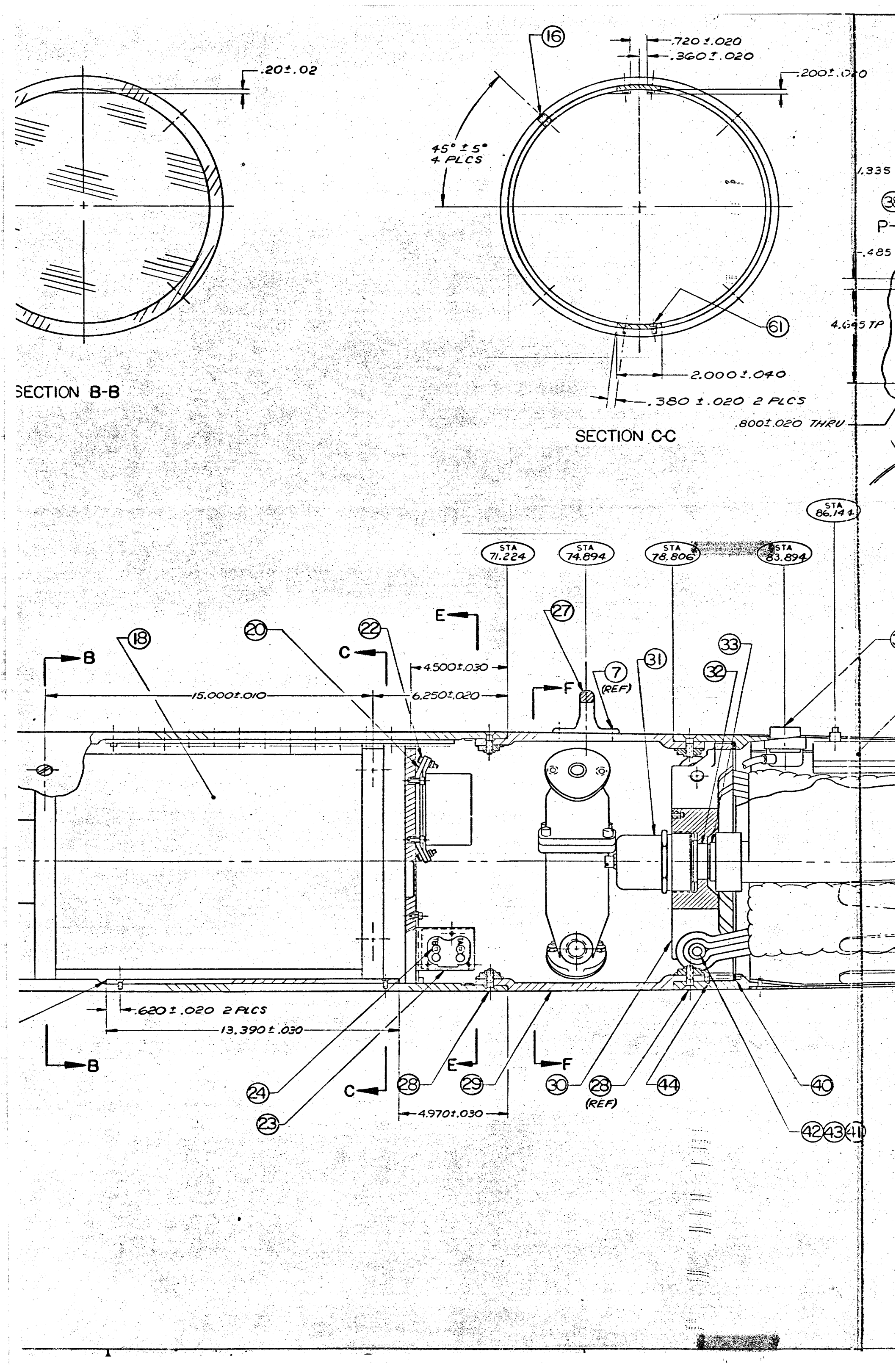
.20±.02
SECTION B-B
16
.720±.020
.360±.020
.200±.020
45° ±5°
4 PLCS
61
2.000±.040
.380 ±.020 2 PLCS
.800±.020 THRU
SECTION C-C
1.335
4.645 TP
.485
STA 86.144
STA 71.224
STA 74.894
STA 78.806
STA 83.894
E
27
18
20
22
B
C
4.500±.030
15.000±.010
6.250±.020
F
7
(REF)
31
33
32
.620±.020 2 PLCS
13.390±.030
B
24
23
C
28
29
E
F
30
28
(REF)
44
40
4.970±.030
42
43
41

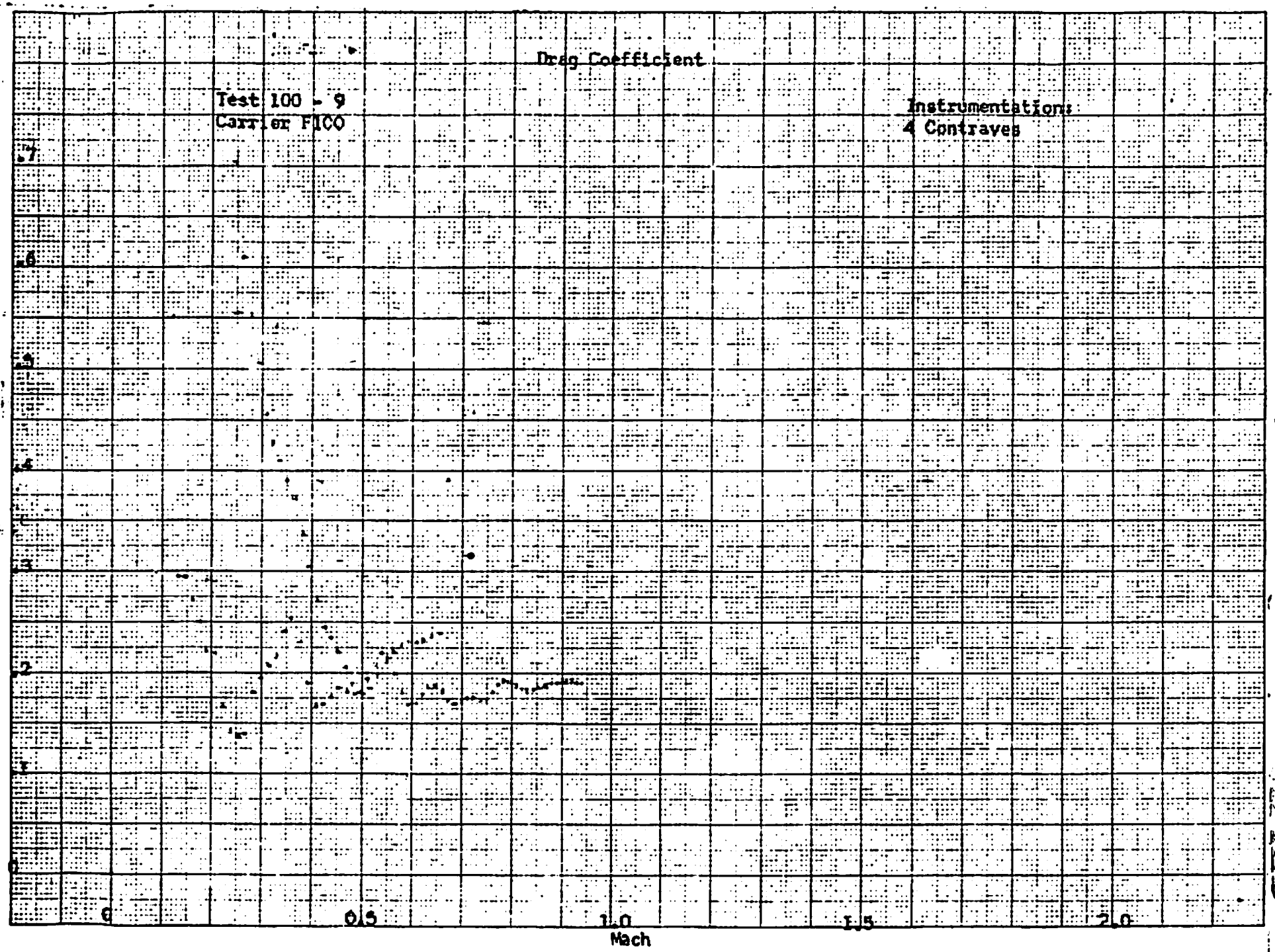

Figure 3.

UNCLASSIFIED

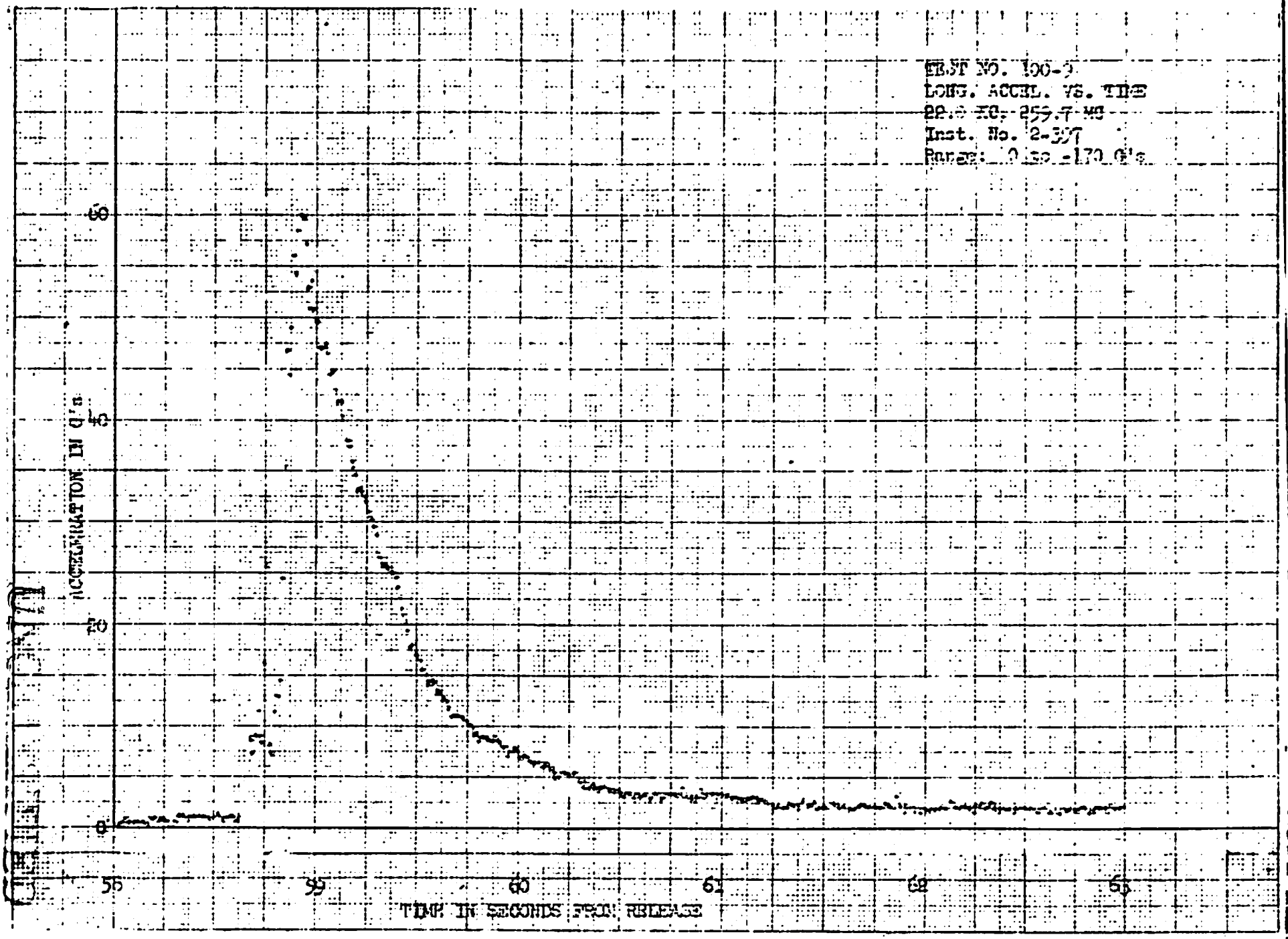
TEST NO. 100-9
LONG. ACCEL. VS. TIME
Inst. No. 2-397
ACCELERATION IN G's
0
20
40
60
55
59
60
61
62
63
TIME IN SECONDS FROM RELEASE

Figure 7.

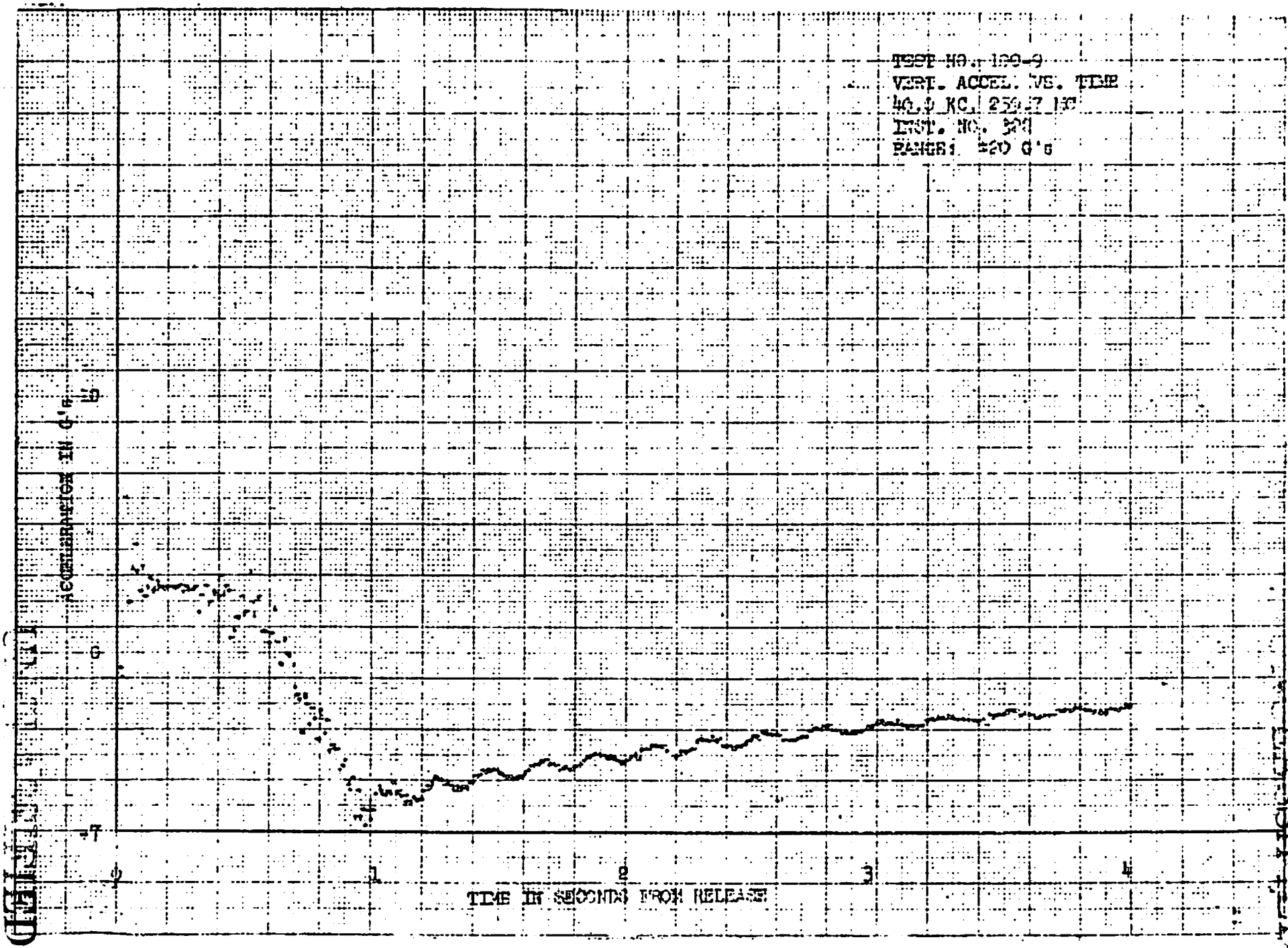
TEST NO. 109-9
VERT. ACCEL. VS. TIME
40.0 KC, 250.7 HC
INST. NO. 321
RANGE: ±20 G'S
ACCELERATION IN G'S
TIME IN SECONDS FROM RELEASE
0
1
2
3
4

Figure 8.