[redacted]

SANDIA SYSTEMATIC DECLASSIFICATION REVIEW
DOWNGRADING OR DECLASSIFICATION STAMP
CHANGED TO: U | AUTHORITY: R. B. Craner
Emelda Selpt 7/31/97 | RECORD ID: 97SN3182
Carmela Gallegos 8/12/97 | DATED: 7/31/97

SANDIA SYSTEMATIC DECLASSIFICATION REVIEW
1st Review Date: 7/29/97
Authority: ADC ADD
Name: R B Craner
2nd Review Date: 7/31/97
Authority: ADD
Name: W. C. Loyer
Determination (Circle Numbers):
1. Classification Retained
2. Classification Changed to: UNCL
3. Contains No DOE Classified Information
4. Coordinate With:
5. Contains UCAI?
6. Comments: OK for OpenNet

SC-DR-65-538

RESULTS OF TX-61 WEAPON TESTS 212-1 AND 212-2

(Title Unclassified)

[redacted]

RS 3410/487

INVENTORIED
MAR 1 1966
3428-3

F. W. Millikin and B. C. Caskey, 1512
Sandia Laboratory, Albuquerque

Approved by: D. M. Olson, 1510 12-22-5

January 1966

ABSTRACT (U)

This report supplements SC-DR-64-1721, "Test Plan for TX-61 Weapon Tests 212-1 and 212-2." It gives results on two high-speed sled tests for the TX-61 weapon program.

[redacted]

~~This document contains restricted data as defined in the Atomic Energy Act of 1954. Its transmittal or the disclosure of its contents in any manner to an unauthorized person is prohibited.~~

[redacted] OF 20 COPIES, [redacted]

[redacted] Excluded from automatic downgrading and declassification

¢¢¢

UNCLASSIFIED

[redacted]

[redacted]

UNCLASSIFIED

DISTRIBUTION:

1/20A - Hq. FC/DASA, Sandia Base,
Attn: Adj. Gen., For: Maj. R. E. Caudle, FC/DD-3
2-3/20A - M. R. Madsen, 1512
4/20A - C. L. Carpenter, 1513
5/20A - S. A. Moore, 1540
6/20A - R. W. DeVore, 2110
7/20A - J. M. Wiesen, 2150
8/20A - A. F. Cone, 2510
9/20A - R. N. Browne, 7214
10/20A - W. V. Hereford, 7215
11/20A - H. S. North, 7216
12/20A - R. C. Maydew, 9320,
Attn: W. R. Barton, 9324
13/20A - E. A. Paxton, 8232
14/20A - B. R. Allen, 3421
15/20A - M. G. Randle, 3428-1
16/20A - W. F. Carstens, 3410,
Attn: J. Shunny, 3412
17-20/20A - R. C. Smelich, 3415-3

[redacted]

UNCLASSIFIED

[redacted]

[redacted]

TABLE OF CONTENTS

	Page
Introduction	5
Test Objectives	5
Summary	5
Description of Test Vehicles	5
Instrumentation	7
Test Results	7

[redacted]

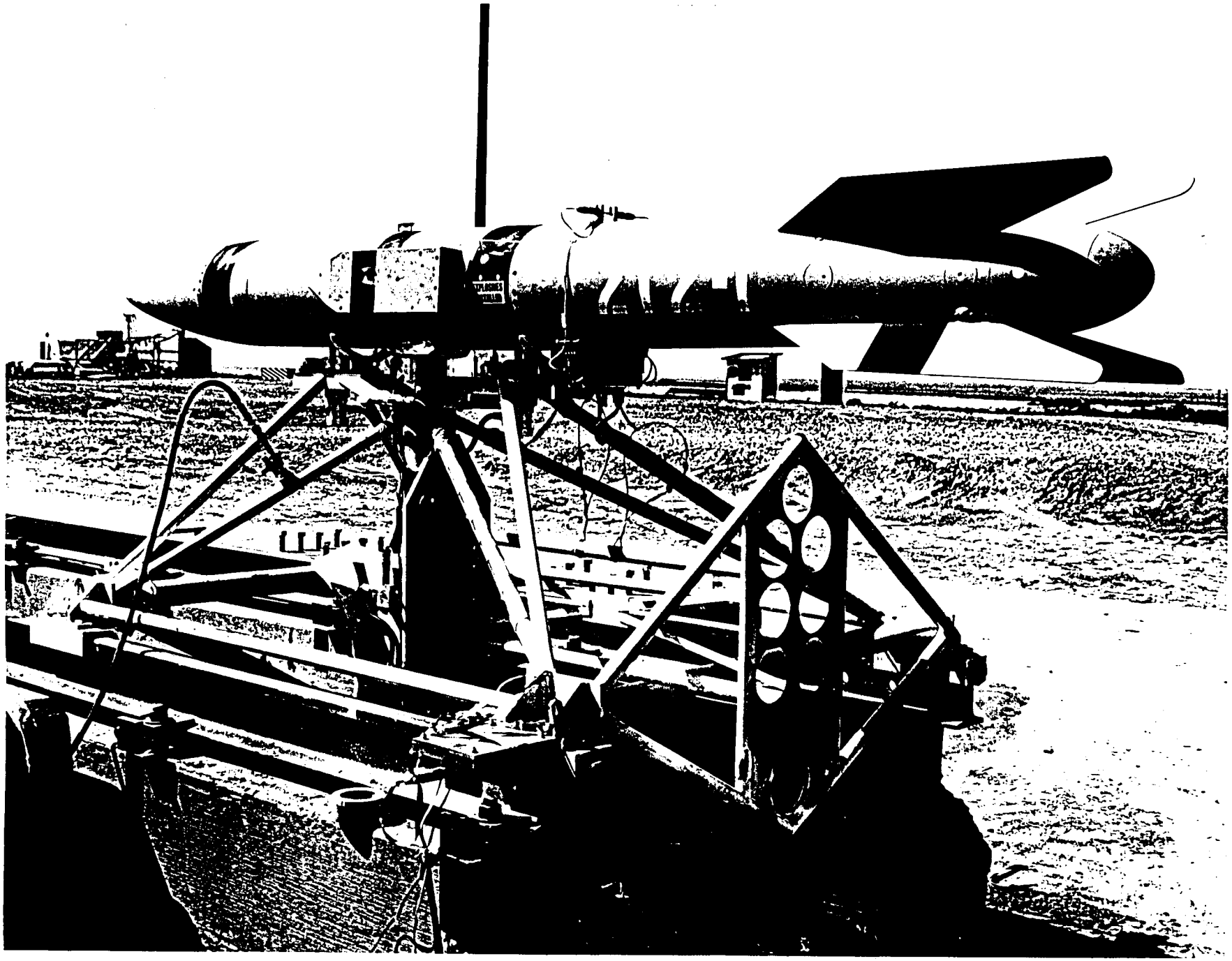

Frontispiece TX-61 loaded on high speed sled

RESULTS OF TX-61 WEAPON TESTS 212-1 AND 212-2

Introduction

Weapon tests 212-1 and 212-2 were ballistic high-speed parachute-evaluation sled tests for the TX-61 weapon.

TABLE I

Test	212-1	212-2
Date	November 7, 1964	December 21, 1964
Carrier	Ejector sled	Ejector sled
Sled velocity at separation	1270 fps	1290 fps
Unit temperature condition	-50°F	Ambient

Test Objectives

The purpose of these tests was to evaluate the parachute and parachute deployment system in a high "Q" environment at various temperature conditions.

Summary

212-1 - The unit ejected from the sled prematurely, due to failure of the screw-in type front lug.*

212-2 - The unit ejected prematurely because the saddle-type lug pulled off the case.*

Description of Test Vehicles

Mechanical

Figure 1 defines Test Vehicles 212-1 and 212-2.

Each test unit utilized an empty two-piece nose, an aluminum center case, a preflight case section, a radial-screw-joint tail, and the necessary interconnecting hardware. Weights were added to make up the correct total weight and center of gravity.

*The tests exceeded the design load of the lugs, and therefore are not considered valid as far as lug failure is concerned.

Instrumentation

The instrumentation was the same for both test units: cameras mounted on the test unit in addition to the ground stations.

Two photosonic Model 1-F 16-mm cameras (1000 frames per second) were mounted at Station 64.0, one on each side of the test unit (Figure 2).

Post-impact pictures were taken with hand-held cameras.

Test Results

A summary of test data for these two tests is given in Table III.

TABLE III

	212-1	212-2
Launch station	2985	2985
Ejection station	1400	975
Number of stages	Two	Two
Max. sled acceleration	24.4 g	33.4 g
Sled velocity at ejection	1270.9 fps	1292.0 fps
Parachute timer setting	1.5 seconds	1.0 second
Parachute deployment time	- - -	- - -
Wind velocity (fps)	5.8	1.0
Wind direction	SSW	South
Air pressure	632 mm	- - -
Air temperature	36°F	34°F
Impact station	-1340	-550
Total flight time	- - -	9.070 seconds
Temperature of unit	-50°F	Ambient

Test 212-1

The preflight section, afterbody, and deployment mechanism were preconditioned to approximately -50°F after being subjected to 5 days of 95-percent relative humidity.

The test unit was loaded on the ejector sled. Two stages of 14 HVAR's and 10 Zuni rocket motors were used to obtain a maximum velocity of 1541 fps.

Because of excessive vibration on the track, the front lug (screw-in type) pulled out of the case before the programmed ejection, at a velocity of 1270 fps, and the unit self-ejected, causing the rear lug to tear out of the weapon case (Figure 3).

The shroud-line support structure failed during parachute deployment, releasing pressure into the preflight section (Figure 4). The parachute slowly deployed, but because of the high roll rate induced by the canted fins, the suspension lines were twisted, preventing full inflation of the parachute. Figure 2 shows damage sustained by the unit.

The temperature in the cold chamber around the afterbody was below -100°F, but there was so much loss through conduction of the exposed forward case that the entire tail section could not be lowered to -65°F (Figure 5).

The temperature of the XMC1835 gas generator was recorded to be -50°F just before launch.

The cold chamber, used to precondition the afterbody overnight, was removed one minute before launch.

Test 212-2

The object of this test was to evaluate the operation of the parachute and the parachute deployment system at a high dynamic pressure of 2700 lb/ft^2.

Telemetry recording and optical data were required.

The unit was loaded on the ejection sled and two stages of 24 HVAR's and 10 Zuni rocket motors were used to obtain a maximum velocity of 1752 fps.

Before the programmed ejection, the saddle lug pulled off the case center section at Station 1750 at a velocity of 1292 fps, and the unit self-ejected, causing the rear lug to tear free of the weapon case (Figure 6).

Shortly after the unit left the sled, the longitudinal axis of the unit became perpendicular to the flight path, and the tail broke off (Figure 7), causing the parachute to deploy and fully inflate. The unit impacted at a terminal velocity of about 80 fps. Figures 6 and 8 show the unit after impact.

After examination of the track in the area of Station 1750, the failure was attributed to track unevenness and insufficient alignment of the track for the high velocities; 7300 personnel were requested to take corrective action.

[redacted]

UNCLASSIFIED

Table IV shows the vertical and lateral accelerations.

TABLE IV

Time from Launch (sec)	Vertical Accelerations (g)	Lateral Accelerations (g)	Velocity (fps)
1.179	Second-stage ignition		820
1.319	+48	+11	850
1.335	-18	-16	870
1.554	+47	+ 5	1060
1.572	+16	+13	1080
1.673	+49	+ 1	1150
1.731	+40	+15	1190
1.809	- 8	-18	1240
1.812	+10	+15	1240
1.896	Unit separated from sled		1292

UNCLASSIFIED

[redacted]

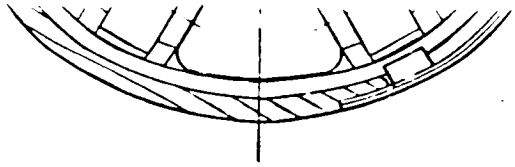

SECTION A-A

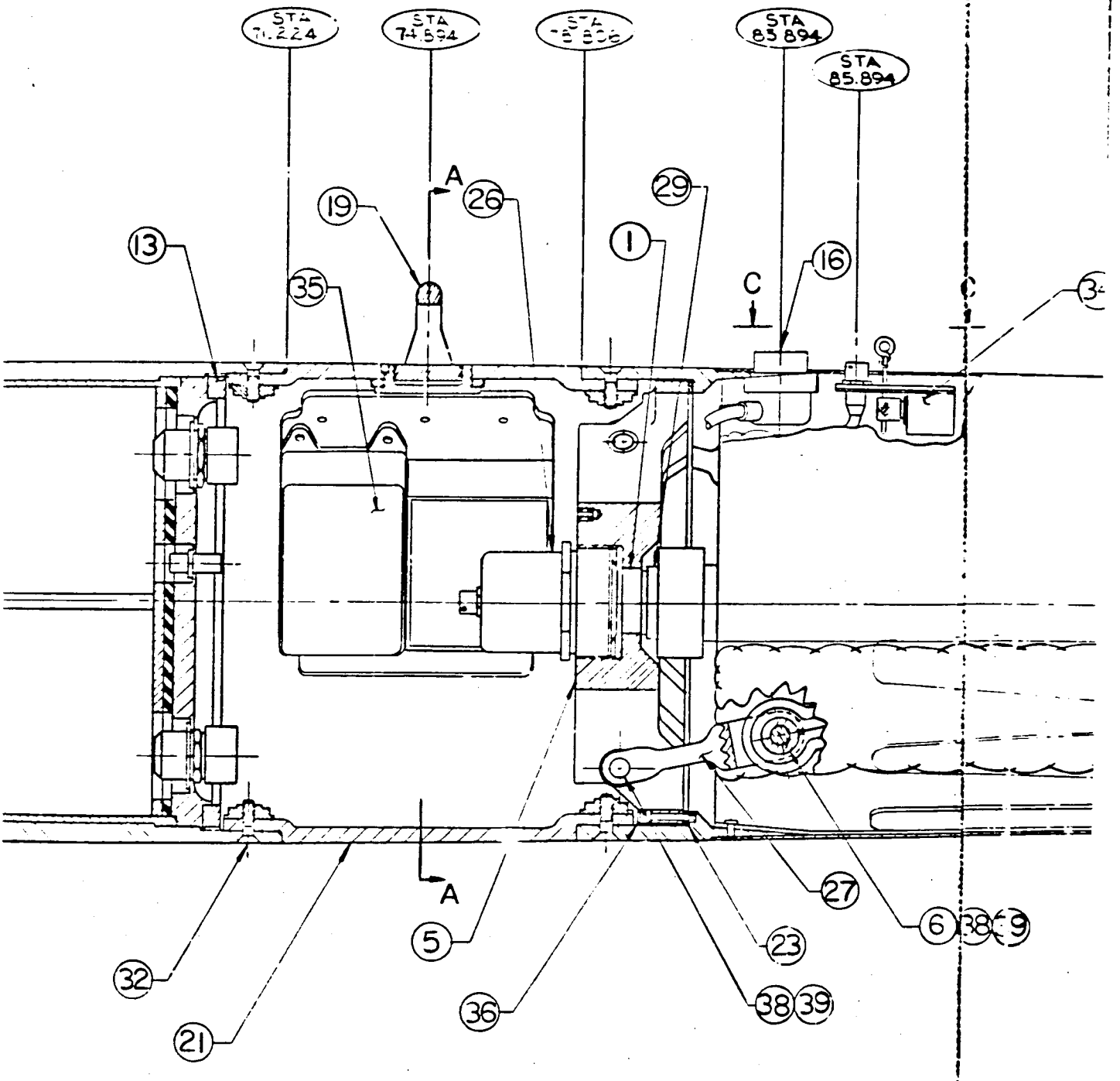
STA 71.224
STA 74.594
STA 83.894
STA 85.894
A
A
C
C
13
19
26
29
1
16
35
32
21
5
36
38
39
23
27
6
38
39

5 PLCS
DATUM: X (MMC)

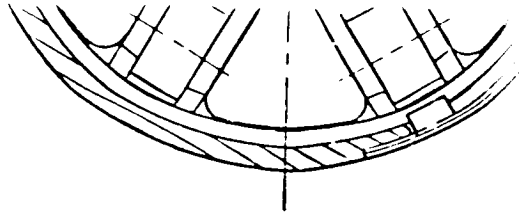

SECTION A-A

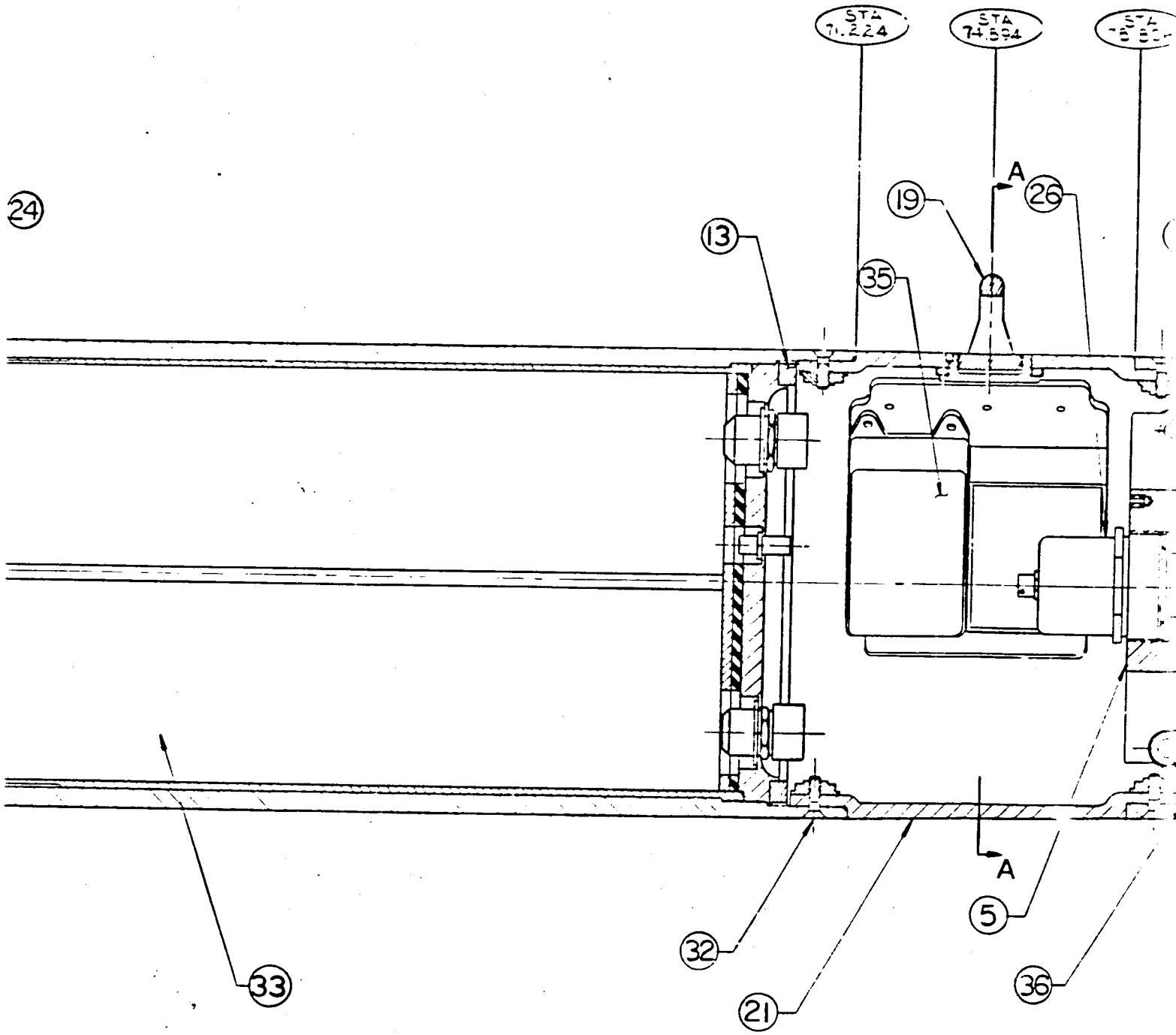

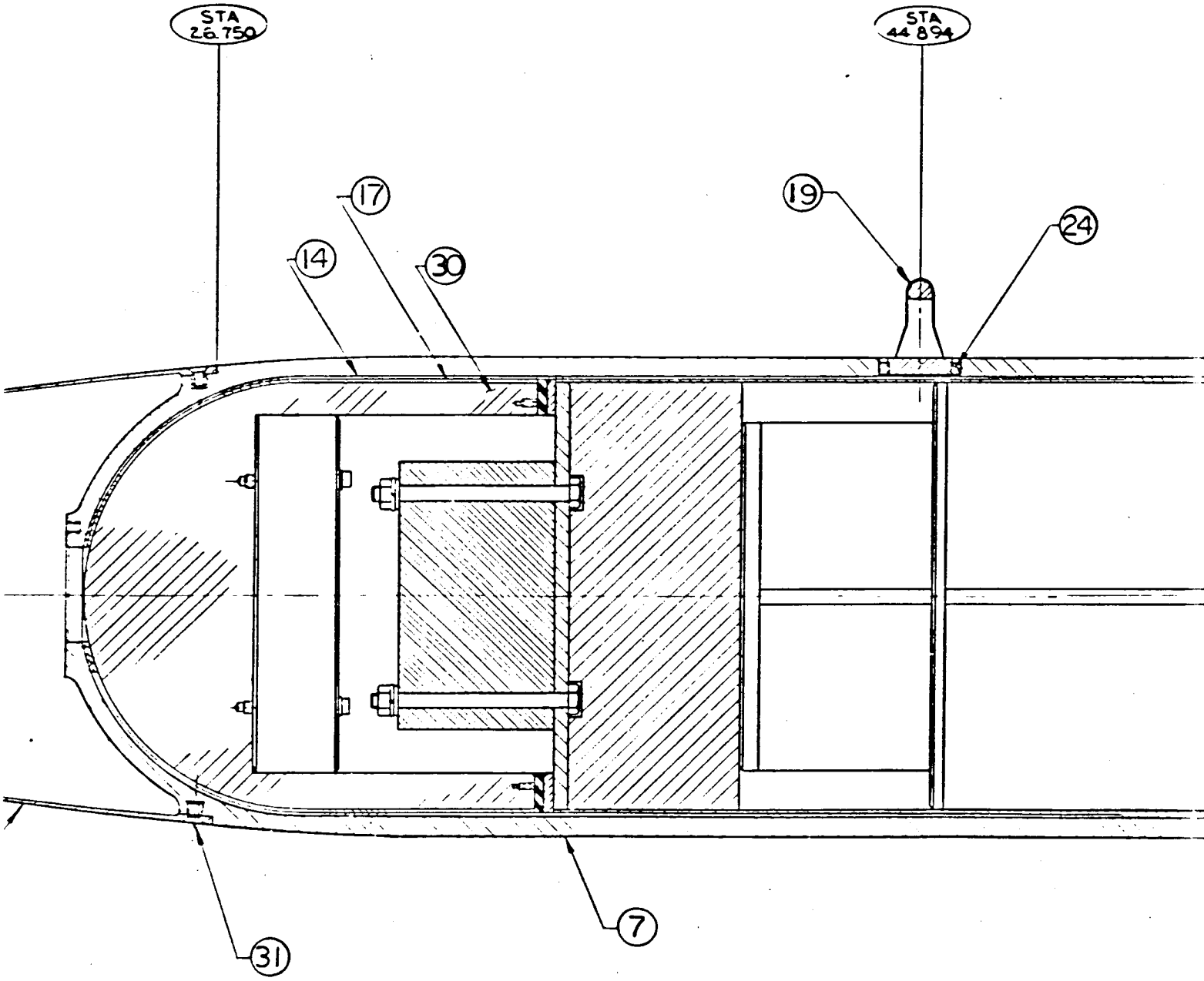

DR. NO. N65280
ISS. 1 SHT. 1
FR. 2 OF 2
CLASS SRD

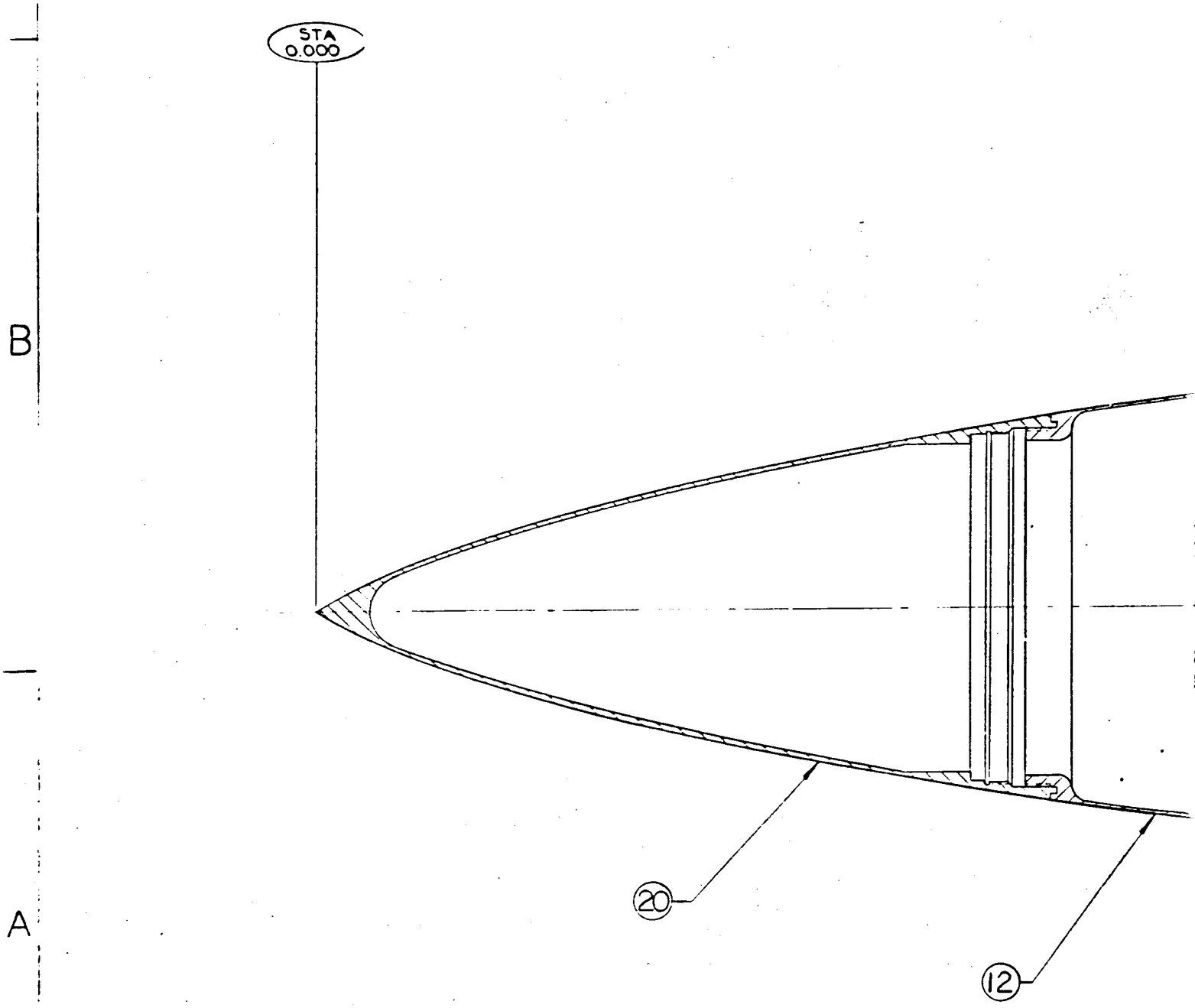

UNCLASSIFIED

8

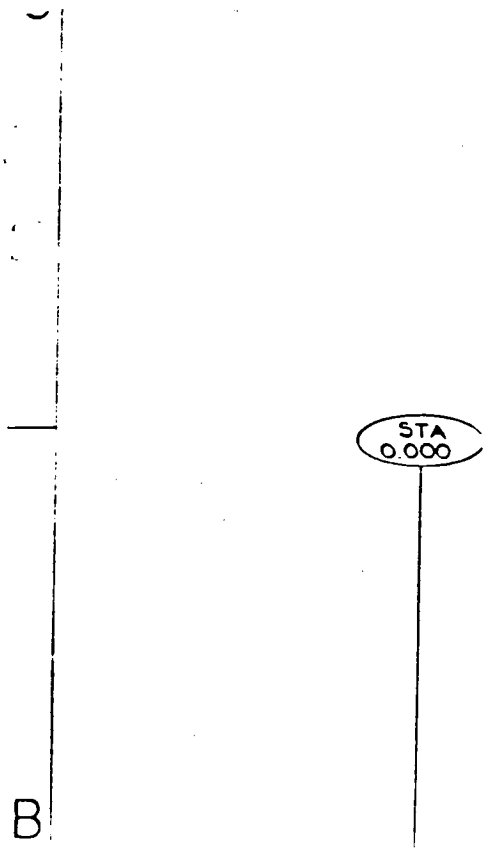

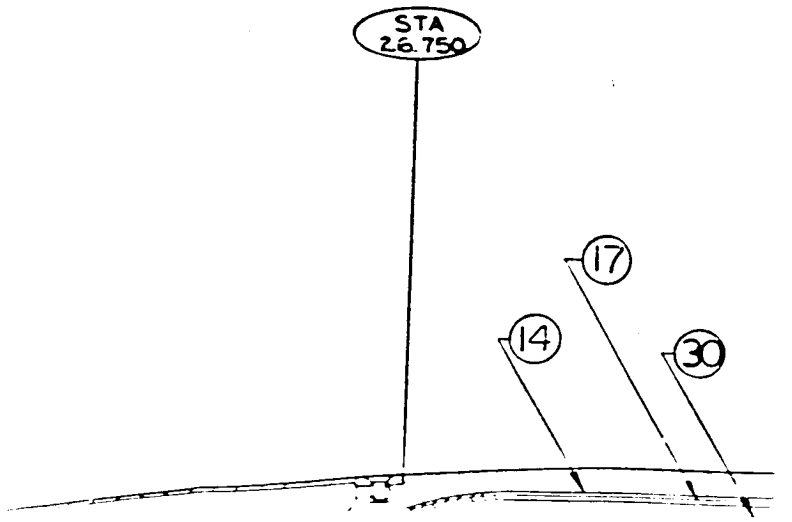
STA
26.750
17
14
30

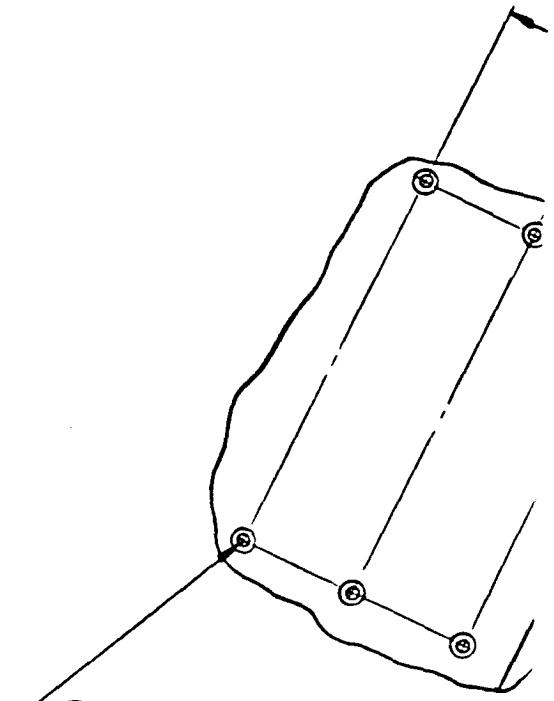

43 $\frac{.278}{.288}$ DRILL, 6 HOLES
81° ± 1° CSK TO .512 ± .005
ACROSS SMALLEST DIM
6 PLCS
POSN TOL .014 DIA (MMC)
5 PLCS
DATUM: X (MMC)

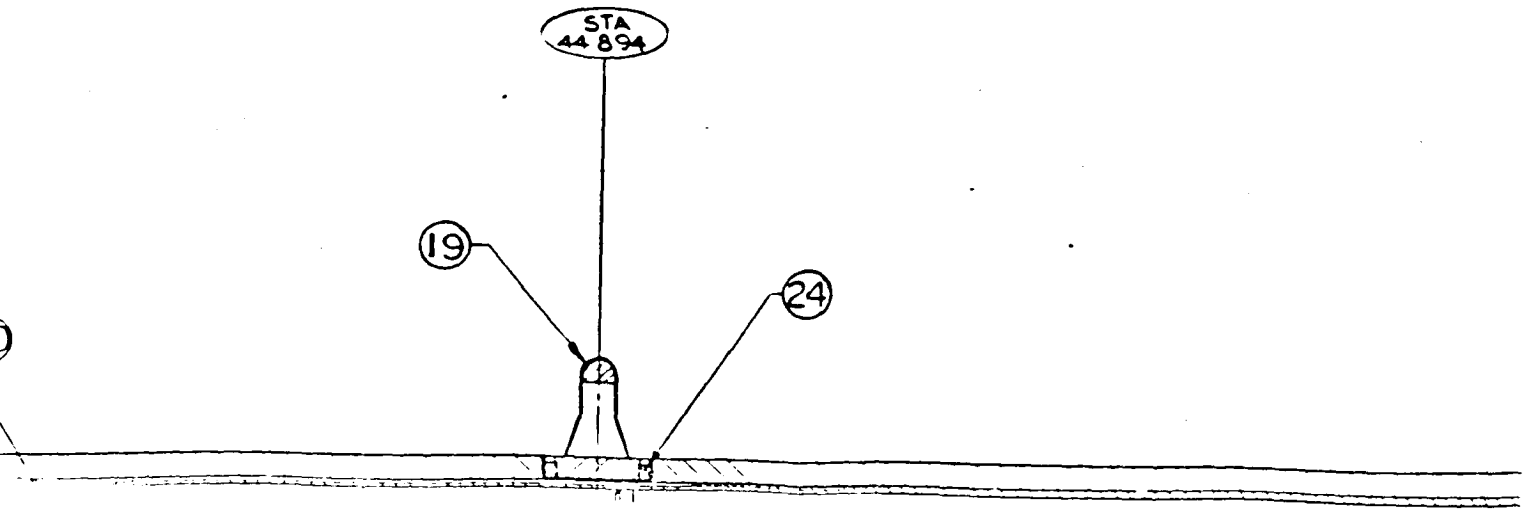

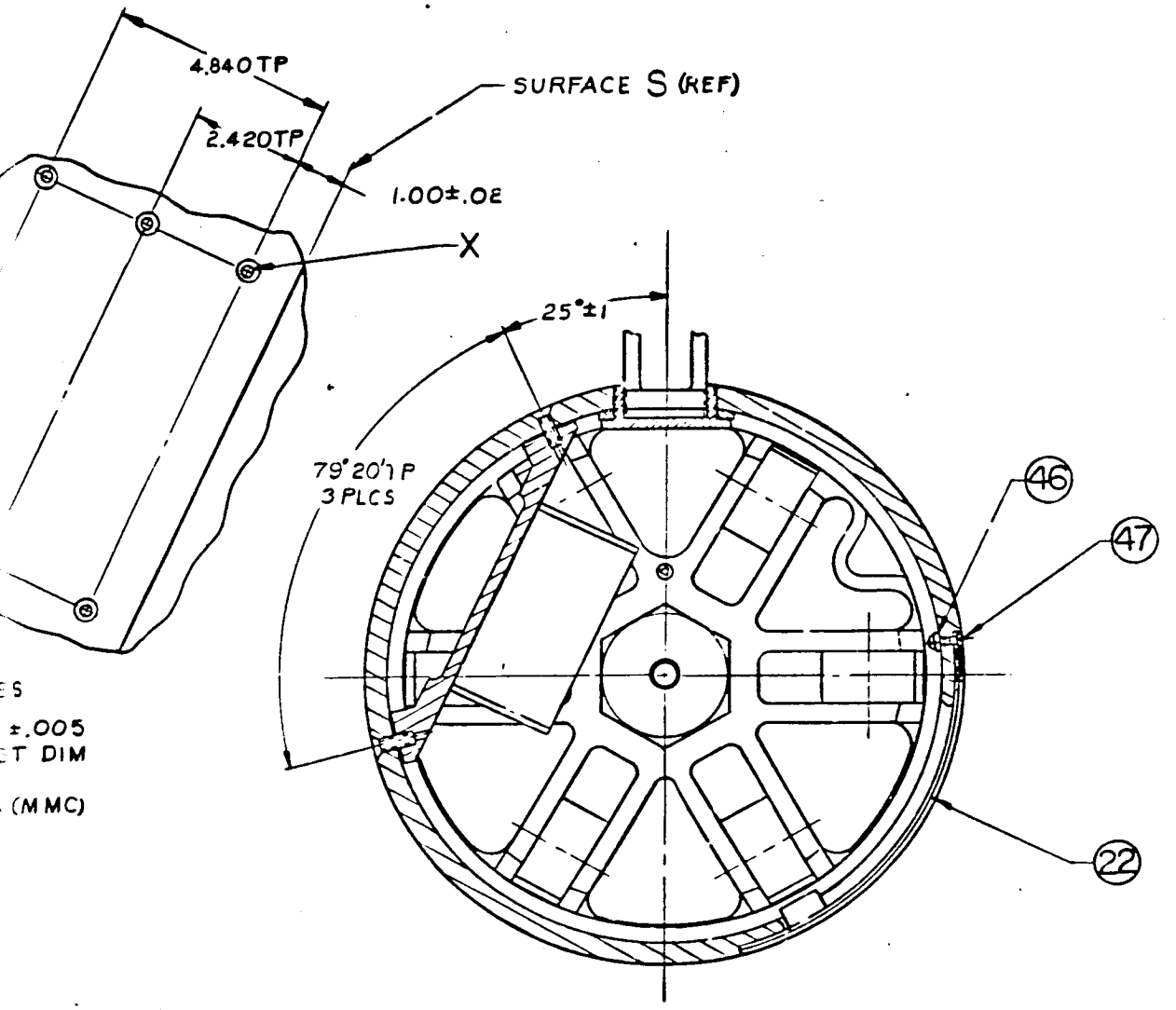
4.840TP
2.420TP
SURFACE S (REF)
1.00±.02
X
25°±1
79°20'TP
3 PLCS
46
47
22
±.005
T DIM
(MMC)

SECTION A-A

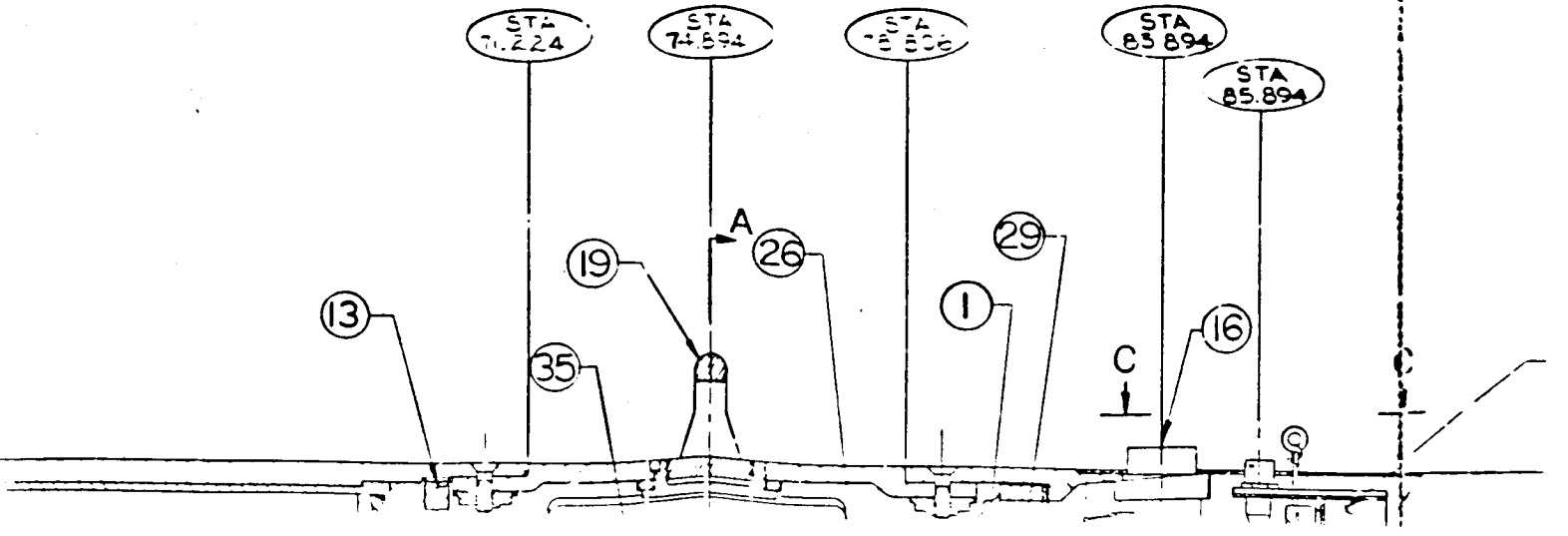
STA 85.894
STA 85.894
A
19
26
29
13
1
16
35
C

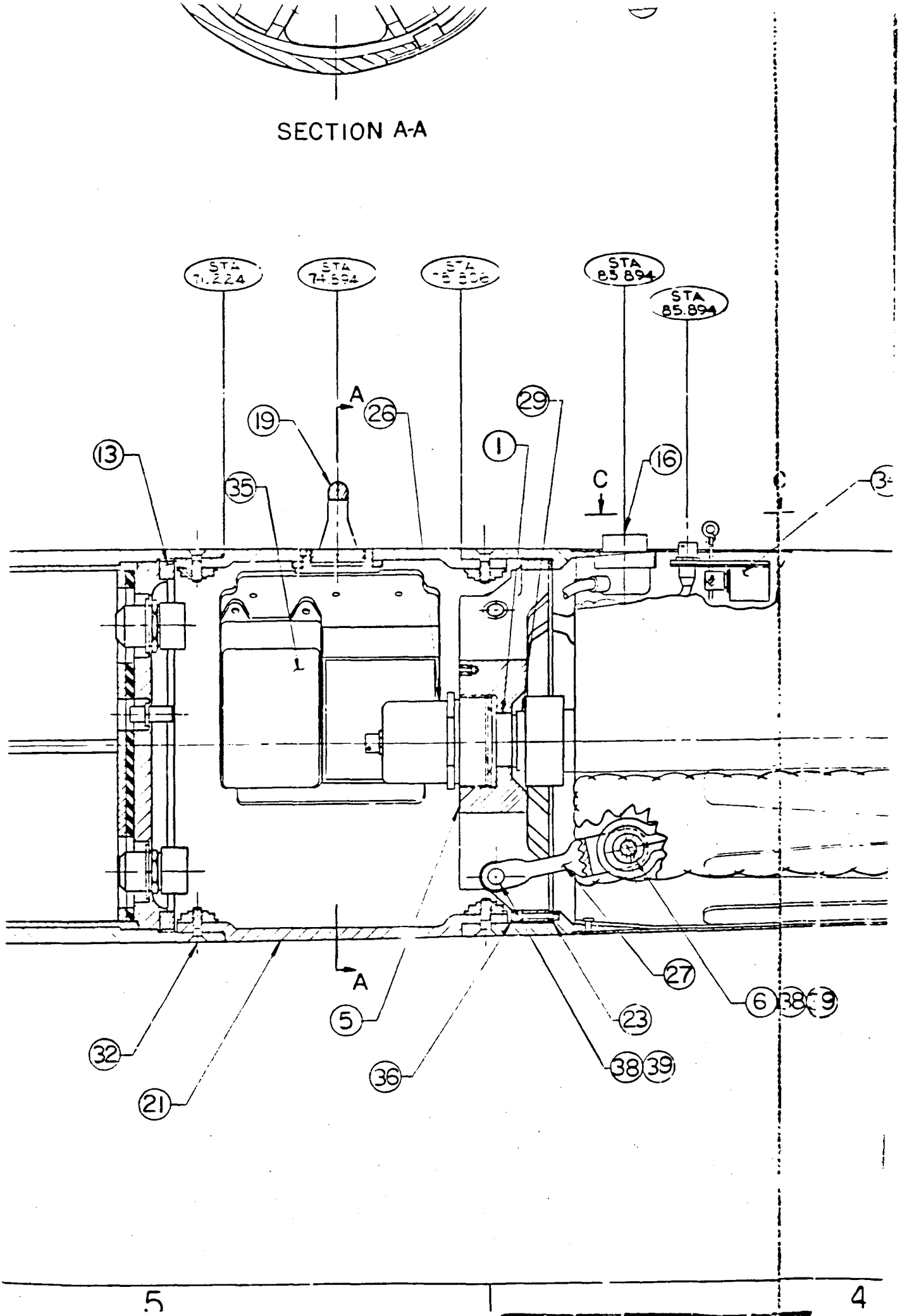
SECTION A-A
STA 71.224
STA 74.894
STA 85.894
STA 85.894
A
A
C
C
13
19
26
29
1
16
35
32
21
5
36
38 39
23
27
6 38 39
5
4

POSN TOL .014 DIA (MMC)
5 PLCS
DATUM: X (MMC)

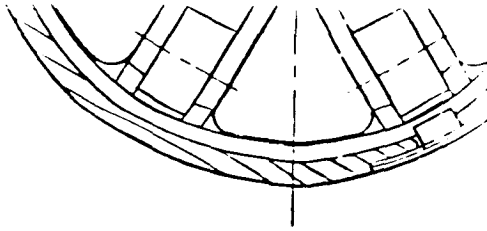

SECTION A-A

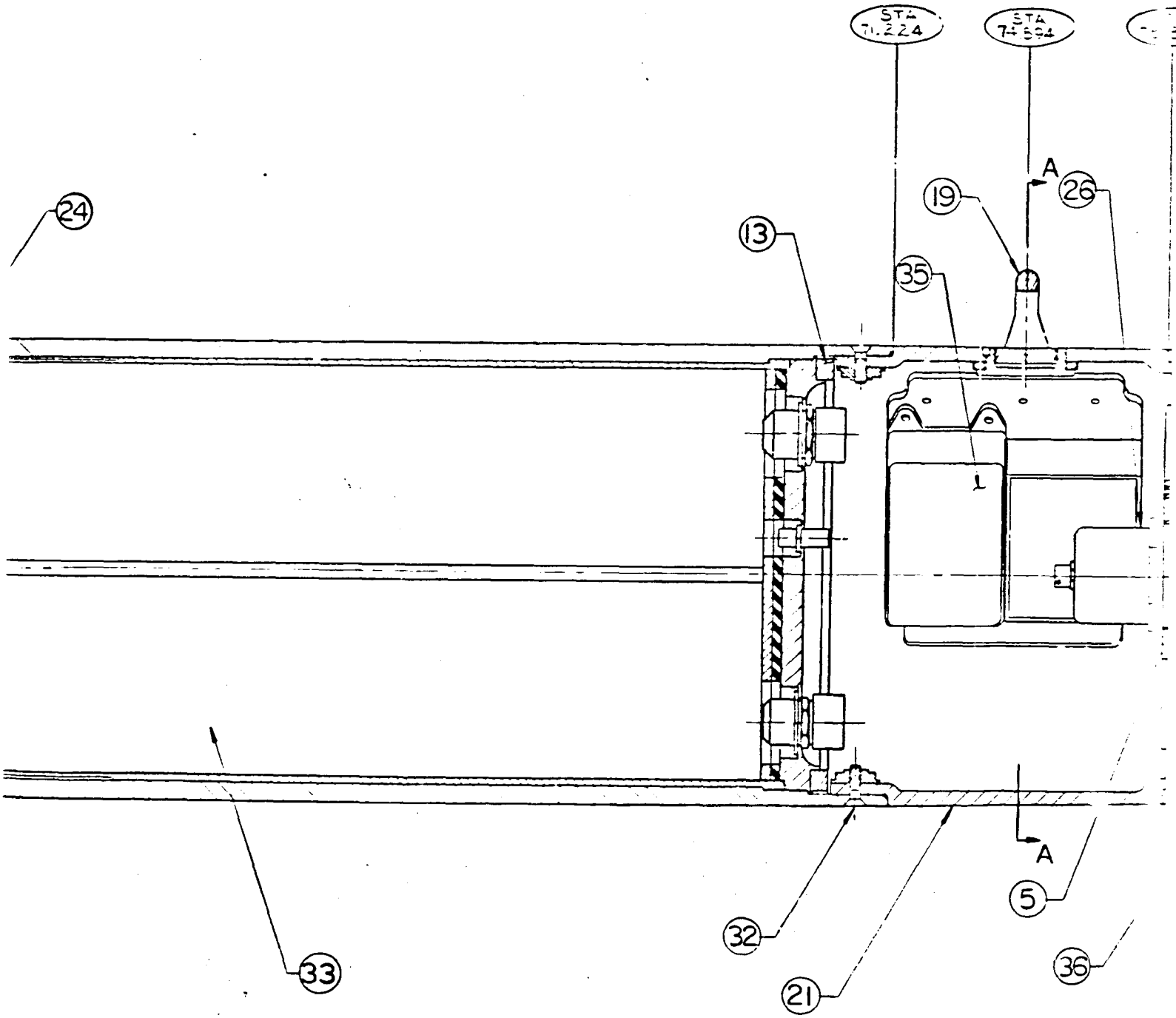

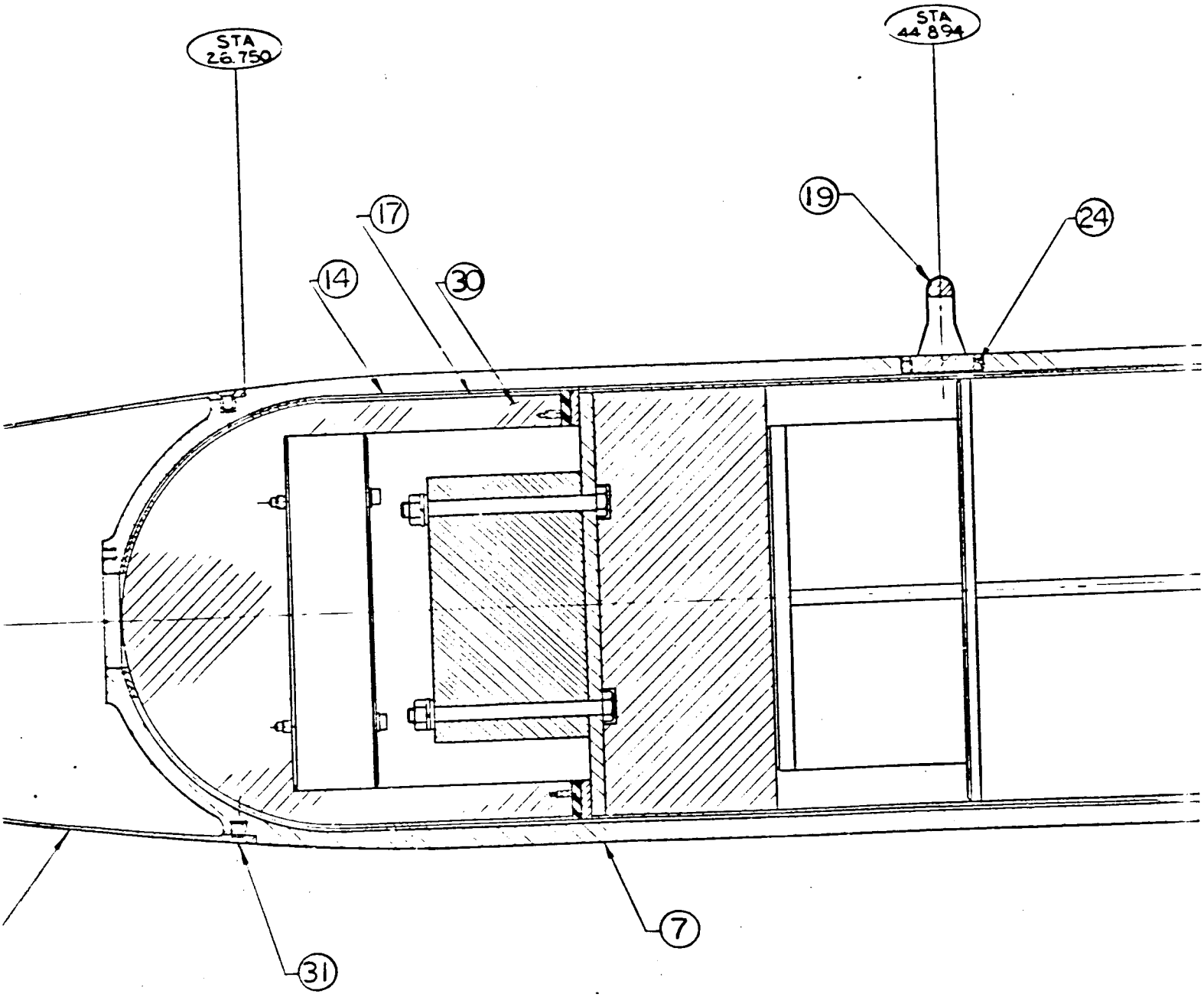

DR. NO. N65280
ISS. 1 SHT. 1
FR. 2 OF 2
CLASS SRD

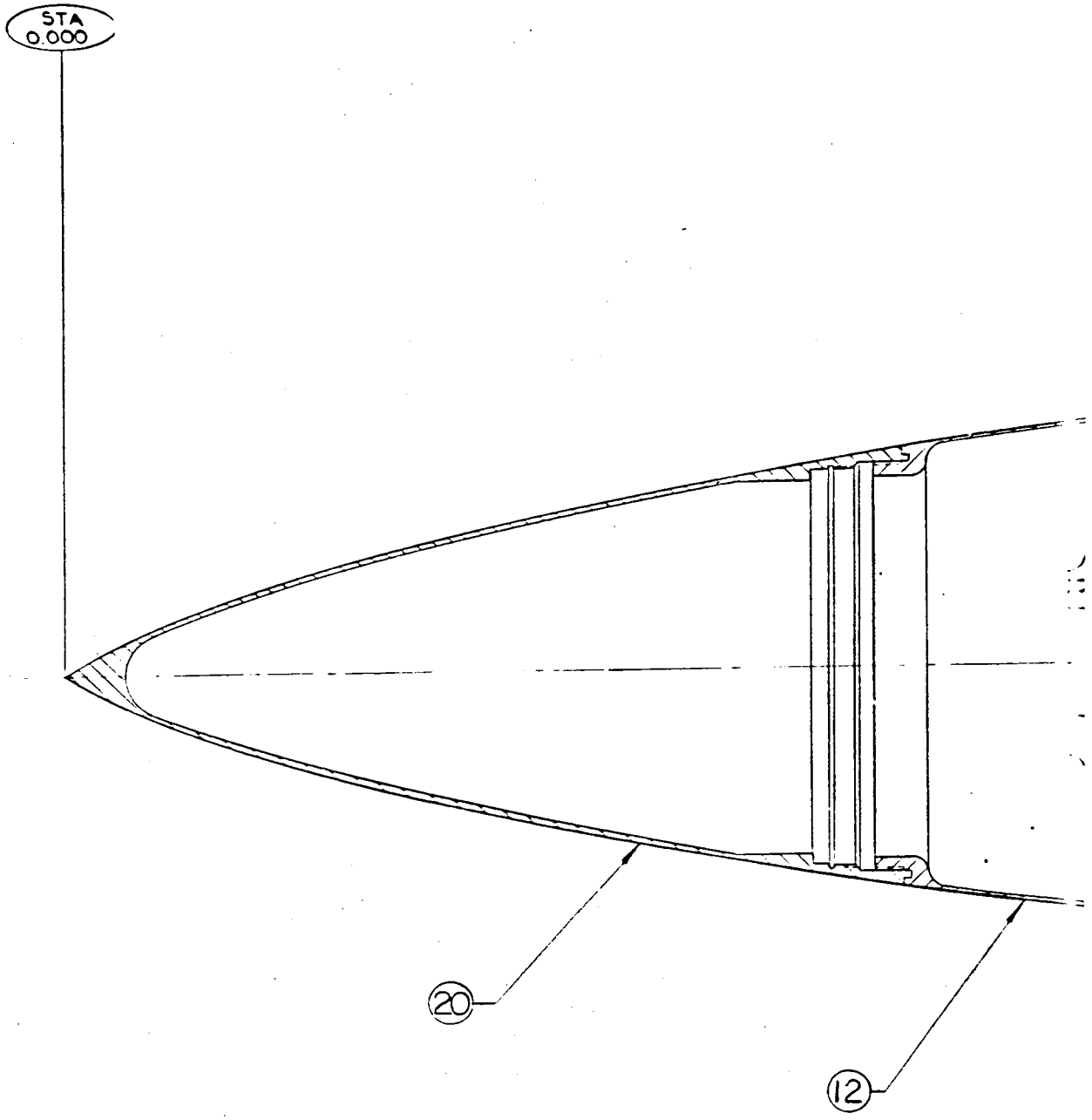

UNCLASSIFIED

8

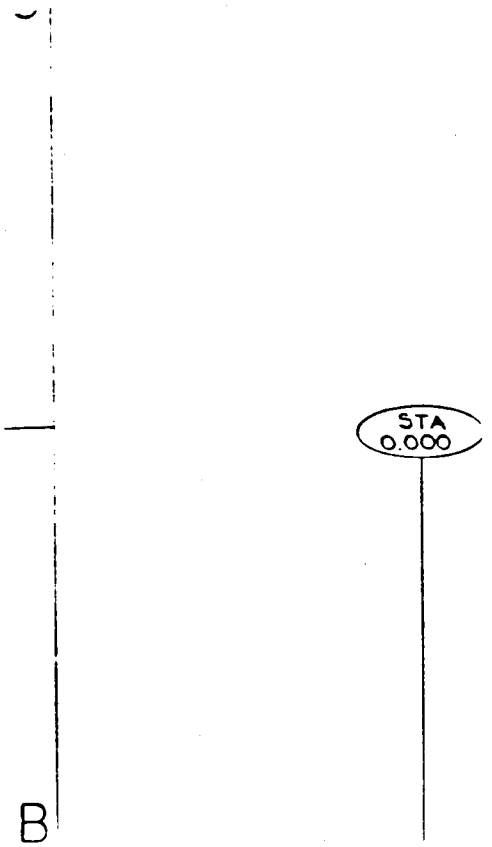

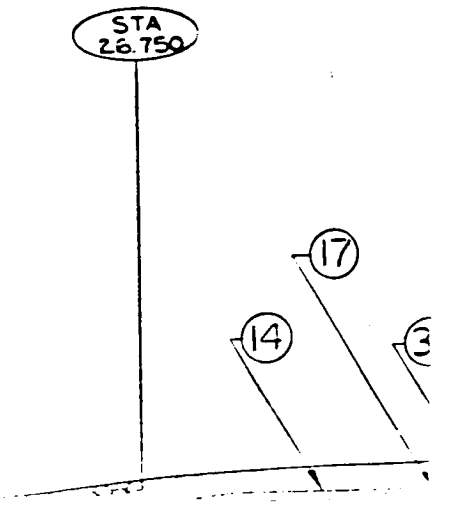
STA
26.750
17
14
3

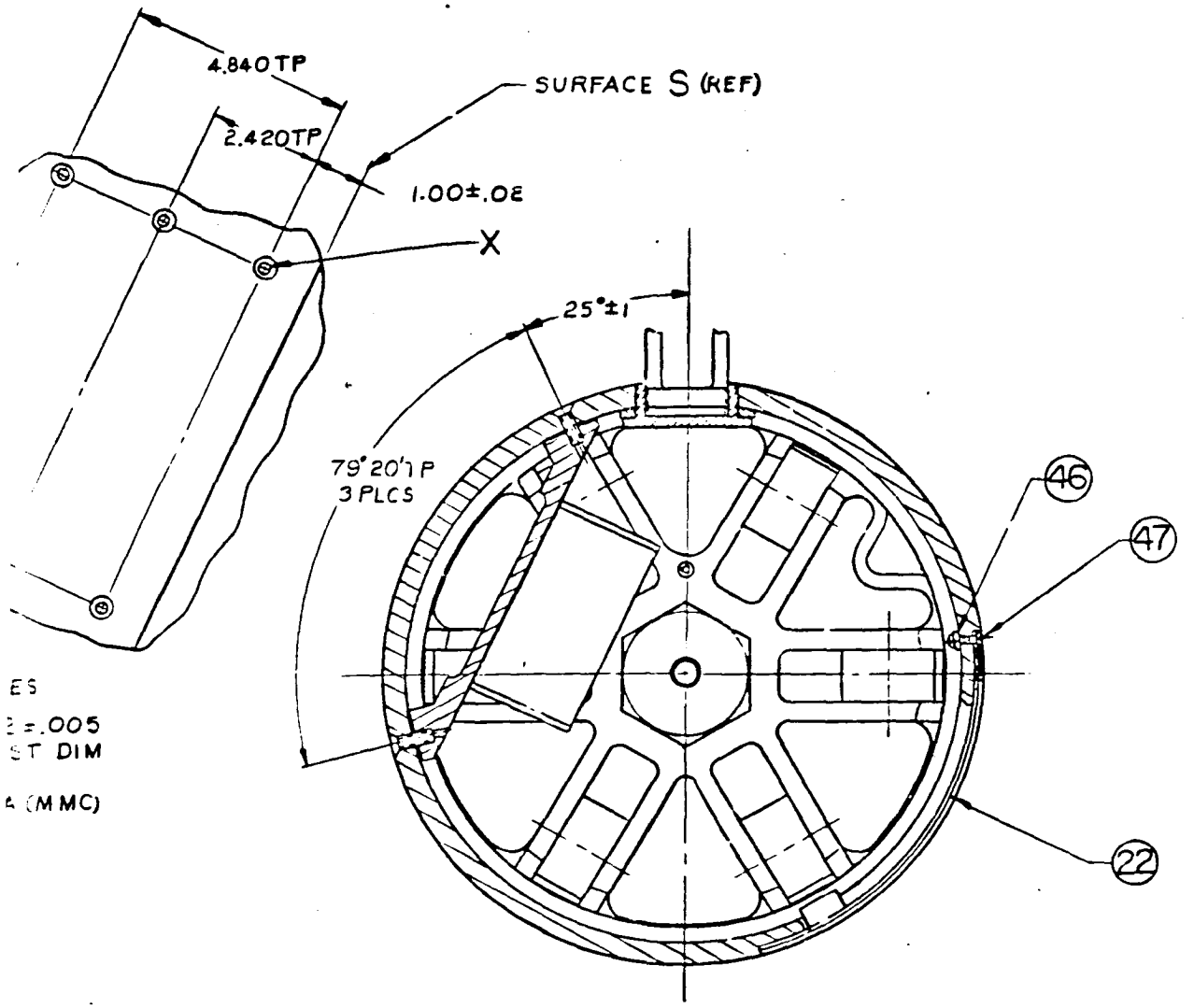
4.840TP
2.420TP
SURFACE S (REF)
1.00±.02
X
25°±1
79°20'TP
3 PLCS
46
47
22
ES
=.005
ST DIM
A (MMC)

SECTION A-A

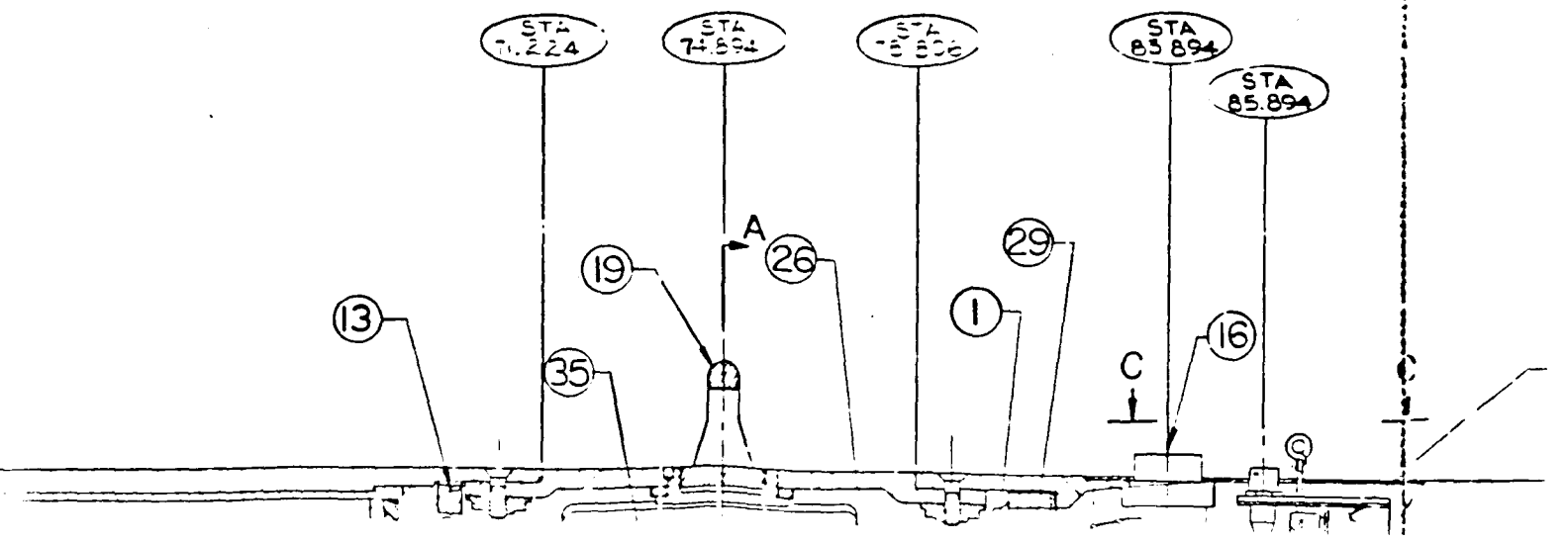
STA
71.224
STA
74.894
STA
85.894
STA
85.894
A
19
26
29
13
1
16
35
C
C

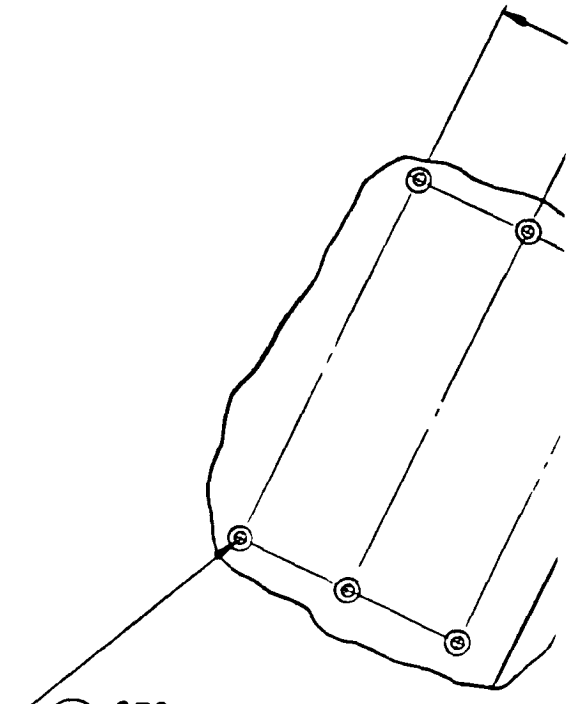

43 $\frac{.278}{.288}$ DRILL, 6 HOLES
81° ± 1° CSK TO .512 ± .005
ACROSS SMALLEST DIM
6 PLCS
POSN TOL .014 DIA (MMC)
5 PLCS
DATUM: X (MMC)

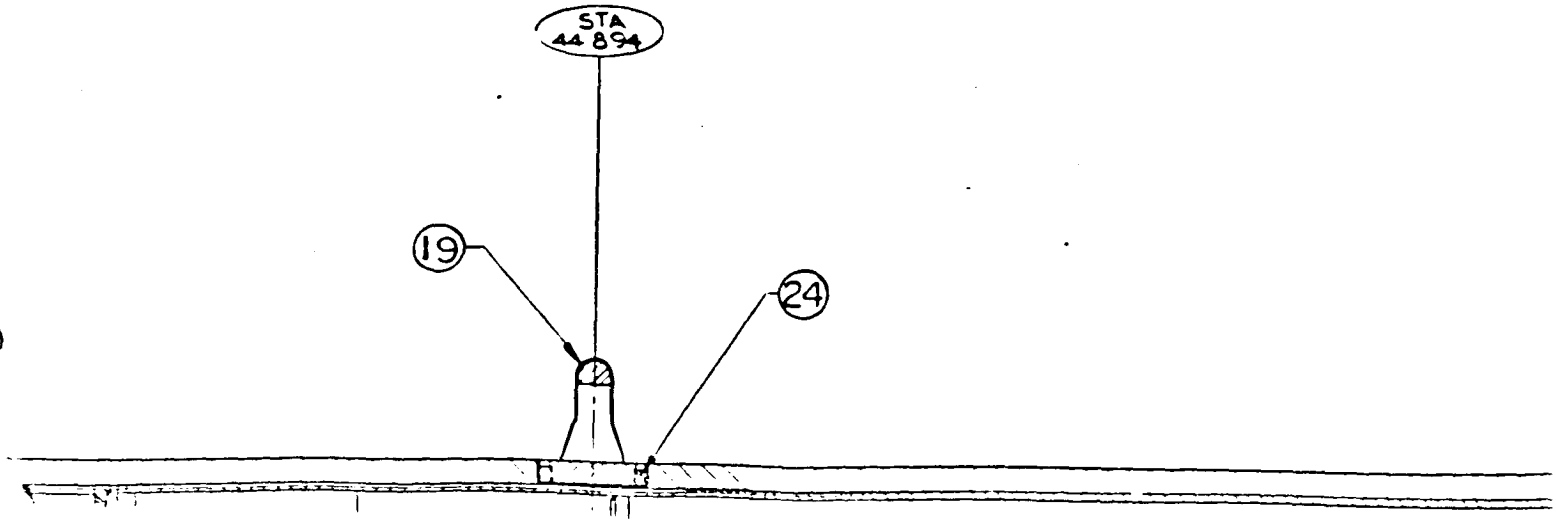

NO REQD	STD. MARKING NO.	DESCRIPTION	MATERIAL AND SPECIFICATION	NOTE	SHEET ZONE	ITEM
						49
						48
5	AN509-10R12	SCREW, MACH 100° CSK HD				47
5	AN363-1032	NUT, SELF LOCK				46
						45
4	MS35225-44	SCREW, MACH, PAN HD				44
6	MS35193-72	SCREW, MACH 82° CSK HD				43
32	NAS1216-4-8	SCREW, PAN HD, "HI-TORQUE"				42
4	MS35456-23	SCREW, CAP, SOC HD				41
4	MS35192-42	SCREW, MACHINE 82° CSK HD				40
16	MS24665-285	PIN, COTTER				39
12	MS20392-7C67	PIN, FLAT HD				38
4	MS20392-7C57	PIN, FLAT HD				37
18	MS16997-37	SCREW, CAP, SOC HD				36
1	N60418	JUNCTION BOX, 103 (ISS 2)				35
1	N60473	PULLOUT ADAPTOR ASSY (103) (ISS 1)				34
1	N59546	TM INSTALLATION 101 (ISS. 2)		1		33
72	194092-00	SCREW, SPECIAL (ISS 1)				32
36	194091-00	SCREW, SPECIAL (ISS 1)				31
1	N52816	FORWARD BALLAST (ITEMS 1 & 3) (ISS 5)				30
1	———	CUTTER MECHANISM (MODIFIED)				29
1	(AF)	PARACHUTE (16 FT) (MODIFIED)		2		28
6	N65376	LUG DESIGN NO. 3				27
1	311784-00	XMC 1835				26
						25
1	186792-00	INSERT (ISS 2)				24
1	192174-00	INSULATOR, THERMAL (ISS 2)				23
1	195303-00	DOOR, ACCESS (ISS 2)				22
1	192169-00	CASE SECTION, PREFLIGHT (ISS 3)				21
1	192148-00	CASE SECTION, NOSE (ISS 2)				20
2	192132-00	LUG, SUSPENSION (ISS 2)				19
1	192125-00	DEPLOYMENT PLATE (MACHINED) (ISS 3)				18
1	192114-00	SPACER (ISS 3)				17
1	38923-00	CABLE ASSY (P/O) (ISS 2)				16
1	186753-00	CAP AND BOLT, REAR (ISS 3)				15
1	186774-00	SLEEVE (ISS 3)				14
1	186733-00	RING, EXTERNALLY THREADED (ISS 3)				13
1	186735-00	CASE EXTENSION, NOSE (ISS 2)				12
4	186730-00	FIN (ISS 3)				11
4	180397-00	COVER AND SCREW, AFT (ISS 2)				10
4	180396-00	COVER AND SCREW, FWD (ISS 2)				9
1	180391-00	CASE SECTION, REAR (ISS 5)				8
1	180388-00	CASE SECTION, CENTER (ISS 6)				7
6	180380-00	ROLLER				6
1	180372-00	SUPPORT, SHROUD LINE (ISS 9)				5
1	180370-00	CASE EXTENSION, REAR (ISS 3)				4
8	180364-00	PIN, SHEAR (ISS. 1)				3
1	180363-00	TUBE-PLUG (ISS 2)				2
1	180361-00	TUBE ALUMINUM-INSIDE (ISS 3)				1

NOTE: AN ASTERISK (*) DENOTES AN REQUIRED INSPECTION STAMP OR EQUIVALENT

LIST OF MATERIAL

DWG CLASSIFICATION LEVEL: [redacted]

PART CLASSIFICATION: [redacted]

SHEET 1
ISSUE 1

SHEET INDEX

CLASSIFICATION CATEGORY: [redacted]

ORG	DATE	REMARKS

MFG AGENCY APPROVALS

TITLE: TX-61 SLED. CHUTE EVALUATION

FIRST APPLICATION

SIZE: J

MFG AGENCY NO.

DWG NO. N65280

SCALE 1/2

DOC. REF. SYM.

SHEET 1 OF 1

GROUP 1 – EXCLUDED FROM AUTOMATIC DOWNGRADING AND DECLASSIFICATION

[redacted]

N65280

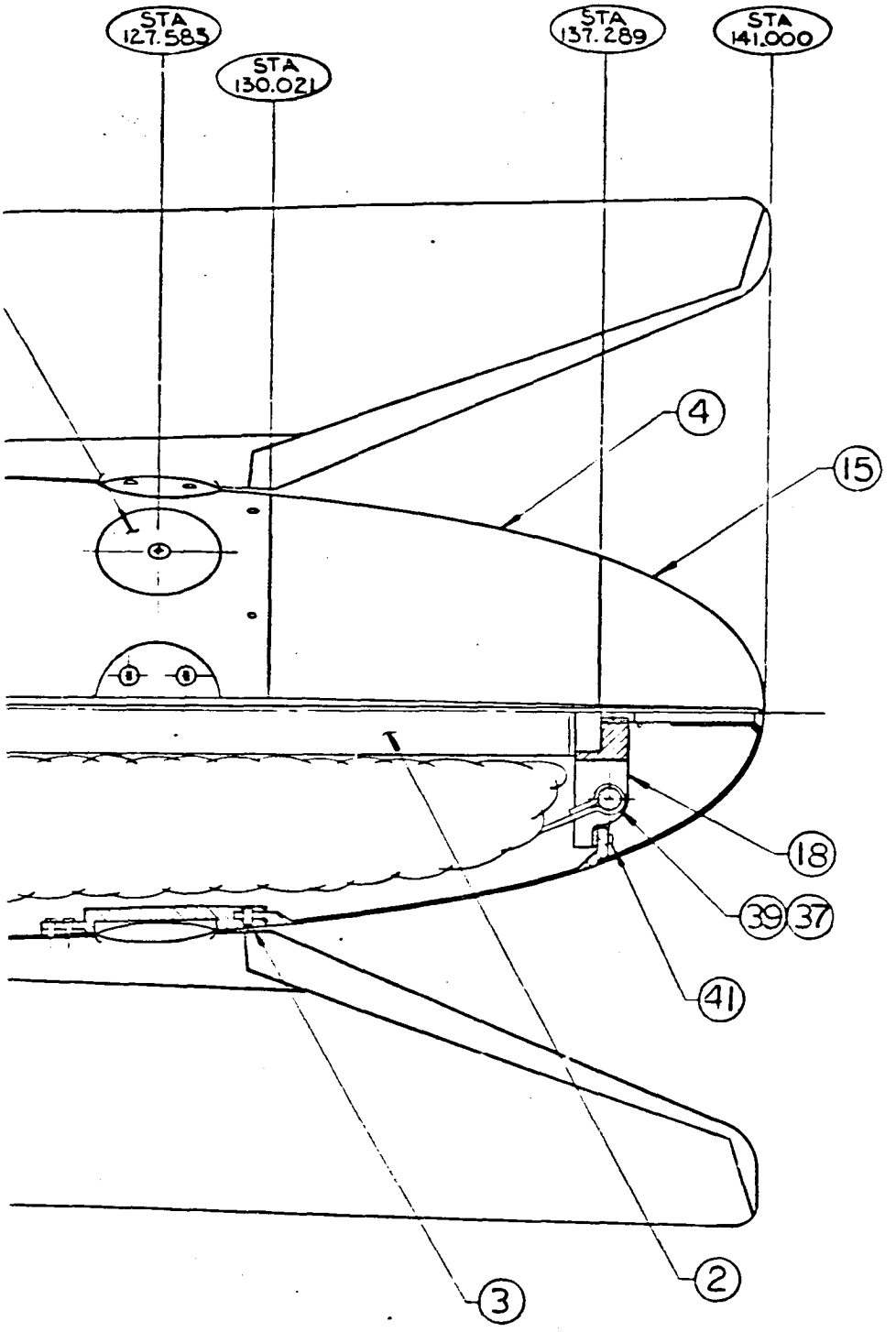

5	AN509-10R12	SCREW, MACH 100° CSK
5	AN363-1032	NUT, SELF LOCK
4	MS35225-44	SCREW, MACH, PAN
6	MS35193-72	SCREW, MACH 82° CS
32	NAS1216-4-8	SCREW, PAN HD, HI-
4	MS35456-23	SCREW, CAP, SOC HD
4	MS35192-42	SCREW, MACHINE 82
16	MS24665-285	PIN, COTTER
12	MS20392-7C67	PIN, FLAT HD
4	MS20392-7C57	PIN, FLAT HD
18	MS16997-37	SCREW, CAP, SOC HD
1	N60418	JUNCTION BOX, 103 (IS
1	N60473	PULLOUT ADAPTOR
1	N59546	TM INSTALLATION 101 (ISS
72	194092-00	SCREW, SPECIAL (IS
36	194091-00	SCREW, SPECIAL (ISS
1	N52816	FORWARD BALLAST (IT
1	———	CUTTER MECHANISM
1	(AF)	PARACHUTE (16 FT)
6	N65376	LUG DESIGN NO. 3
1	311784-00	XMC 1835
1	186792-00	INSERT (ISS 2)
1	192174-00	INSULATOR, THERMA
1	195303-00	DOOR, ACCESS (ISS 2
1	192169-00	CASE SECTION, PREF
1	192148-00	CASE SECTION, NOSE
2	192132-00	LUG, SUSPENSION (I
1	192125-00	DEPLOYMENT PLATE(
1	192114-00	SPACER (ISS 3)
1	188923-00	CABLE ASSY (P/O)
1	186753-00	CAP AND BOLT, REA
1	186774-00	SLEEVE (ISS 3)
1	186733-00	RING, EXTERNAL THREA
1	186735-00	CASE EXTENSION, NO
4	186730-00	FIN (ISS 3)
4	180397-00	COVER AND SCREW, A
4	180396-00	COVER AND SCREW, F
1	180391-00	CASE SECTION, REAR
1	180388-00	CASE SECTION, CENT
6	180380-00	ROLLER
1	180372-00	SUPPORT, SHROUD LI
1	180370-00	CASE EXTENSION, R
8	180364-00	PIN, SHEAR (ISS. 1)
1	180363-00	TUBE-PLUG (ISS 2)
1	180361-00	TUBE ALUMINUM-INS
NO REQD	DESIGN AGENCY NO.	DESCRIPTION

— AR DENOTES AS REQD — X INDICATES FORMS OR DOCUMENTS — LIST

DWG CLASSIFICATION LEVEL: [redacted]

PART CLASSIFICATION: [redacted]

CLASSIFICATION CATEGORY: [redacted]

ORG	DATE	INITIALS
1515		
4412		

MFG AGENCY APPROVALS

65280 SHEET 1 OF 1 FRAME 1 OF 2

2

GROUP 1 – EXCLUDED FROM AUTOMATIC DOWNGRADING AND DECLASSIFICATION

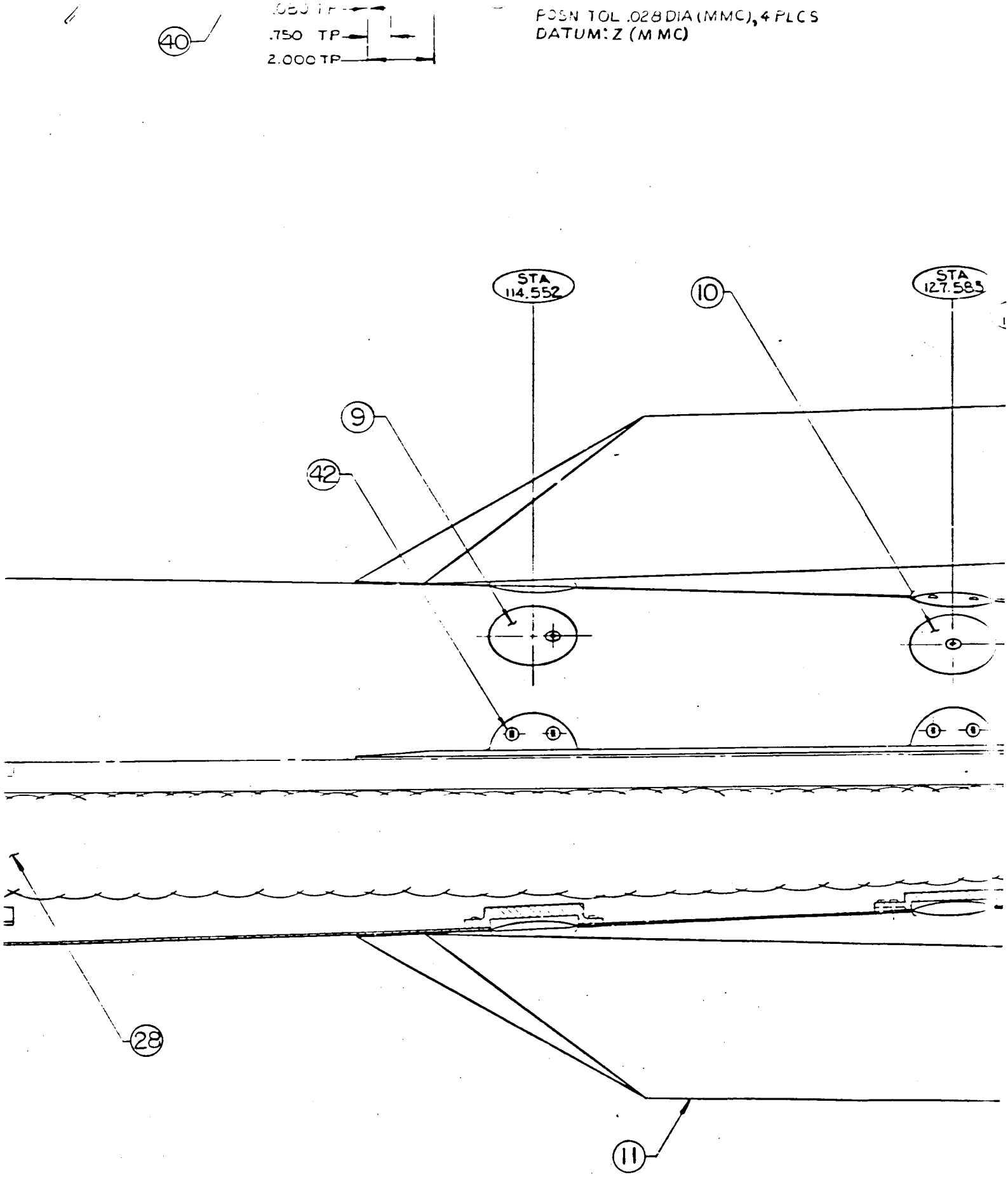

[redacted] N65280

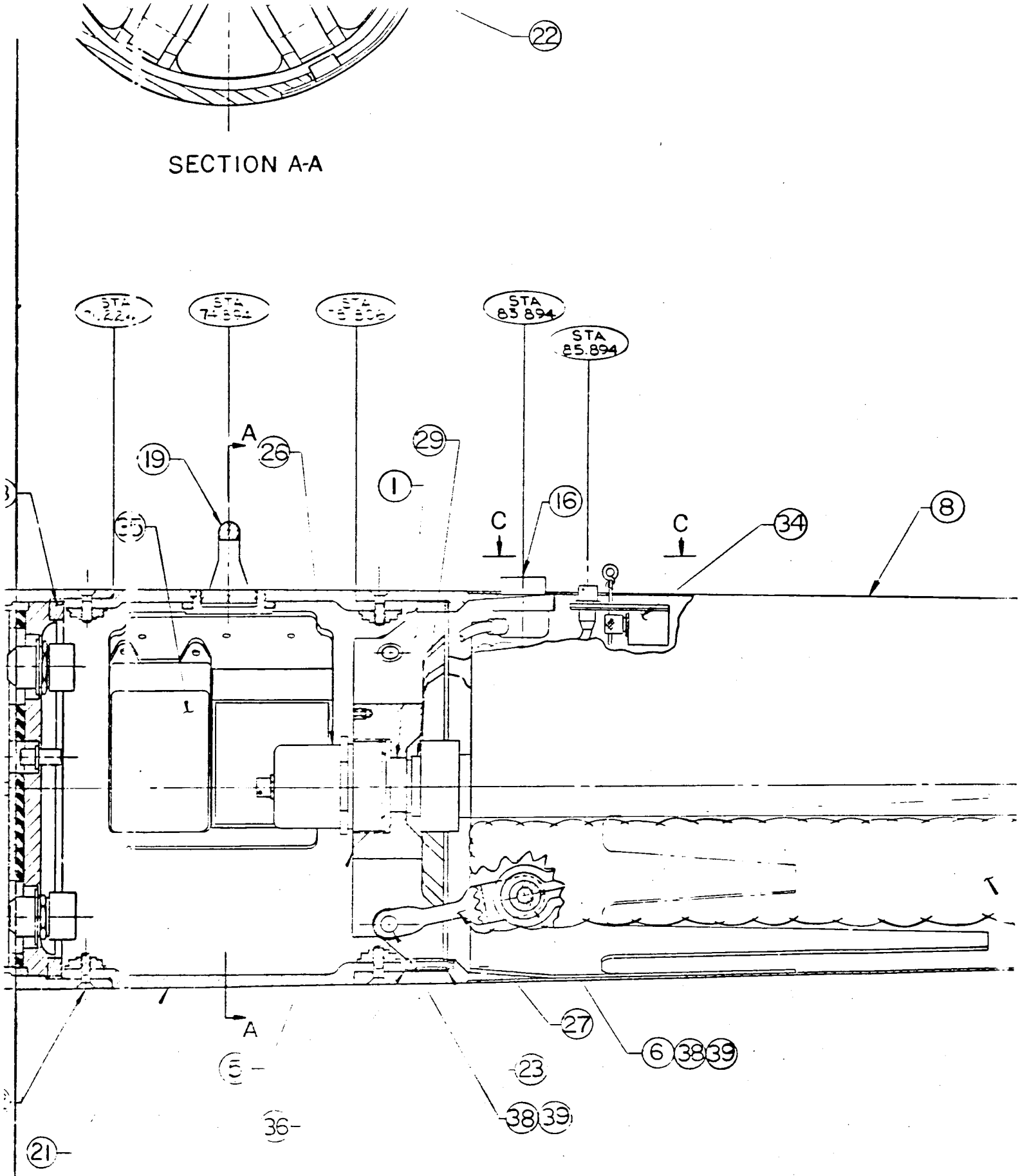
22
SECTION A-A
STA 83.894
STA 85.894
A
19
26
29
1
16
C
C
34
8
5
27
6
38
39
23
36
21

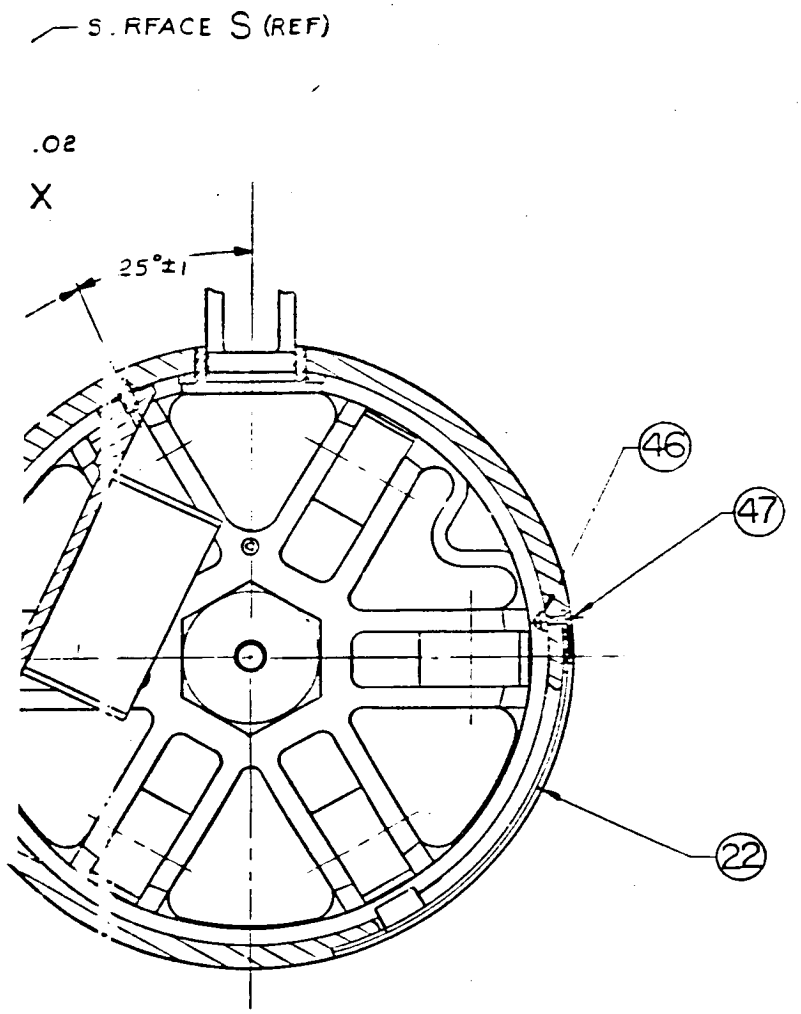
S. RFACE S (REF)
.02
X
25°±1
46
47
22

SECTION A-A

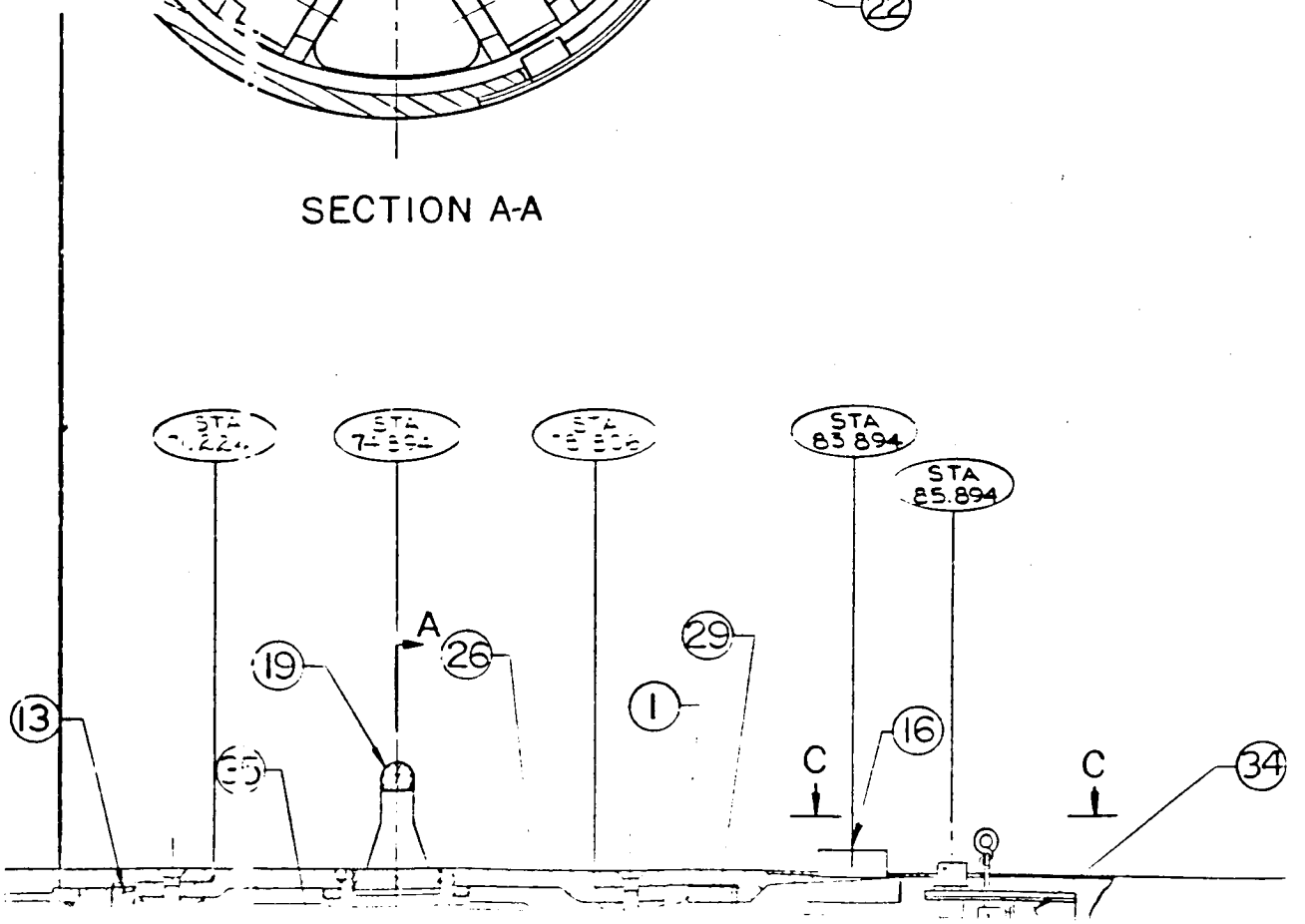
STA 85.894
STA 85.894
A
19
26
29
1
13
16
C
C
34

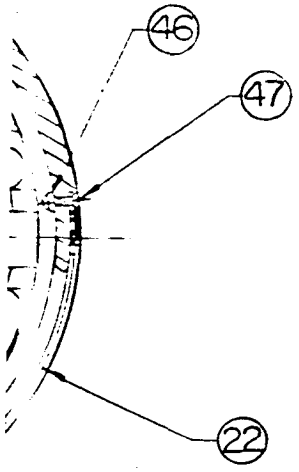
46
47
22

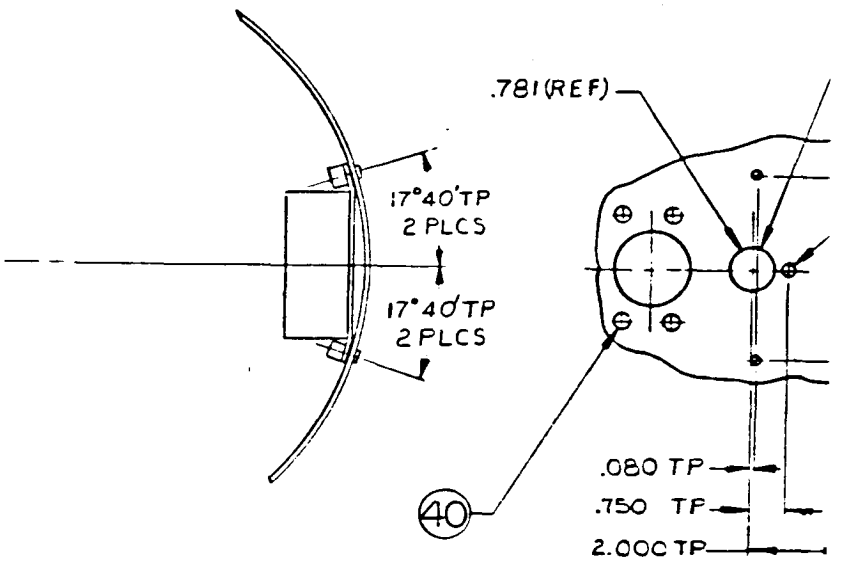
.781 (REF)
17°40' TP
2 PLCS
17°40' TP
2 PLCS
40
.080 TP
.750 TP
2.000 TP

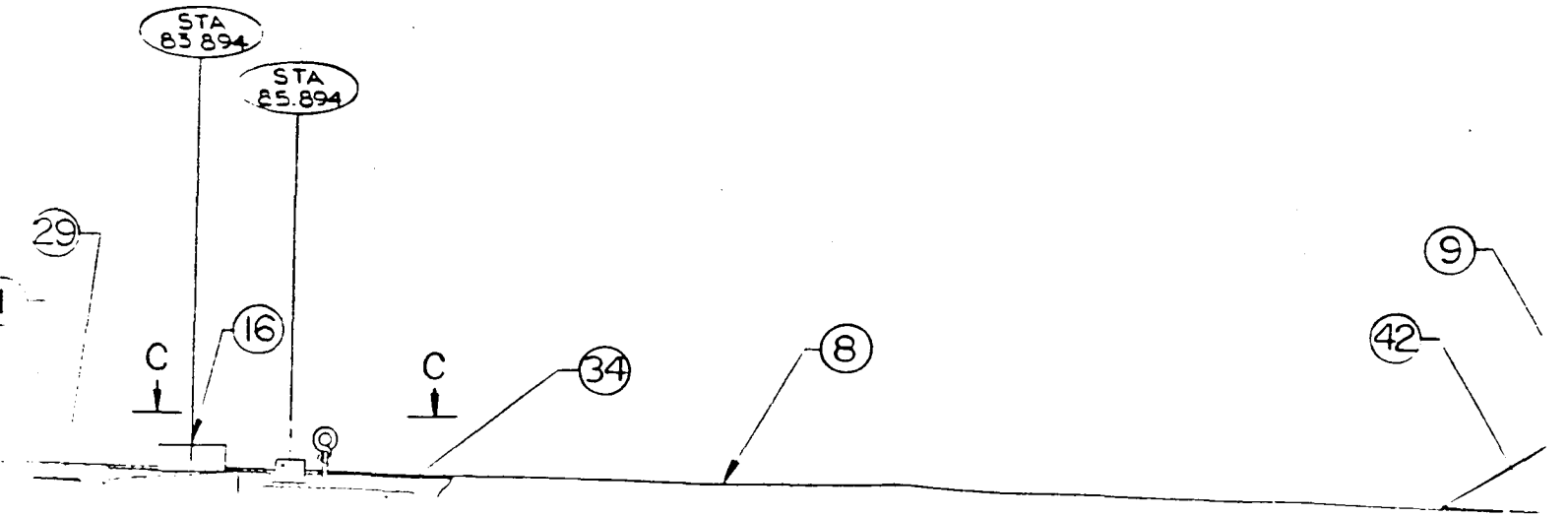
STA
83.894
STA
85.894
29
16
C
C
34
8
9
42

SLED, CHUTE EVALUATION TEST VARIATIONS

DWG ISS.		TEST NO.
1		212-1

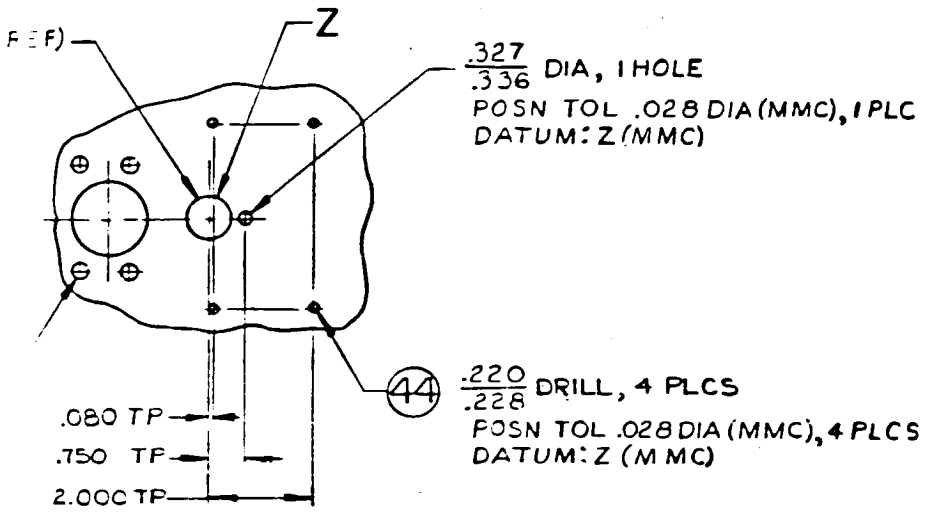

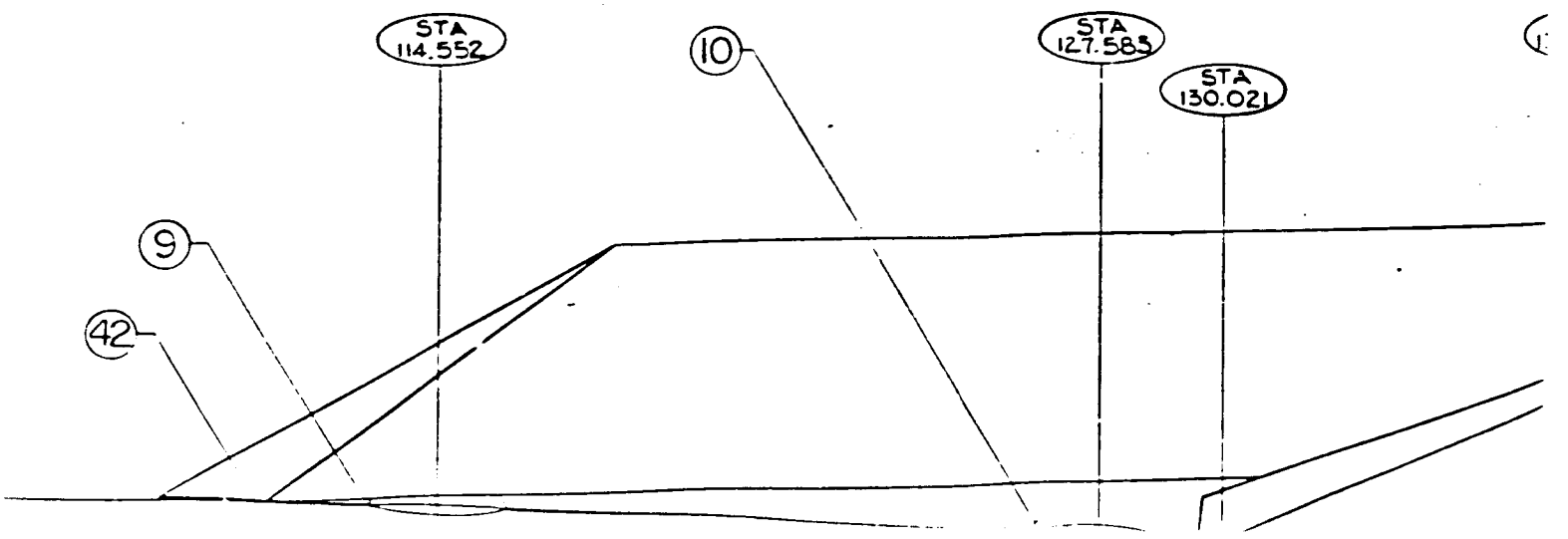

1. FOR ADDITIONAL INFORMATION PERTAINING TO FIELD TEST EQUIPMENT, SEE DRAWING NUMBER N59546.

2. ITEM 28 (PARACHUTE) SPECIALLY PACKED TO ACCOMODATE ITEM 27 (LUG DESIGN NO. 3).

		BASSINGER, R. DORNEMAN, E.	4412-5	7-6-64	

D

C

B

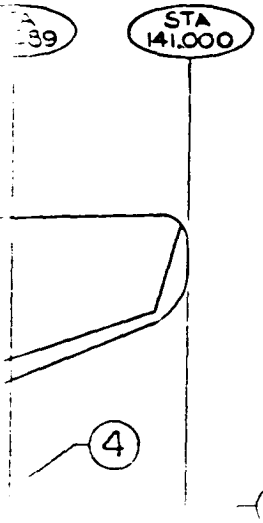

						49
						48
5	AN509-10R12	SCREW, MACH 100° CSK HD				47
5	AN363-1032	NUT, SELF LOCK				46
						45
4	MS35225-44	SCREW, MACH, PAN HD				44
6	MS35193-72	SCREW, MACH 82° CSK HD				43
32	NAS1216-4-8	SCREW, PAN HD. "HI-TORQUE"				42
4	MS35456-23	SCREW, CAP, SOC HD				41
4	MS35192-42	SCREW, MACHINE 82° CSK HD				40
16	MS24665-285	PIN, COTTER				39
12	MS20392-7C67	PIN, FLAT HD				38
4	MS20392-7C57	PIN. FLAT HD				37
15	MS16997-37	SCREW, CAP, SOC HD				36
1	N60418	JUNCTION BOX, 103 (155 2)				35
1	N60473	PULLOUT ADAPTOR ASSY (103)(155 1)				34
1	N59546	TM INSTALLATION 101 (155.2)		1		33
[illegible]	[illegible]	SCREW, SPECIAL (155 1)				32

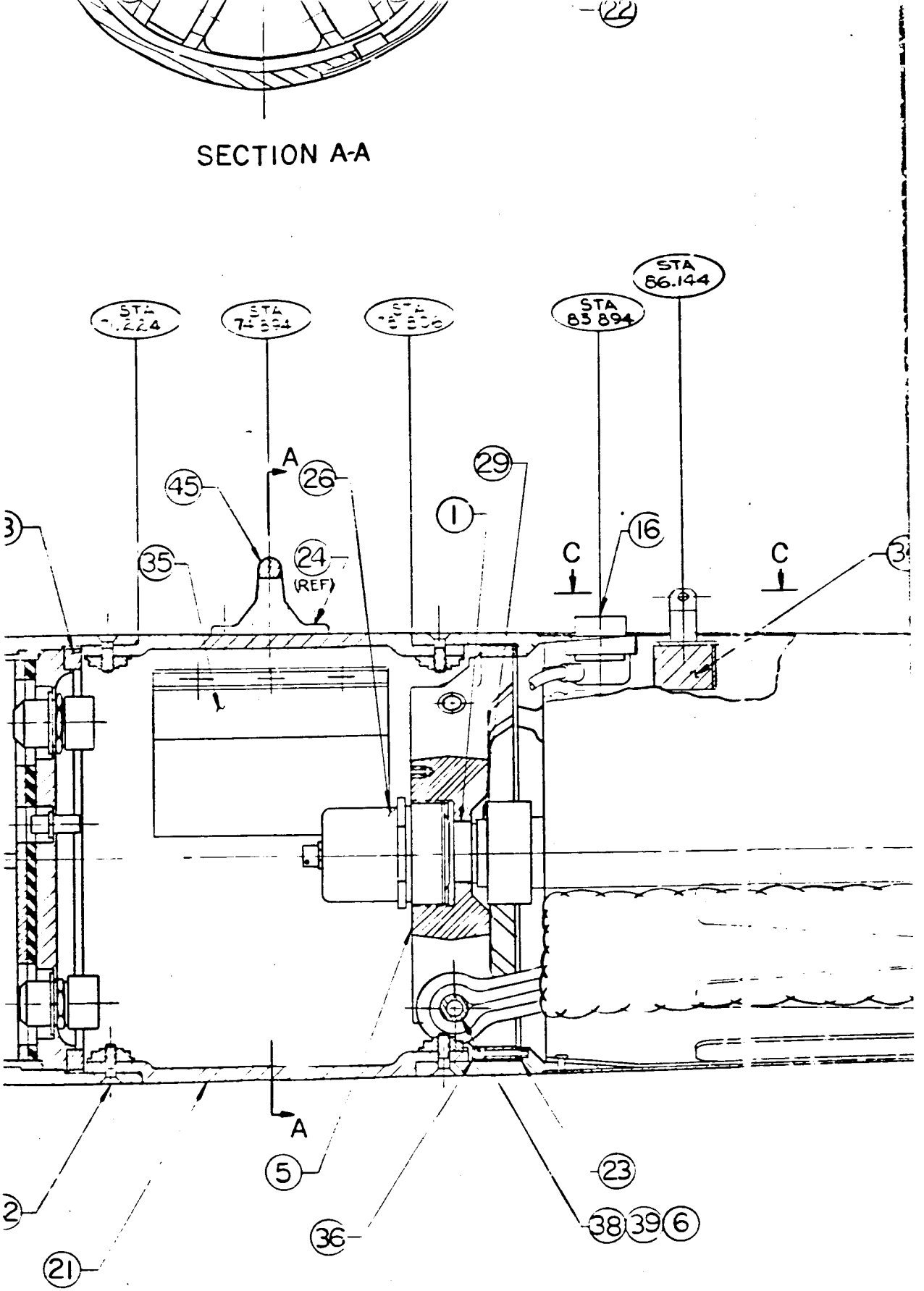
SECTION A-A
STA 86.144
STA 83 894
A
45
26
29
1
16
C
C
35
24
(REF)
A
5
23
36
38
39
6
21

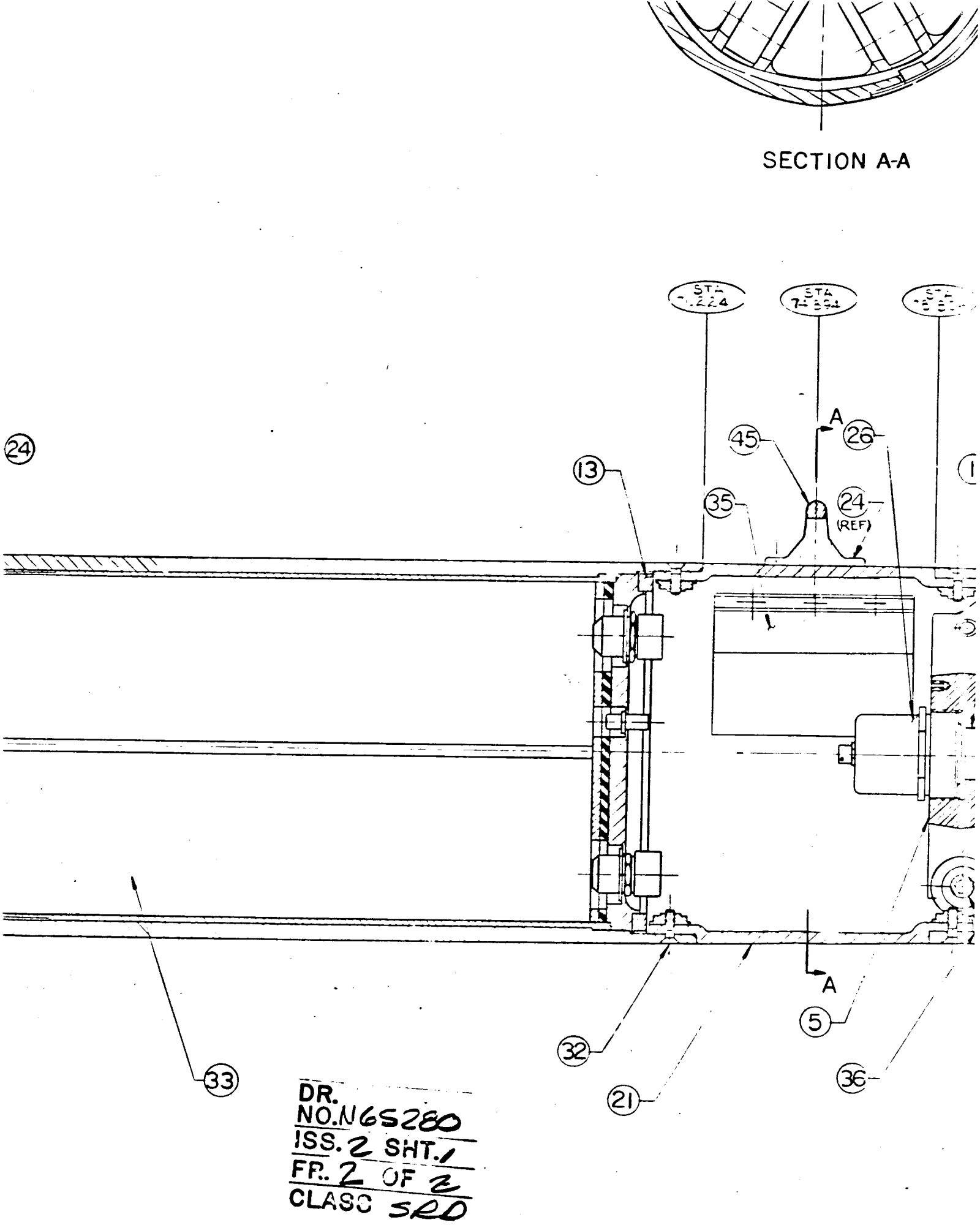

DR.
NO. N65280
ISS. 2 SHT. 1
FR. 2 OF 2
CLASS SRD

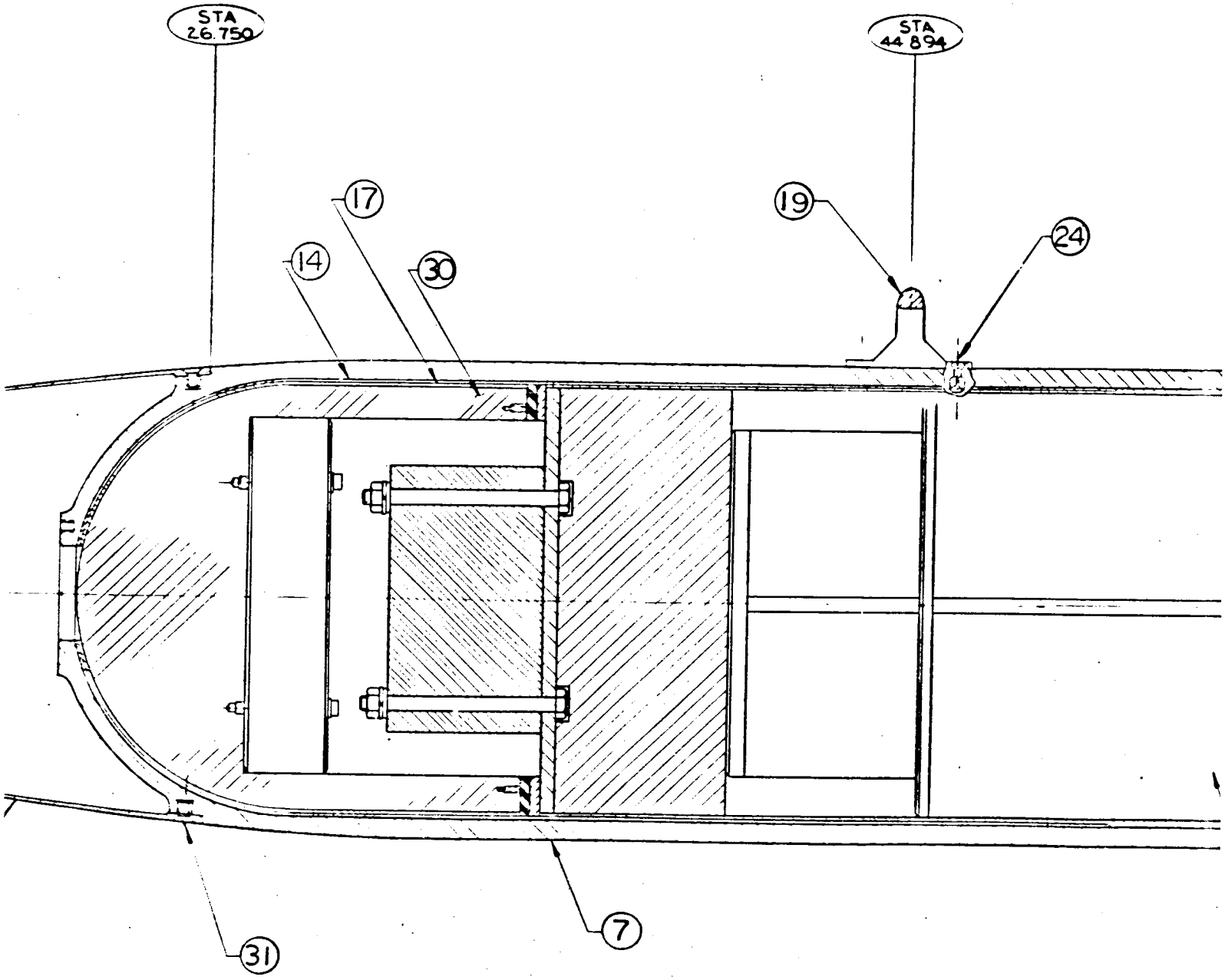

[redacted]

DWG. NO. N65280 SHEET 1 OF 1

7

6

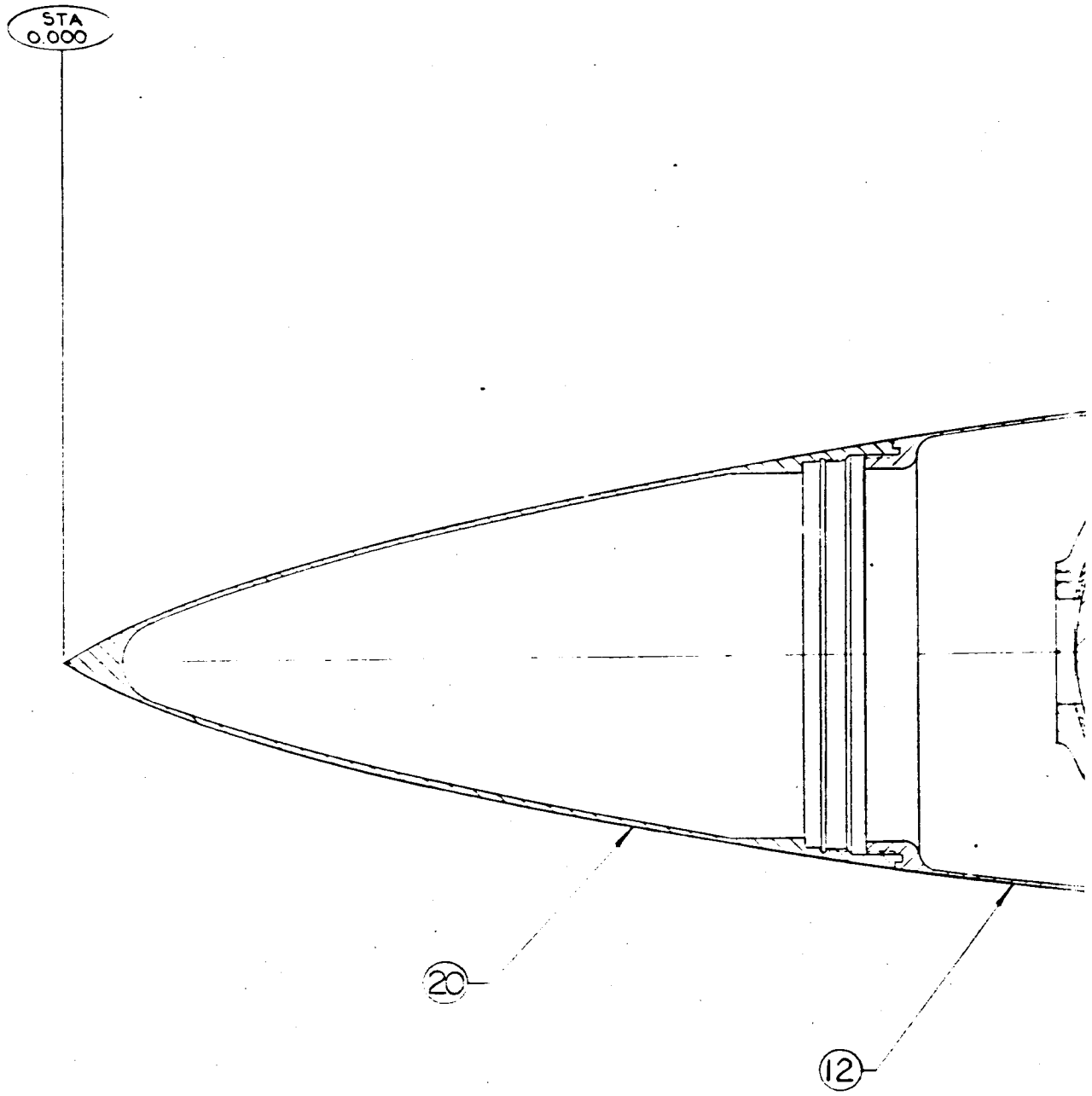

UNCLASSIFIED

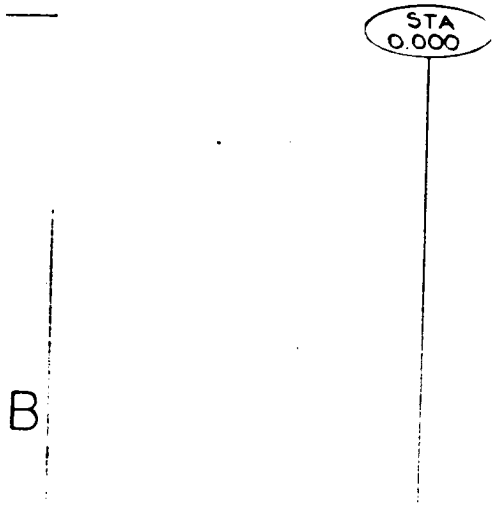
STA
0.000
B

8 7 [redacted]

UNCLASSI

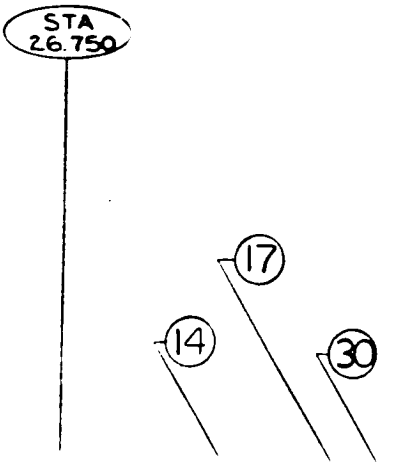

IFIED

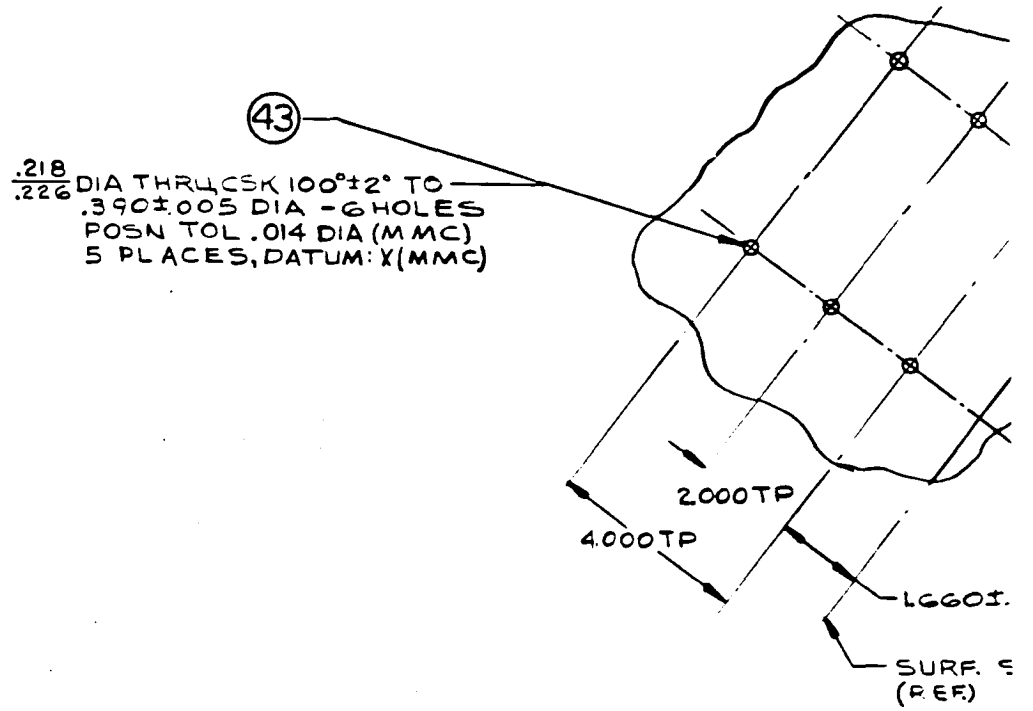
43
.218/.226 DIA THRU CSK 100°±2° TO
.390±.005 DIA - 6 HOLES
POSN TOL .014 DIA (MMC)
5 PLACES, DATUM: X (MMC)
2.000 TP
4.000 TP
1.6601.
SURF. S
(REF)

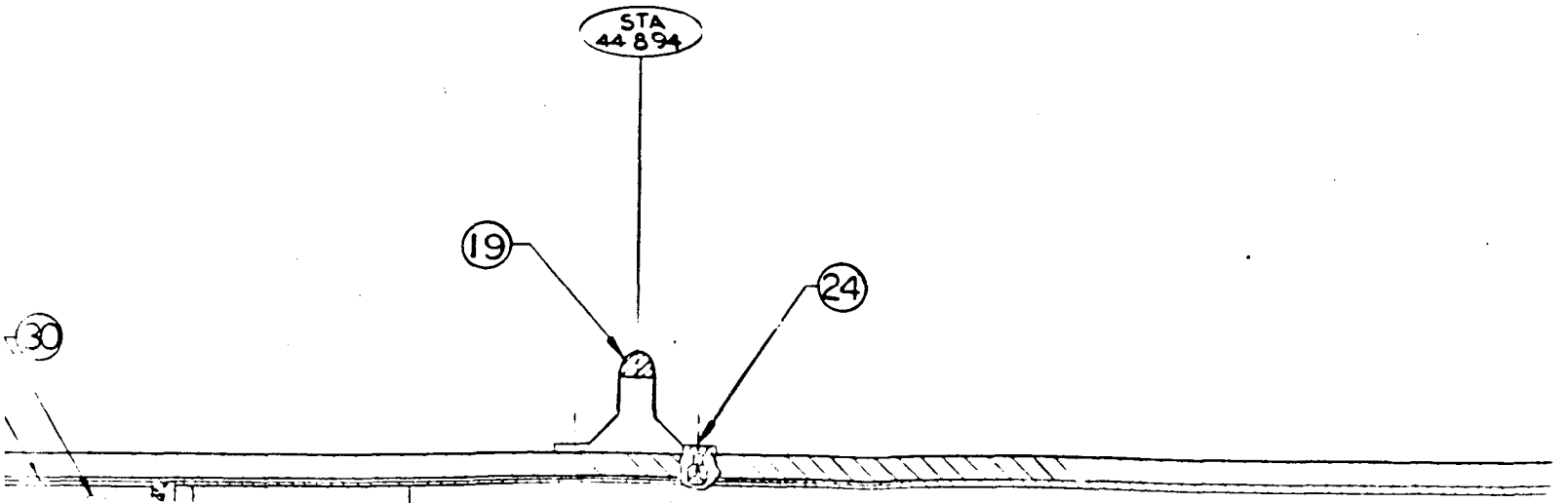
STA
44 894
19
24
30

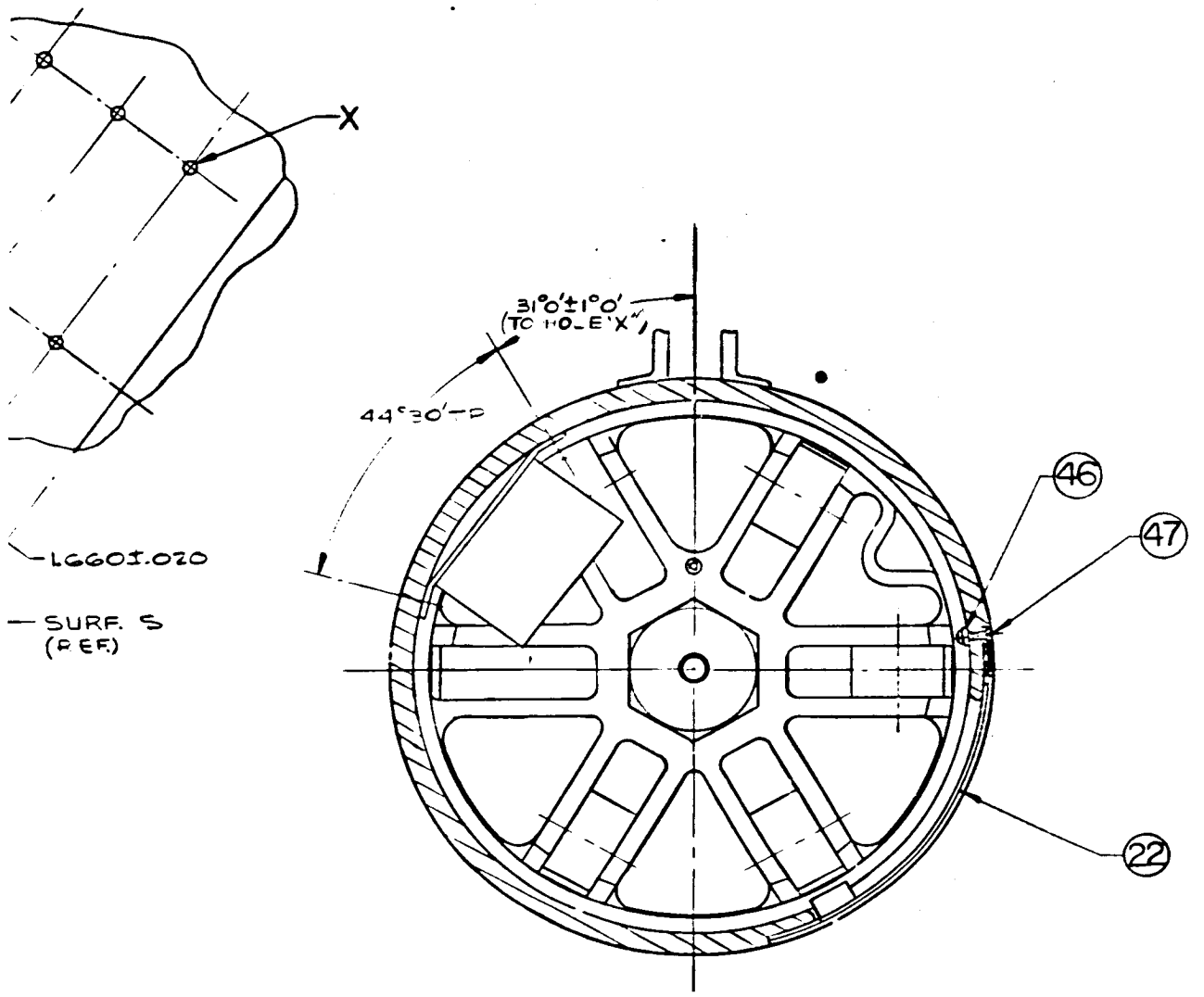
X
L660±.020
SURF. S
(REF.)
31°0'±1°0'
(TO HOLE 'X')
44°30'TP
46
47
22

SECTION A-A

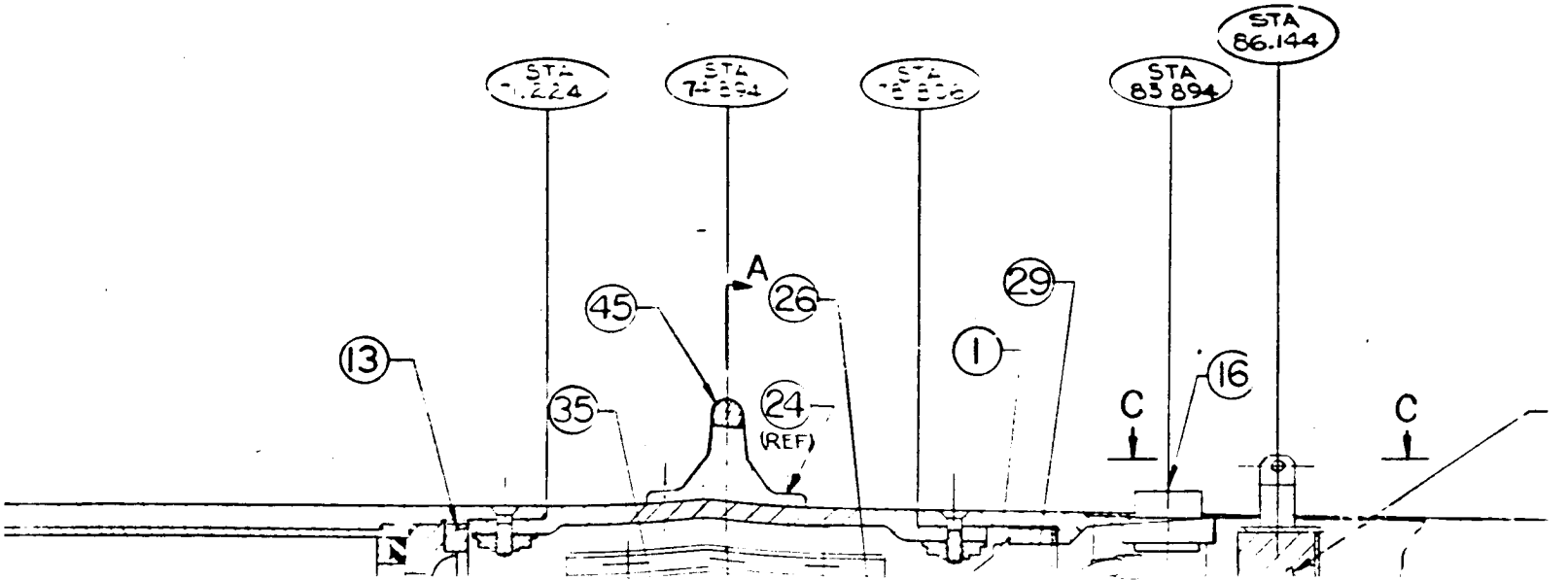
STA
86.144
STA
83.894
A
45
26
29
13
1
16
35
24
(REF)
C
C

						49
						48
5	AN509-10R12	SCREW, MACH 100° CSK HD				47
5	AN363-1032	NUT, SELF LOCK				46
1	99629-00	LUG SUSPENSION (ISS 2)				45
2	MS35225-44	SCREW, MACH, PAN HD				44
6	AN509-10R 3	SCREW, MACH, 100° CSK HD				43
32	NAS1216-4-8	SCREW, PAN HD, "HI-TORQUE"				42
4	MS35456-23	SCREW, CAP, SOC HD				41
4	MS35193-58	SCREW, MACHINE 82° CSK HD				40
10	MS24665-285	PIN, COTTER				39
6	MS20392-7G67	PIN, FLAT HD				38
4	MS20392-7G57	PIN, FLAT HD				37
18	MS16997-37	SCREW, CAP, SOC HD				36
1	N65396	JUNCTION BOX, NO. 2 (103) (ISS 1)				35
1	N77403	PULLOUT ADAPTOR ASSY NO 2 (103) (ISS 2)				34
1	N59546	TM INSTALLATION 101 (ISS. 2)		1		33
72	194092-00	SCREW, SPECIAL (ISS 1)				32
36	194091-00	SCREW, SPECIAL (ISS 1)				31
1	N52816	FORWARD BALLAST (1 FEMS 1 & 3) (ISS 5)				30
1	———	CUTTER MECHANISM (MODIFIED)				29
1	(AF)	PARACHUTE (16 FT) (MODIFIED)				28
						27
1	311784-00	XMC 1835				26
						25
16	194079-00	SCREW, MACHINE (ISS 2)				24
1	192174-00	INSULATOR, THERMAL (ISS 2)				23
1	195303-00	DOOR, ACCESS (ISS 2)				22
1	192169-00	CASE SECTION, PREFLIGHT (ISS 3)				21
1	192148-00	CASE SECTION, NOSE (ISS 2)				20
1	194059-00	LUG, SUSPENSION (ISS 5)				19
1	192125-00	DEPLOYMENT PLATE (MACHINED) (ISS 3)				18
1	192114-00	SPACER (ISS 3)				17
1	186923-00	CABLE ASSY (P/O) (MODIFIED)				16
1	186753-00	CAP AND BOLT, REAR (ISS 3)				15
1	186774-00	SLEEVE (ISS 3)				14
1	186733-00	RING, EXTERNALL THREADED (ISS 3)				13
1	186735-00	CASE EXTENSION, NOSE (ISS 2)				12
4	186730-00	FIN (ISS 3)				11
4	180397-00	COVER AND SCREW, AFT (ISS 2)				10
4	180396-00	COVER AND SCREW, FWD (ISS 2)				9
1	180391-00	CASE SECTION, REAR (ISS 5)				8
1	180388-00	CASE SECTION, CENTER (ISS 6)				7
6	180380-00	ROLLER				6
1	198021-00	SUPPORT, SUSPENSION LINE (ISS 3)				5
1	180370-00	CASE EXTENSION, REAR (ISS 3)				4
8	180364-00	PIN, SPEAR (ISS 1)				3
1	180363-00	TUBE-PLUG (ISS 2)				2
1	180361-00	TUBE ALUMINUM-INSIDE (ISS 3)				1
NO.	IDENTIFICATION			NOTE		ITEM

LIST OF MATERIAL

[redacted]

PART CLASSIFICATION: SRD

SHEET 1 ISSUE 2

SHEET INDEX

CLASSIFICATION CATEGORY: [redacted]

TITLE: TX-61 SLED, CHUTE EVALUATION

FIRST APPLICATION

SIZE: J

MFG AGENCY APPROVALS

MFG AGENCY NO.

DWG NO. N65280

SCALE 1/2 DOC REF SIM SHEET 1 OF 1

GROUP 1 - EXCLUDED FROM AUTOMATIC DOWNGRADING AND DECLASSIFICATION

[redacted]

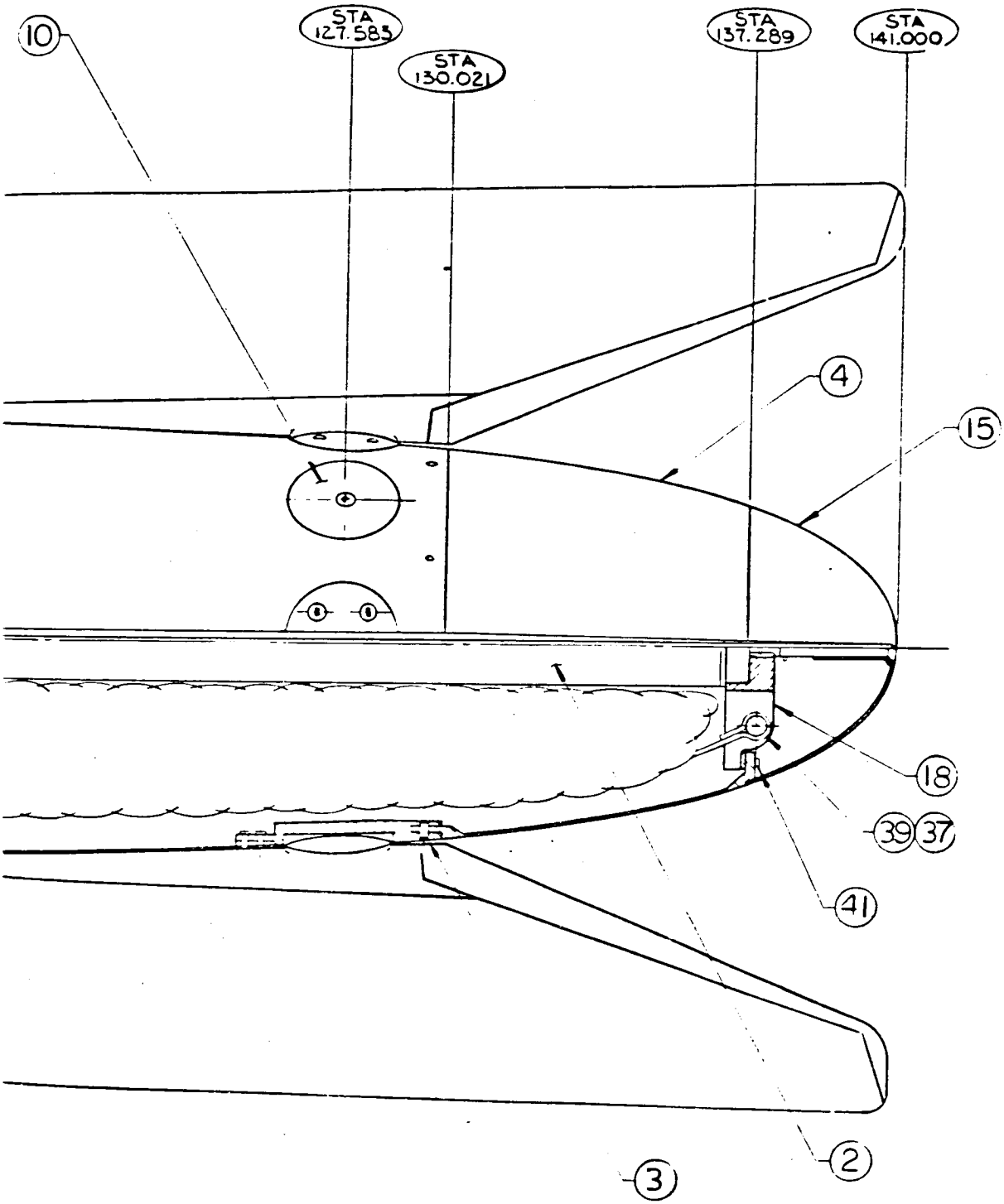

5	AN509-10R12	SC
5	AN363-1032	N
1	199627-00	LU
2	MS35225-44	SC
6	AN509-10R 3	SC
32	NAS1216-4-8	SC
4	MS35456-23	SC
2	MS35193-5B	SC
10	MS24665-283	PIN
6	MS20392-7667	PIN
4	MS20392-7C57	PIN
15	MS16997-37	SC
1	N65396	JU
1	N77405	PU
1	N59546	TM
72	194092-00	SC
36	194091-00	SC
1	N52816	FOR
1	—	CU
1	(AF)	PA
1	311784-00	XN
16	194079-00	SC
1	192174-00	INS
1	195303-00	DO
1	192165-00	CA
1	192148-00	CA
1	194059-00	LU
1	192125-00	DE
1	192114-00	SPA
1	88923-00	CA
1	186775-00	CA
1	186774-00	SLE
1	186733-00	RIN
1	186735-00	CA
4	186730-00	FIT
4	180397-00	COV
4	180396-00	COV
1	180391-00	CA
1	180385-00	CA
6	180380-00	RO
1	198021-00	SU
1	180370-00	CA
8	180364-00	PIN
1	180363-00	TU
1	180361-00	TUB

[redacted]

CLASSIFICATION CATEGORY

[redacted]

CLASSIFIED

[redacted] DWG. NO. N65280 SHEET 1 OF 1 FRAME 1 OF 2

2

GROUP 1 – EXCLUDED FROM AUTOMATIC DOWNGRADING AND DECLASSIFICATION

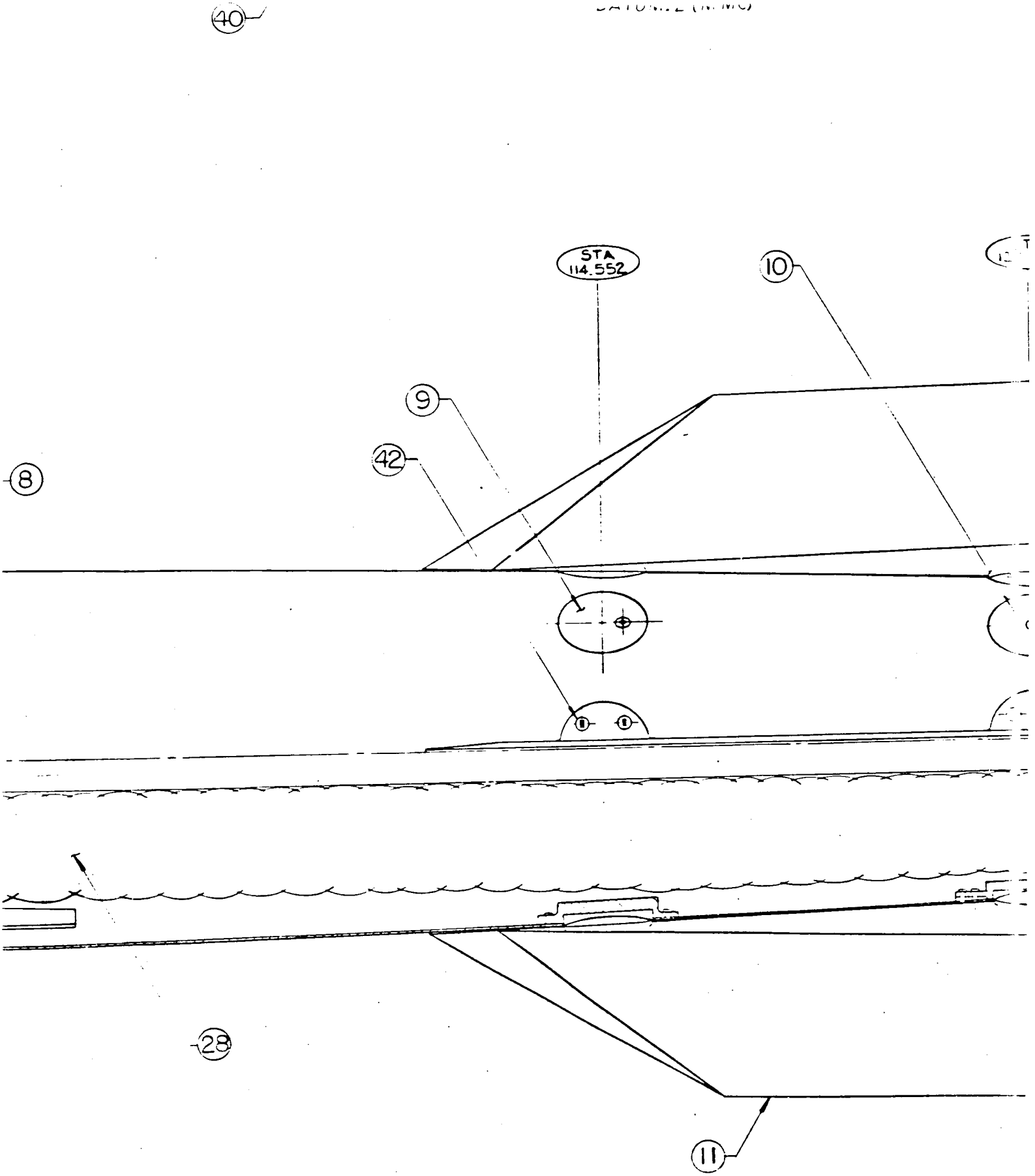

[redacted] N6525

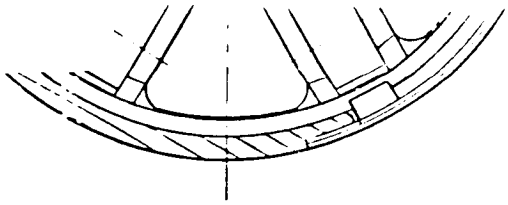

SECTION A-A

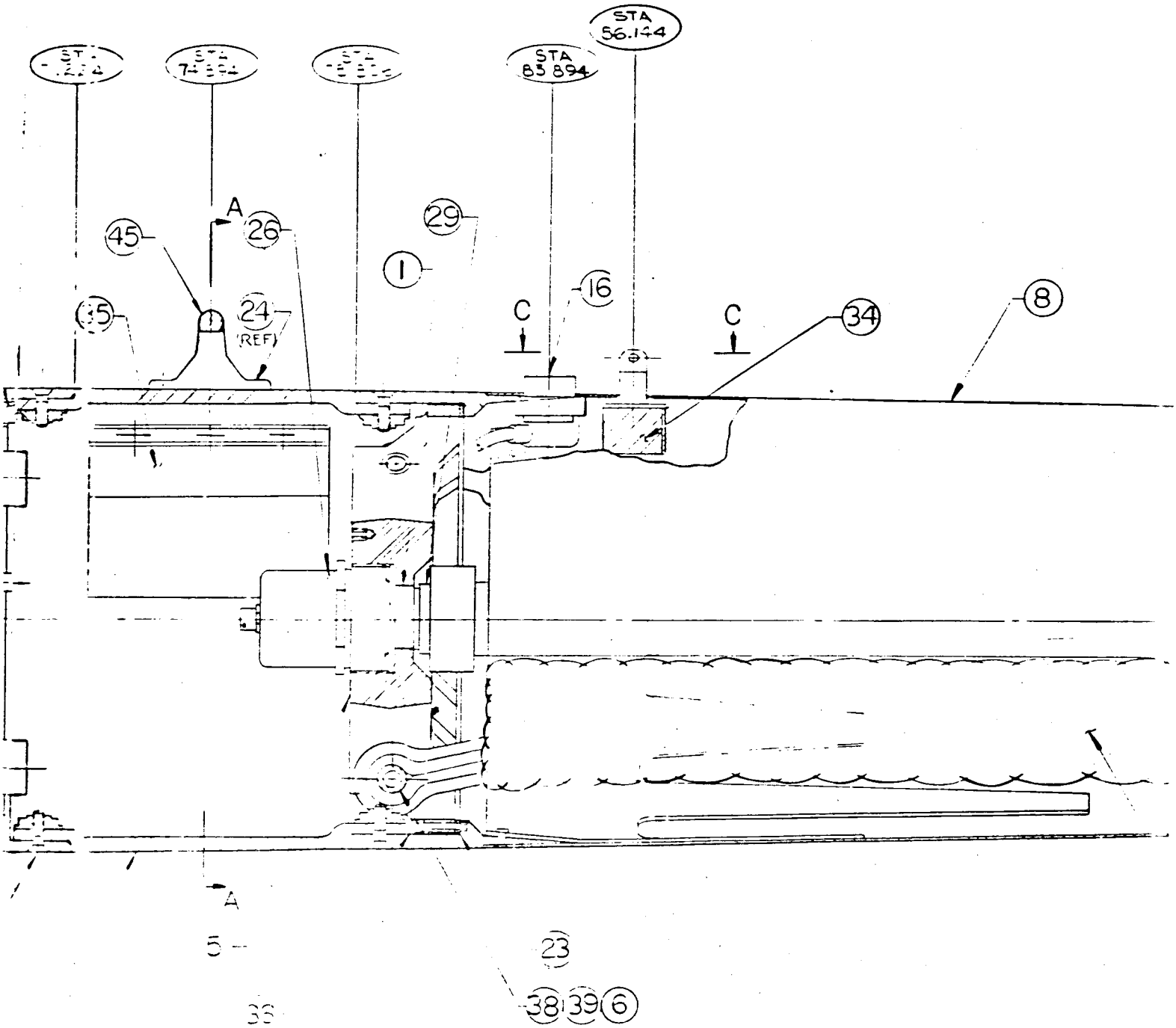

UNCLASSIFIED

SLED, CH'UTE

DWG ISS.	
1	
2	

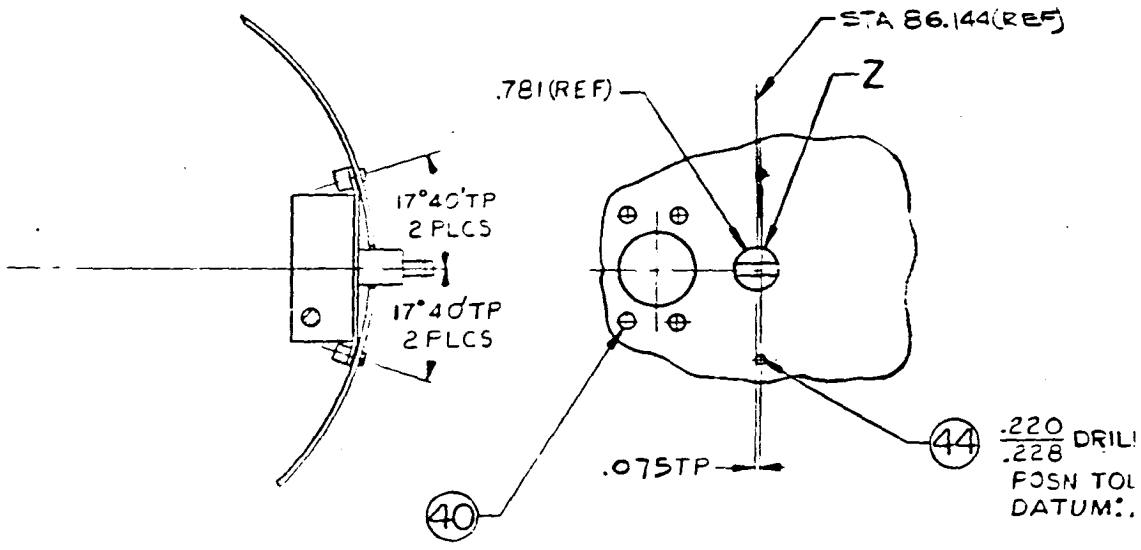

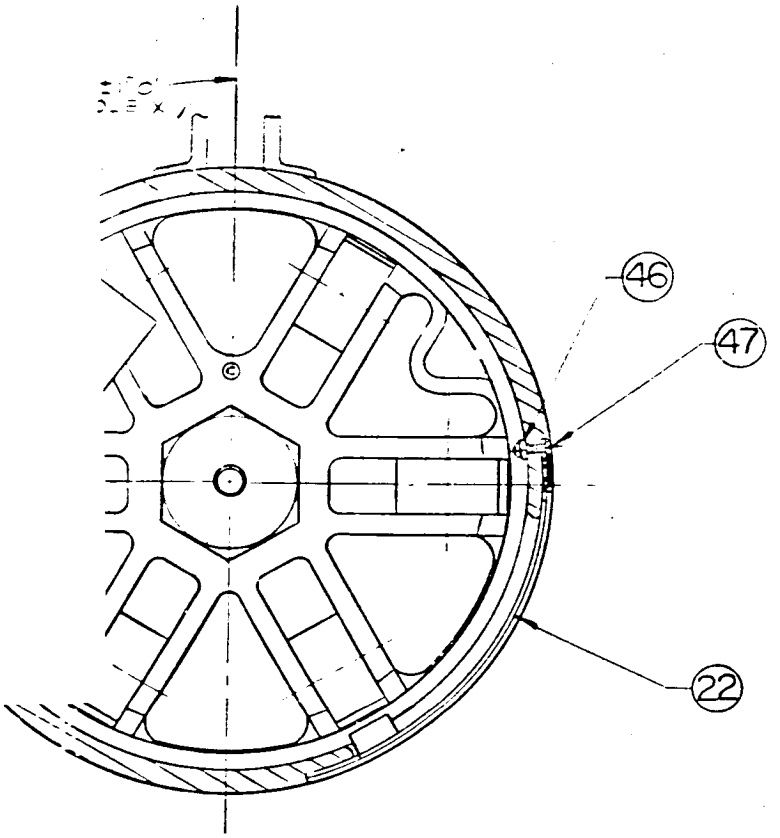

SECTION A-A

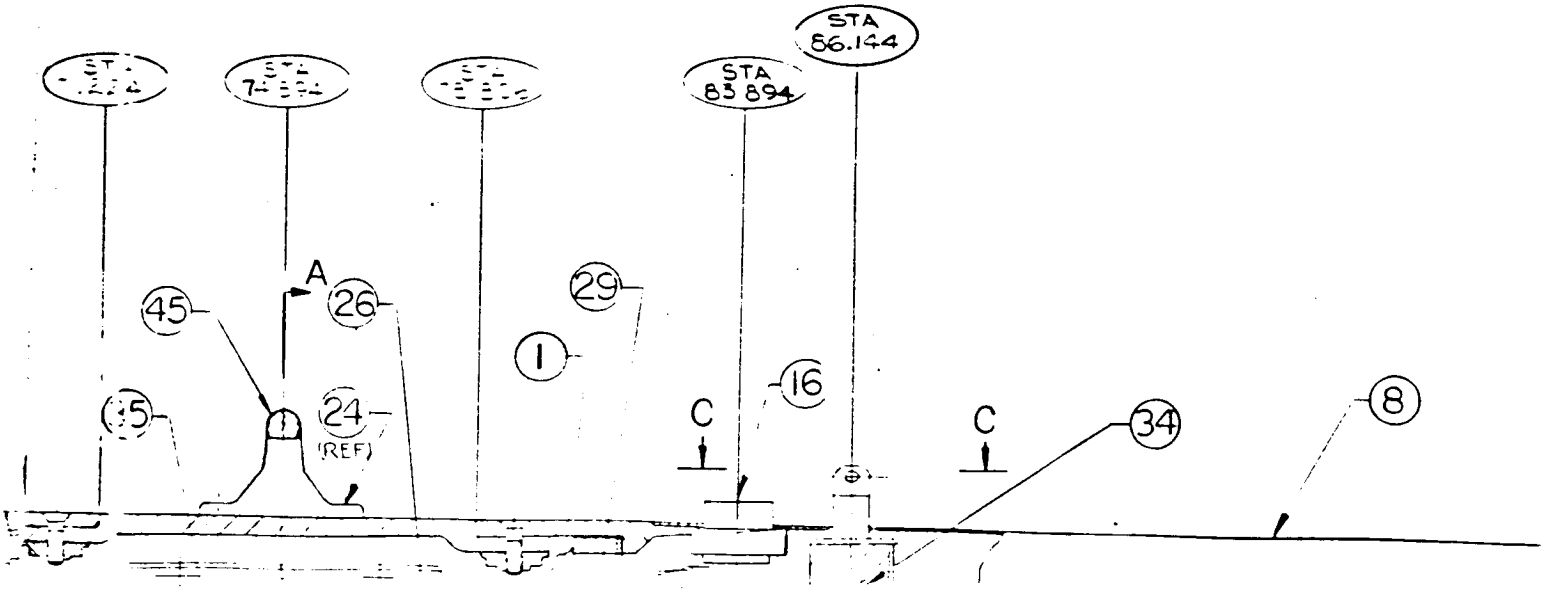

SLED, CH'JTE EVALUATION TEST VARIATIONS

DWG ISS.		TEST NO.
1		212-1
2		212-2

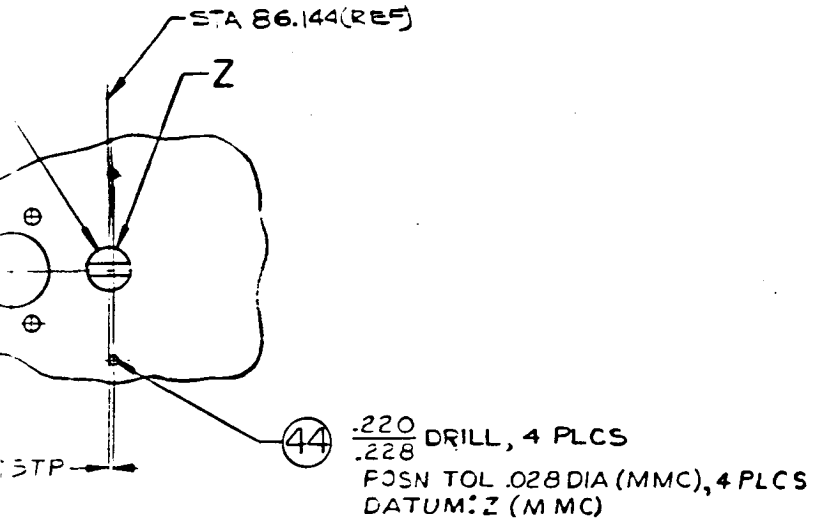

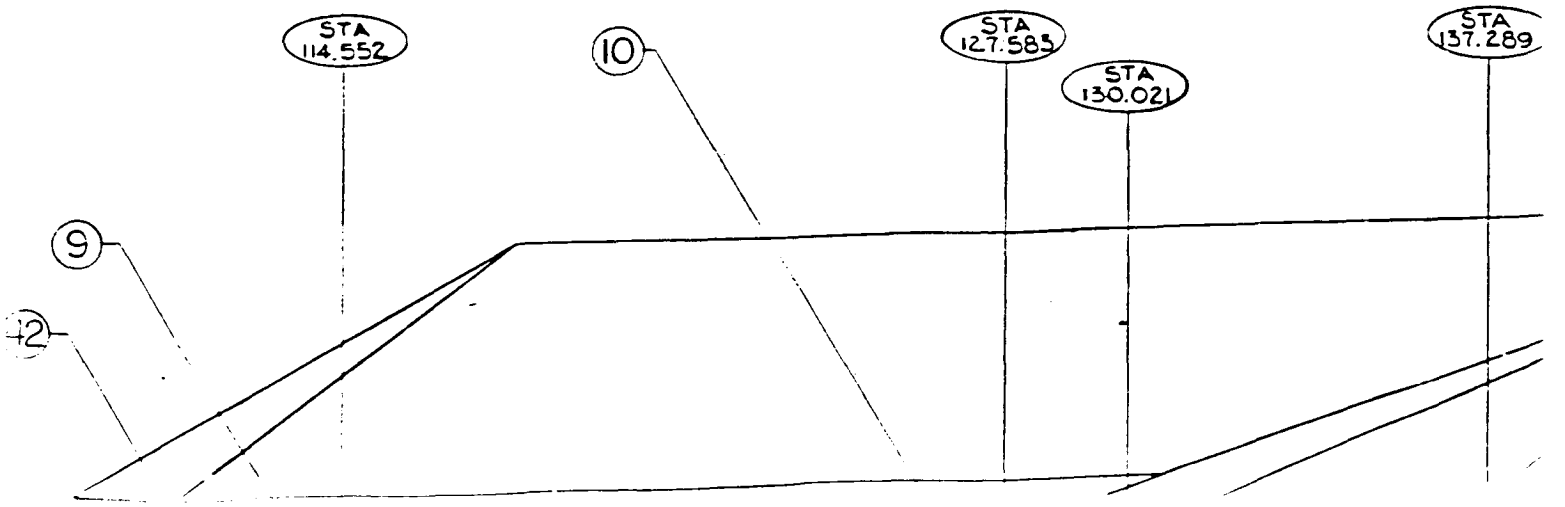

NOTES

1. FOR ADDITIONAL INFORMATION PERTAINING TO FIELD TEST EQUIPMENT, SEE DRAWING NUMBER N59546.

1		BASSINGER, R. DORNEMAN, E. 4412-5	7-6-64		
2		ADDED: 212-2 DESIGNATION AND ITEM 45 DELETED: ITEM 27 AND NOTE 2 CHANGED: ITEM 5 WAS 180372-00; ITEM 19 WAS 194059-00; ITEM 25 WAS 186792-00; ITEM 34 WAS N60473; ITEM 35 WAS N60418; ITEM 38 WAS 12 REQ.; ITEM 39 WAS 16 REQ; ITEM 40 WAS MS35192-42, ITEM 43 WAS MS35193-72. MAYER CC 2212-5	2-15-65		

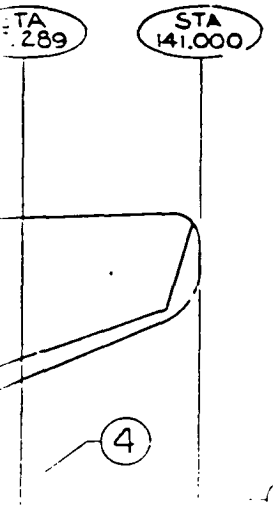

						49
						48
5	AN509-10R12	SCREW, MACH 100°CSK HD				47
5	AN363-1032	NUT, SELF LOCK				46
1	199627-00	LUG SUSPENSION (ISS 2)				45
2	MS35225-44	SCREW, MACH, PAN HD				44
6	AN509-10R13	SCREW, MACH, 100° CSK HD				43
32	NAS1216-4-8	SCREW, FAN HD, "HI-TORQUE"				42
4	MS35456-23	SCREW, CAP, SOC HD				41
2	MS35193-55	SCREW, MACHINE 82 CSK HD				40
10	MS24665-283	PIN, COTTER				39
6	MS20392-7667	PIN, FLAT HD				38
4	MS20392-7657	PIN, FLAT HD				37
18	MS16997-37	SCREW, CAP, SOC HD				36
1	N65396	JUNCTION BOX, NO 2 (10E)(ISS 1)				35
1	N77403	PULL OUT ADAPTOR ASSY NO 2 (10E) (ISS 2)				34
1	N59546	TM INSTALLATION 101 (ISS. 2)		1		33

Figure 3

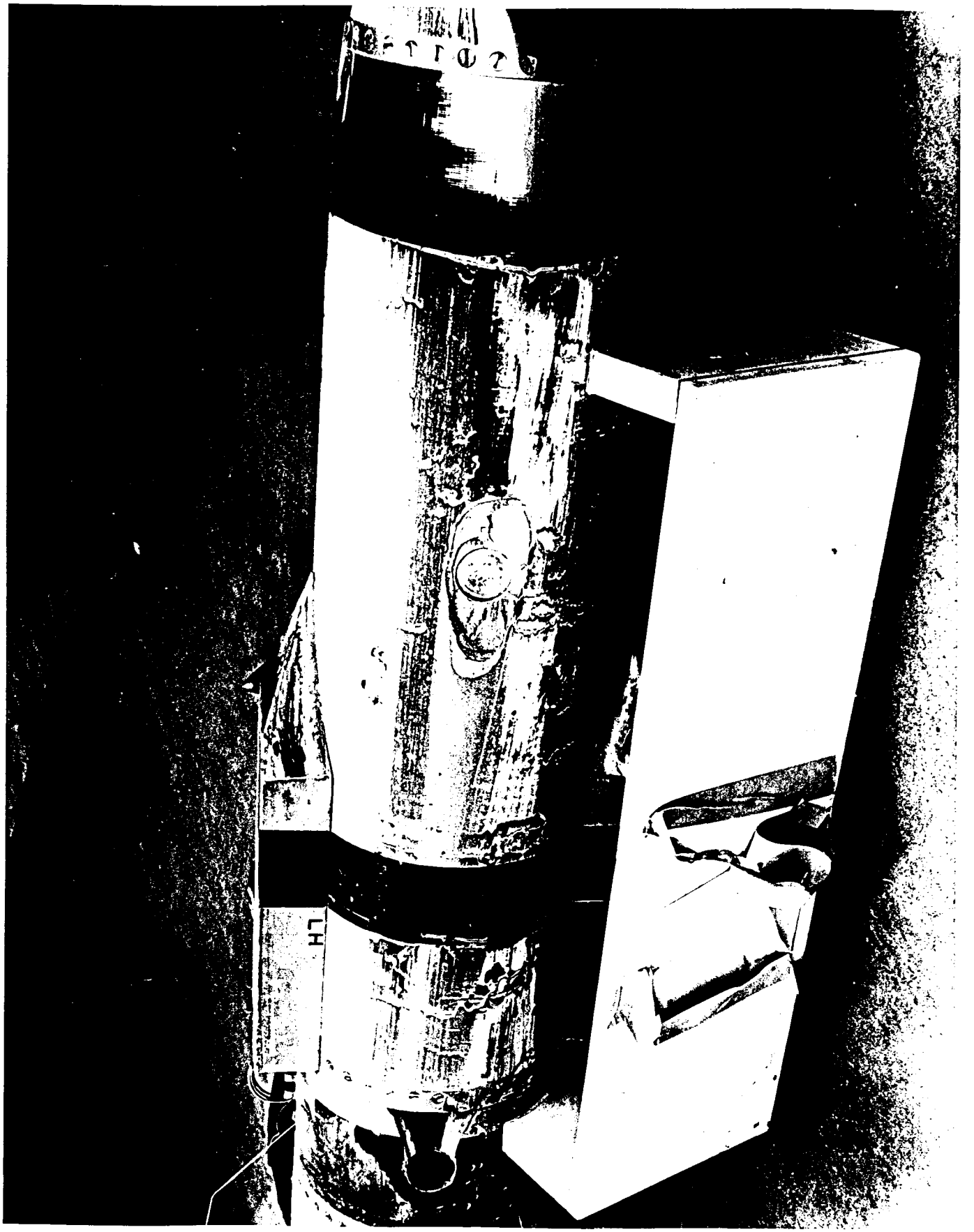

Figure 4

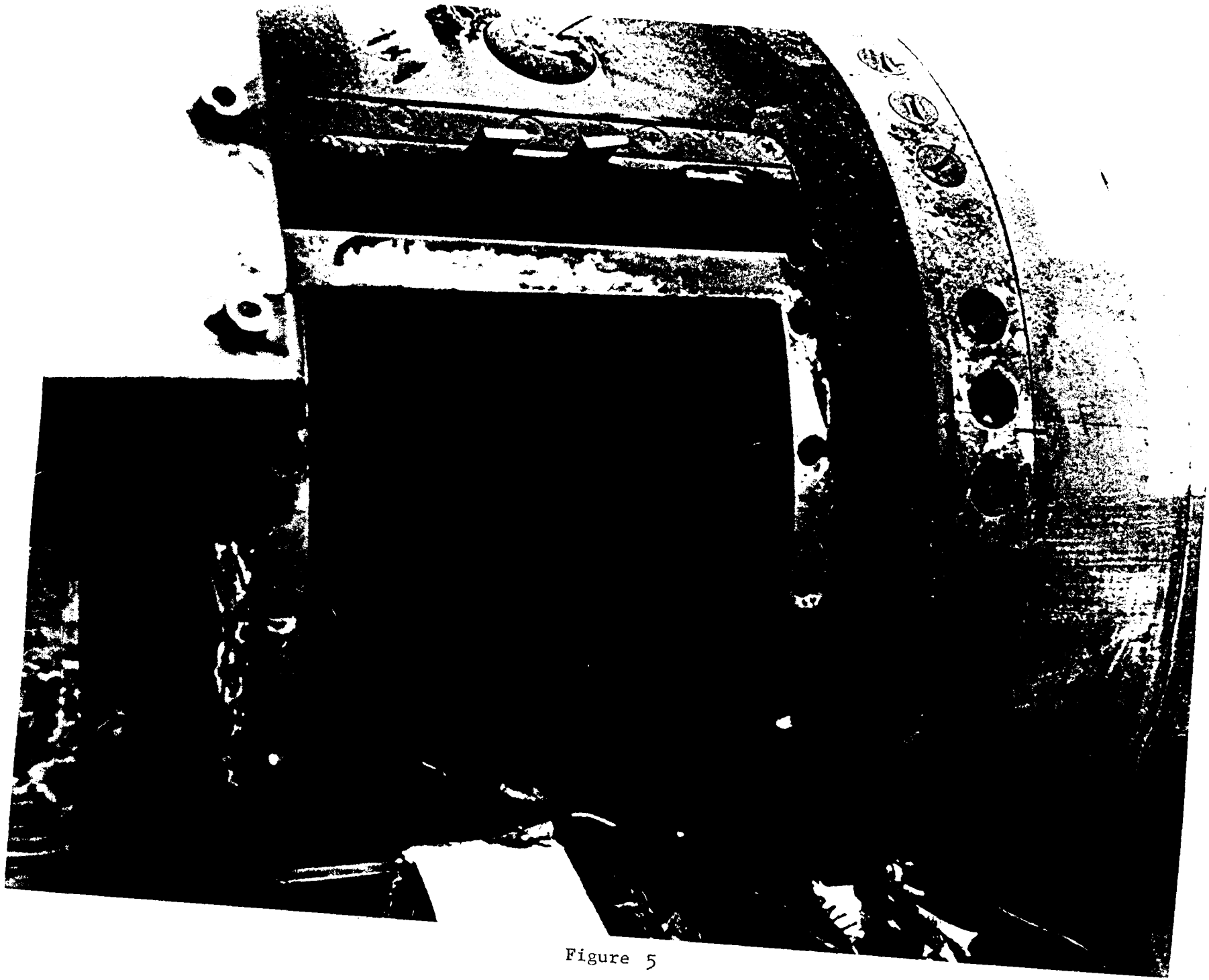

Figure 5

UNCLASSIFIED

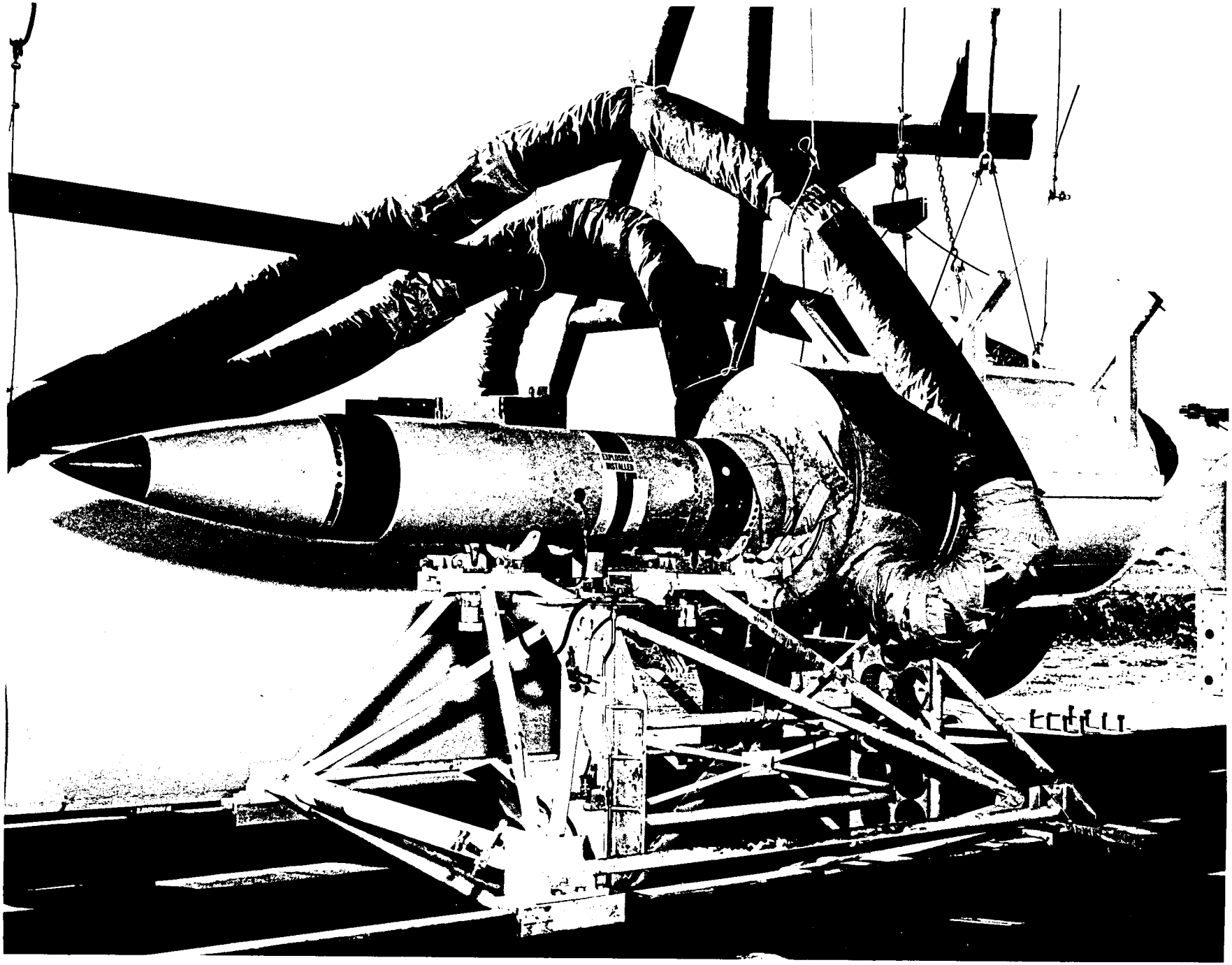

Figure 6

[redacted]

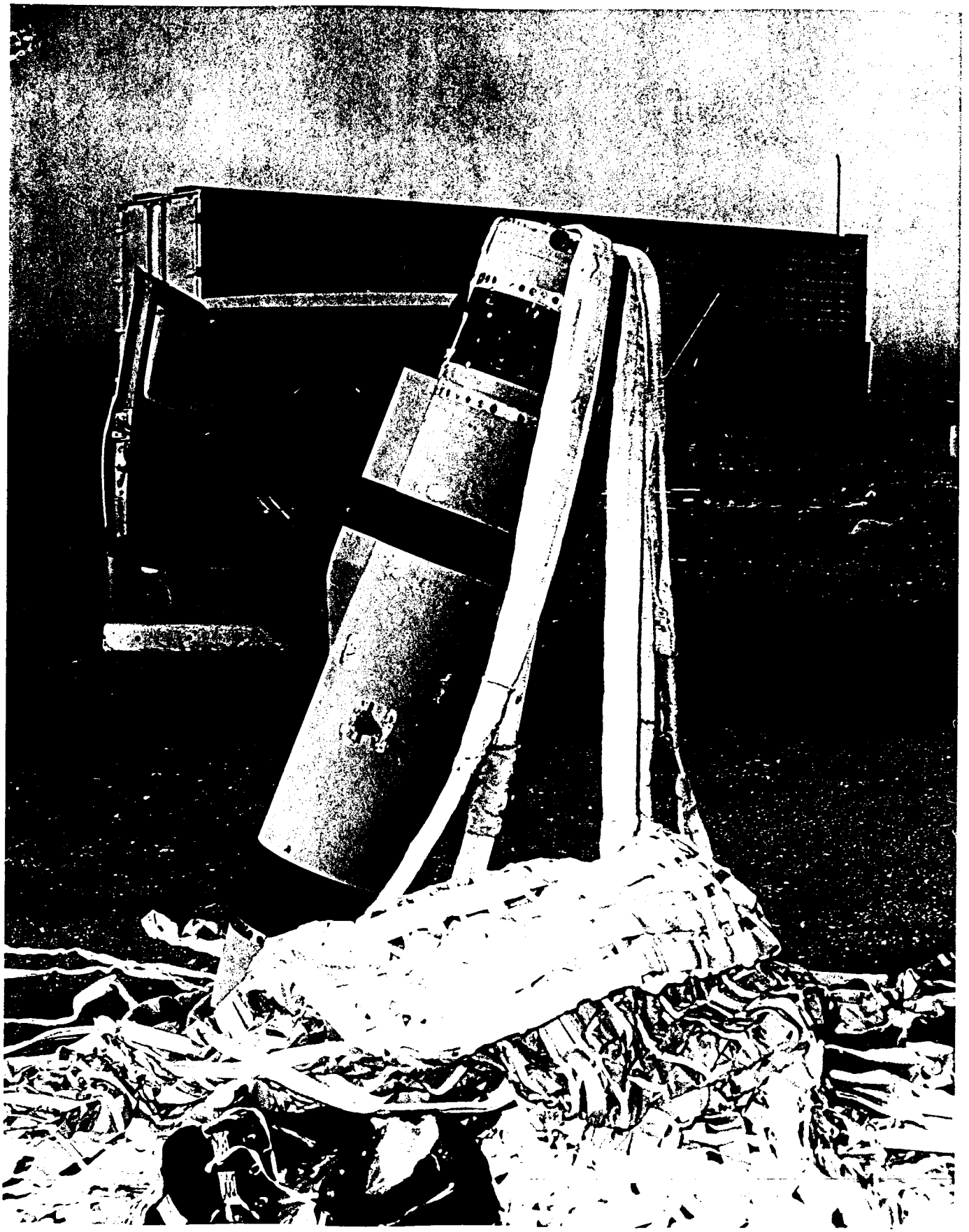

Figure 7

[redacted]

Figure 8

[redacted]

Figure 9

[redacted]