[redacted] UNCLASSIFIED

SANDIA SYSTEMATIC DECLASSIFICATION REVIEW
DOWNGRADING OR DECLASSIFICATION STAMP

| | |
|---|---|
| CLASSIFICATION CHANGED TO: U | AUTHORITY: R.B. Craner |
| Emilda Silph 8/11/97 | |
| PERSON CHANGING MARKING & DATE | RECORD ID: 97SN3161 |
| Carmella Gallegos 8/12/97 | |
| PERSON VERIFYING MARKING & DATE | DATED: 7/29/97 |

SANDIA SYSTEMATIC DECLASSIFICATION REVIEW

| | |
|---|---|
| 1st Review Date: 7/28/97 | Determination (Circle Numbers) |
| Authority: AEC ADD | 1 Classification Retained |
| Name: R.B. Craner | 2 Classification Changed to: UNCL |
| | 3 Contains No DOE Classified Information |
| 2nd Review Date: 7/29/97 | 4 Coordinate With: |
| Authority: ADD | 5 Contains UCAI? |
| Name: W Layne | 6 Comments: UNCLASSIFIED |

SC-DR-64-647

# REPORT ON TX-61 WEAPON TESTS 100-1, 100-2 AND 100-3

(Title Unclassified)


R. D. Lindsey and R. R. Precit, 1513
Sandia Laboratory, Albuquerque, New Mexico


~~AEC ATOMIC WEAPON DATA SIGMA 3~~
RS 3410/85

INVENTORIED
MAR 1 1966
3428-3

May 1964

INVENTORIED
MAR 8 1965
3427-1

Approved by: James W. Jones
J. W. Jones, 1510

## ABSTRACT (U)


This report supplements SCDR214-63, Test Plan for TX-61 Weapon Tests 100-1 and 100-2, with the results of Tests 100-1 and 100-2 and describes the weapon configuration and test results for Test 100-3. These three preliminary tests were made to determine the aerodynamic stability of the proposed TX-61 design at high release velocities and altitudes.


[redacted]

[redacted]

[redacted]

[redacted]

UNCLASSIFIED,



[redacted]

DISTRIBUTION:

1/22A - Hq. FC/DASA, Attn: Adj. Gen.,
For: Major R. K. Wright, FC/DD-3
2/22A - J. M. Wiesen, 1440
3-6/22A - C. L. Carpenter, 1513
7/22A - S. A. Moore, 1540
8/22A - A. F. Cone, 2110
9/22A - W. V. Hereford, 7215
10/22A - W. T. Moffat, 7220
11/22A - G. E. Hansche, 7240
12/22A - A. Y. Pope, 7420, Attn: W. H. Curry, 7424
13/22A - B. R. Allen, 3421
14/22A - M. G. Randle, 3428-1, Bldg. 880
15/22A - M. G. Randle, 3428-1, Bldg. 836
16/22A - E. A. Paxton, 8232-1
17/22A - W. F. Carstens, 3410, Attn: J. M. Zanetti, 3412
18-22/22A - R. C. Smelich, 3427-3

[redacted]

This [redacted] art, wit[redacted] ating d[redacted]

TABLE OF CONTENTS


| | Page |
|---|---|
| Introduction | 5 |
| Test Objectives | 5 |
| Summary | 5 |
| Description of Test Vehicles | 6 |
| Instrumentation | 6 |
| Test Results | 7 |

Frontispiece

# REPORT ON TX-61 WEAPON TESTS 100-1, 100-2, AND 100-3

## Introduction

Weapon Tests 100-1 and 100-2 were freefall drops of the preliminary airdrop test program for the TX-61 weapon. Because of roll-pitch coupling encountered in Test 100-2, an additional preliminary ballistic airdrop (Test 100-3) was necessary to verify the results of either Test 100-1 or Test 100-2. Table I summarizes the test conditions for the three drops.

TABLE I

| Test No. | Date | Carrier | Release Altitude | Release Speed |
|---|---|---|---|---|
| 100-1 | 7/23/63 | F-104C | 42,667 ft msl | Mach 1.81 |
| 100-2 | 7/29/63 | F-104C | 54,433 ft msl | Mach 1.79 |
| 100-3 | 8/26/63 | F-104C | 54,064 ft msl | Mach 1.75 |

## Test Objectives

The purpose of these drops was to obtain early ballistic, aerodynamic, dynamic stability, and aircraft separation data.

## Summary

Tests 100-2 and 100-3 indicate that at release altitudes of approximately 55,000 feet and speeds of Mach 1.8, roll-pitch coupling is encountered, resulting in an unstable bomb. Roll-pitch coupling occurs when the roll frequency approaches the natural pitch frequency of the weapon (Figure 3). On high-altitude high-speed drops, the low air density decreases the restoring effect of the fins (thereby decreasing the pitch frequency), and the high speed increases the roll frequency.

## Description of Test Vehicles

A basic description of the test vehicles for Tests 100-1 and 100-2 is given in SCDR 214-63. The configuration used in 100-3 was very similar to that used in 100-1; the same type of preliminary center case and ballistic afterbody was used (Figure 1). The nose was different in that there were no pressure ports. Two XMC1913 velocity sensors were located at the aft end of the center case to obtain data on switch closure time and differential pressure. An electrical system was included to provide initiation power to the velocity sensors at release (Figure 2). Two transverse kick rockets were located between the fins as in Tests 100-1 and 100-2.

Table II summarizes the physical characteristics of the three test units.

TABLE II

| | 100-1 | 100-2 | 100-3 |
|---|---|---|---|
| Length (in.) | 142.18 | 144.44 | 142.18 |
| Weight (lb) | 581 | 582 | 600 |
| C. G. (Station) | 57.40 | 59.1 | 57.12 |
| Roll MI (lb-in.$^2$) | Not obtained | Not obtained | 16,000 |
| Pitch MI (lb-in.$^2$) | 592,000 | 601,000 | 624,000 |
| Yaw MI (lb-in.$^2$) | Not obtained | Not obtained | 624,000 |

## Instrumentation

A description of the instrumentation for Tests 100-1 and 100-2 is given in SCDR 214-63.

On Test 100-3, camera coverage was obtained to provide documentary information and air-trajectory data. Telemetry information was obtained on the following characteristics:

| Information | Range |
|---|---|
| Roll gyro | Continuous |
| Yaw gyro | +45° to -130° |
| Pitch gyro | ± 85° |
| Vert. accel. | ± 20 g |
| Pressure switch | Go/no-go |
| Differential pressure | 0-15 psid |

The differential pressure was obtained by modifying one of the XMC1913's to allow direct measurement of the induced differential pressure. Switch closure on both XMC1913's was monitored.

## Test Results

### Test 100-1

The roll, pitch, and yaw gyros indicated that the unit was stable over the entire trajectory. The unit pitched down 13 degrees at release and stabilized within 4 seconds. The first kick rocket, set for 21 seconds, failed to fire. The second kick rocket, set for 42 seconds, fired at 42.3 seconds and caused a maximum pitch of 9.6 degrees and a maximum yaw of 9 degrees. The unit stabilized within about 3 seconds. A summary of trajectory data is given in Table III. Pressure data for the entire drop is summarized in Table IV.

### Test 100-2

The unit pitched down 11 degrees at release and did not completely stabilize before the first kick rocket fired at 10.8 seconds. The unit then encountered roll-pitch coupling and developed maximum oscillations of about 48 degrees from center in both pitch and yaw at 19 seconds from release. Figure 3 shows the effect of the roll and yaw frequencies on the yaw amplitude (peak swing from center) for the interval of time from 6 to 34 seconds after release. When the roll and yaw frequencies are almost equal, the amplitude of oscillation increases.

The unit stabilized from the effects of the first kick rocket at about 35 seconds, but began to wobble again at about 42 seconds and continued until the second kick rocket, which was set for 55 seconds, fired at 55.4 seconds. The unit pitched a maximum of about 17 degrees at the second kick-rocket firing and never completely stabilized before impact. A summary of trajectory data is given in Table III. Pressure data for the entire drop is summarized in Table IV.

### Test 100-3

At release the unit pitched up 3 degrees and then down 12 degrees. The unit showed a slight wobble of about ±4 degrees on pitch and yaw during the entire trajectory, possibly because the unit was not dynamically balanced.

The first kick rocket fired at 11.05 seconds and produced a maximum yaw of about 33 degrees and a pitch deviation of from 32 degrees down to 9 degrees down. The oscillations caused by

the kick rocket damped out in about 8 seconds. The second kick rocket did not fire. A summary of trajectory data is given in Table III. Pressure data on the XMC1913 was not obtained because the electrical system failed to deliver activation power to the pressure inducer. This failure occurred because of an incompatibility in cabling between the pressure inducer and the electrical system.

Figures 4 through 7 are comparative graphs of the three tests for altitude versus range (Figure 4), altitude versus time (Figure 5), speed versus time (Figure 6), and Q versus time (Figure 7).

TABLE III

Trajectory Data

| | 100-1 | 100-2 | 100-3 |
|---|---|---|---|
| Release altitude (ft msl) | 42,667 | 54,433 | 54,064 |
| Release speed (Mach) | 1.81 | 1.79 | 1.75 |
| Time of fall (sec) | 53.72 | 69.68 | 61.95 |
| Range (ft) | 68,700 | 60,005 | 74,366 |
| Trajectory length (ft) | 81,405 | 85,890 | 93,352 |
| Impact velocity (fps) | 1369 | 1313 | 1414 |
| Impact angle (deg) | 55 | 72 | 60 |
| Kick rocket No. 1 (sec) | Failed | 10.8 | 11.05 |
| Kick rocket No. 2 (sec) | 42.3 | 55.4 | Failed |
| Roll rate at impact (rps) | 0.45 | 1.3 | 0.74 |
| Max. roll rate (rps) | 0.45 (at impact) | 2.5 (at 56 sec) | 2.3 (at 13 sec) |
| Ejection velocity (fps) | 8-10 | 7.5 | 25-28 |

TABLE IV

Pressure Data

| | 100-1 | 100-2 | 100-3 |
|---|---|---|---|
| $P_m/P_a$ at Release | | | |
| Sta 0 | 4.794 | 4.057 | NOT RECORDED |
| Sta 8 | 1.581 | 1.288 | |
| Sta 16 | 1.203 | 1.822 | |
| Sta 24 | 0.999 | 1.377 | |
| Sta 33 | 0.914 | 1.032 | |
| $P_m/P_a$ at Impact | | | |
| Sta 0 | 2.418 | 1.707 | |
| Sta 8 | 1.236 | 1.192 | |
| Sta 16 | 1.095 | 1.076 | |
| Sta 24 | 0.940 | 1.002 | |
| Sta 33 | 0.855 | 0.867 | |
| Differential Pressure | | | |
| Station | 72.63 | 72.63 | 72.63 |
| psid at release | +3.25* | - | No data |
| psid at impact | +5* | +5** | No data |

*The pressure differential reached a minimum of 3.25 psid during pitchoff from the aircraft and remained above 5 psid for the entire flight.

**The differential pressure remained above 5 psid for the entire flight.

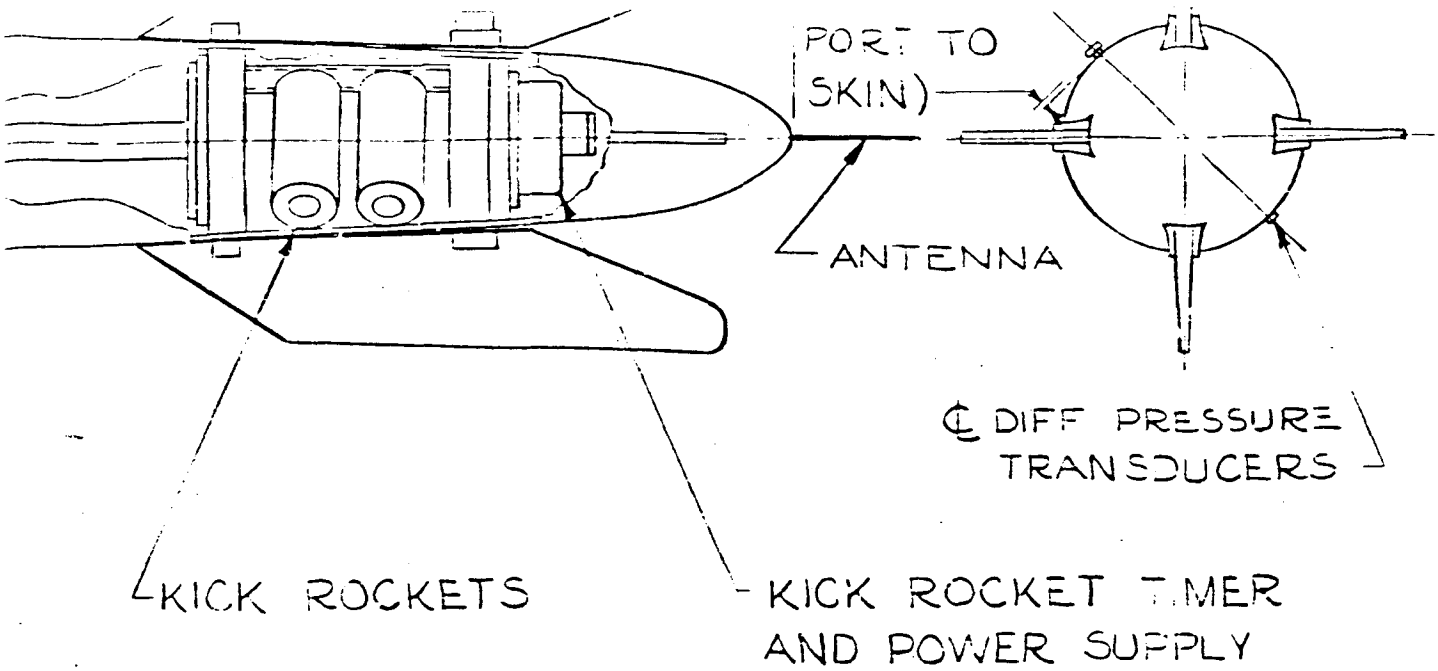


DWG. NO. N54804

| | | | |
|---|---|---|---|
| PART CLASSIFICATION: UNCLASSIFIED | SHEET 1 / ISSUE 4 | | |
| | SHEET INDEX | | |
| DATE / INITIALS | TITLE: TX-61 BALLISTIC TEST UNIT 100-2 | FIRST APPLICATION | MFG DISTR |
| | | SIZE: C | |
| MFG AGENCY APPROVALS | MFG AGENCY NO. | DWG NO. N54804 | |
| | SCALE: 1/10 / DOC. REF. SYM. | SHEET 1 OF 1 | |

CS407-C (6-62)

UNCLASSIFIED

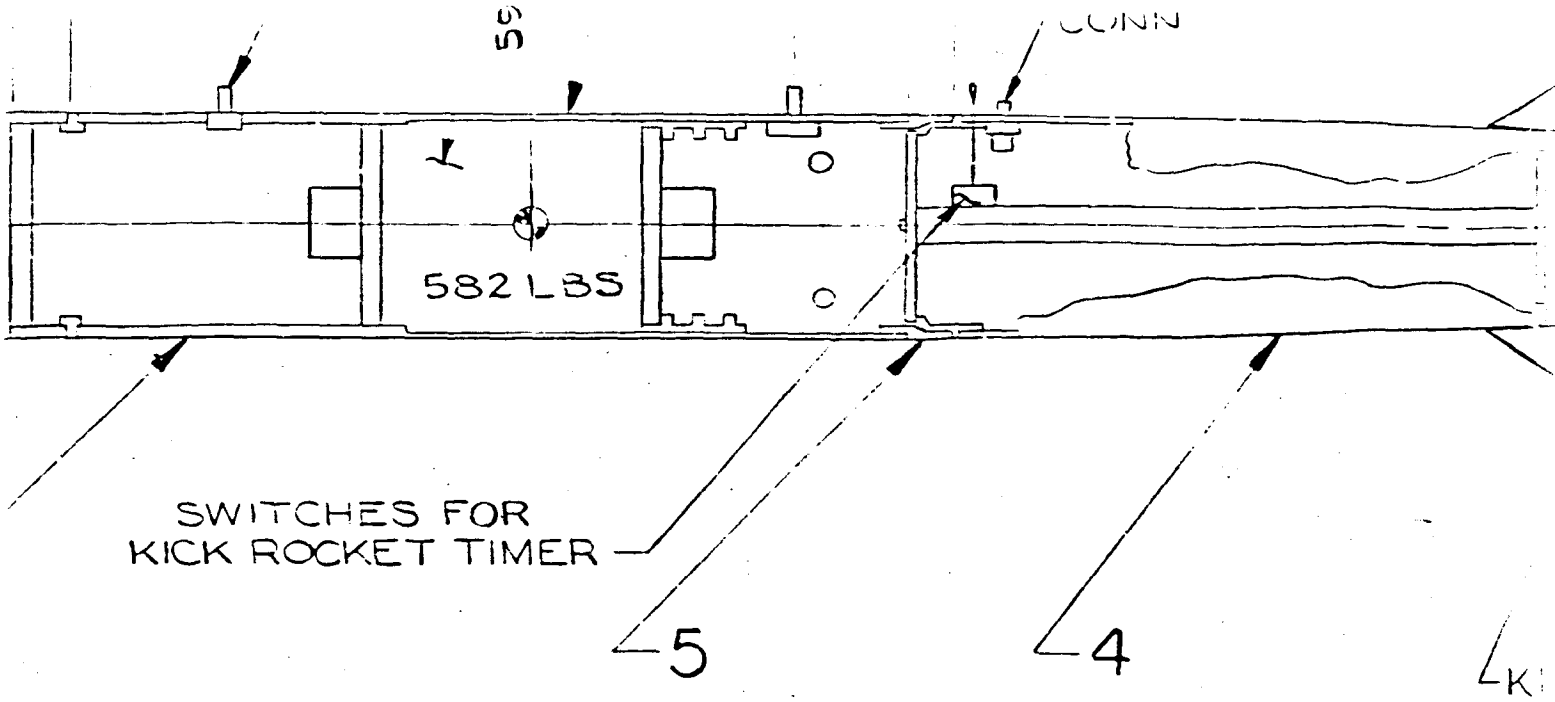


TIC
LLISTIC (MODIFIED)
C UNIT)

C UNIT (MODIFIED)

| DWG CLASSIFICATION LEVEL | PART CLASSIFI |
|---|---|
| UNCLASSIFIED | UNCLASS |

| CLASSIFICATION CATEGORY | ORG | DATE | IN |
|---|---|---|---|
| | 1513 | | |
| | | | |
| | | | |
| | | | |
| | MFG AGENCY A | | |
| | | | |
| | | | |
| | | | |
| | | | |

[redacted]

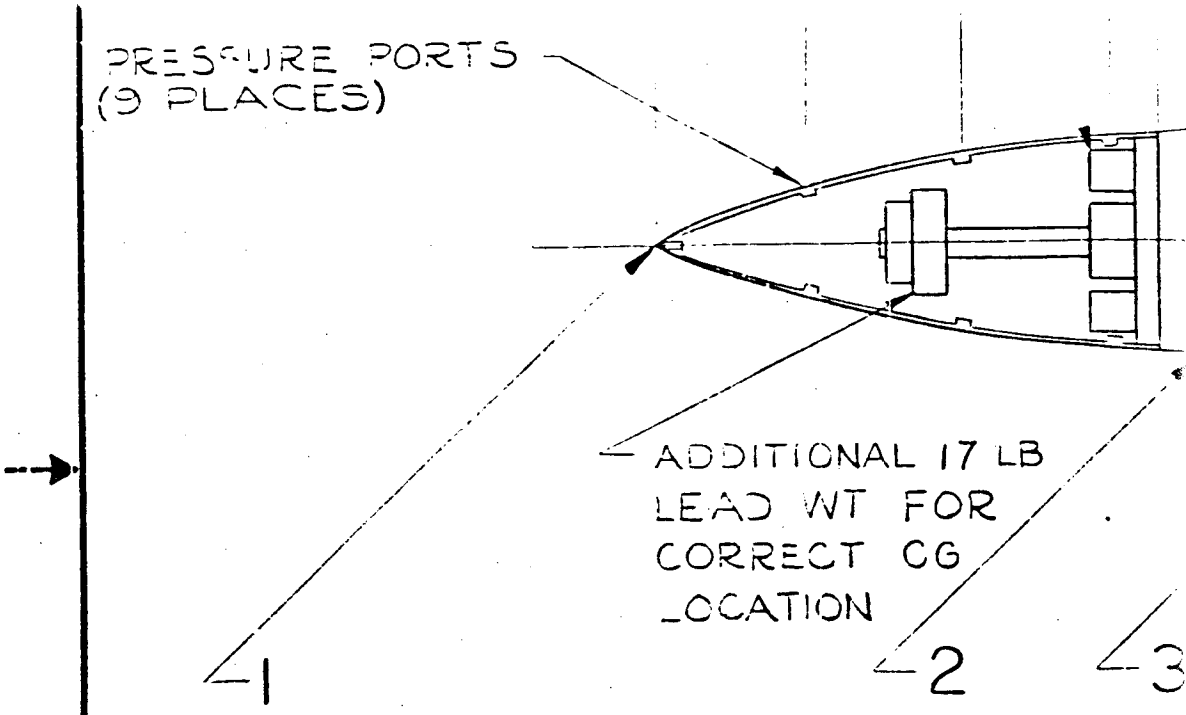


| ITEM | N-NUMBER | TITLE |
|---|---|---|
| 1 | 49146 | NOSE, BALLISTIC |
| 2 | 49147 | PLUG & WEIGHT ASSY |
| 3 | 49148 | CENTER CASE, BALLI |
| 4 | 49180 | AFTERBODY ASSY, B |
| 5 | 52399 | RING, ADAPTER (BALLIS |
| 6 | 52805 | LUG, MODIFIED |
| 7 | 49182 | PRELIMINARY BALLIS |

Figure 1

J. H. WEIL CO., PHILA. NO 100-CDP 4 CROSSPLEX

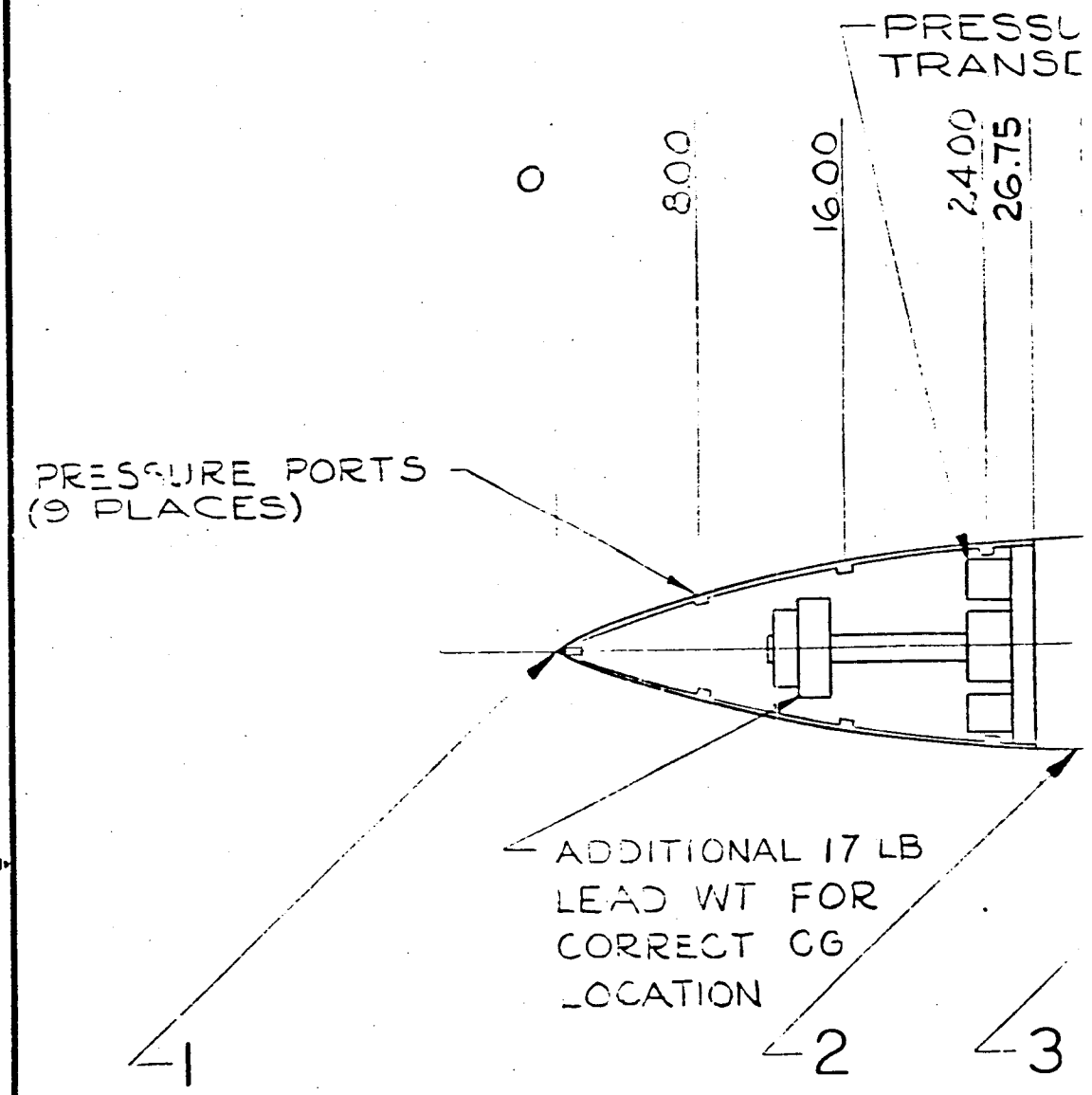


| ITEM | N-NUMBER | TITLE |
|---|---|---|
| 1 | 49146 | NOSE, BALLISTIC |
| 2 | 49147 | PLUG & WEIGHT ASSY |

UNCLASSIFIED [redacted]

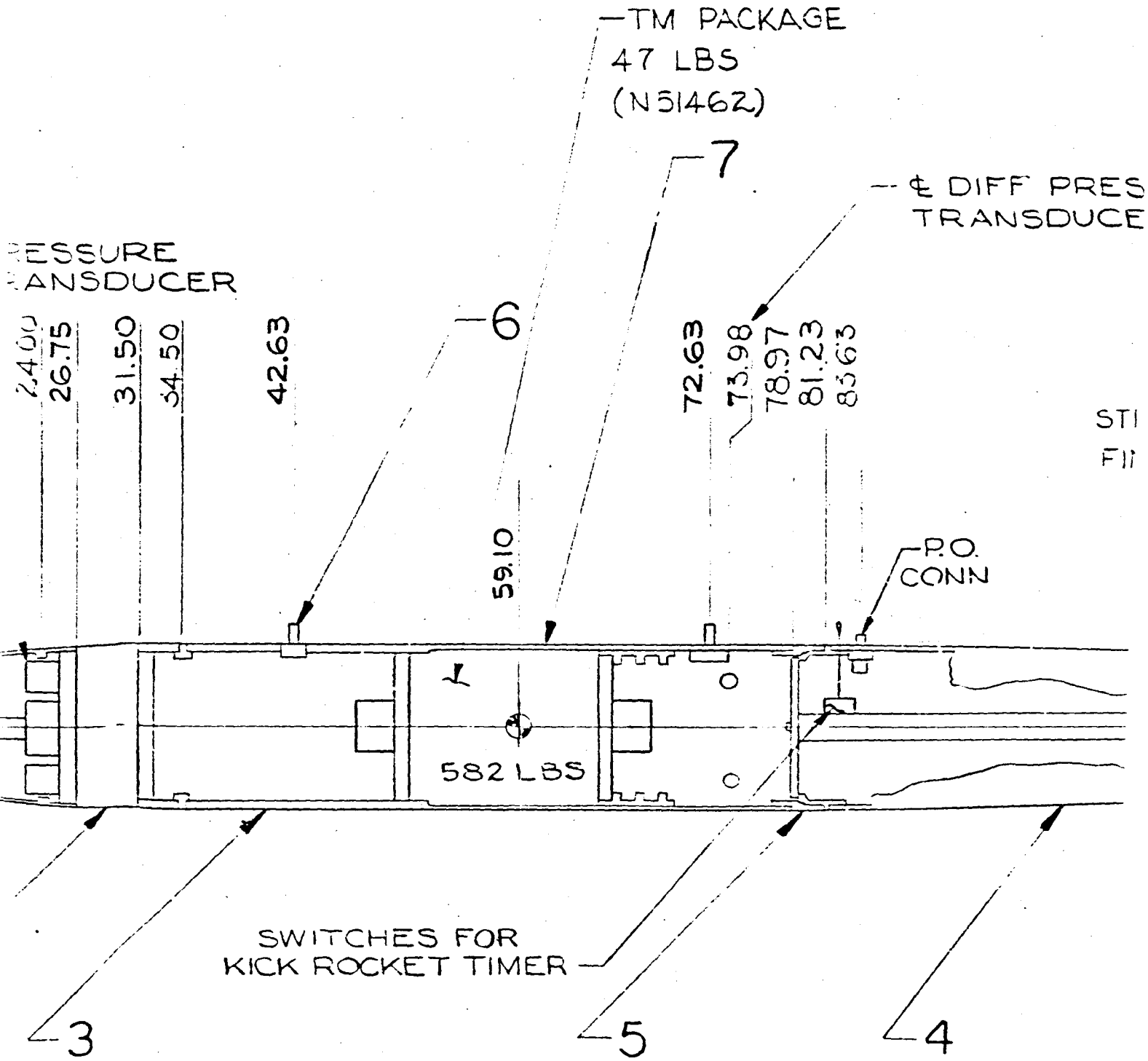

W.O. 56032

| REVISIONS | | | | |
|---|---|---|---|---|
| ISS | DESCRIPTION PREPARED BY | DATE | CHKR | ENGR |
| 1 | ALVINO 4412-5 | 6-19-63 | | |
| 2 | ADDED INSTRUMENTATION DORNEMAN 4412-5 | 7-23-63 | | |
| 3 | CHANGED TITLE. DORNEMAN 4412-5 | 8-22-63 | | |
| 4 | ADDED SW & ANT. ALVINO, 4412-5 | 10-7-63 | | |

SSURE
ERS

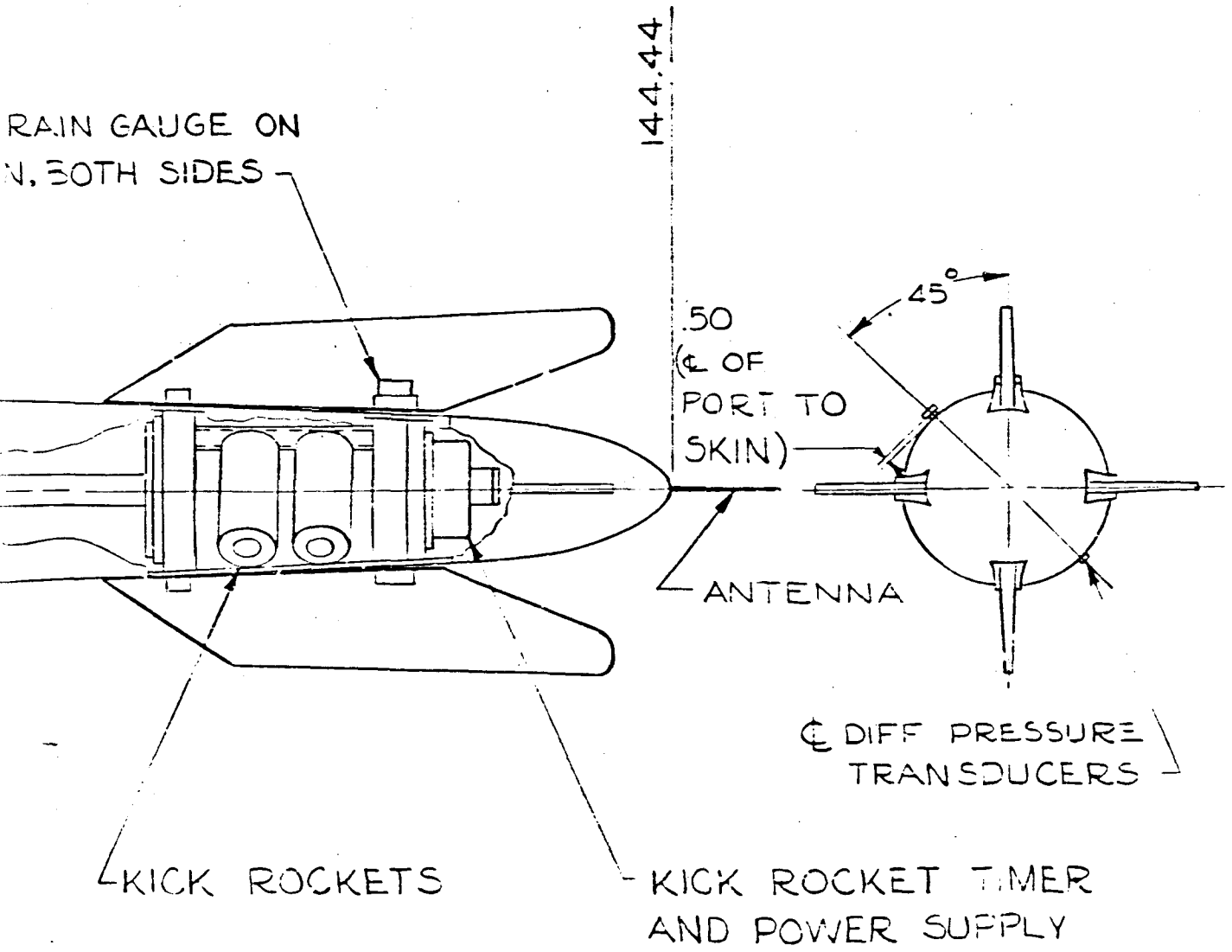


DWG. NO. N54804

## APPARATUS LIST

| REF DESIG | VALUE | MANUFACTURER'S RATING TOL ±% | WATTS | VOLTS | TYPE, PART, OR DRAWING NO. | SEE NOTE | REMARKS |
|---|---|---|---|---|---|---|---|
| C1 | 100 UF | | | | | | |
| C2 | 100UF | | | | | | |
| C3 | 4.5UF | | | | | | |
| | | | | | | | |
| CR1 | | | | | 1N457 | | |
| CR2 | | | | | 1N457 | | |
| | | | | | | | |
| K1 | | | | 24V | SL11DB | | POT & ERUM |
| K2 | | | | 24V | SL11DB | | POT & BRUM |
| | | | | | | | |
| P1 | | | | | 355511 | | SA1190-2 |
| P2 | | | | | 352643 | | SA770-15 |
| P3 | | | | | 354021 | | SA770-20 |
| P4 | | | | | 355511 | | SA1190-2 |
| | | | | | | | |
| Q1 | | | | | 2N490 | | |
| Q2 | | | | | 2N1597 | | |
| | | | | | | | |
| R1 | 2.1MEGO | | 1/2 | | | | |
| R2 | 0.1MEGO | | 1/2 | | | | |
| R3 | 2K | | 1/2 | | | | |
| R4 | 2K | | 1/2 | | | | |
| R5 | 0.1MEGO | | 1/2 | | | | |
| R6 | 470 OHM | | 1/2 | | | | |
| R7 | 1K | | 1/2 | | | | |
| R8 | 1K | | 1/2 | | | | |
| R9 | 100 OHM | | 1 | | | | |
| R10 | 100 OHM | | 1 | | | | |

| | | | |
|---|---|---|---|
| DWG CLASSIFICATION LEVEL: UNCLASSIFIED | PART CLASSIFICATION | SHEET / ISSUE | SHEET INDEX |
| CLASSIFICATION CATEGORY | ORG / DATE / INITIALS | TITLE: SCHEMATIC, JUNCTION BOX 100-3 | FIRST APPLICATION |
| | MFG AGENCY APPROVALS | MFG AGENCY NO. | SIZE D / DWG NO. N57233 |
| | | SCALE NONE / DOC. REF. SYM. | SHEET 1 OF 1 |

3 2 1

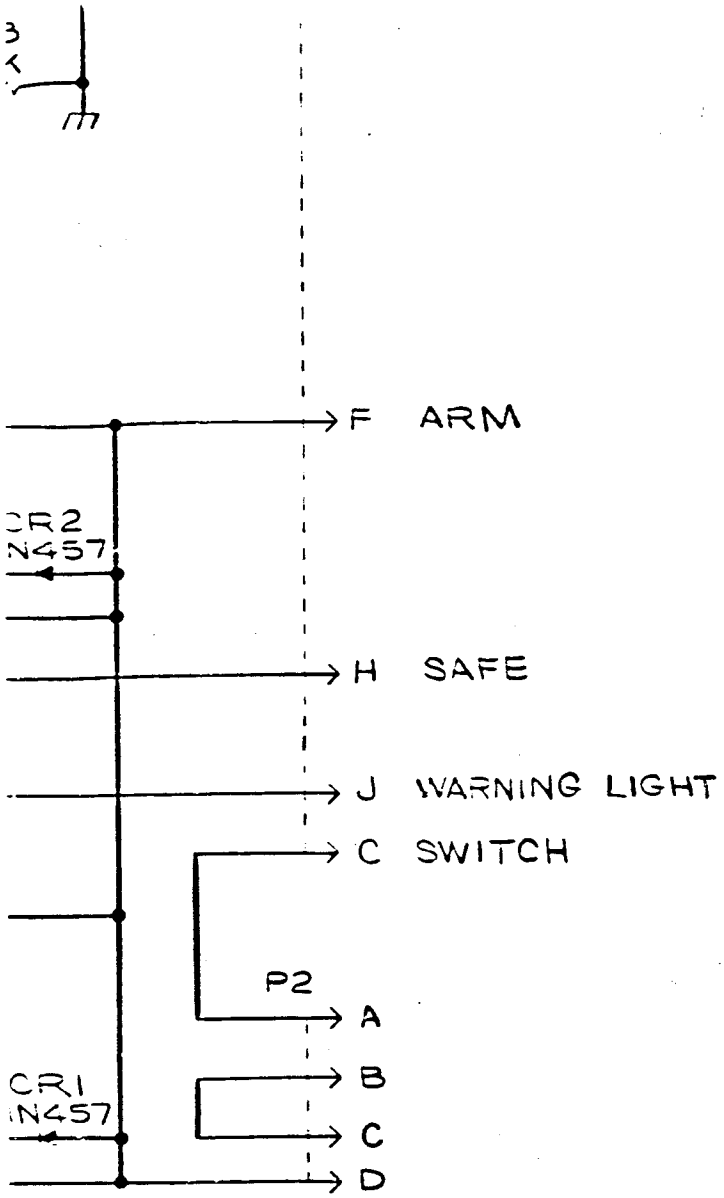
F ARM
CR2
N457
H SAFE
J WARNING LIGHT
C SWITCH
P2
A
B
C
D
CR1
N457

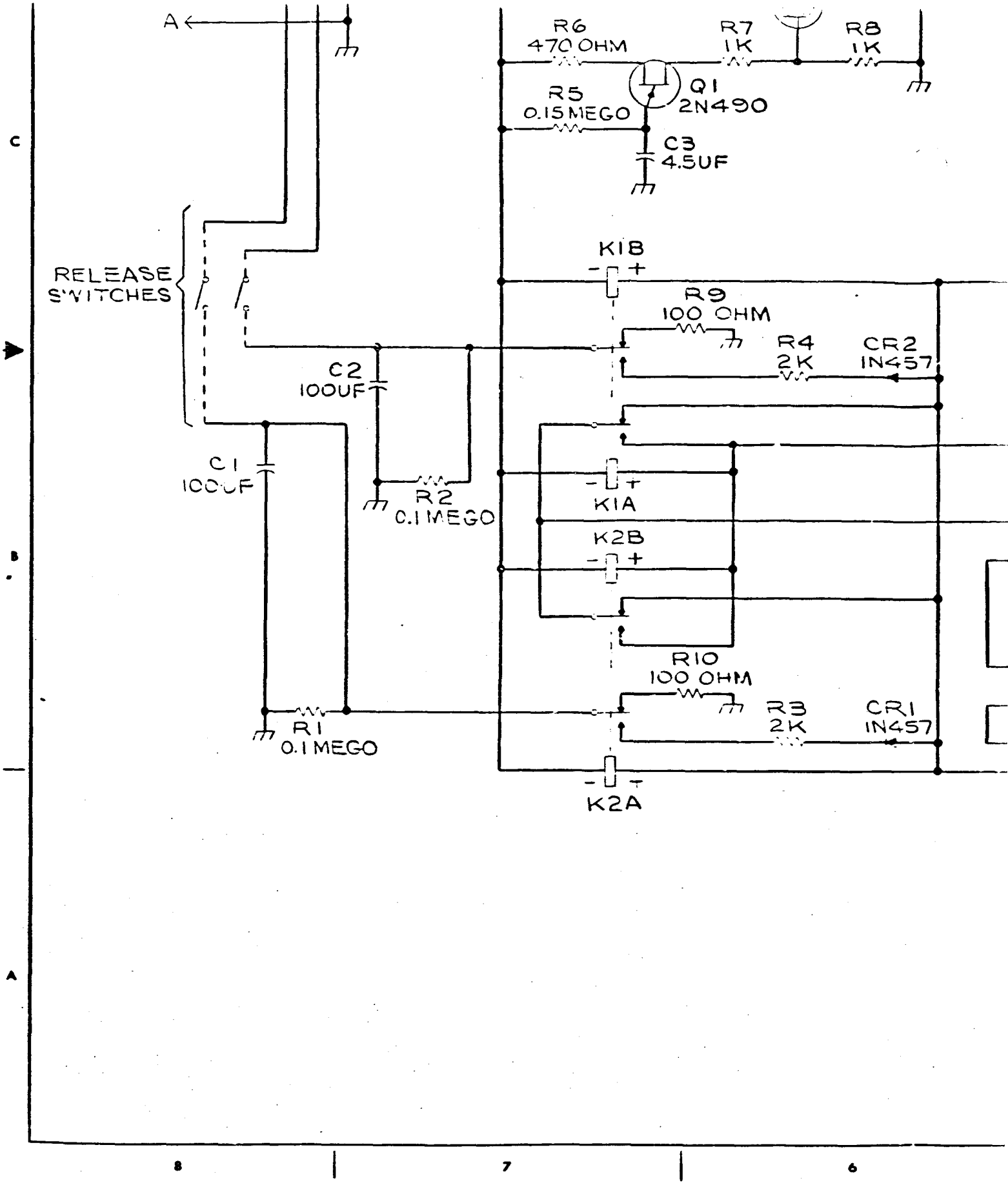
A
R6
470 OHM
R7
1K
R8
1K
R5
0.15 MEGO
Q1
2N490
C3
4.5UF
RELEASE
SWITCHES
K1B
R9
100 OHM
R4
2K
CR2
IN457
C2
100UF
C1
100UF
R2
0.1 MEGO
K1A
K2B
R10
100 OHM
R3
2K
CR1
IN457
R1
0.1 MEGO
K2A
C
B
A
8
7
6

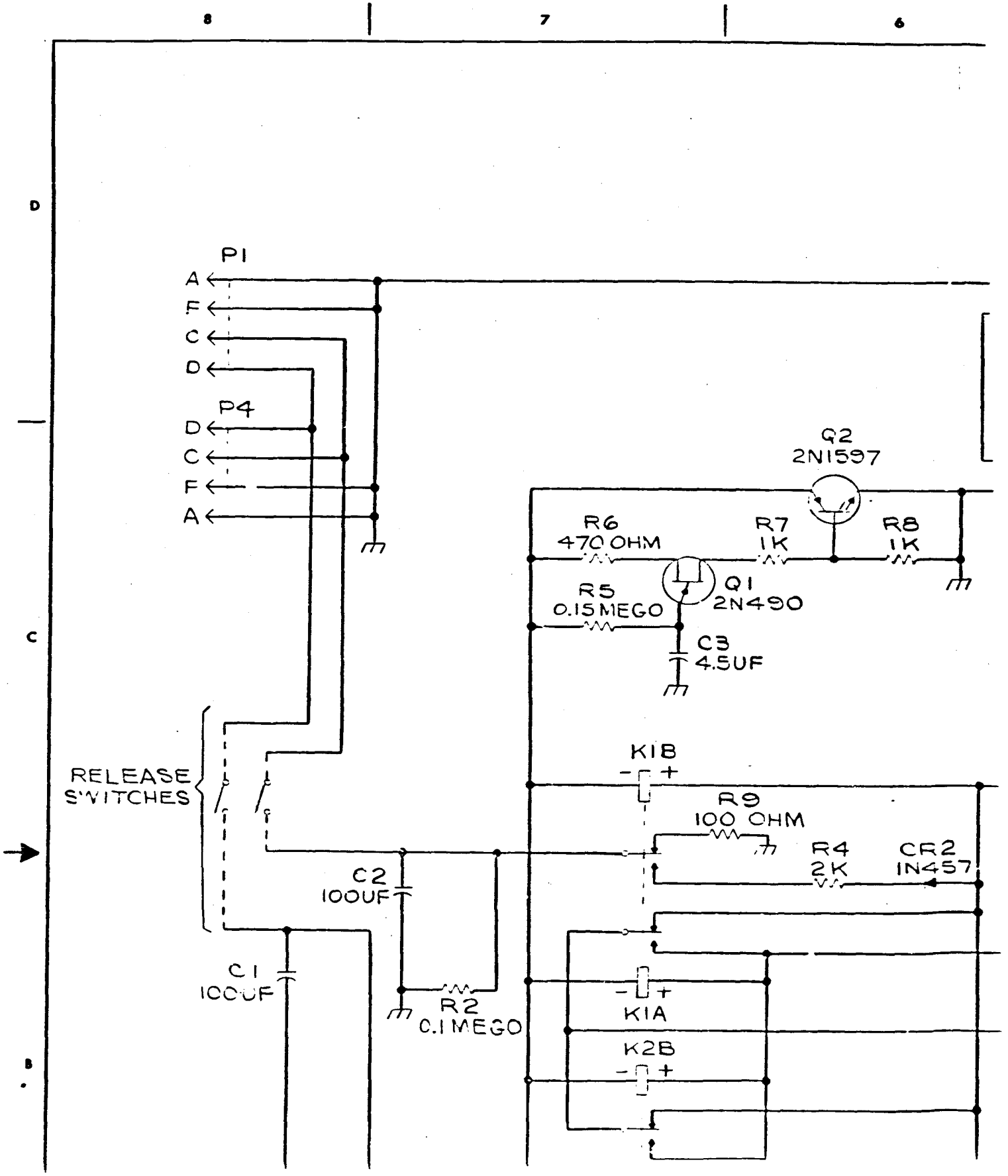
8
7
6
D
C
B
P1
A
F
C
D
P4
D
C
F
A
Q2
2N1597
R6
470 OHM
R7
1K
R8
1K
R5
0.15 MEGO
Q1
2N490
C3
4.5UF
RELEASE
SWITCHES
K1B
R9
100 OHM
R4
2K
CR2
1N457
C2
100UF
C1
100UF
R2
0.1 MEGO
K1A
K2B

[redacted]

UNCLASSIFIED

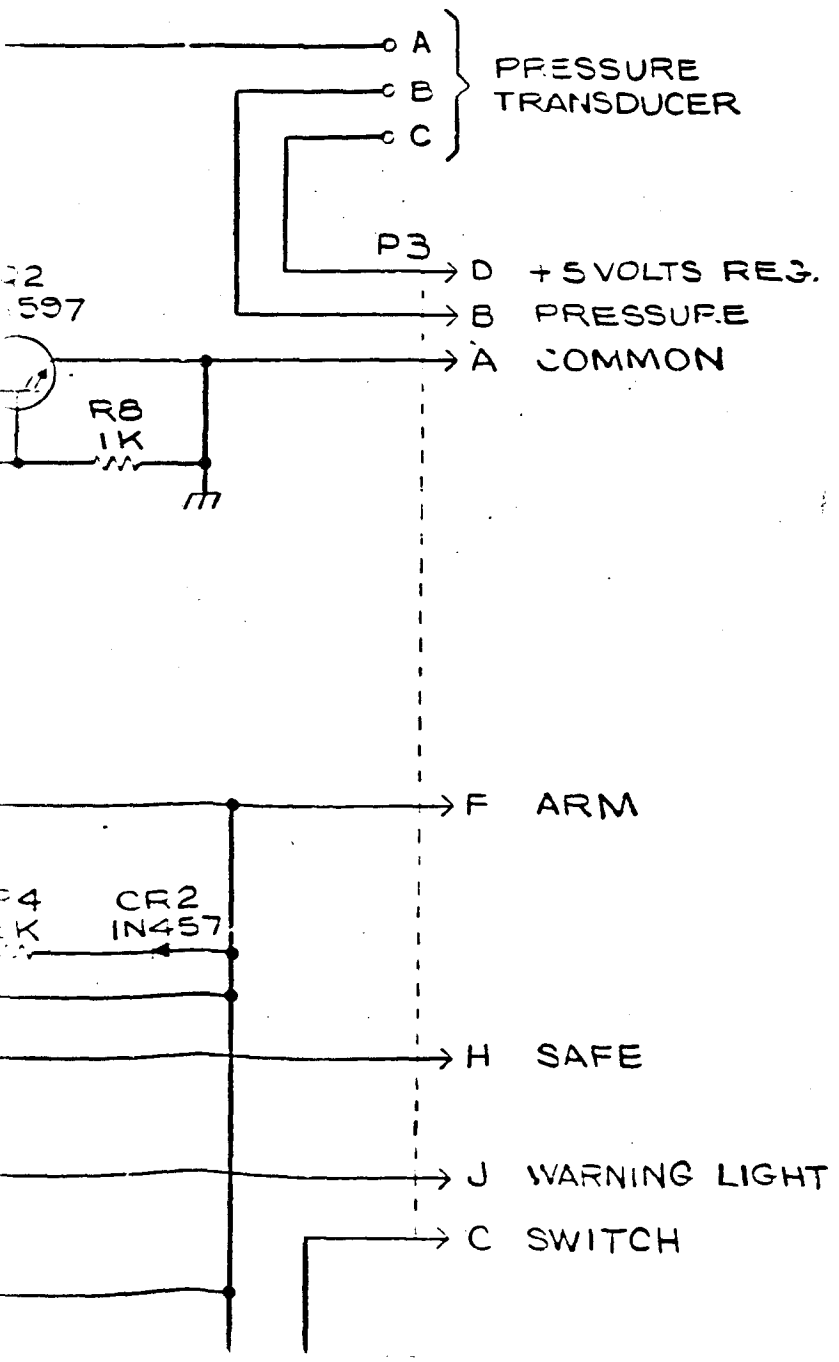

3 | 2 | W.O.59091 :

| REVISIONS | | | | | |
|---|---|---|---|---|---|
| ISS | ZONE | DESCRIPTION PREPARED BY | DATE | CHKD | ENGR |
| 1 | | BARTH, E.R. 44.3-4 | 8/21/63 | | |

D

C

| APPARATUS LIST | | | | | | | |
|---|---|---|---|---|---|---|---|
| REF DESIG | VALUE | MANUFACTURER'S RATING TOL ± % | WATTS | VOLTS | TYPE, PART, OR DRAWING NO. | SEE NOTE | REMARKS |
| C1 | 100 UF | | | | | | |
| C2 | 100UF | | | | | | |
| C3 | 4.5UF | | | | | | |
| | | | | | | | |
| CR1 | | | | | 1N457 | | |
| CR2 | | | | | 1N457 | | |
| | | | | | | | |
| K1 | | | | 24V | SLIDE | | POTEBRUM |
| K2 | | | | 24V | SLIDE | | POTEBRUM |
| | | | | | | | |
| P1 | | | | | 355511 | | SA1190-2 |
| P2 | | | | | 352643 | | SA770-15 |
| P3 | | | | | 354021 | | SA770-20 |
| P4 | | | | | 355511 | | SA1190-2 |
| | | | | | | | |
| Q1 | | | | | 2N480 | | |
| Q2 | | | | | 2N1597 | | |

B

233

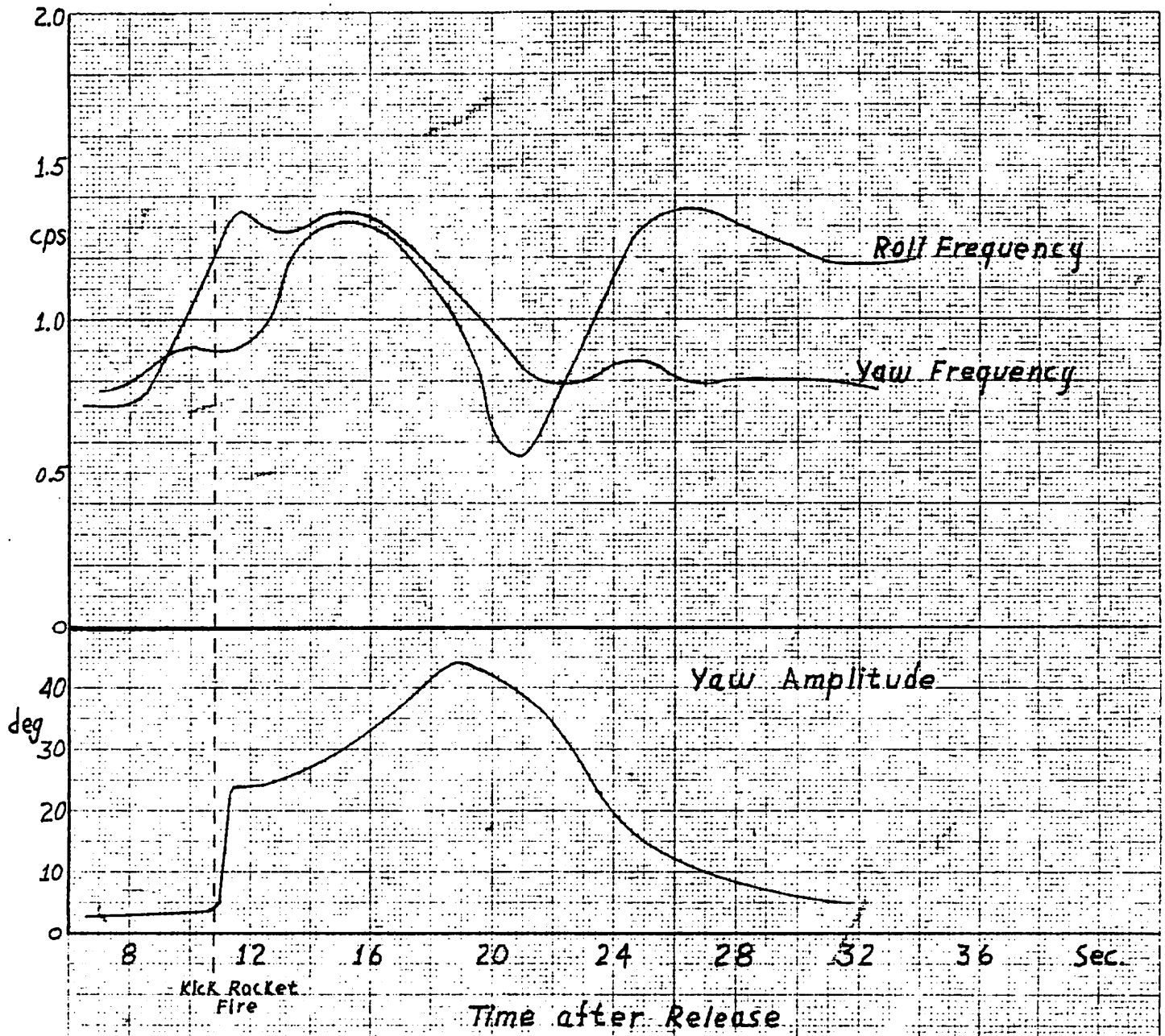
2.0
1.5
cps
1.0
0.5
0
Roll Frequency
Yaw Frequency
Yaw Amplitude
40
deg
30
20
10
0
8
12
16
20
24
28
32
36
Sec.
Kick Rocket Fire
Time after Release

100-2

Fig 3

K&E 10 X 10 TO THE CM. KEUFFEL & ESSER CO. 359-14L

DECLASSIFIED

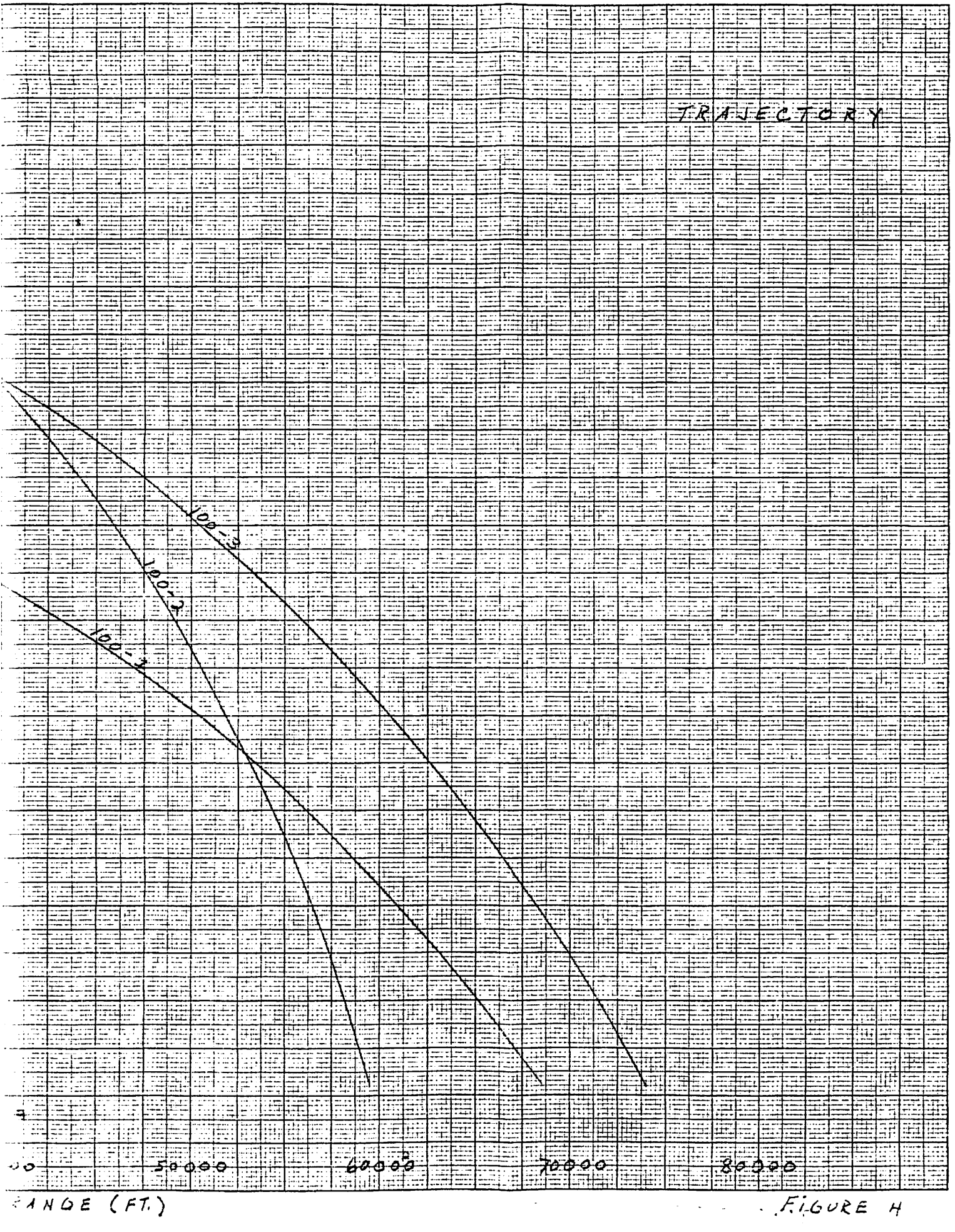


FIGURE H

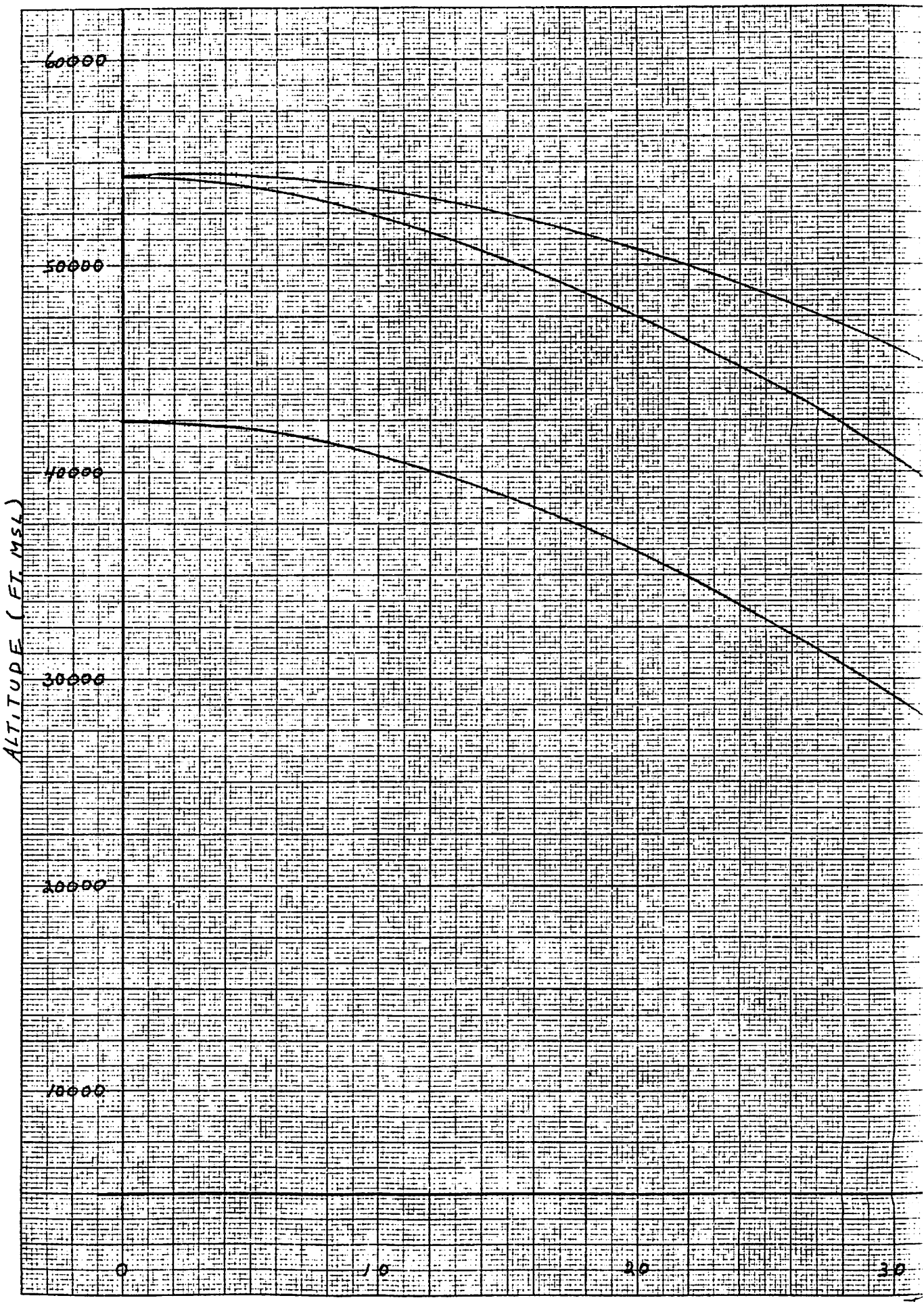


K&E 10 X 10 TO THE CM. KEUFFEL & ESSER CO. 359-14L

[redacted]

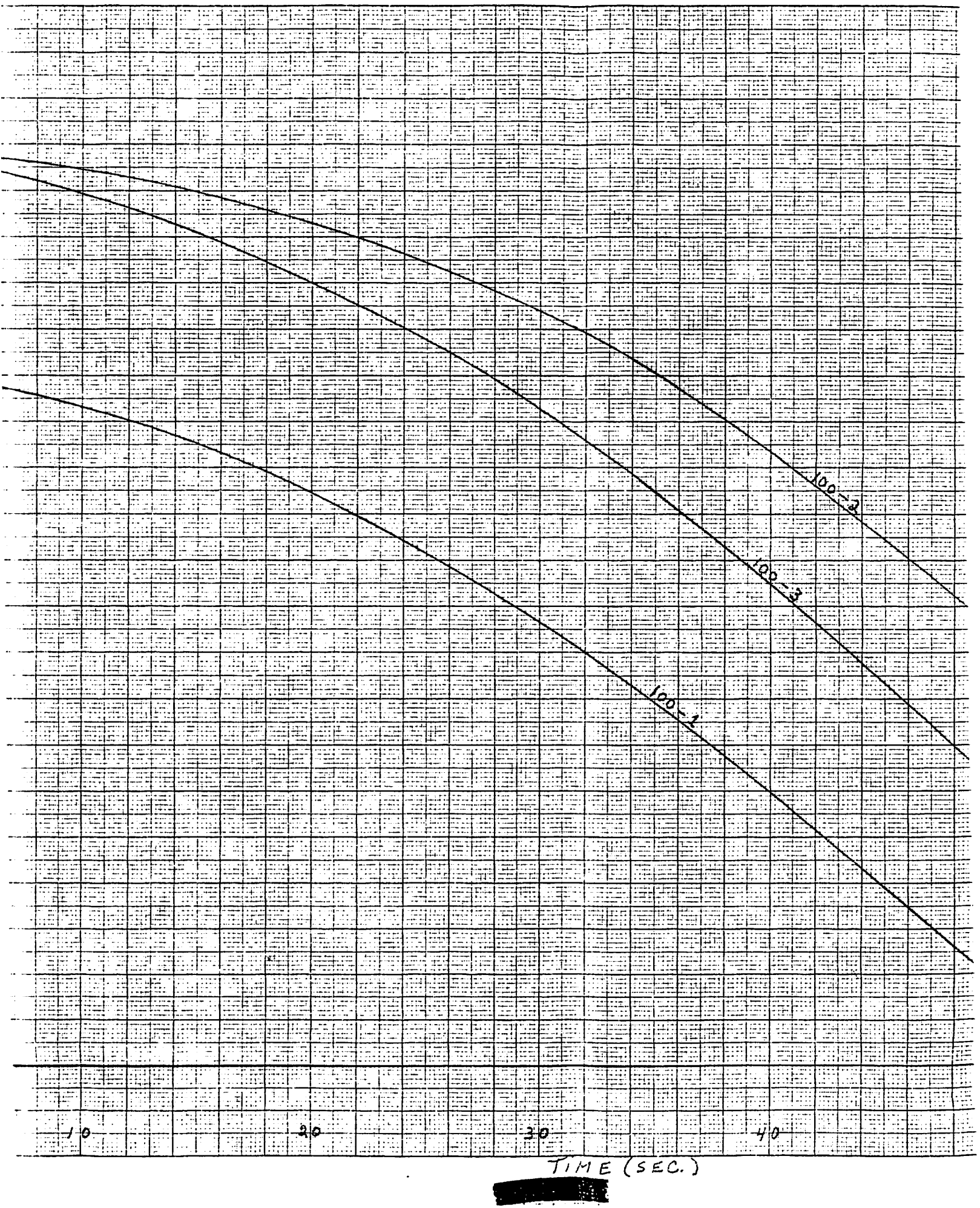


[redacted]

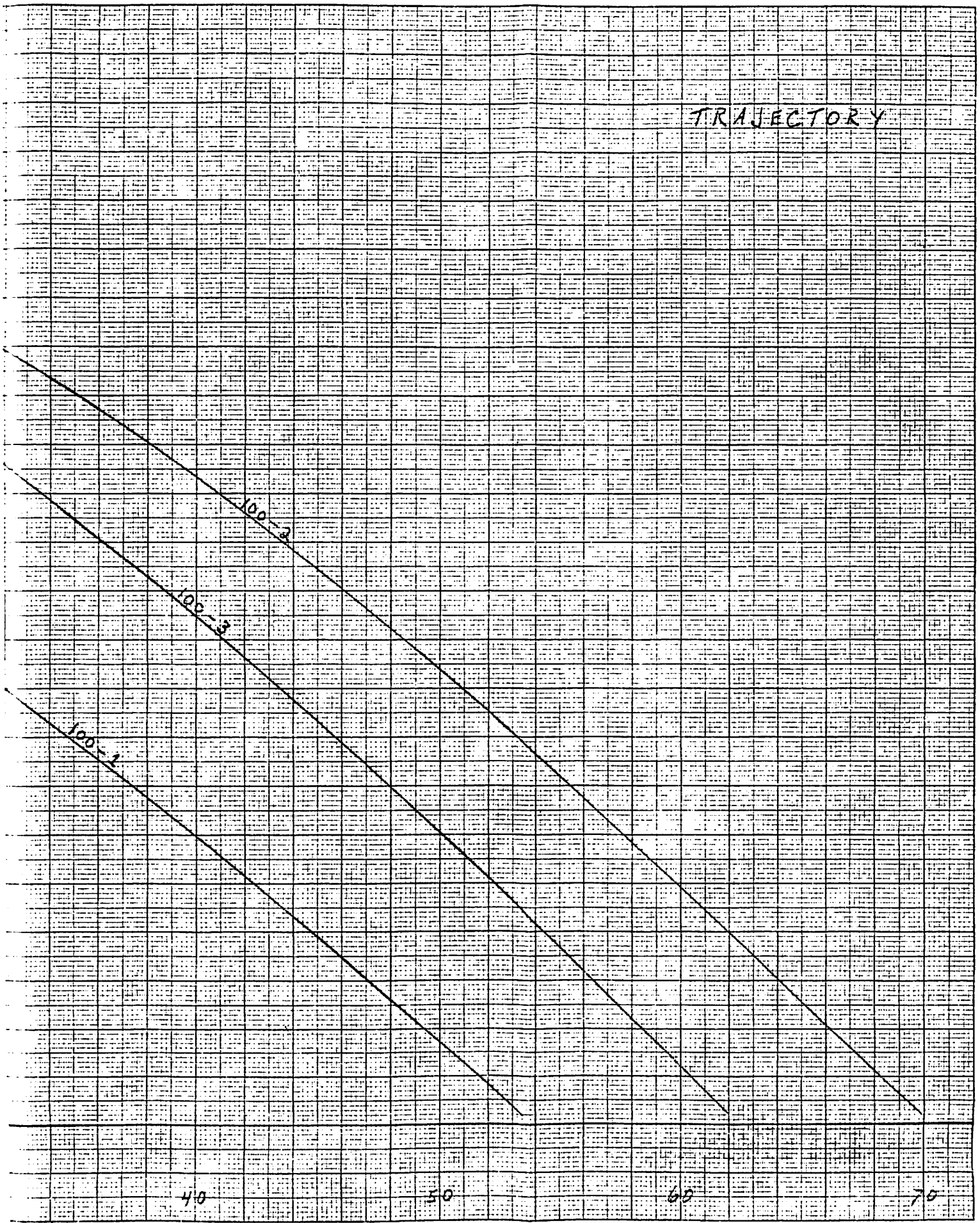


FIGURE 5

[redacted]

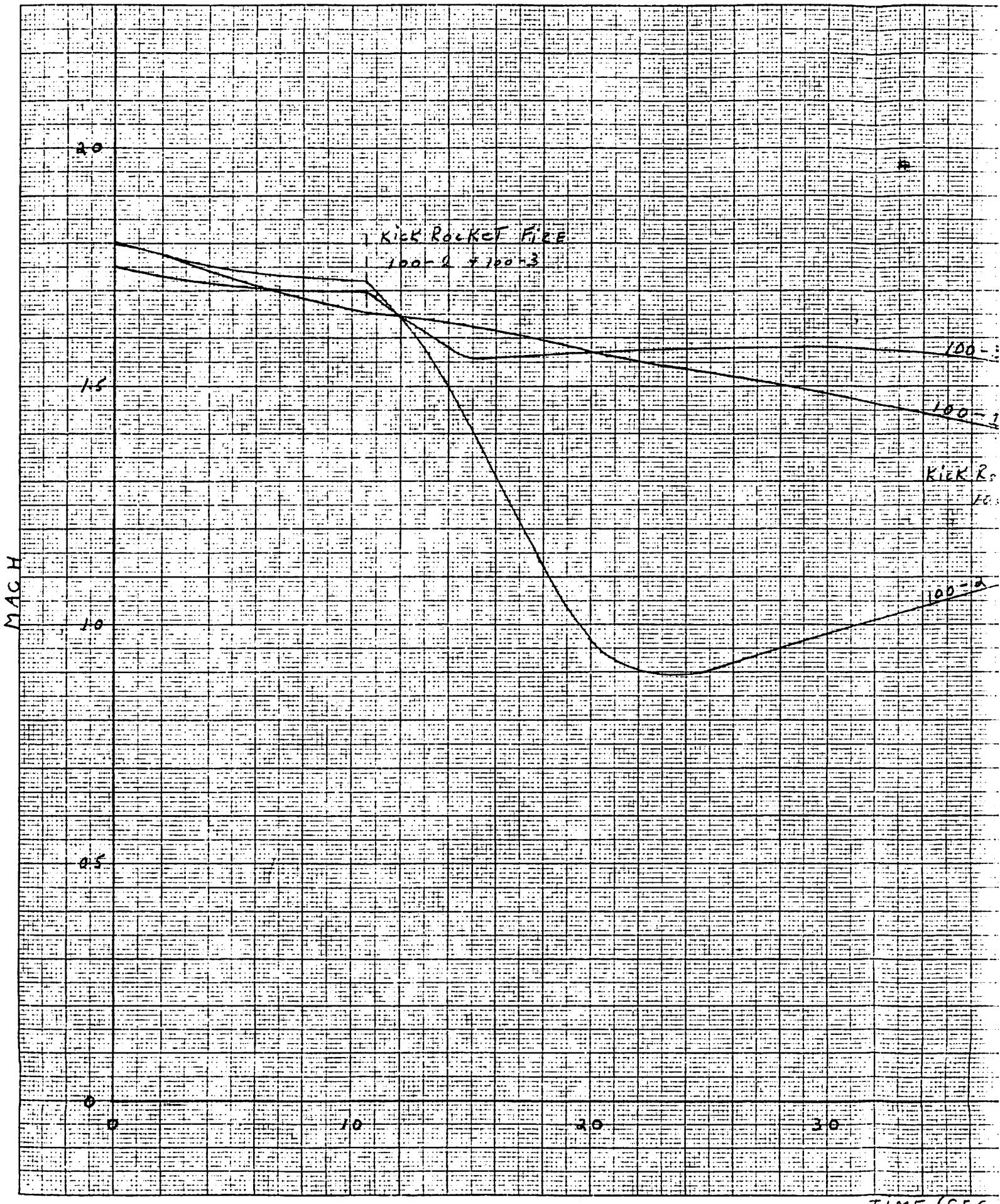


[redacted]

[redacted]

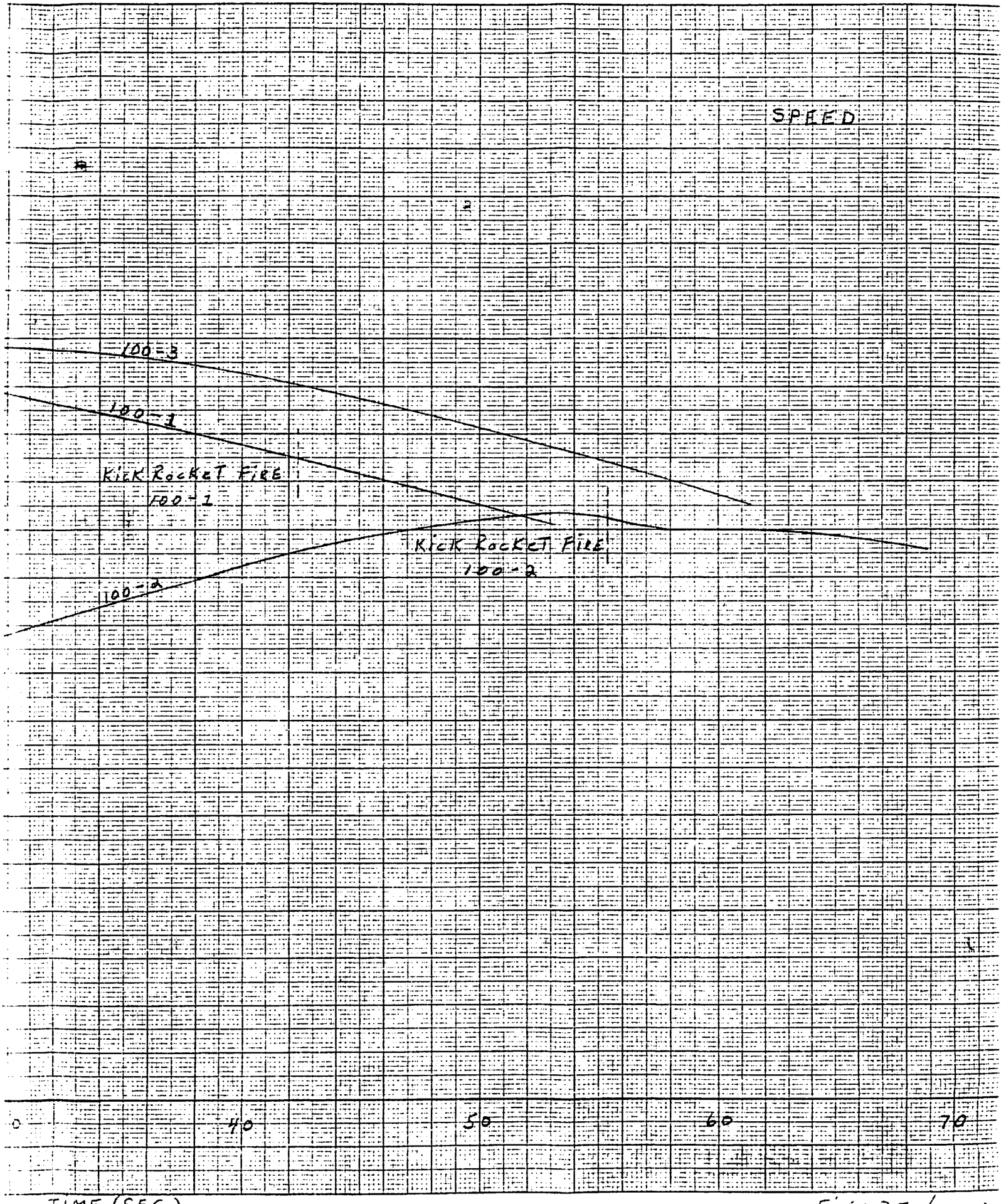


FIGURE 6

[redacted]

[redacted]

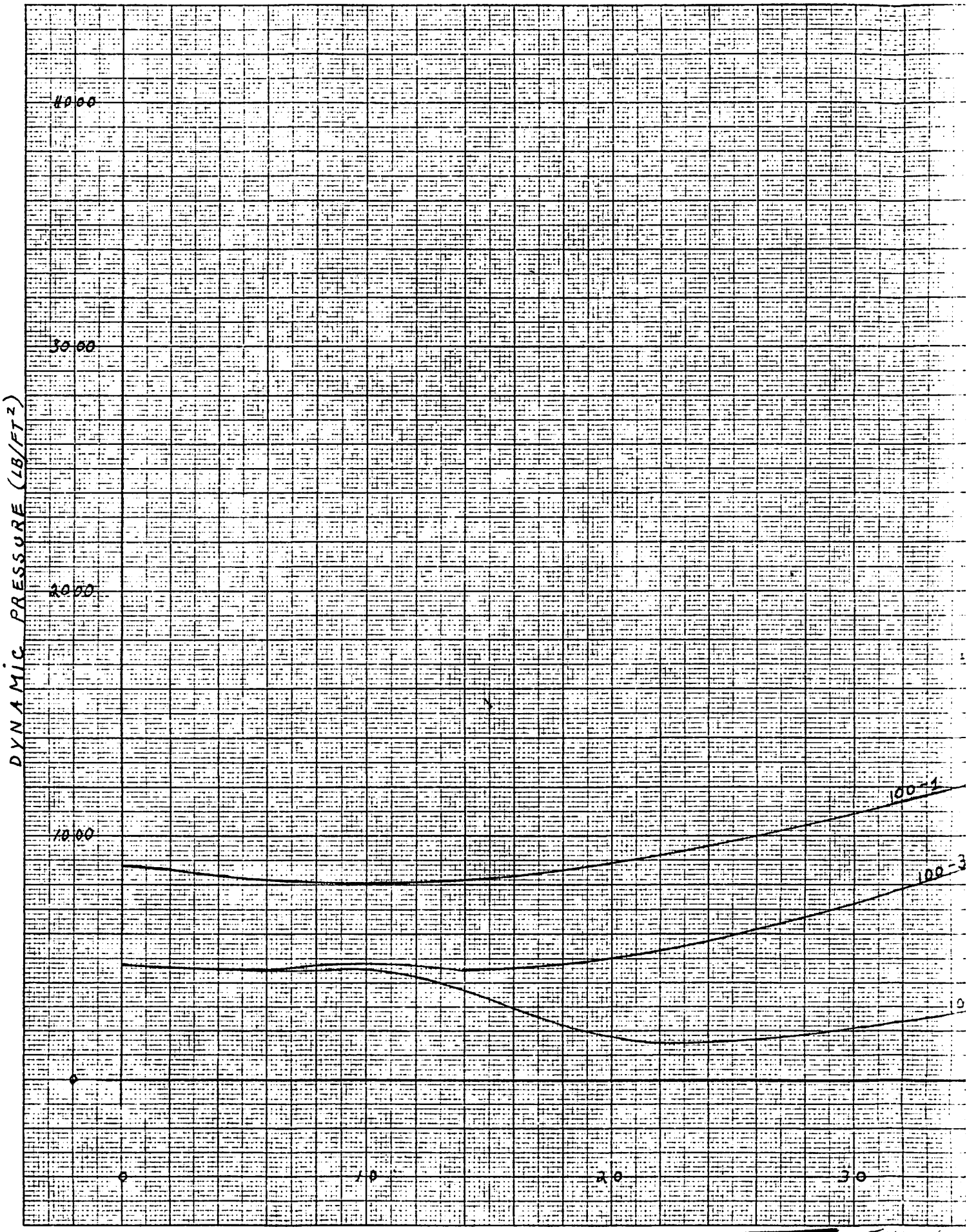


[redacted]

ASSIFIED

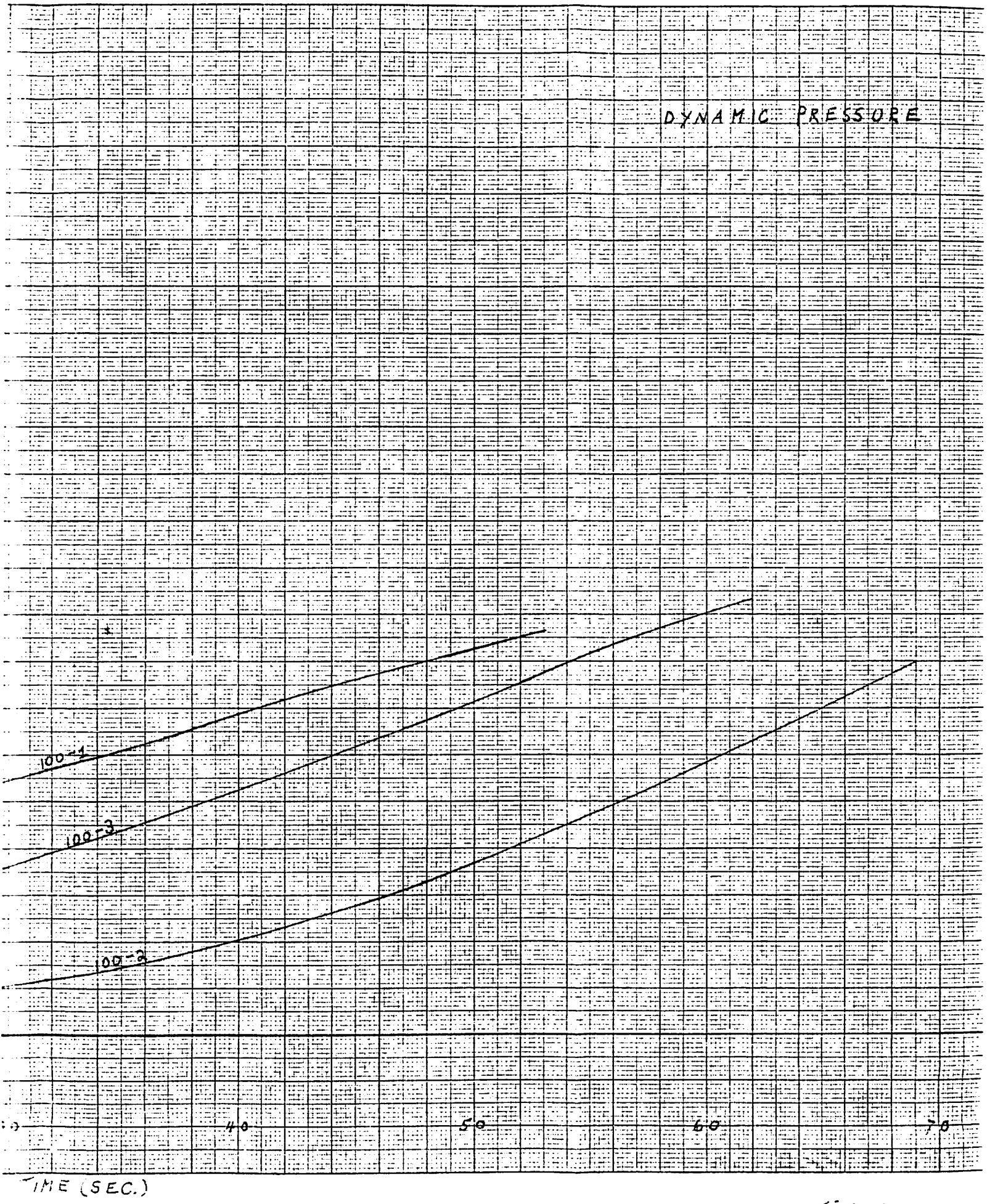


FIGURE 7