[redacted]

SC-DR-64-0946

UNCLASSIFIED

SANDIA SYSTEMATIC DECLASSIFICATION REVIEW
DOWNGRADING OR DECLASSIFICATION STAMP

CLASSIFICATION CHANGED TO: U AUTHORITY: W.C. Layne
Emelda Selph 7/31/97
PERSON CHANGING MARKING & DATE: REPORT NO. 97SN3160
Carmela Gallegos 8/12/97
PERSON VERIFYING MARKING & DATE: DATED 7-29-97

SANDIA SYSTEMATIC DECLASSIFICATION REVIEW
1st Review Date: 7/28/97
Authority: DOC ADD
Name: RB Cramer
2nd Review Date: 7-29-97
Authority: ADD
Name: Whayne

Determination (Circle Numbers)
1. Classification Retained
2. Classification Changed to: Und
3. Contains No DOE Classified Information
4. Contains Wit
5. Contains UCAI?
6. Comments: UNCLASSIFIED

SC-DR-64-946

REPORT ON TX-61 WEAPON TESTS 101-3 AND 101-4 (Title Unclassified)

INVENTORIED
MAR 1 1966
3428-3

[redacted]

B. C. Caskey and R. R. Precit, 1513
Sandia Laboratory, Albuquerque

RS 3410/99

INVENTORIED
MAR 8 1965
3427-1

July 1964

Approved by: James W. Jones
J. W. Jones, 1510

ABSTRACT (U)

This report supplements SCDR 299-63, Test Plan for TX-61 Weapon Test 101-3, and SC-DR-64-12, Test Plan for TX-61 Weapon Test 101-4. It reports test results and conclusions on the first two ballistic retarded units of the TX-61 weapon development program.

[redacted]

[redacted]

[redacted]

[redacted]

UNCLASSIFIED

[redacted]

[redacted]

DISTRIBUTION:

1/24A - Director, Air Force Weapons Laboratory (AFWL)
Attn: WLL (M. F. Canova), KAFB, N. M.,
For: Capt. W. F. Herdrich, WLDC-2
2/24A - Hq., FC/DASA, Attn: Adj. Gen.,
For: Major R. K. Wright, FC/DD-3
3/24A - J. M. Wiesen, 1440
4-7/24A - C. L. Carpenter, 1513
8/24A - H. H. Patterson, 1530
9/24A - S. A. Moore, 1540
Attn: D. M. Bruce, 1542
10/24A - A. F. Cone, 2110
11/24A - W. V. Hereford, 7215
12-13/24A - H. S. North, 7241
Attn: D. L. Gorsline, 7241-1
14/24A - A. Y. Pope, 7420
Attn: W. H. Curry, 7424
15/24A - B. R. Allen, 3421
16/24A - M. G. Randle, 3428-1, Bldg. 880
17/24A - M. G. Randle, 3428-1, Bldg. 836
18/24A - E. A. Paxton, Jr., 8232-1
19/24A - W. F. Carstens, 3410
Attn: J. M. Zanetti, 3412
20-24/24A - R. C. Smelich, 3427-3

~~THIS REPORT WAS PREPARED FOR DISTRIBUTION WITHIN THE AGENCIES LISTED ABOVE. NO FURTHER DISTRIBUTION SHALL BE MADE OUTSIDE THE AGENCIES WITHOUT THE CONCURRENCE OF SANDIA CORPORATION AND THE DIVISION OF MILITARY APPLICATION OF THE AEC.~~

REPRODUCTION ~~PERMISSION~~

~~This [illegible] reproduced in whole or in part, without permission by the manager of the [illegible] department.~~

DECLASSIFIED

[redacted]

TABLE OF CONTENTS

	Page
Introduction	4
Test Objectives	4
Summary	5
Description of Test Vehicles	5
Instrumentation	6
Test Results	8
APPENDIX -- Serial Numbers of Parts Used	10

REPORT ON TX-61 WEAPON TESTS 101-3 AND 101-4

Introduction

Weapon tests 101-3 and 101-4 were the first two retarded airdrops of the TX-61 weapon development series. Although two preliminary retarded airdrops (101-1 and 101-2) had been performed earlier, they used nonprototype hardware. Table I summarizes the release conditions for Tests 101-3 and 101-4.

TABLE I

Test No.	Date	Carrier	Altitude (ft above target)	Speed (KTAS)	Dynamic Pressure (lb/ft^2)	Eject. Vel. (fps)	Wind Vel. (fps)	Wind Dir. (°)
101-3	11/27/63	A-4C	1936	319	274	17	15.2	331
101-4	1/31/64	F-104C	985	600	1069	14.4	30	6

Figure 1* shows the 101-3 test unit on the A-4C, and Figure 2 shows the 101-4 test unit on the F-104.

Test Objectives

The purposes of Tests 101-3 and 101-4 were:

1. to evaluate parachute deployment and operation at minimum dynamic pressure (101-3 only),
2. to evaluate parachute deployment and operation at medium dynamic pressure (101-4 only),
3. to determine the g-second input available for operation of the MC1839 inertial switch,

*To preserve continuity of the text, all figures appear following the Appendix at the end of the report.

4. to determine the retarded trajectory, and

5. to investigate aircraft separation characteristics.

Summary

Both tests met all objectives. Test 101-3 demonstrated satisfactory A-4C aircraft separation and satisfactory parachute deployment at minimum dynamic pressure. The parachute deceleration was not sufficient to close the XMC1839's, which were set to close at 16 g's. As a result of this test, the XMC1839 specifications were changed to guarantee closure at 12 g's.

Test 101-4 demonstrated satisfactory aircraft separation from the F-104, satisfactory parachute deployment at medium dynamic pressure (even when the outer tube was not retained), and satisfactory XMC1839 operation.

Description of Test Vehicles

The configurations dropped in these two tests are illustrated in Figures 3 and 4. The serial numbers of the parts used are listed in the Appendix of this report. Table II summarizes the physical characteristics of the two units.

TABLE II

	101-3	101-4
Weight (lb)	595	595
CG (station)	60	59.75
Yaw MI (lb-in.^{2})	635,000	637,000

A schematic of the electrical system used in Test Unit 101-3 is shown in Figure 5. This system used two 500-μfd capacitors and an MC982 pullout switch to initiate two MC1724 thermal batteries at release. The thermal batteries, in turn, fired the XMC1835, which deployed the parachute. An MC754 arm-safe switch was used to provide ground-handling and aircraft carriage safety. This system was used because the XMC1876 pulse actuator developed for the TX-61 was not available at the time of the test. The XMC1876 contains two XMC1855 thermal batteries which have voltage-time

UNCLASSIFIED

characteristics similar to the MC1724 batteries. The delay from aircraft release to parachute deployment initiation caused by pullout lanyard length and battery rise time is approximately 0.10 second using either battery.

A schematic of the electrical system used in Test Unit 101-4 is shown in Figure 6. This system used the XMC1876 pulse actuator to deploy the parachute. Two XMC1855 thermal batteries were initiated by a percussion cap which was fired by a striker mechanism, tripped at release by a pullout lanyard. At approximately 0.1 second after release, the batteries fired an XMC1835 gas generator to deploy the parachute. The XMC1876 safes the percussion mechanism with a motor-driven arming-safing device providing ground-handling and aircraft carriage safety.

The electrical systems for both tests were interconnected with the telemetry in a laboratory-made junction box located in the preflight section. Two XMC1839 inertial switches located in the junction box were monitored to determine their operational characteristics during TX-61 parachute deceleration.

Instrumentation

The TM package used with these two tests consisted of two independent, 2-watt transmitters and their independent oscillators multiplexed together. The antenna system consisted of two antennas mounted 180 degrees apart on the horizontal centerline at Station 74 of each unit. The channels used and the functions monitored are listed below:

Test 101-3		Test 101-4		
Transmitter		Transmitter		
A (226.7 mc) Osc. Freq. (kc)	B (232.9 mc) Osc. Freq. (kc)	A (226.7 mc) Osc. Freq. (kc)	B (232.9 mc) Osc. Freq. (kc)	Function
1.3		1.3		Roll gyro (continuous)
1.7		1.7		Pitch gyro (+45 to -115 degrees)
2.3		2.3		Yaw gyro (±85 degrees)
3.0		3.0		Gyro cage/uncage monitor
		3.9		Shroud-line support No. 2 strain
		5.4		Shroud-line support No. 3 strain

UNCLASSIFIED

Test 101-3 Transmitter A (226.7 mc) Osc. Freq. (kc)	Test 101-3 Transmitter B (232.9 mc) Osc. Freq. (kc)	Test 101-4 Transmitter A (226.7 mc) Osc. Freq. (kc)	Test 101-4 Transmitter B (232.9 mc) Osc. Freq. (kc)	Function
		7.35		Shroud-line support No. 4 strain
10.5		10.5		MC1839 No. 1 operation
22.0		22.0		Longitudinal acceleration (0-35 g's)
30.0		30.0		Lateral acceleration (±20 g's)
40.0		40.0		Pulse battery No. 1 (0-35 volts)
52.5		52.5		Hoop strain
70.0		70.0		Vertical acceleration (±20 g's)
			3.9	Shroud-line support No. 6 strain
			5.4	Shroud-line support No. 7 strain
			7.35	Longitudinal acceleration (-5 to +75 g's)
	10.5		10.5	MC1839 No. 2 operation
	40.0		40.0	Pulse battery No. 2 (0-35 volts)
	52.5		52.5	Longitudinal strain

The hoop and longitudinal strains were measured on the inside deployment tube and were calibrated on Test 101-3 to 7000 µin./in. (longitudinal tension) and 8000 µin./in. (hoop tension). On Test 101-4 the calibration was changed to 5000 µin./in. (tension) and 1500 µin./in. (hoop and longitudinal tension). The shroud-line support strain on Test 101-4 was measured on five of the ribs of the shroud-line support ring. The gages were calibrated to 3700 µin./in. (tension) and 3000 µin./in. (compression).

The TM packages for both units were located as shown in Figures 3 and 4. Each package weighed 105 pounds.

Test Results

Test 101-3

In Test 101-3, the unit separated satisfactorily from the aircraft and displayed negligible pitch and yaw. The ejection velocity, computed by integration of the vertical acceleration, is shown in Figure 7. Both pulse batteries operated, and fired the gas generator at 0.090 second after release. Figures 8 and 9 are graphs of the voltages versus time. The parachute sequence, computed from optical data, was:

Event	Time (sec)
Release	0.00
Tail cone separation	0.10
Line stretch	0.27
Full canopy	1.06

Figure 10 is a graph of longitudinal acceleration versus time, based on TM data. Parachute operation and time of parachute deployment were satisfactory. Neither XMC1839 inertial switch operated because the switches were set to operate at 15.5 g's, and the deceleration of the unit was only 14.2 g's. These switches were tested after the drop and operated at their settings. In 0.95 second after release, the unit rolled 24 degrees CCW, then reversed its roll and rolled about 1-1/2 revolutions CW before impact. The pitch angle at impact was 88 degrees. Figures 11 through 14 are curves showing trajectory data for this test. Figure 11 shows the trajectory (fall distance versus range and time); Figure 12 shows the turnover (fall distance versus trajectory angle); Figure 13 shows the velocity (fall distance versus vertical velocity, total velocity with respect to air, and total velocity with respect to ground); and Figure 14 shows the drag coefficient (C_DS versus time from release). The hoop and longitudinal strain data were not usable. Figure 15 shows the overall view of the unit after impact.

Test 101-4

In Test 101-4, the unit separated satisfactorily from the aircraft and displayed negligible pitch and yaw. The ejection velocity, computed by integration of the vertical acceleration, is shown in Figure 16. Both pulse batteries operated and fired the gas generator at 0.085 second after release. Figures 17 and 18 are graphs of the voltages versus time. The parachute sequence, computed from optical data, was:

Event	Time (sec)
Release	0.00
Tail cone separation	0.12
Line stretch	0.24
Full canopy	0.98

Figure 19 is a graph of longitudinal acceleration versus time, based on TM data. Although the parachute operation and time of parachute deployment were satisfactory, the outer deployment tube did not remain with the unit as intended. Both MC1839's operated satisfactorily. Figure 20 is a graph of the longitudinal acceleration showing the XMC1839 operation. The unit rolled 250 degrees CW before impact. The pitch angle at impact was 99 degrees. Figures 21 through 24 are curves of trajectory data for this test. Figure 21 shows the trajectory (fall distance versus range and time); Figure 22 shows the turnover (fall distance versus trajectory angle); Figure 23 shows the velocity (fall distance versus vertical velocity, total velocity with respect to air, and total velocity with respect to ground); and Figure 24 shows the drag coefficient (C_DS versus time from release).

The maximum hoop, longitudinal, and shroud support strains measured during this test were as follows:

Type of Strain	Strain (μin./in. tension) Measured at Parachute Ejection	Strain (μin./in. compression) Measured at Maximum Parachute Deceleration
Tube (hoop)	4730	-
Tube (longitudinal)	3380 (when cutters are cutting)	-
Shroud-support rib No. 2	1410	900
Shroud-support rib No. 3	1500	600
Shroud-support rib No. 4	1600	Failed
Shroud-support rib No. 6	1600	700
Shroud-support rib No. 7	Failed	Failed

Figure 25 shows the overall unit after impact.

[redacted]

UNCLASSIFIED

APPENDIX

Serial Numbers of Parts Used

Item	101-3 Serial No.	101-4 Serial No.	Remarks
Retarded nose	B-2001	Not used	Empty
Nose case	Not used	BBN-X122-L3	Empty
Case extension	Not used	BBN-X127-J-3	Empty
Aluminum center case	2	3	Both reused from other tests
Grill	6570	6571	Permanently installed in case
Spacer	X-002	X-002	Same on both drops
Forward ballast	010	010	Same on both drops
Cover plate	57003-H3	57003-H3	Same on both drops
External thread ring	4	1	
Preflight section	RF-002	RF-002	Same on both drops
Aft clamp	RCS-0003-G3	2	
Door assembly	A-0004	A-0004	Same on both drops
Junction box	2	UJB-1003	Made in the laboratory
XMC1839	13 (15.8 g)	15 (14.8 g)	Switch 1
XMC1839	17 (15.3 g)	16 (14.8 g)	Switch 2
Tail section	014	014	Same on both drops
Pulse initiator	005	Not used	Made in the laboratory
MC1876	Not used	1	Used on Test 102-1
Parachute	36320-7	36320-8	Air Force (16-foot)
Inside tube	X-015	X-017	
Shroud line support	20	3109-4-04	
Rear case extension	014	014	Same on both drops
Rear cap	014	014	Same on both drops
MC1835	UAA-00044-H3	UAA-00048-H3	Down-loaded to 90 grams

UNCLASSIFIED

[redacted]

Figure 1

Figure 2

[redacted] FIE

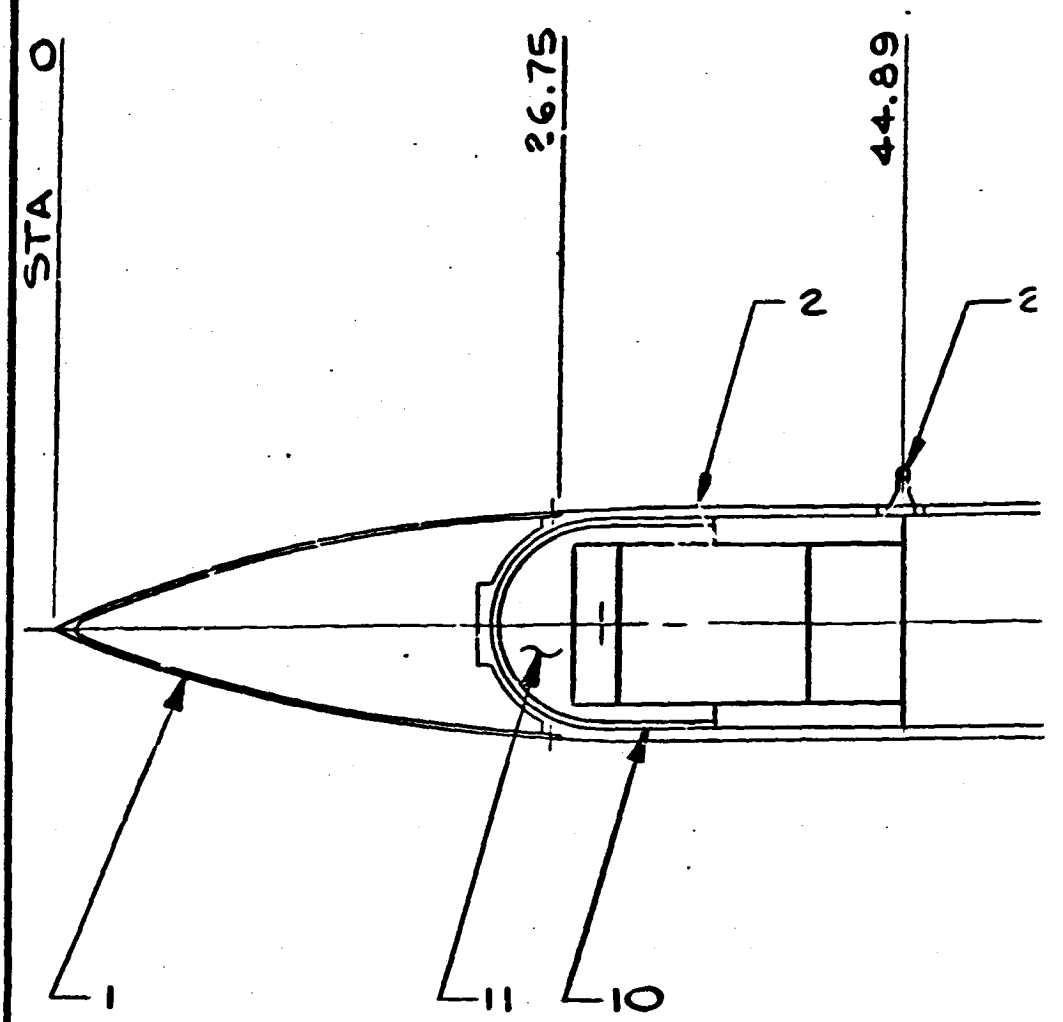

ITEM	TITLE
1	NOSE, RETARDED
2	CASE SECTION, CENTER
3	CASE SECTION, PRE-FLIGHT
4	CLAMP-AFT
5	CASE SECTION, REAR
6	CASE EXTENSION, REAR
7	CAP AND BOLT, REAR
8	FIN
9	GRILL (INSTALLED IN NORMAL POSIT
10	SPACER
11	FORWARD BALLAST (FORWARD PORT
12	TM PACKAGE
13	COVER PLATE
14	RING, EXTERNALLY THREADED
15	JUNCTION BOX (TEST)

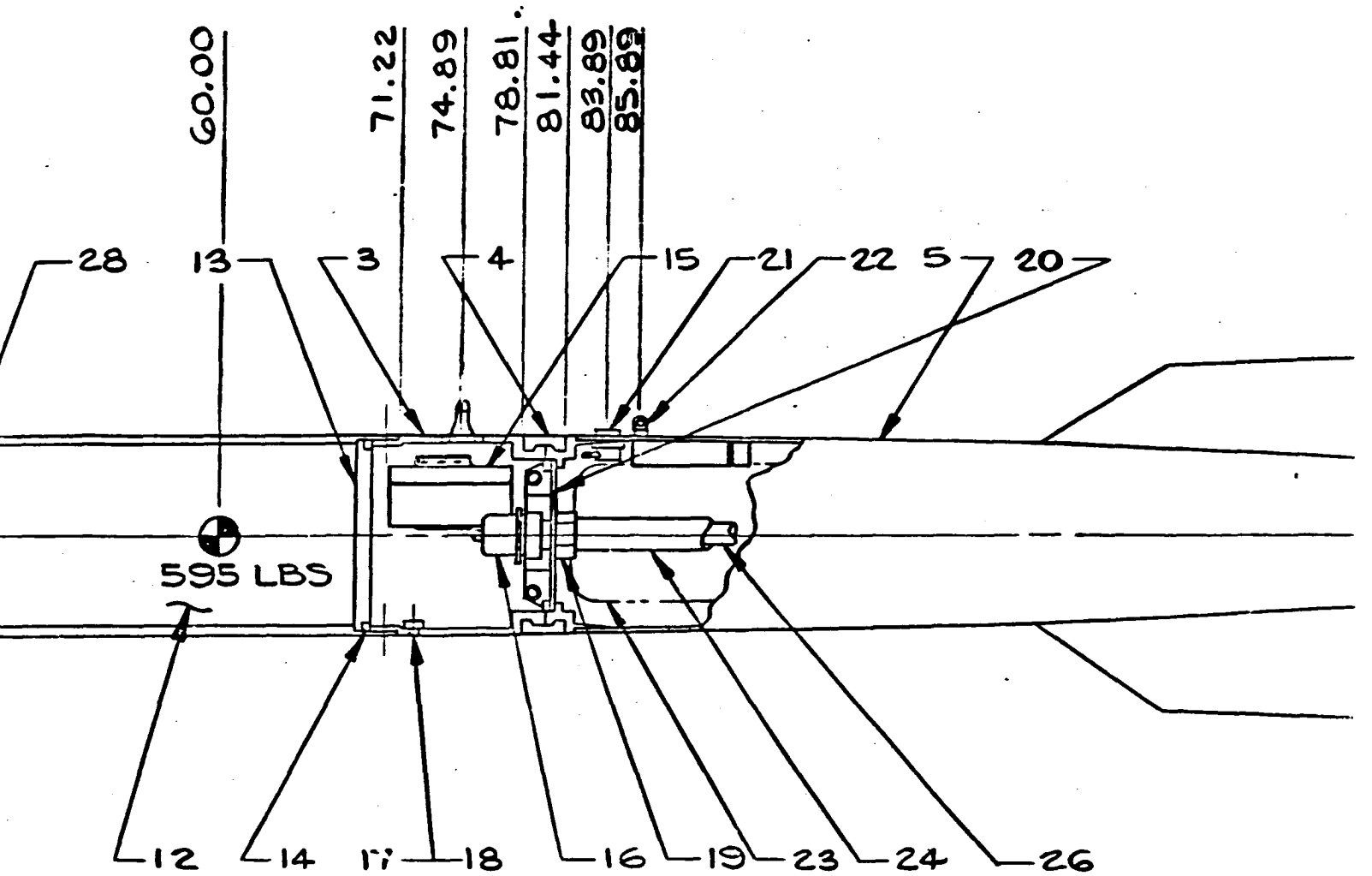

	NUMBER	ISSUE
	N 52866	2
	180388	6
T	186734	3
	186737	2
	180391	4 1/2
	180370	2
	186753	2
	186730	3
OSITION)	——	–
	N 52814	2
, PORTION)	N 52816	5
	N 59546	–
	186732	5
DED	186733	2

W.O.#59094

REVISIONS				
ISS	DESCRIPTION PREPARED BY	DATE	CHKR	ENGR
1	GRAU, J.W. 4412-5	11-21-63		F
2	MINOR REVISIONS ALVINO, 4412-5	11-26-63		F

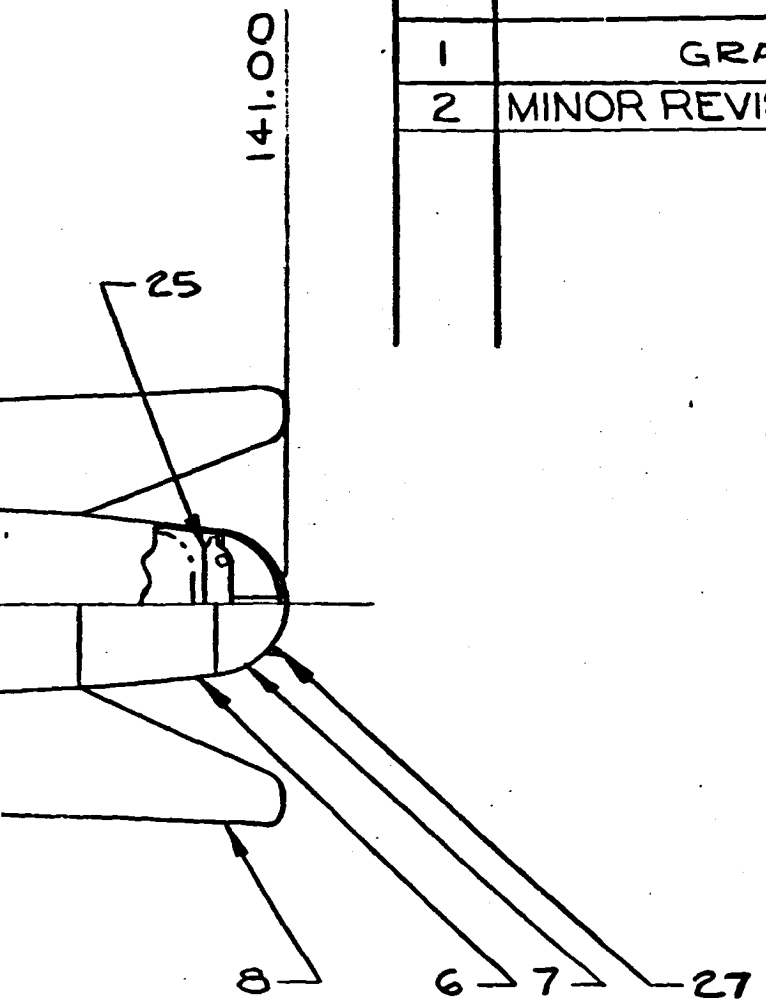

DWG. NO. N60437

ITEM	TITLE
1	NOSE, RETARDED
2	CASE SECTION, CENTER
3	CASE SECTION, PRE-FLIGHT
4	CLAMP-AFT
5	CASE SECTION, REAR
6	CASE EXTENSION, REAR
7	CAP AND BOLT, REAR
8	FIN
9	GRILL (INSTALLED IN NORMAL POSITION
10	SPACER
11	FORWARD BALLAST (FORWARD PORTION)
12	TM PACKAGE
13	COVER PLATE
14	RING, EXTERNALLY THREADED
15	JUNCTION BOX (TEST)
16	XMC 1835 (GAS GENERATOR)
17	INSERT
18	PLUG AND SCREW
19	CUTTER MECHANISM-MODIFIED (8 CUT
20	SUPPORT, SHROUD LINE
21	CABLE ASSY (P/O)
22	PULSE INITIATOR (TEST) #1
23	PARACHUTE, 16'
24	TUBE-PLUG (OUTSIDE)
25	DEPLOYMENT PLATE
26	TUBE, ALUMINUM-INSIDE
27	TAIL EXT. SEPARATION FLASH INDICATOR
28	LUG, SUSPENSION

UNCLASSIFIED

12 14 17 18 16 19 23 24 26

	NUMBER	ISSUE
	N 52866	2
	180388	6
	186734	3
	186737	2
	180391	4 1/2
	180370	2
	186753	2
	186730	3
SITION)	——	–
	N 52814	2
PORTION)	N 52816	5
	N 59546	–
	186732	5
:D	186733	2
	N 52876	2
	311784	–
	186785	1
	186788	1
(8 CUTTERS)	——	–
	180372	5
	188923	2
	N 52849	2
	AF	–
	180363	2
	192125	2
	180361	3
DICATOR	——	–
	192132	1

DWG CLASSIFICATION LEVEL [redacted]

PART [redacted]

CLASSIFICATION CATEGORY [redacted]

ORG	DA
1513	

MFG	AC

8 6 7 27

Fig 3

PART CLASSIFICATION	SHEET 1	
[redacted]	ISSUE 2	
	SHEET INDEX	

ORG	DATE	INITIALS
1513		

MFG AGENCY APPROVALS		

TITLE
TX-61
BALLISTIC TEST UNIT
101-3

FIRST APPLICATION

SIZE C

MFG AGENCY NO.

DWG NO. N60437

SCALE 1/10

DOC. REF. SYM.

SHEET 1 OF 1

[redacted]

PRINTED IN U.S.A.

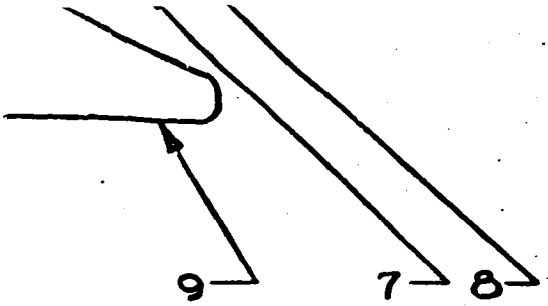

DWG. NO. N60482

PART CLASSIFICATION	SHEET 1	
[redacted]	ISSUE 1	
	SHEET INDEX	

G	DATE	INITIALS
3		
12		

FG AGENCY APPROVALS		

TITLE	FIRST APPLICATION
TX-61 BALLISTIC TEST UNIT 101-4	SIZE C
MFG AGENCY NO.	DWG NO. N60482
SCALE 1/10 DOC. REF. SYM.	SHEET 1 OF 1

TIC
ON

PRINTED IN U.S.A.

UNCLASSIFIED

[redacted]

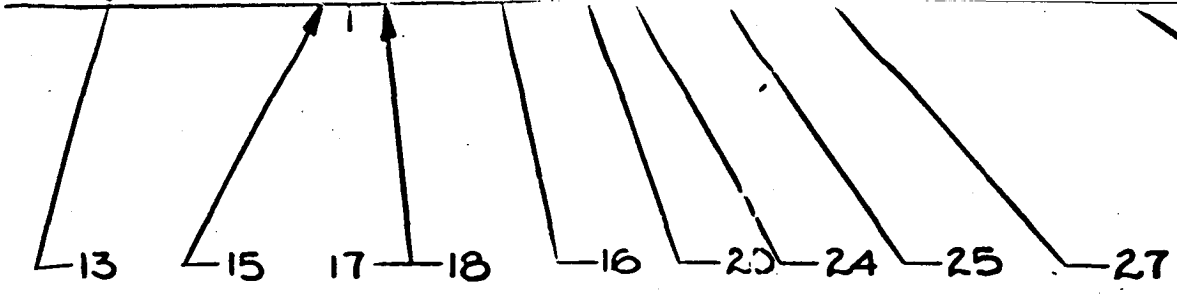

NUMBER	ISSUE
192148	2
186735	5
180388	6
186734	3
186737	2
180391	4 1/2
180370	2
186753	2
186730	3
ION) ———	-
ON) N52816	5
N52814	2
N59546	-
186732	5
186733	2
311784	-
186785	1
186788	1
N54857	2
TTERS) ———	-
180372	5
188923	2
BX	-
AF	-
180363	2
192125	2
180361	3
192132	1

DWG CLASSIFICATION LEVEL [redacted]

PART [redacted]

CLASSIFICATION CATEGORY [redacted]

ORG 1513

4412

MFG AC

GROUP 1 – EXCLUDED FROM AUTOMATIC DOWNGRADING AND DECLASSIFICATION

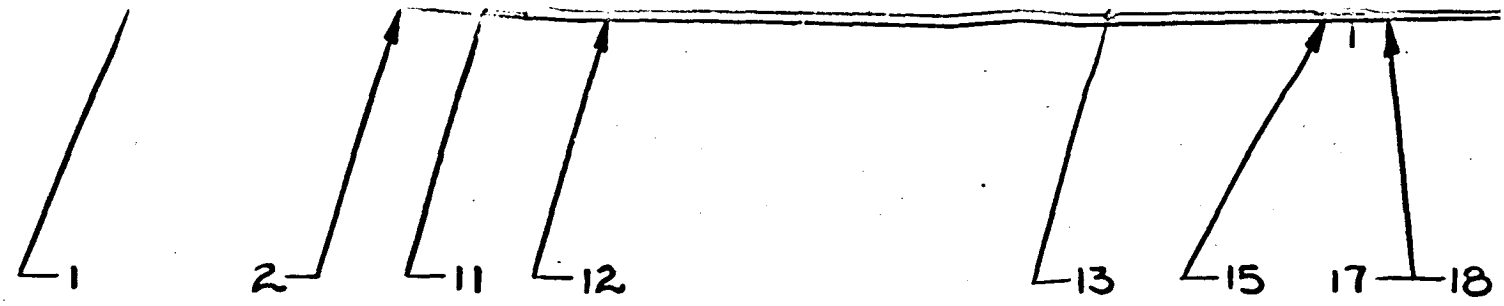

ITEM	TITLE	NUMBER	ISSUE
1	CASE SECTION, NOSE	192148	2
2	CASE EXTENSION, NOSE	186735	5
3	CASE SECTION, CENTER	180388	6
4	CASE SECTION, PREFLIGHT	186734	3
5	CLAMP-AFT	186737	2
6	CASE SECTION, REAR	180391	4 1/2
7	CASE EXTENSION, REAR	180370	2
8	CAP AND BOLT, REAR	186753	2
9	FIN	186730	3
10	GRILL (INSTALLED IN NORMAL POSITION)	———	-
11	FORWARD BALLAST (FORWARD PORTION)	N52816	5
12	SPACER	N52814	2
13	TM PACKAGE	N59546	-
14	COVER PLATE	186732	5
15	RING, EXTERNALLY THREADED	186733	2
16	XMC 1835 (GAS GENERATOR)	311784	-
17	INSERT	186785	1
18	PLUG AND SCREW	186788	1
19	JUNCTION BOX, UNIVERSAL (BTS)	N54857	2
20	CUTTER MECHANISM-MODIFIED (8 CUTTERS)	———	-
21	SUPPORT, SHROUD LINE	180372	5
22	CABLE ASSY (P/O)	188923	2
23	PULSE ACTUATOR, PROP. NO. 5	BX	-
24	PARACHUTE, 16'	AF	-
25	TUBE-PLUG (OUTSIDE)	180363	2
26	DEPLOYMENT PLATE	192125	2
27	TUBE, ALUMINUM-INSIDE	180361	3
28	LUG, SUSPENSION	192132	1

UNCLASSIFIED

W.O. 59094

REVISIONS				
ISS	DESCRIPTION	DATE	CH'CK	ENGR
1	DORNEMAN, E. PREPARED BY 4412-5	1-2-64		

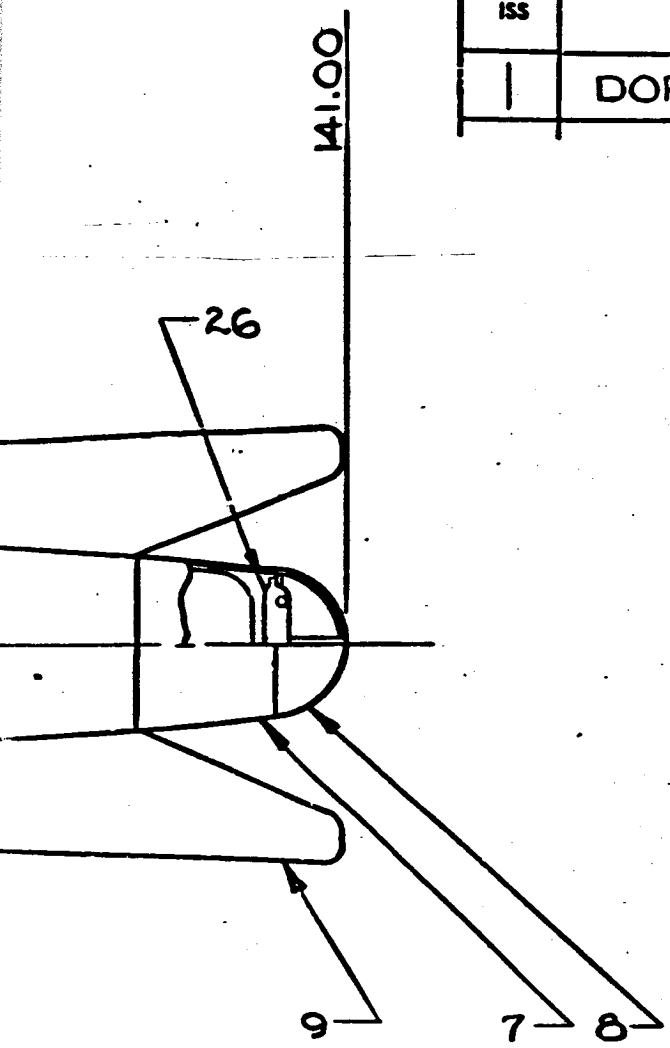

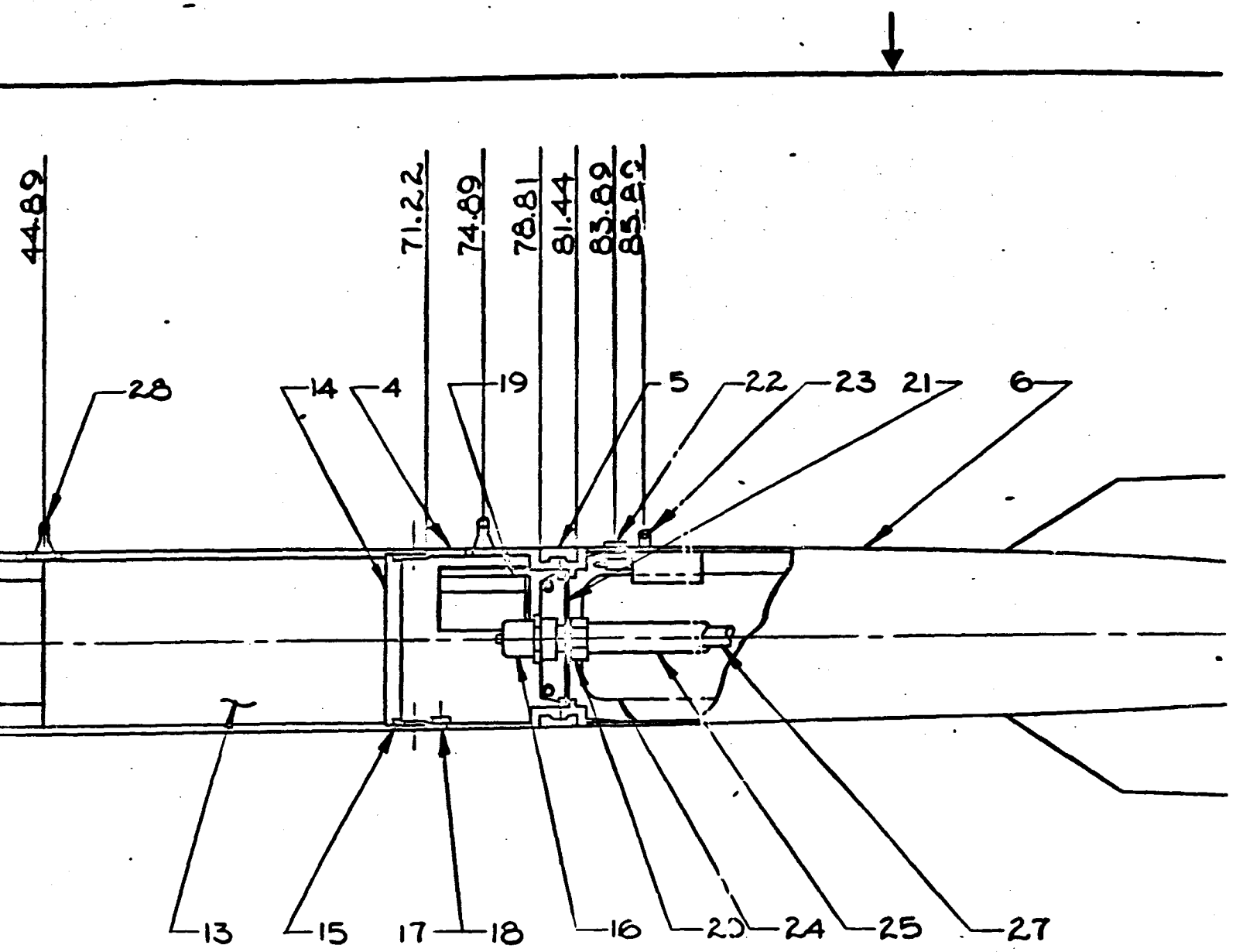

	NUMBER	ISSUE
	192148	2
	186735	5
	180388	6
	186734	3
	186737	2
	180391	4 1/2
	180370	2
	186753	2
	186730	3
POSITION)	———	–
) PORTION)	N52816	5
	N52814	2
	N59546	–
	186732	5
D	186733	2

[redacted]

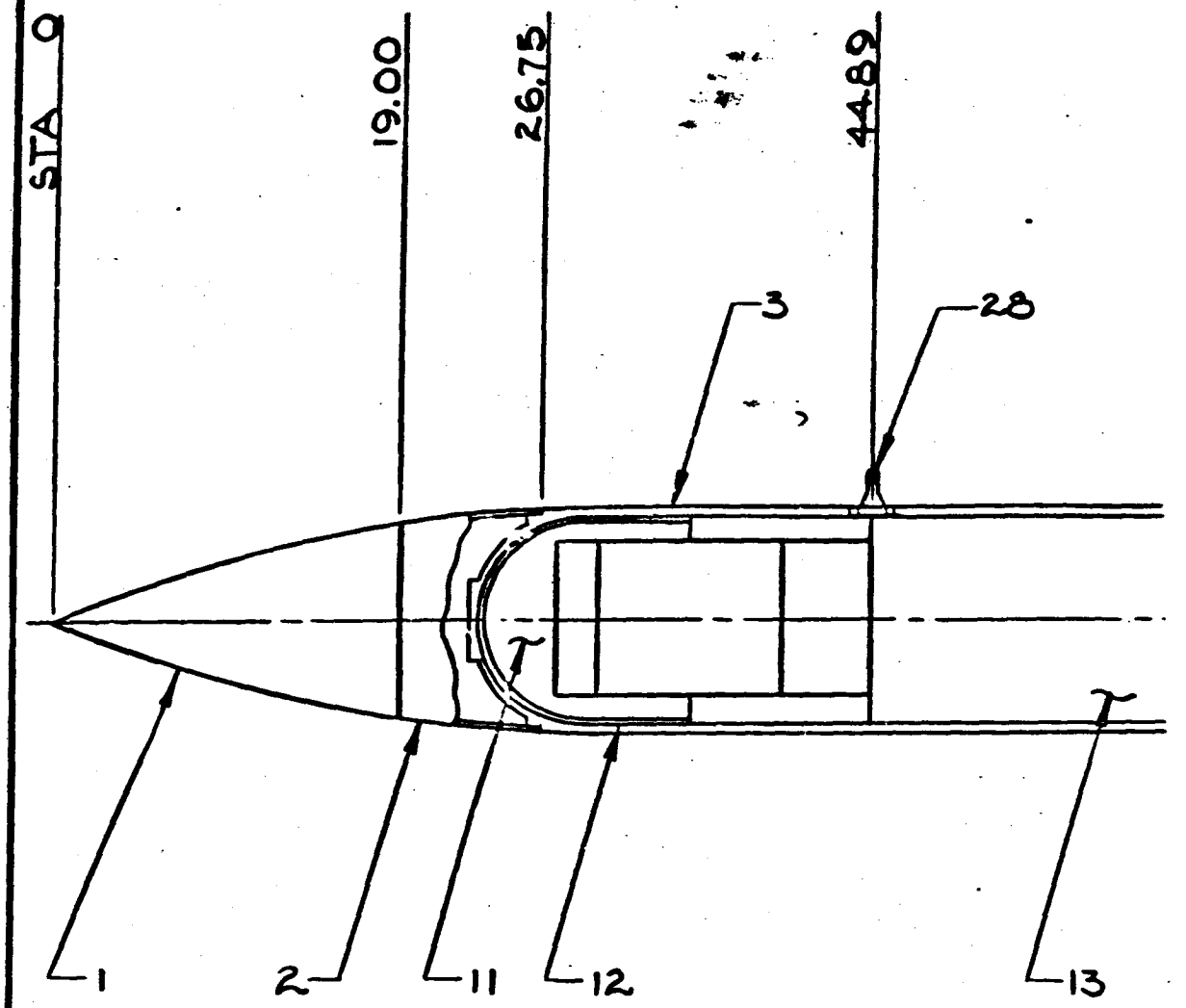

ITEM	TITLE	NUM
1	CASE SECTION, NOSE	1921
2	CASE EXTENSION, NOSE	1867
3	CASE SECTION, CENTER	180
4	CASE SECTION, PREFLIGHT	186
5	CLAMP-AFT	186
6	CASE SECTION, REAR	180
7	CASE EXTENSION, REAR	180
8	CAP AND BOLT, REAR	186
9	FIN	1867
10	GRILL (INSTALLED IN NORMAL POSITION)	——
11	FORWARD BALLAST (FORWARD PORTION)	N52
12	SPACER	N52
13	TM PACKAGE	N59
14	COVER PLATE	

DWG CLASSIFICATION LEVEL **UNCLASSIFIED**	PART CLASSIFICATION	SHEET 1 / ISSUE 1 — SHEET INDEX	
CLASSIFICATION CATEGORY	ORG / DATE / INITIALS	TITLE SCHEMATIC, 103 DEPLOYMENT SYSTEM	FIRST APPLICATION
			SIZE D
	MFG AGENCY APPROVALS	MFG AGENCY NO.	DWG NO. N62960
		SCALE NONE / DOC. REF. SYM.	SHEET 1 OF 1

DWG. NO. N62960

Figure 3

UNCLASSIFIED

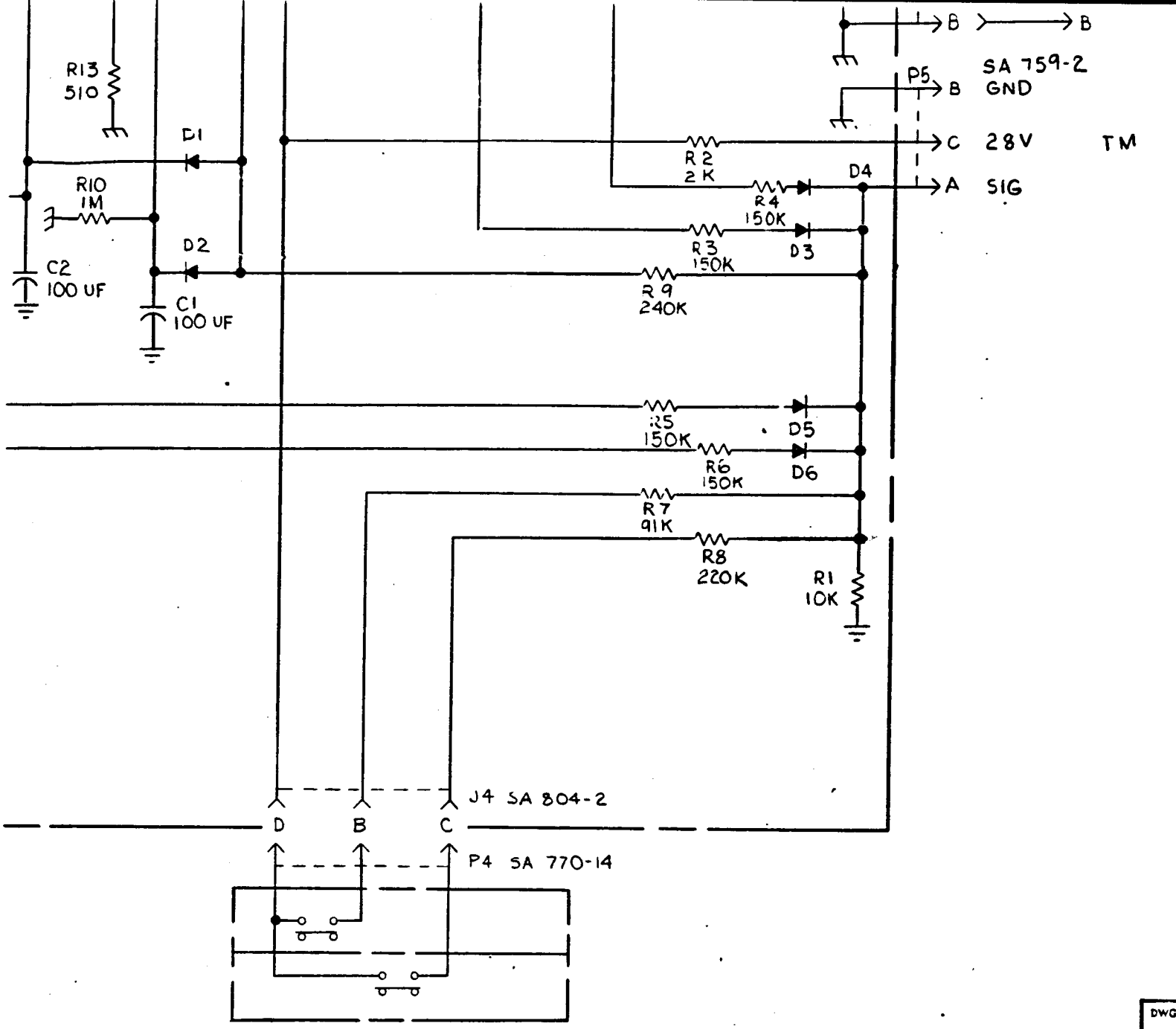
R13
510
D1
R10
1M
D2
C2
100 UF
C1
100 UF
R2
2 K
R4
150K
D4
R3
150K
D3
R9
240K
R5
150K
D5
R6
150K
D6
R7
91K
R8
220K
R1
10K
B
B
P5
B
SA 759-2
GND
C
28V
A
SIG
TM
J4 SA 804-2
D
B
C
P4 SA 770-14

6 5 4

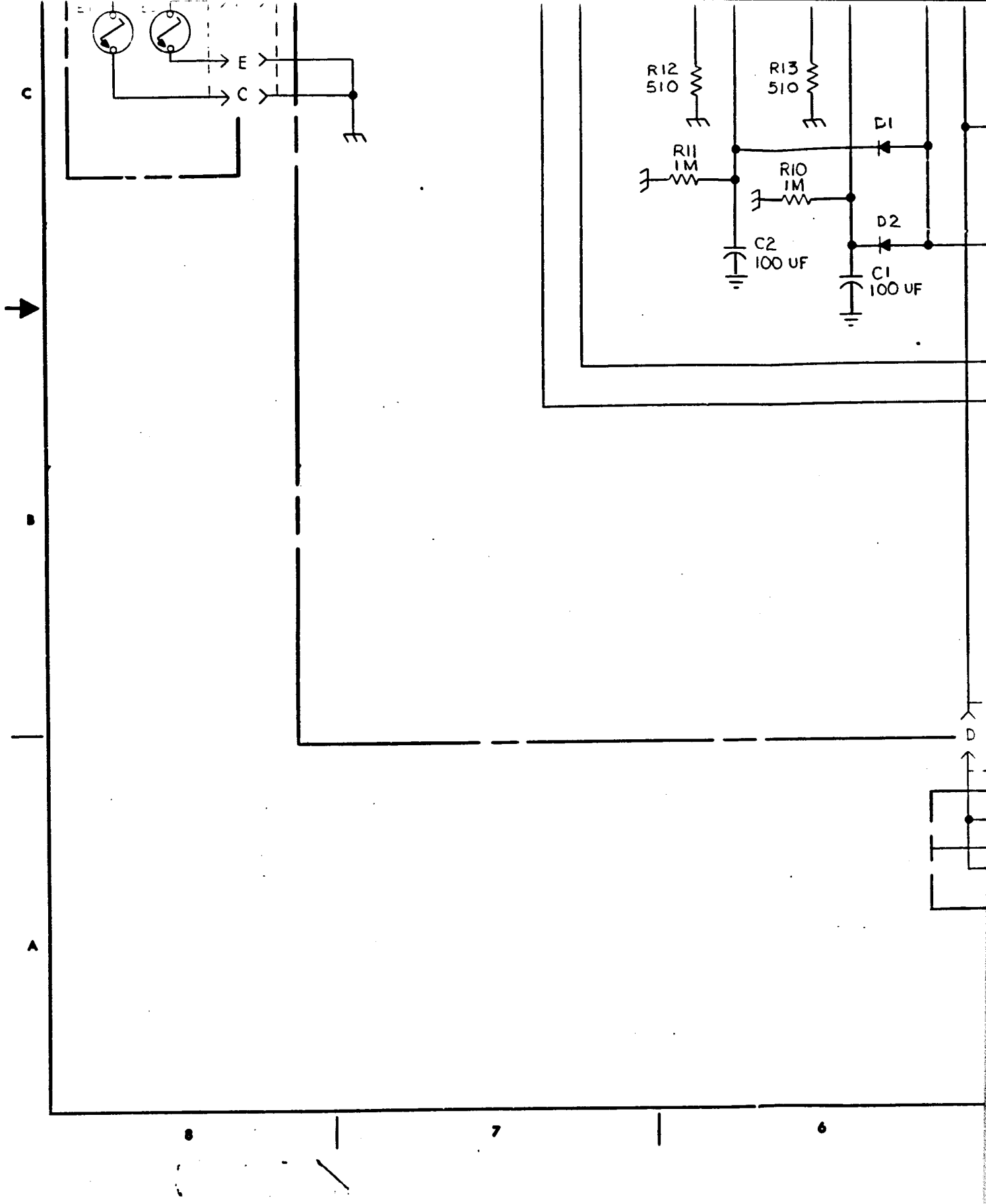
E
C
R12
510
R13
510
D1
R11
1M
R10
1M
D2
C2
100 UF
C1
100 UF
D
C
B
A
8
7
6

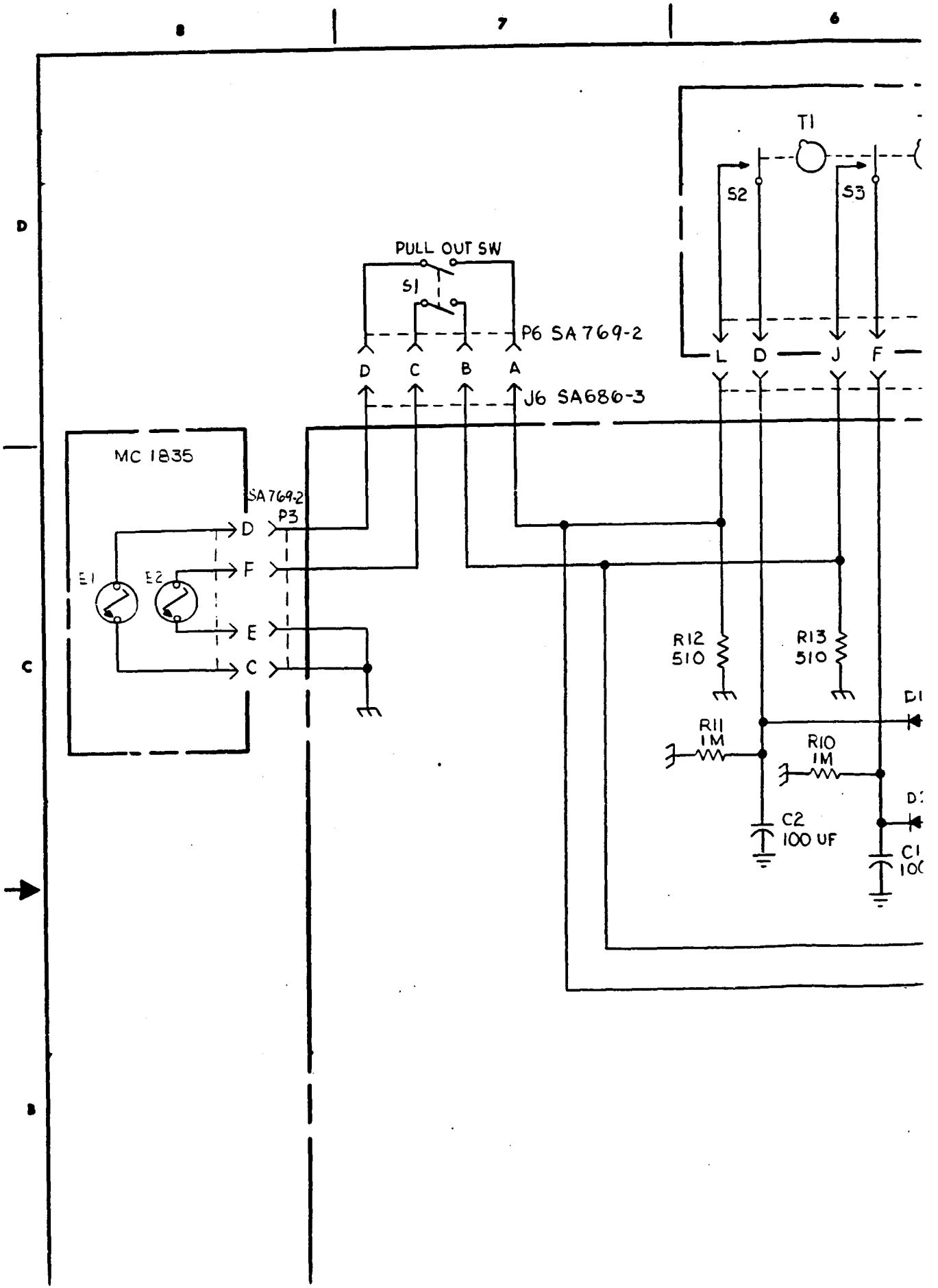
8
7
6
D
C
B
T1
S2
S3
PULL OUT SW
S1
P6 SA769-2
D C B A
J6 SA686-3
L D J F
MC 1835
SA769-2
P3
D
F
E
C
E1
E2
R12
510
R13
510
R11
1M
R10
1M
C2
100 UF

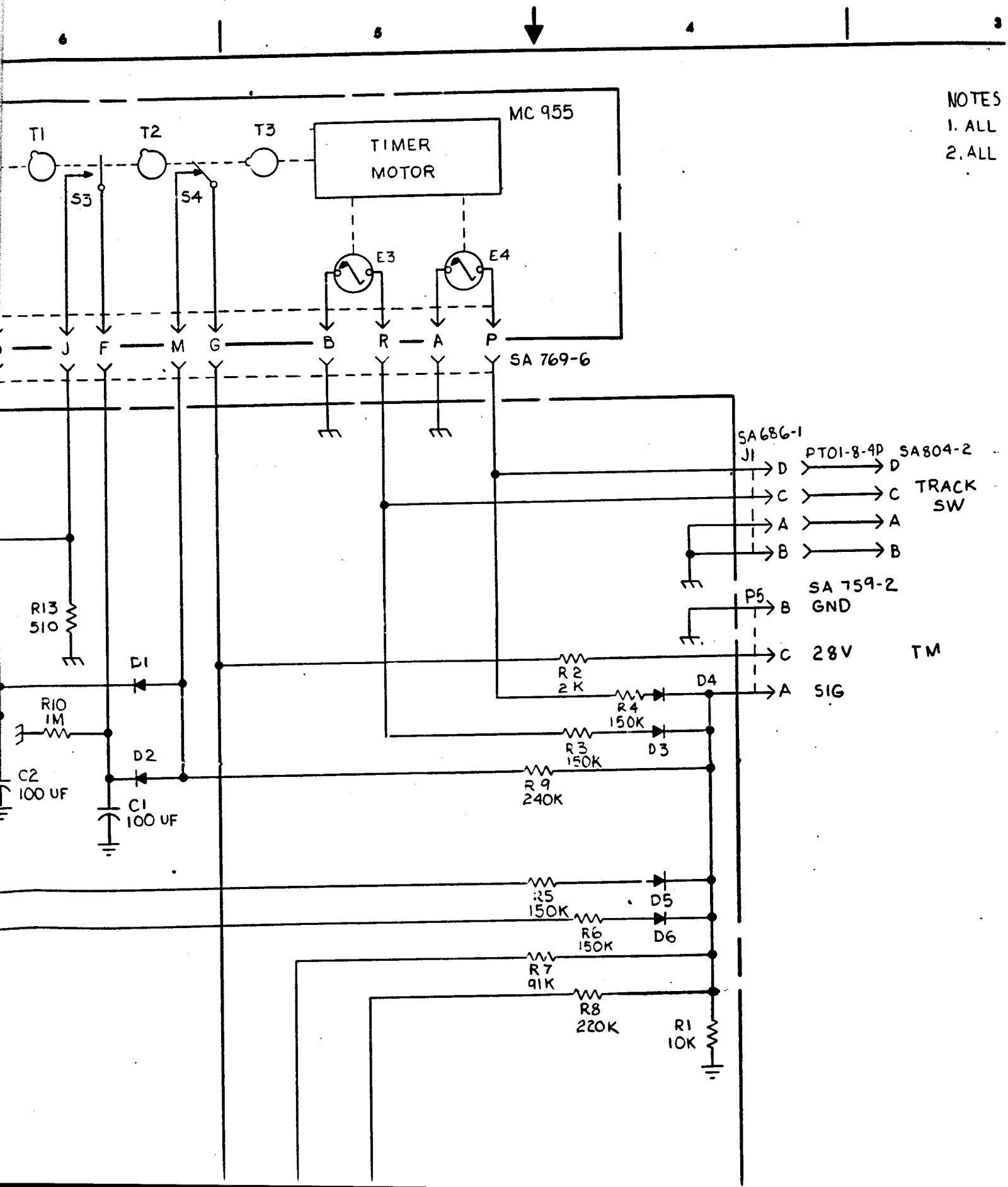
6
5
4
3
NOTES
1. ALL
2. ALL
MC 955
TIMER
MOTOR
T1
T2
T3
S3
S4
E3
E4
J
F
M
G
B
R
A
P
SA 769-6
SA686-1
J1
PT01-8-4P
SA804-2
D
C
A
B
TRACK
SW
P5
SA 759-2
GND
28V
TM
SIG
R13
510
D1
R10
1M
D2
C2
100 UF
C1
100 UF
R2
2K
R4
150K
D4
R3
150K
D3
R9
240K
R5
150K
D5
R6
150K
D6
R7
91K
R8
220K
R1
10K

3	2	1

NOTES

1. ALL RESISTORS ARE ½ WATT
2. ALL DIODES ARE IN457

REVISIONS

RS	ZONE	DESCRIPTION PREPARED BY	DATE	CHKR	ENGR
1		CAMPBELL, K.A., 4413-4	1/21/64		

D

8-4P SA804-2
→ D
→ C TRACK SW
→ A
→ B
59-2

C

TM

B

62960

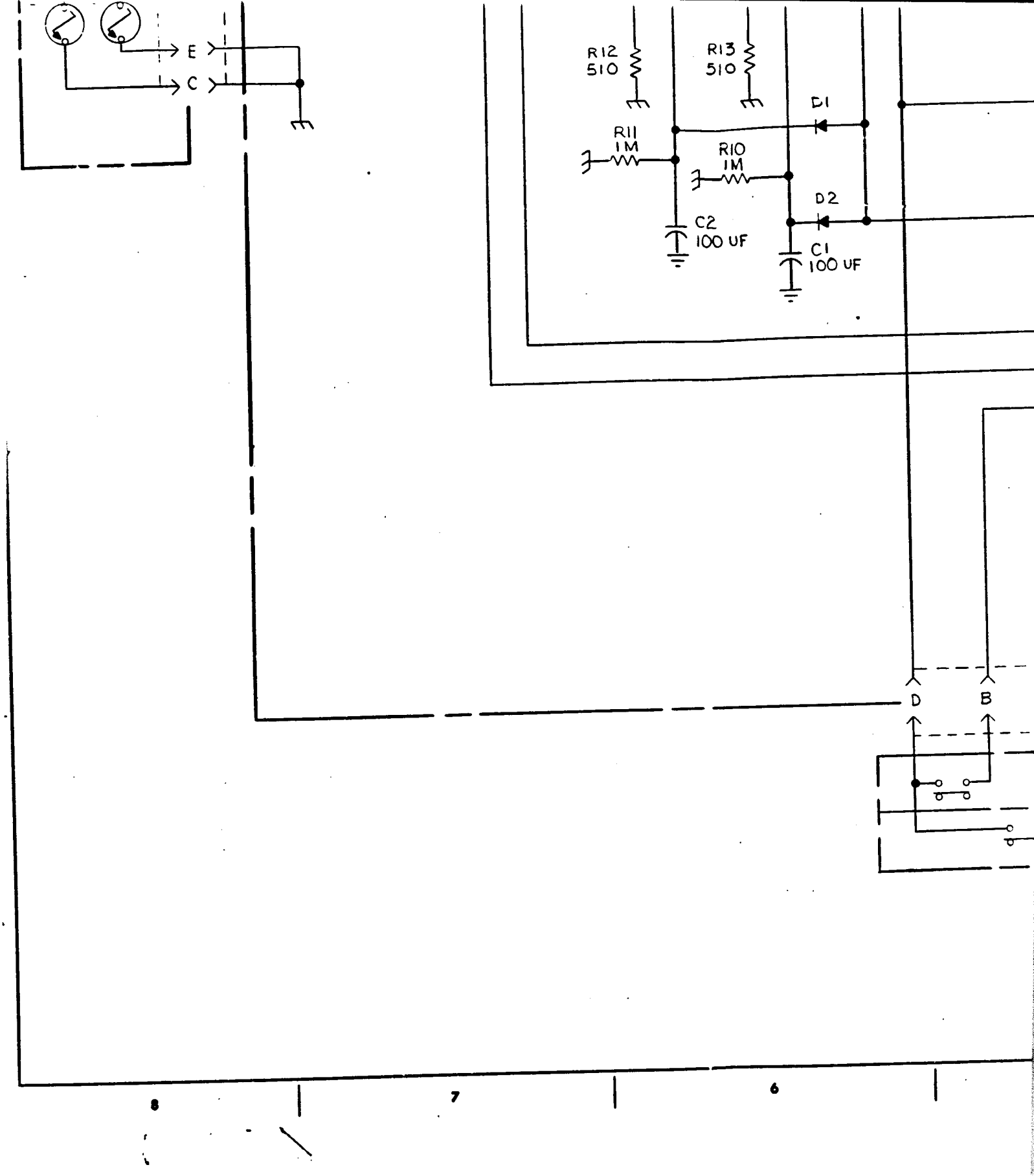
E
C
R12
510
R13
510
D1
R11
1M
R10
1M
D2
C2
100 UF
C1
100 UF
D
B
8
7
6

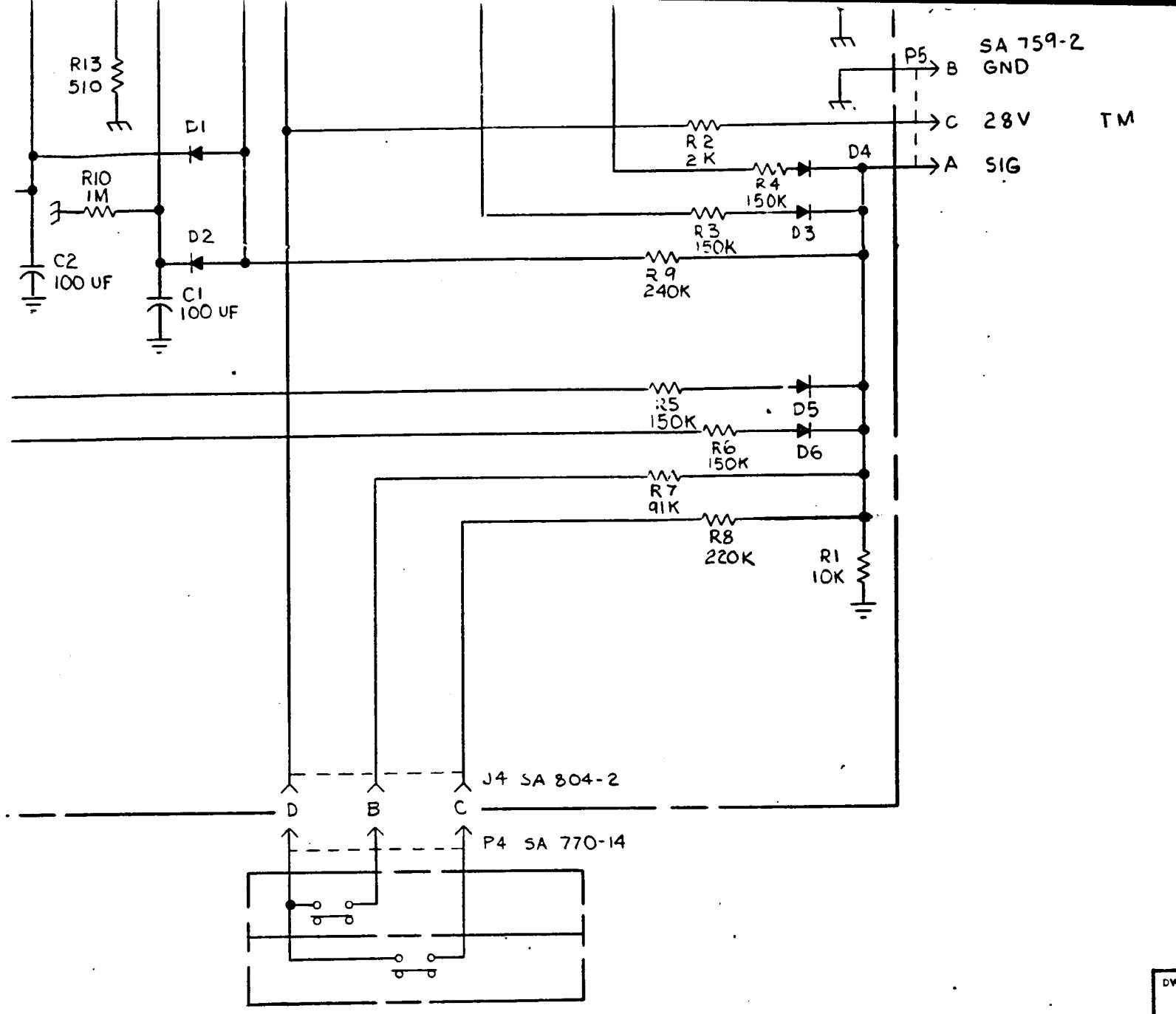
R13
510
D1
R10
1M
D2
C2
100 UF
C1
100 UF
P5
SA 759-2
B
GND
C
28V
TM
A
SIG
R2
2K
D4
R4
150K
R3
150K
D3
R9
240K
R5
150K
D5
R6
150K
D6
R7
91K
R8
220K
R1
10K
J4 SA 804-2
D
B
C
P4 SA 770-14

6 5 4

DWG CLASSIFICATION LEVEL **UNCLASSIFIED**	PART CLASSIFICATION	SHEET 1 / ISSUE 1 — SHEET INDEX	
CLASSIFICATION CATEGORY	ORG / DATE / INITIALS	TITLE SCHEMATIC, 103 DEPLOYMENT SYSTEM	FIRST APPLICATION / SIZE D
	MFG AGENCY APPROVALS	MFG AGENCY NO.	DWG NO. N62960
		SCALE NONE / DOC. REF. SYM.	SHEET 1 OF 1

DWG. NO. N62960

Figure 3

UNCLASSIFIED

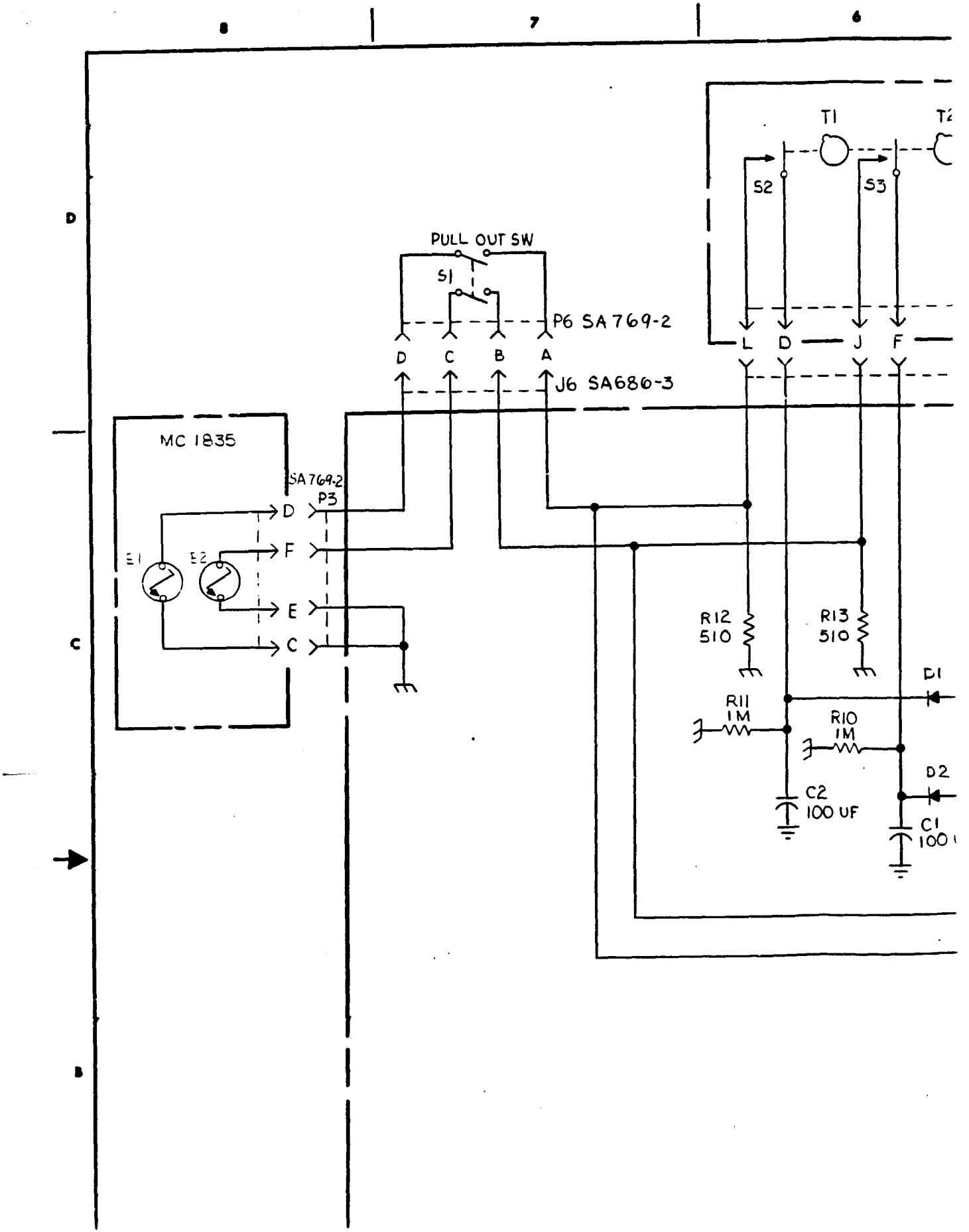
8
7
6
D
C
B
T1
S2
S3
PULL OUT SW
S1
P6 SA769-2
D C B A
J6 SA686-3
L D J F
MC 1835
SA769-2
P3
D
F
E
C
E1
E2
R12
510
R13
510
D1
R11
1M
R10
1M
D2
C2
100 UF
C1

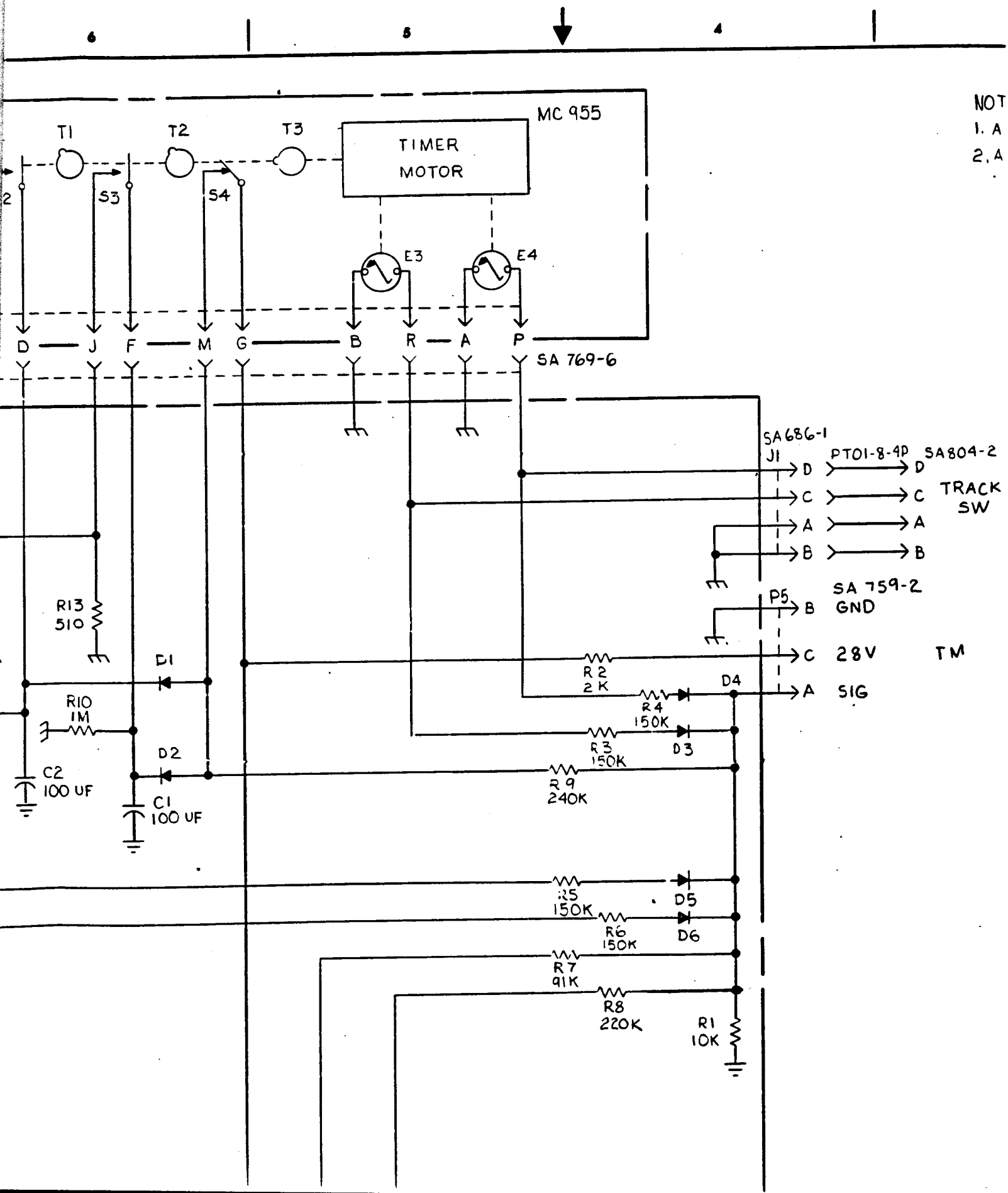
6
5
4
MC 955
TIMER
MOTOR
T1
T2
T3
S3
S4
E3
E4
D
J
F
M
G
B
R
A
P
SA 769-6
SA686-1
J1
PT01-8-4P
SA804-2
TRACK
SW
P5
SA 759-2
GND
28V
TM
SIG
R13
510
D1
R10
1M
D2
C2
100 UF
C1
100 UF
R2
2K
R4
150K
D4
R3
150K
D3
R9
240K
R5
150K
D5
R6
150K
D6
R7
91K
R8
220K
R1
10K

NOT
1. A
2. A

3 2 1

NOTES

1. ALL RESISTORS ARE ½ WATT
2. ALL DIODES ARE IN457

REVISIONS					
RIS	ZONE	DESCRIPTION PREPARED BY	DATE	CHKD	ENGR
1		CAMPBELL, K.A., 4413-4	1/21/64		[illegible]

D

C

B

3-4P SA804-2

→ D

→ C TRACK SW

→ A

→ B

59-2

TM

162960

K+E 10 X 10 TO THE CM 359 14

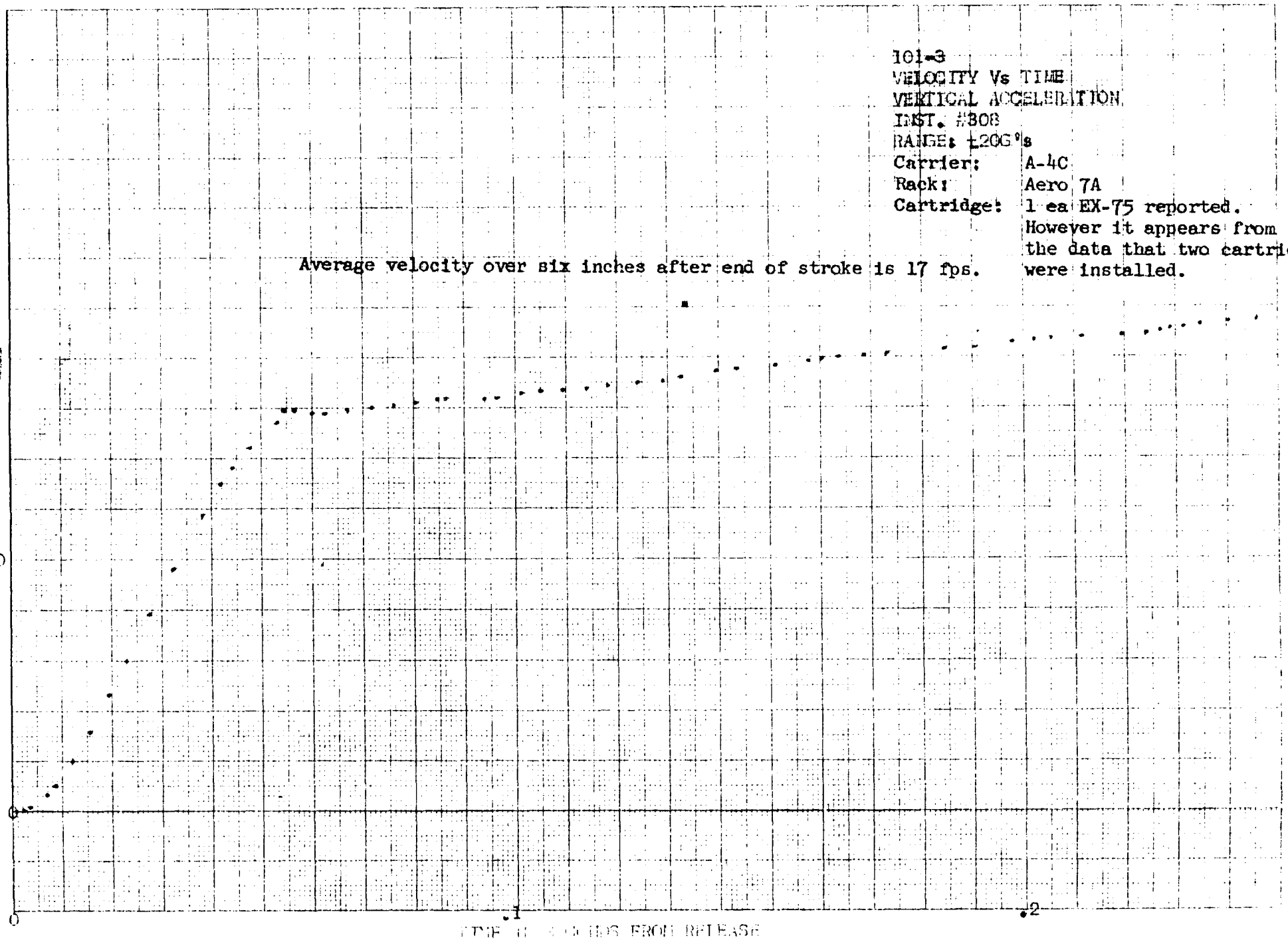

[redacted]

[redacted]

Figure 7

K+E 10 X 10 TO THE CM 359 14

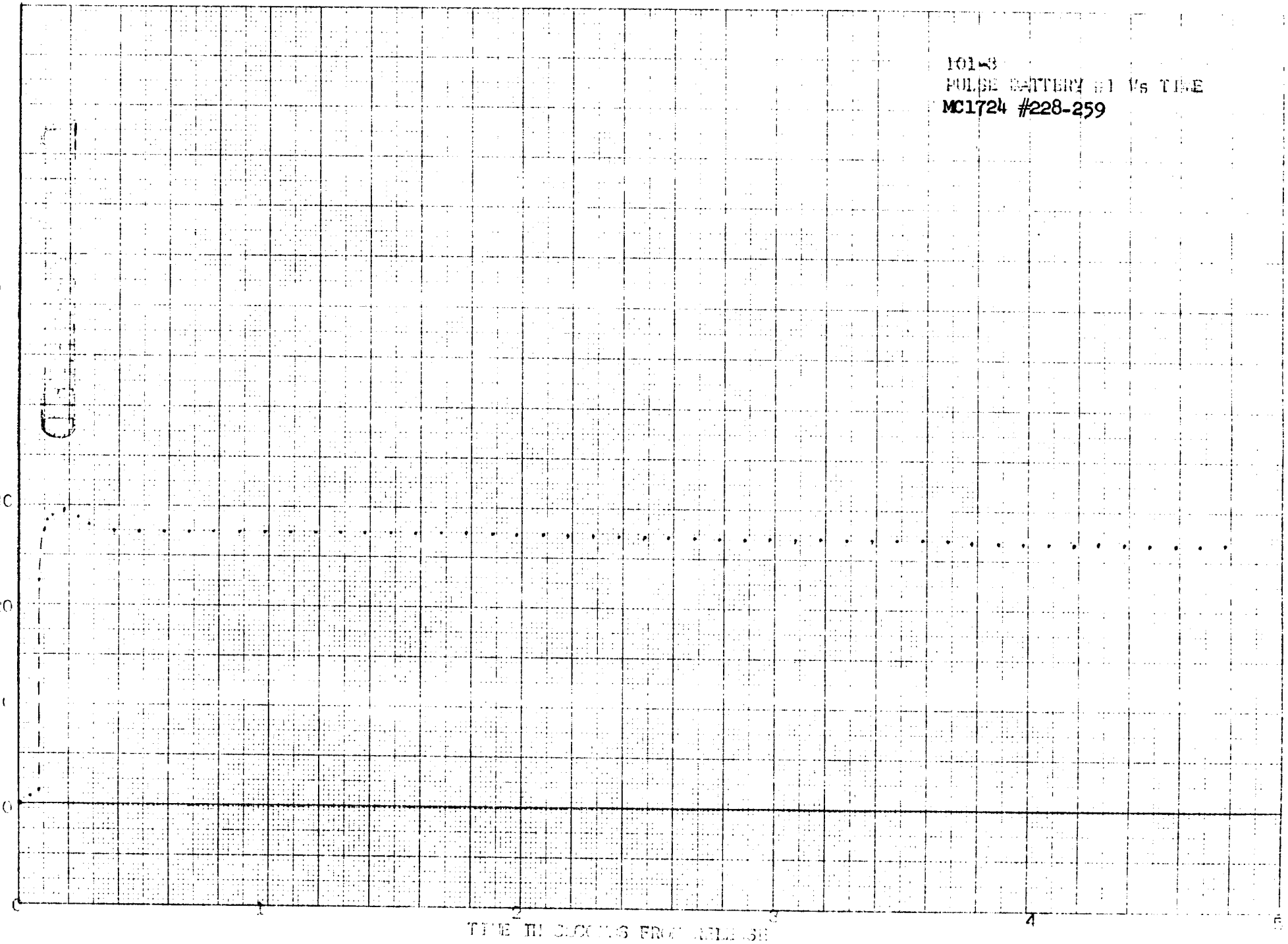

Figure 8

UNCLASSIFIED

K+E 10 X 10 TO THE CM. 359 14
KEUFFEL & ESSER CO. MADE IN U.S.A.

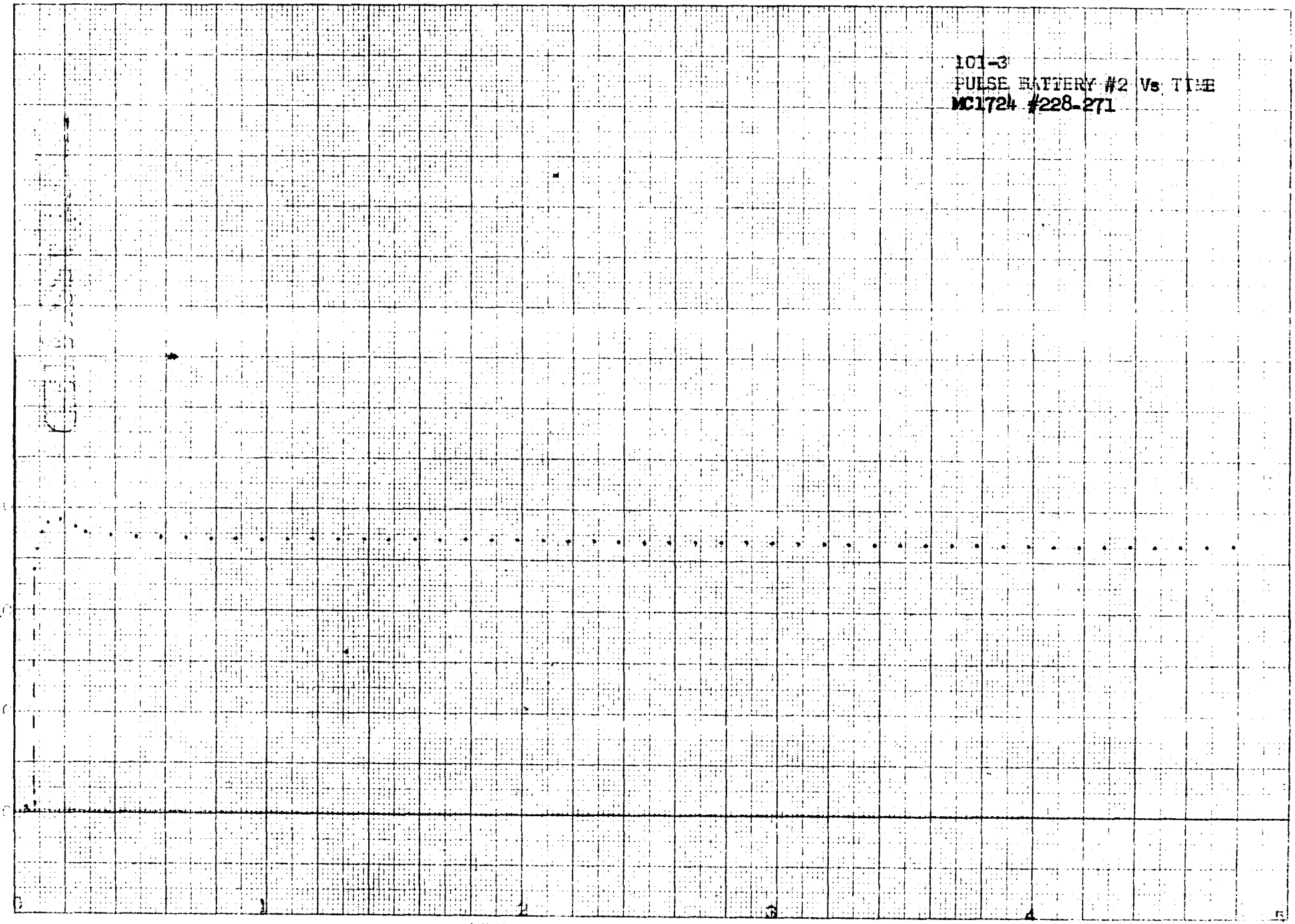

Figure 9

DECLASSIFIED

K+E 10 X 10 TO THE CM 359 14
KEUFFEL & ESSER CO. MADE IN U.S.A.

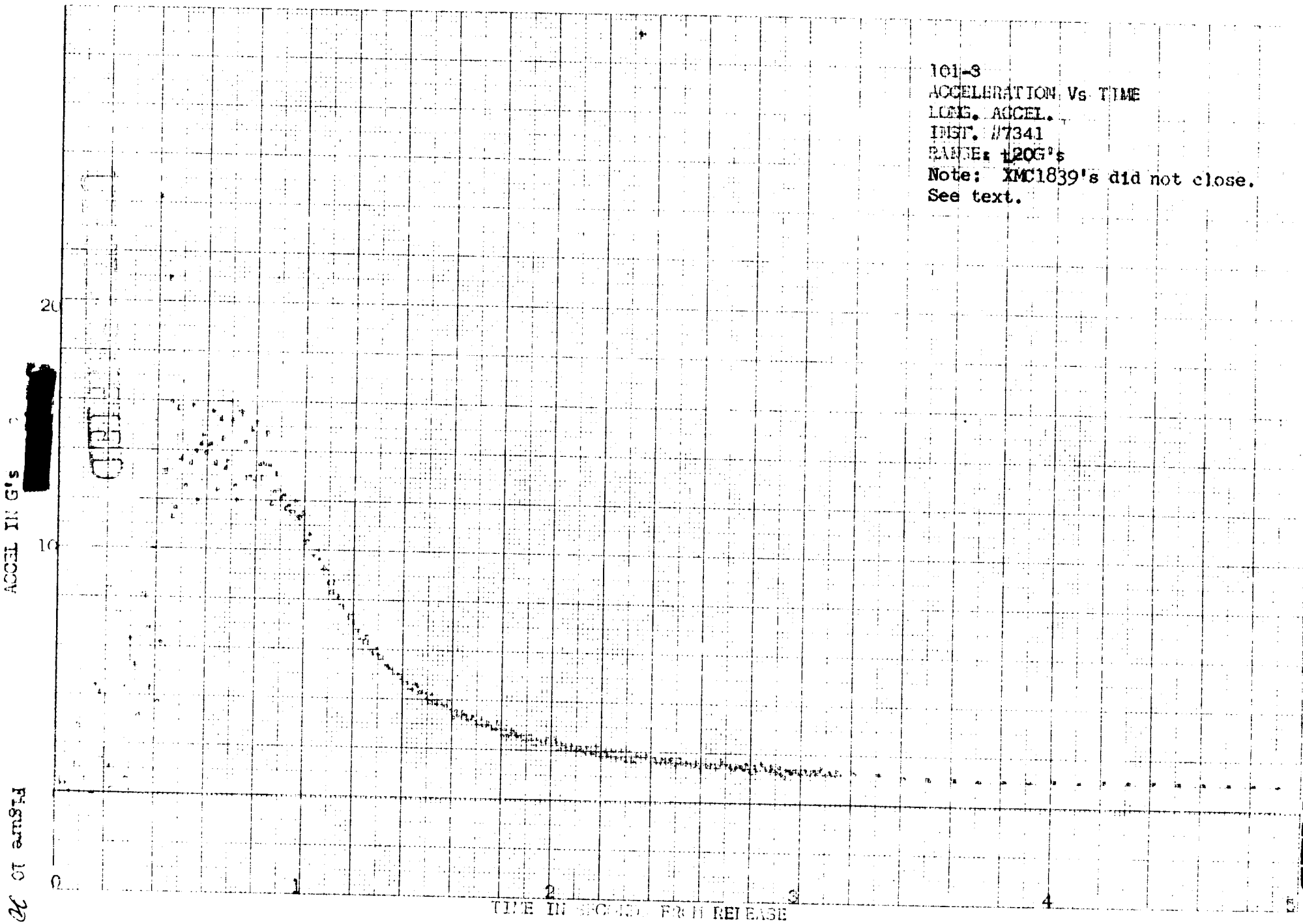

UNCLASSIFIED

Figure 10

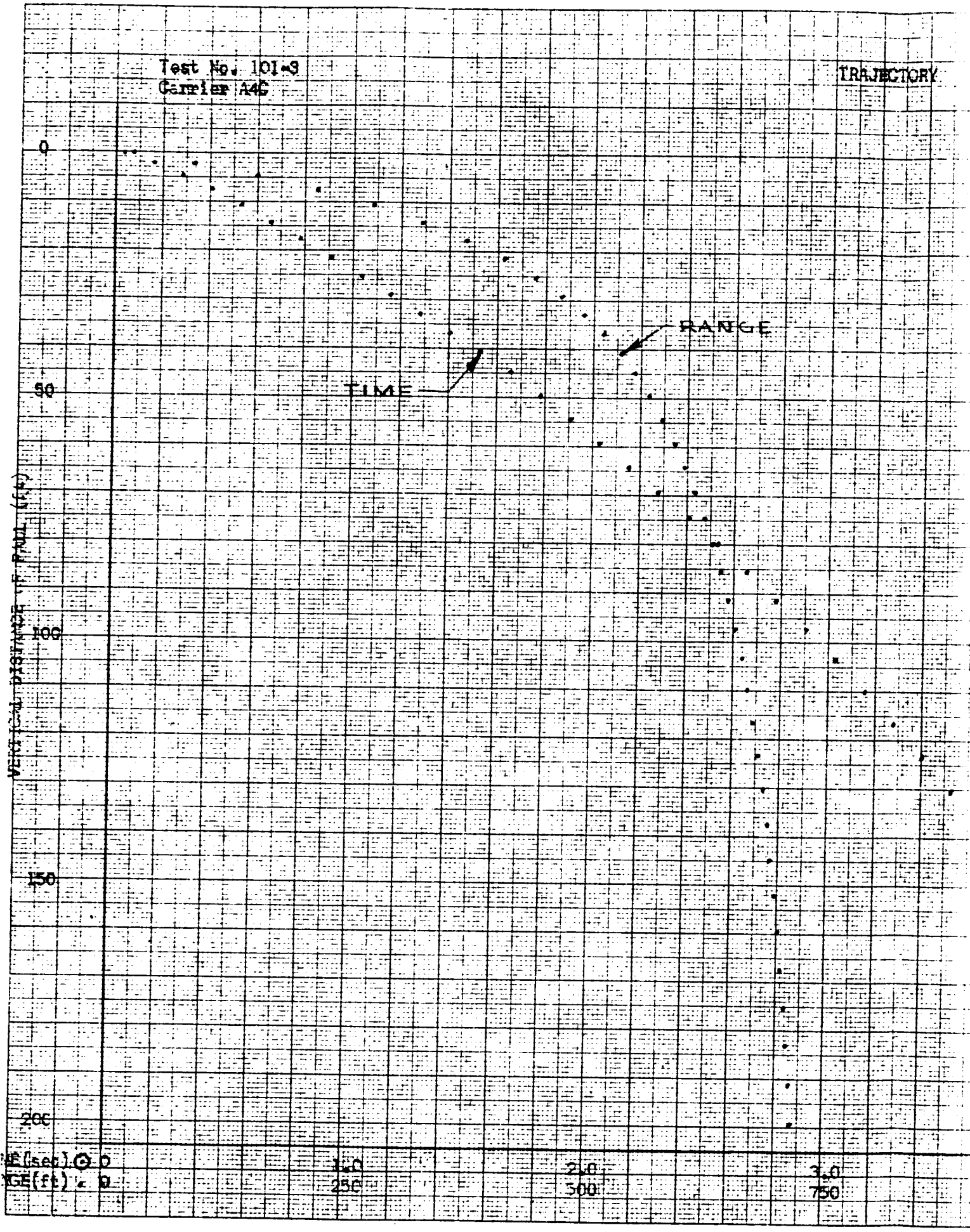

UNCLASSIFIED

[redacted] UNCLASSIFIED

TORY

Instrumentation
4 Cinetheodolites

4.0
1000

5.0
1250

6.0
1500

7.0
1750

[redacted]

Figure 11 21

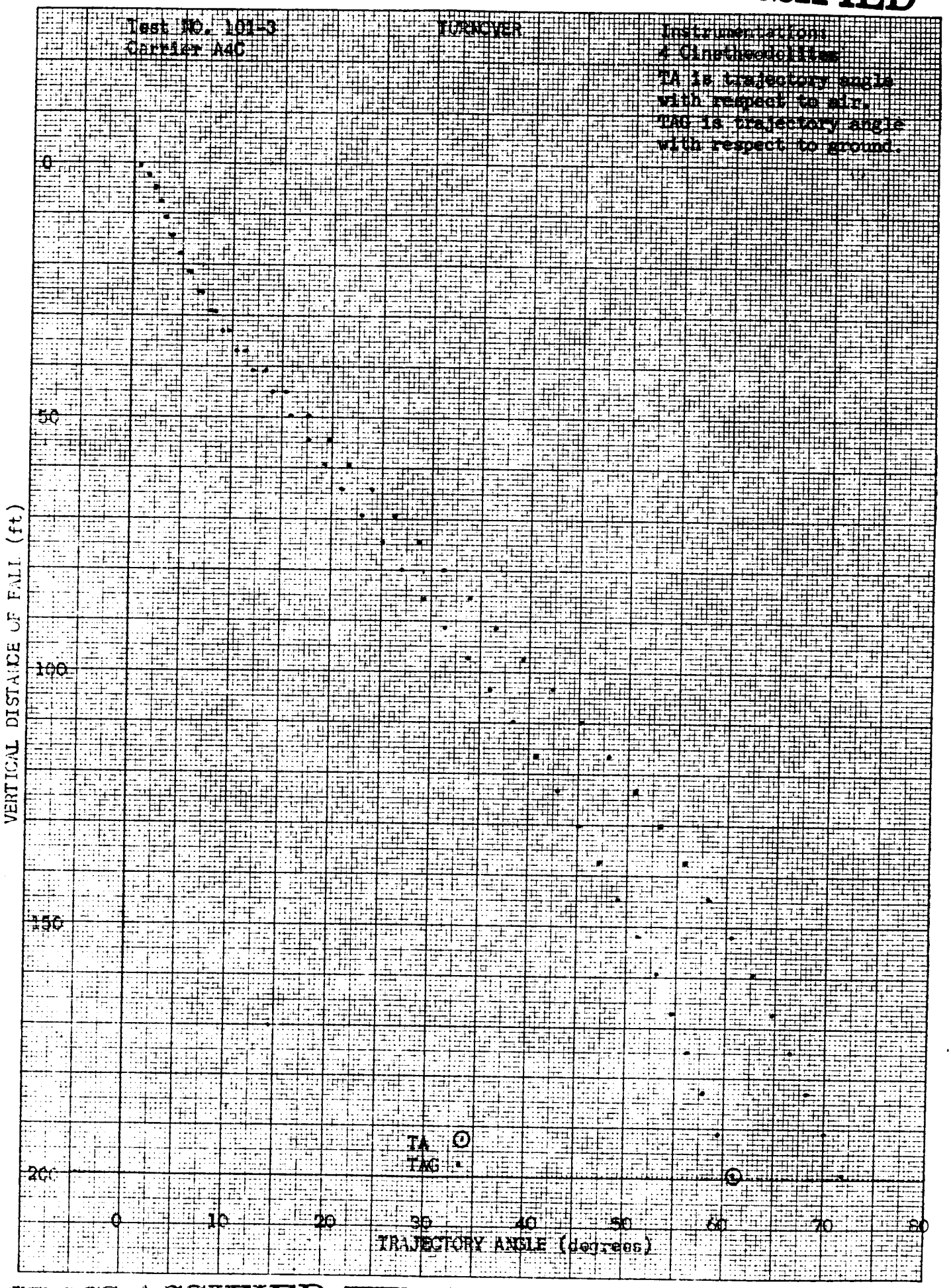
Test NO. 101-3
Carrier A4C
TURNOVER
Instrumentation:
4 Cinetheodolites
TA is trajectory angle with respect to air.
TAG is trajectory angle with respect to ground.
VERTICAL DISTANCE OF FALL (ft)
0
50
100
150
200
TA
TAG
0
10
20
30
40
50
60
70
80
TRAJECTORY ANGLE (degrees)

Figure 12

[redacted] UNCLASSIFIED

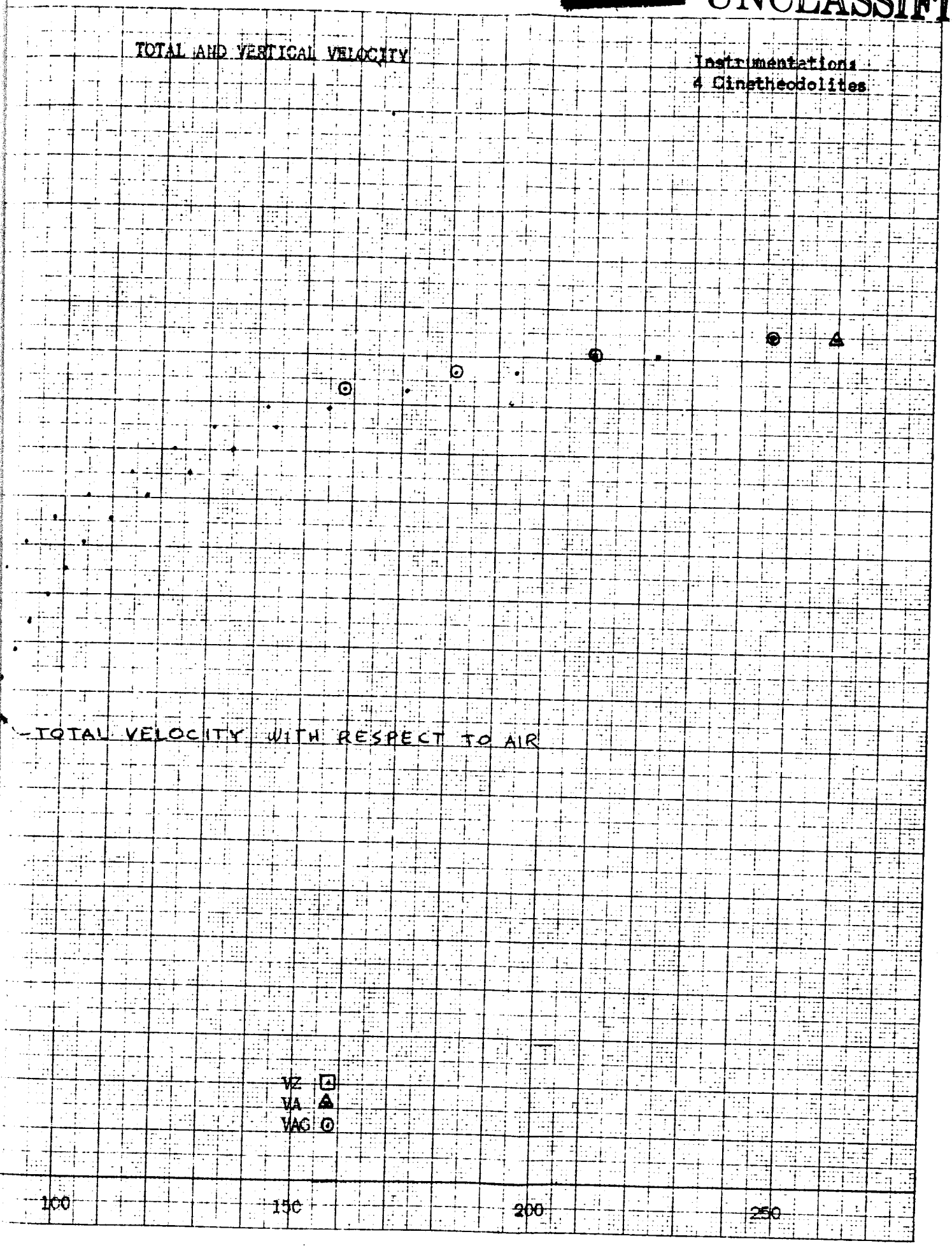

[redacted]

Figure 132

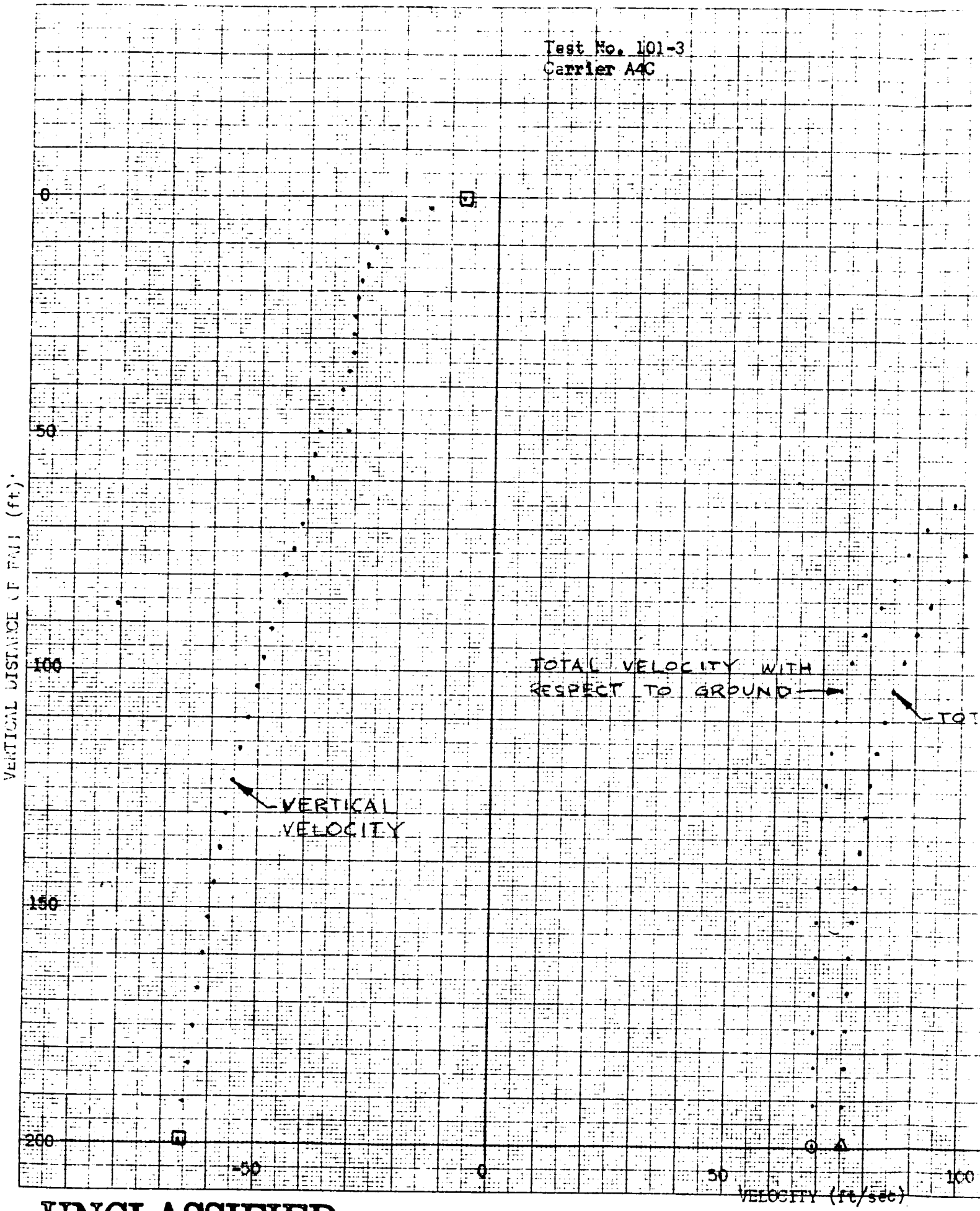

UNCLASSIFIED

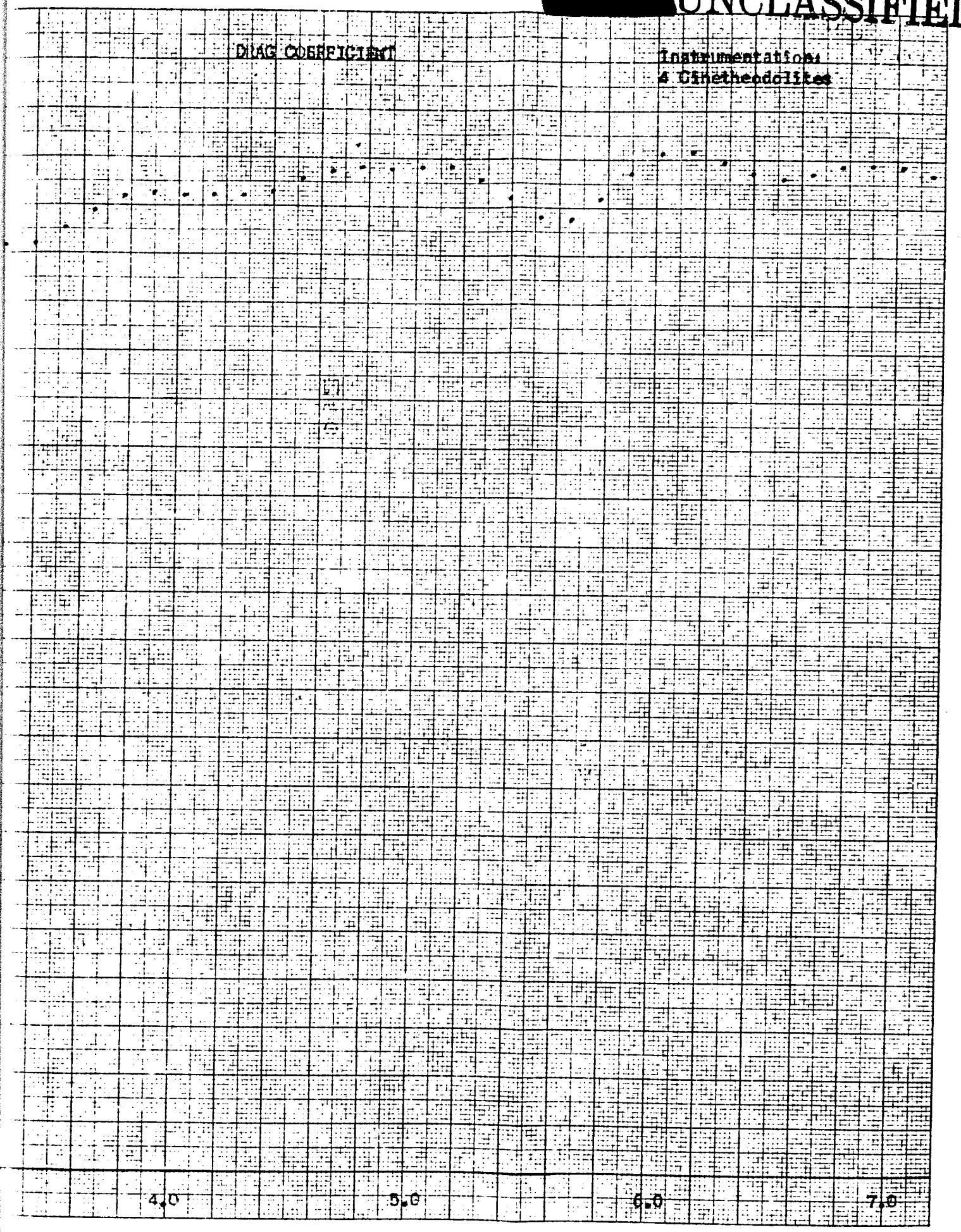

[redacted]

Figure 14

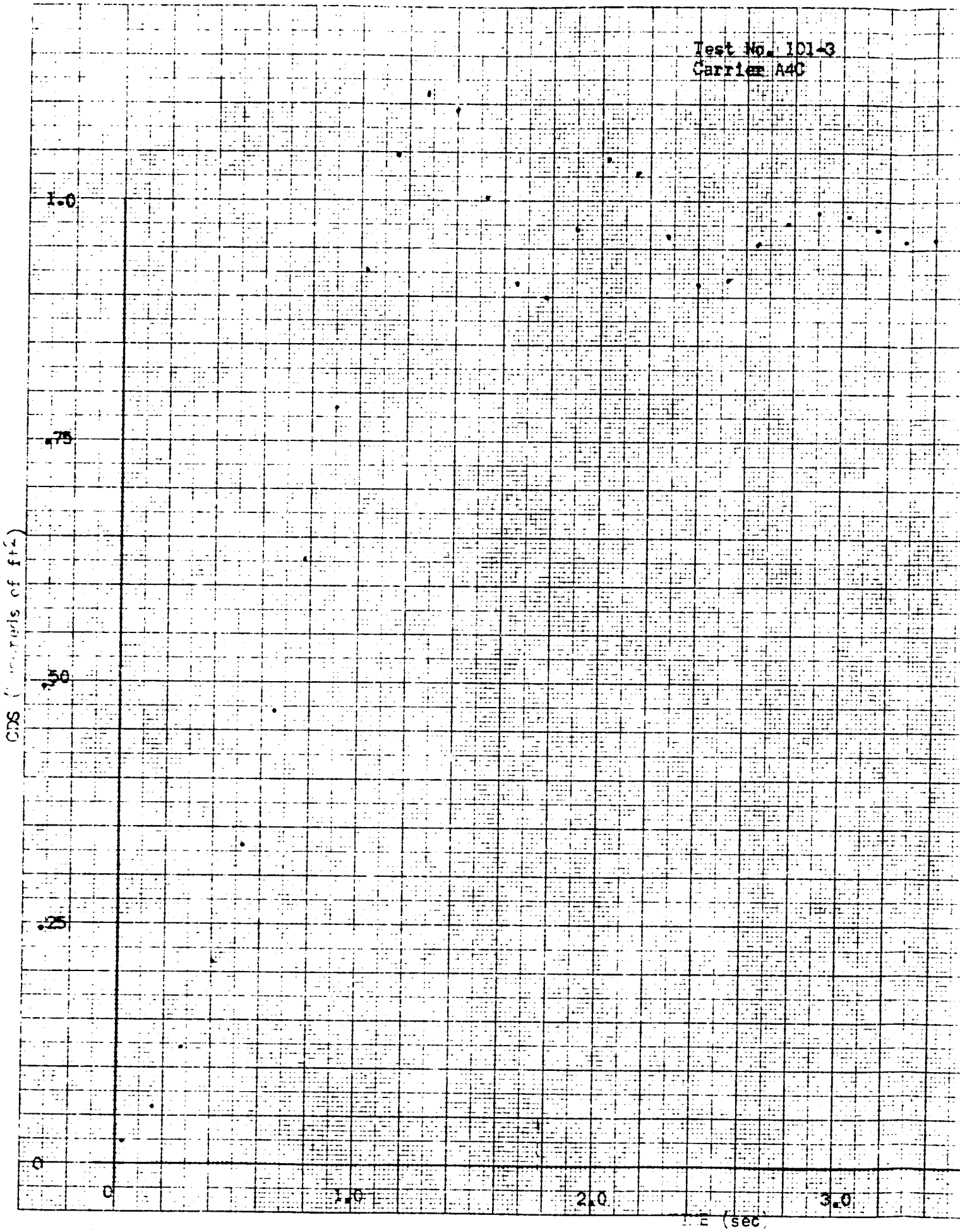

UNCLASSIFIED

Figure 15

KEUFFEL & ESSER CO. MADE IN U.S.A.

Figure 16

K+E 10 X 10 TO THE CM. 359-14
KEUFFEL & ESSER CO. MADE IN U.S.A.

UNCLASSIFIED

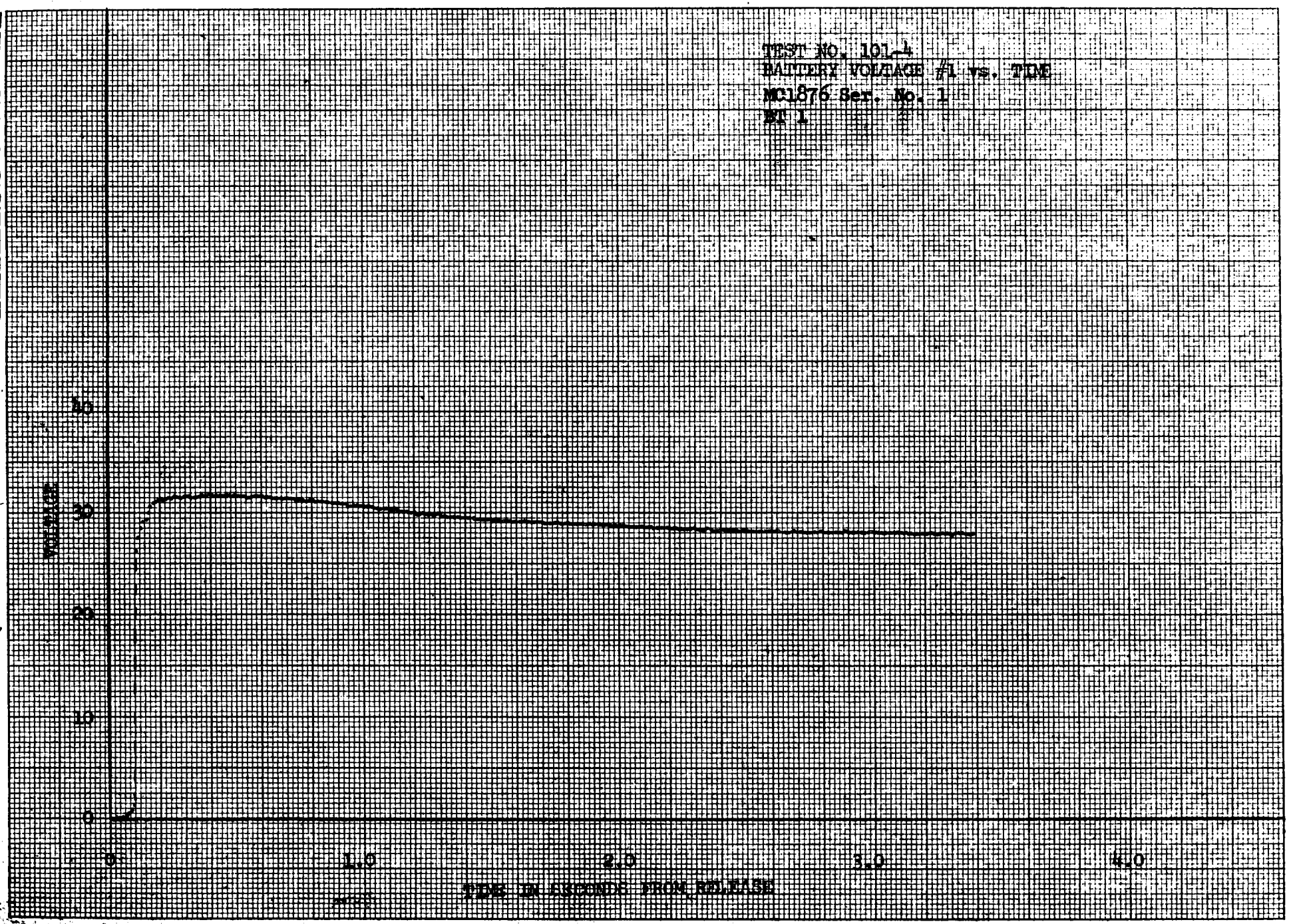

UNCLASSIFIED

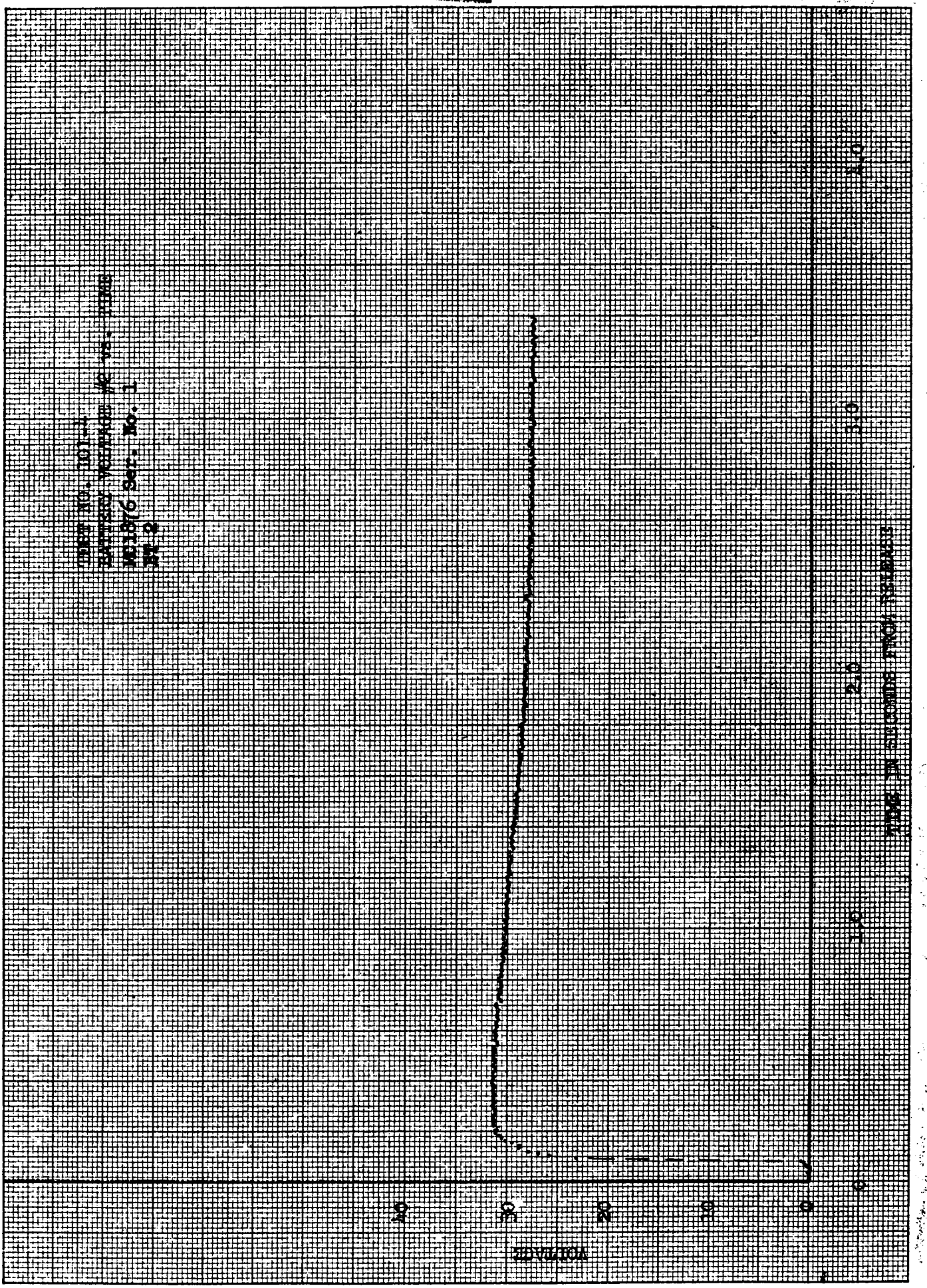

K+E 10 X 10 TO THE CM. 359-14
KEUFFEL & ESSER CO. MADE IN U.S.A.

Figure 18

K+E 10 X 10 TO THE CM. 359-14
KEUFFEL & ESSER CO. MADE IN U.S.A.

UNCLASSIFIED

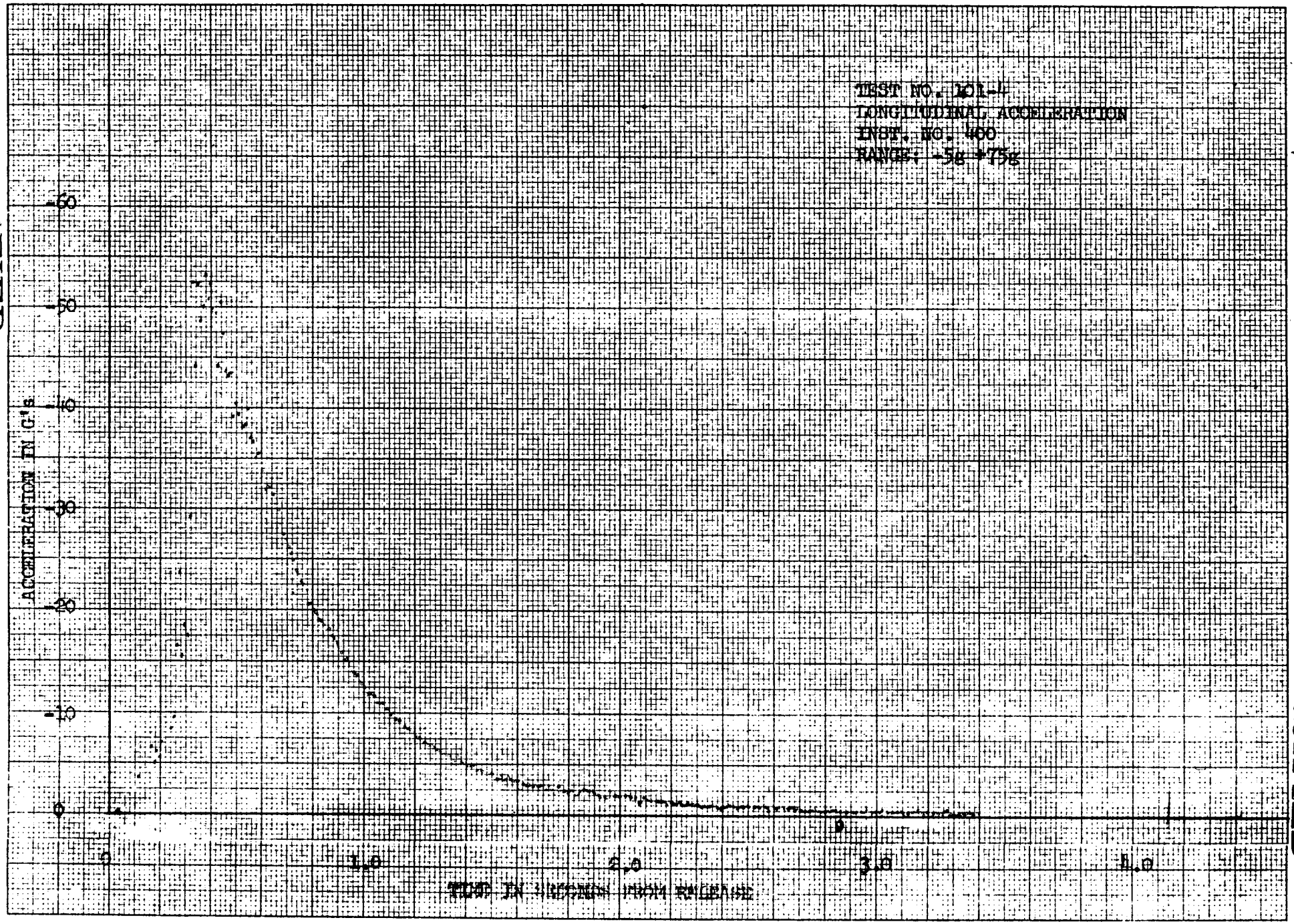

UNCLASSIFIED

Figure 19

K+E 10 X 10 TO THE CM. 359-14
KEUFFEL & ESSER CO. MADE IN U.S.A.

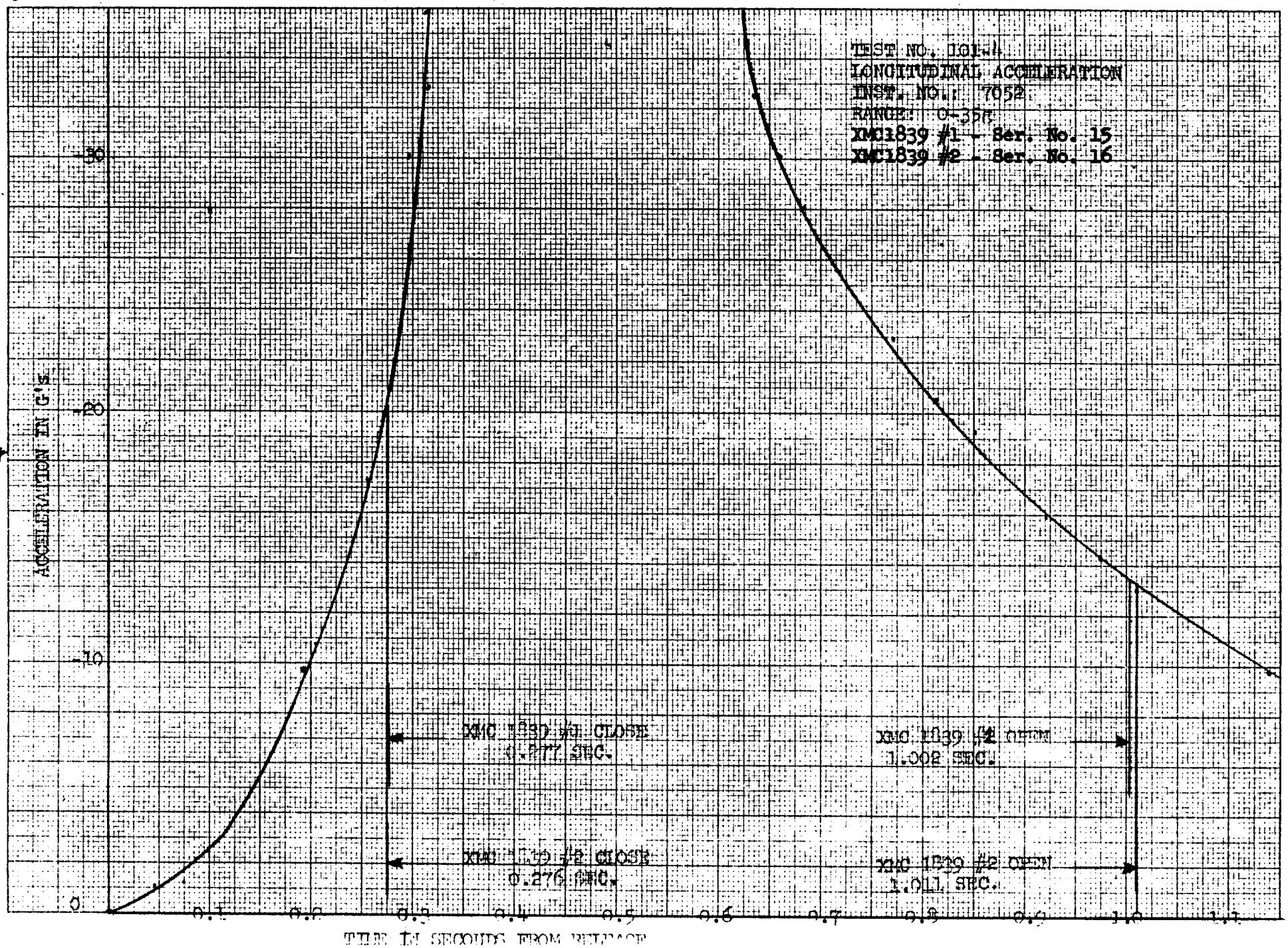

Figure 20

30

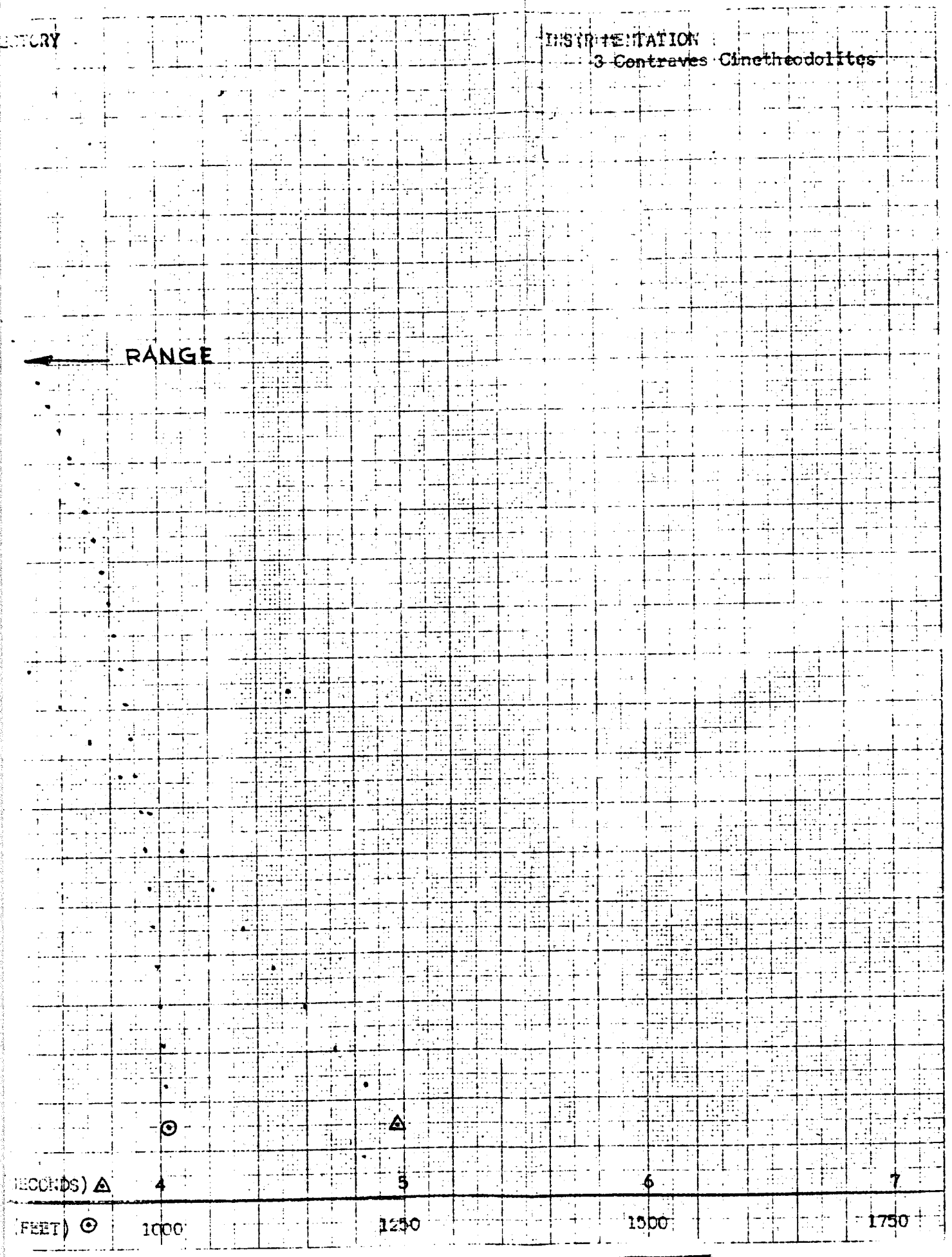
TORY
INSTRUMENTATION
3 Contraves Cinetheodolites
RANGE
(SECONDS)
4
5
6
7
(FEET)
1000
1250
1500
1750

Figure 21

TEST NO. 101-4
CARRIER F-104

TRAJECTO

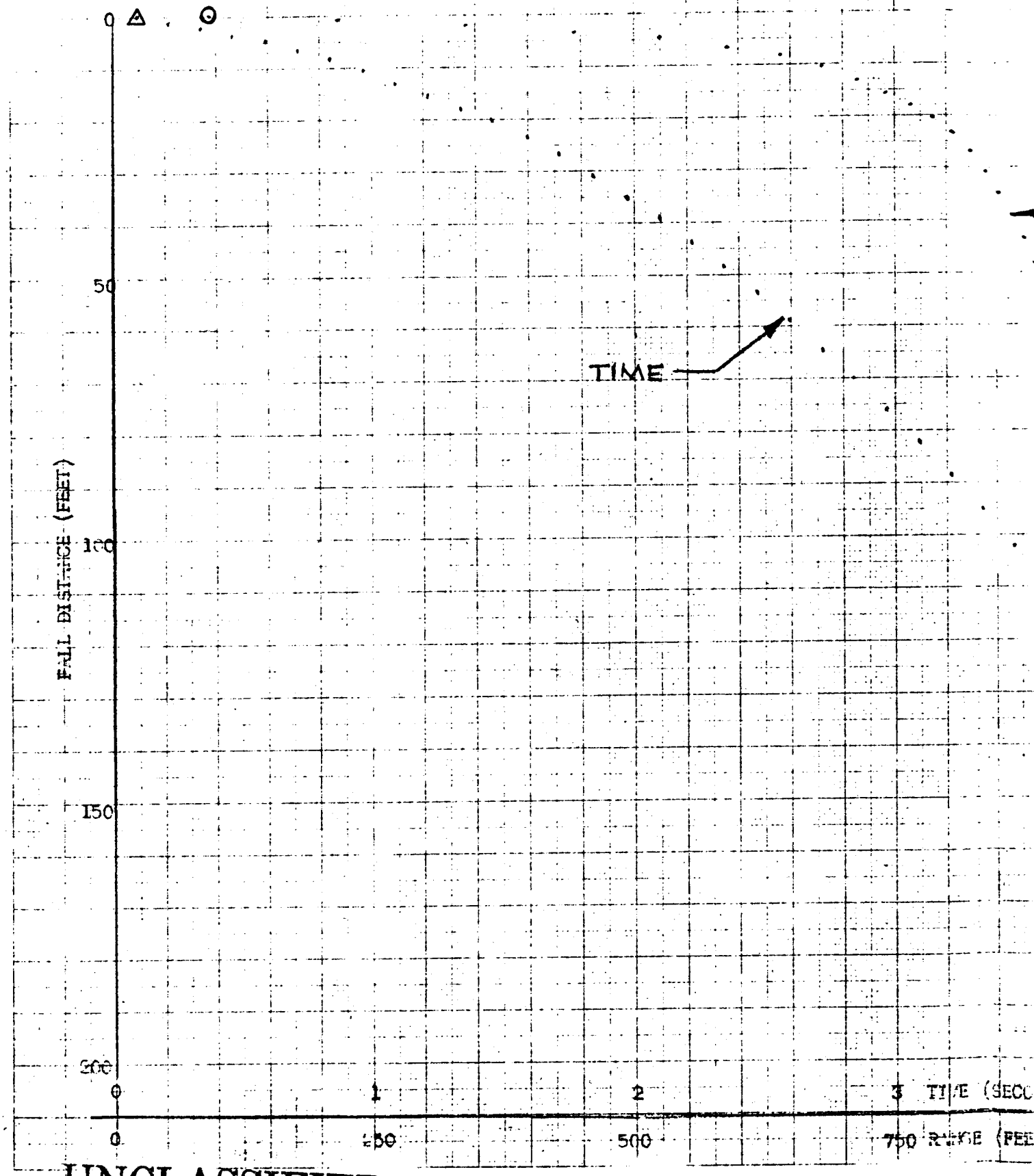

UNCLASSIFIED

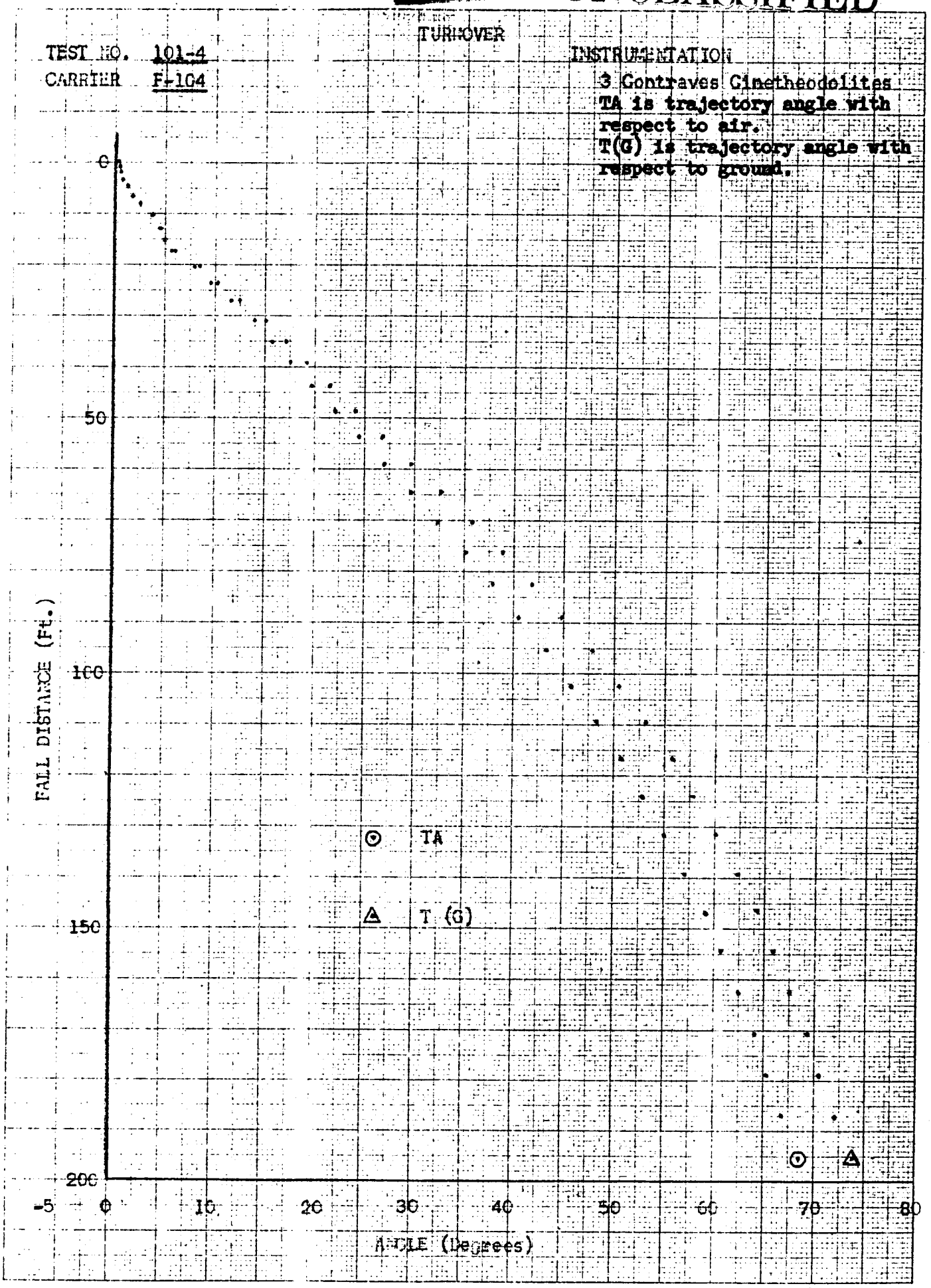
TURNOVER
TEST NO. 101-4
CARRIER F-104
INSTRUMENTATION
3 Contraves Cinetheodolites
TA is trajectory angle with respect to air.
T(G) is trajectory angle with respect to ground.
FALL DISTANCE (Ft.)
0
50
100
150
200
TA
T (G)
-5
0
10
20
30
40
50
60
70
80
ANGLE (Degrees)

Figure 22

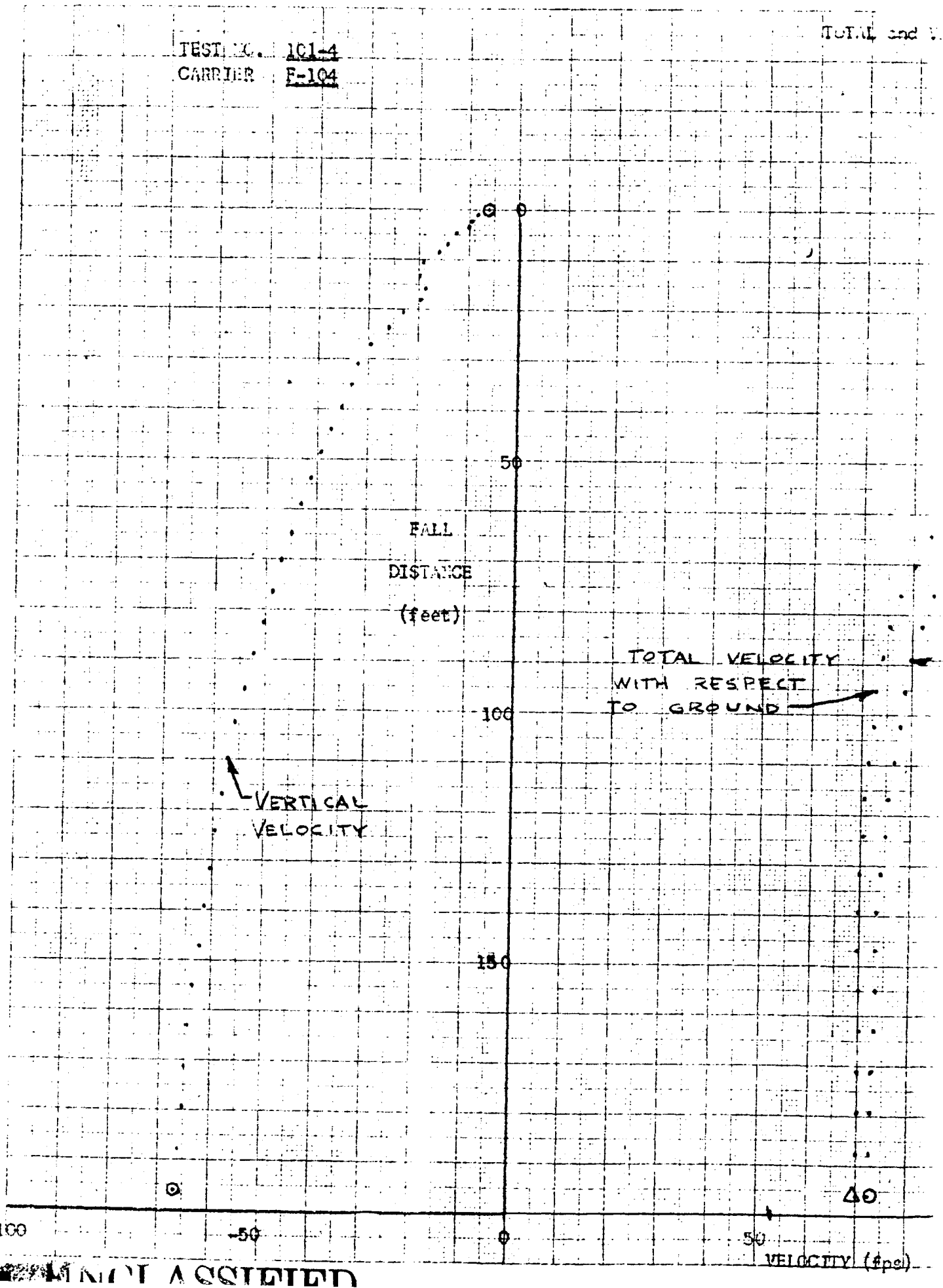

UNCLASSIFIED

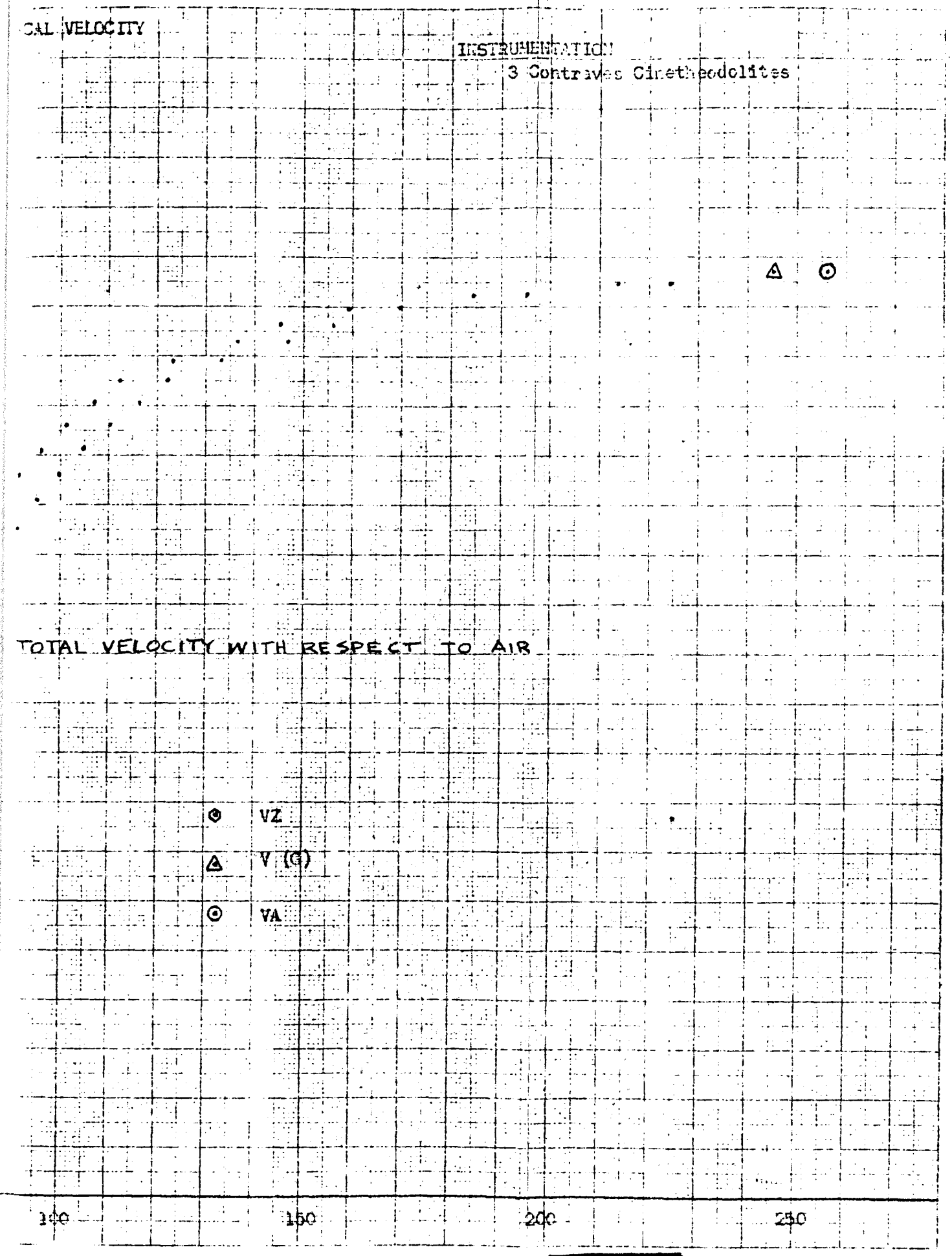

[redacted]

Figure 232

[redacted] UNCLASSIFIED

EFFICIENT

INSTRUMENTATION

3 Contraves Cinetheodolites

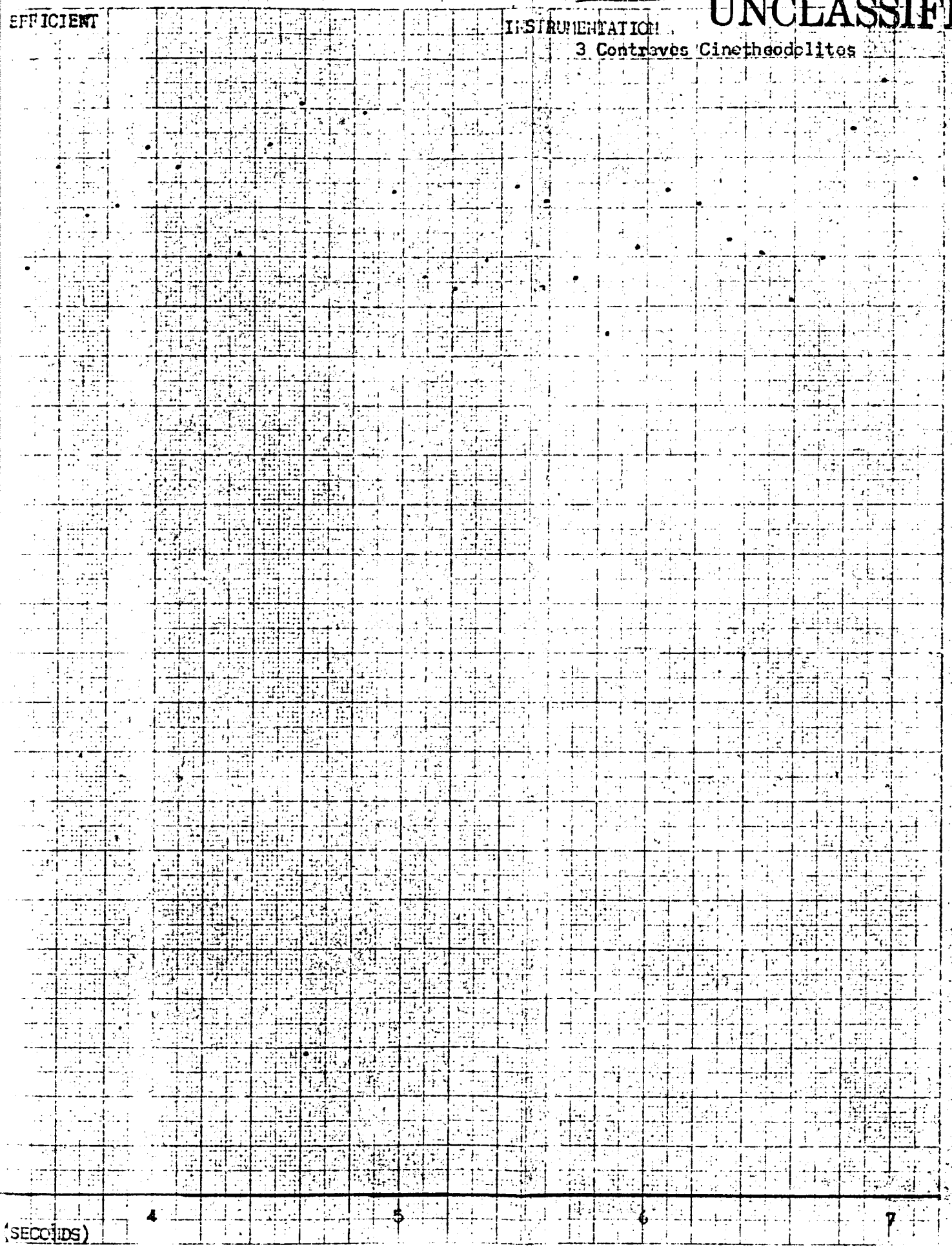

[redacted]

34

Figure 24

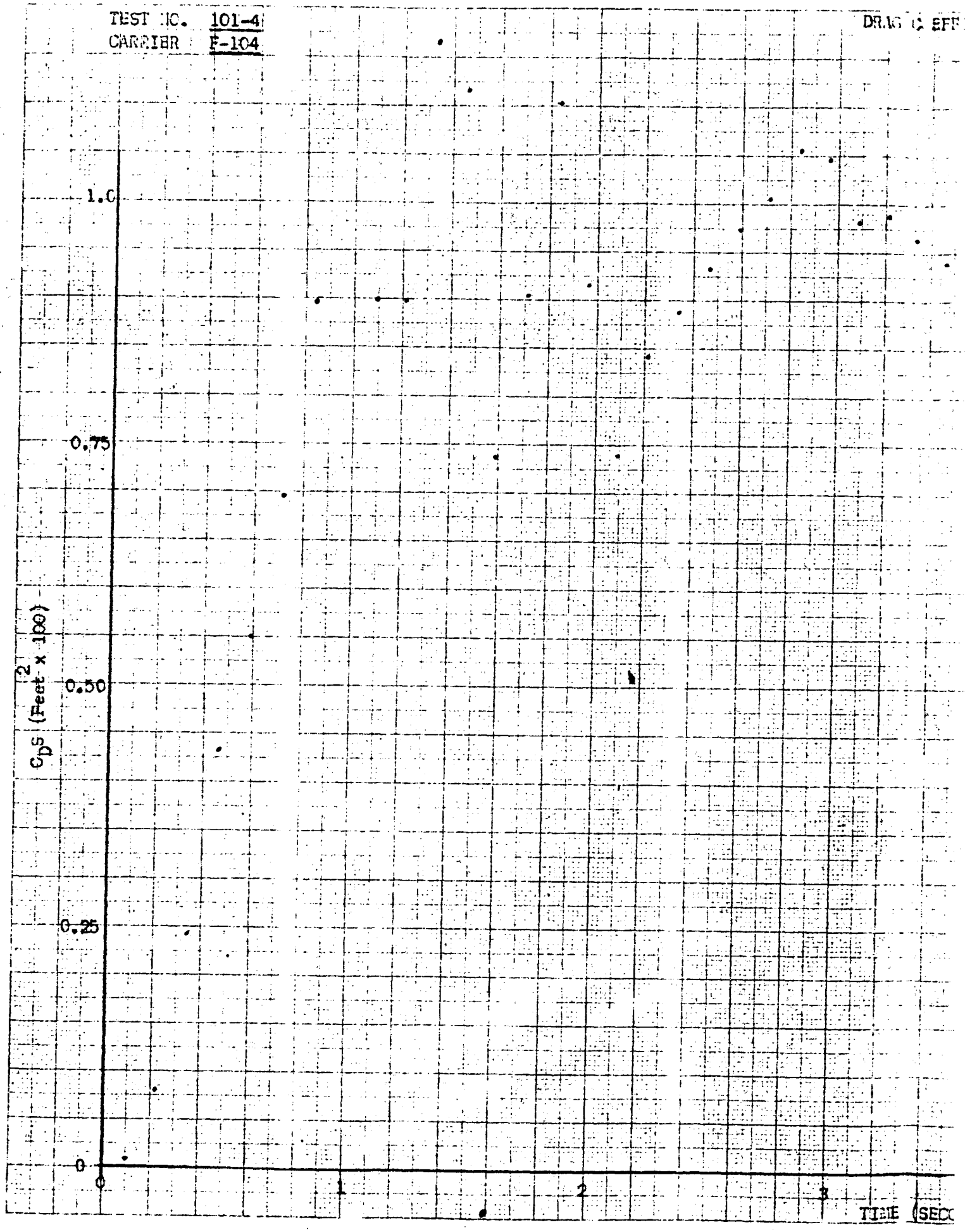

UNCLASSIFIED

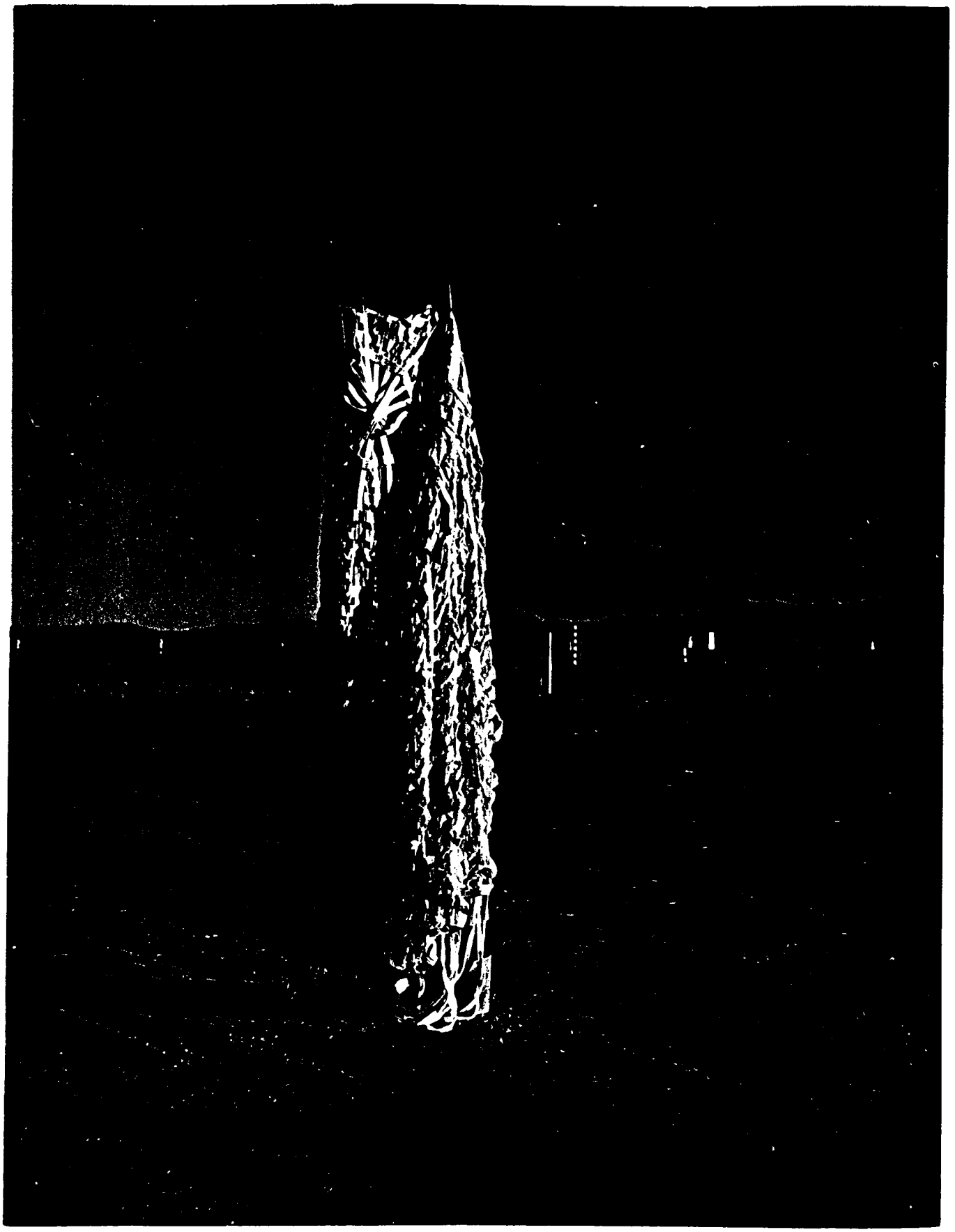

Figure 25