[redacted]

UNCLASSIFIED

SANDIA SYSTEMATIC DECLASSIFICATION REVIEW DOWNGRADING OR DECLASSIFICATION STAMP	
CLASSIFICATION CHANGED TO: U Emilda Selph 8/4/97 PERSON CHANGING MARKING & DATE Carmela Gallegos 8/12/97 PERSON VERIFYING MARKING & DATE	AUTHORITY: W. C. Layne RECORD ID: 97SN3185 DATED: 7/31/97

SANDIA SYSTEMATIC DECLASSIFICATION REVIEW
1st Review Date: 7/30/97
Authority: ADD
Name: [illegible]
2nd Review Date: 7/31/97
Authority: ADD
Name: W. Layne
Determination (Circle Number)
1. Classification Retained
2. Classification Changed to: UNCL
3. Contains No DOE Classified Information
4. Coordinate With:
5. Contains UCAI:
6. Comments:
UNCLASSIFIED

SC-DR-65-678
RESULTS OF TX-61 WEAPON
TESTS 212-3 AND 212-4
(Title Unclassified)

~~AEC ATOMIC WEAPON DATA SIGMA 3~~
RS 3410/517

F. W. Millikin and B. C. Caskey, 1512
Sandia Laboratory, Albuquerque

February 1966

RECORD COPY
Do Not Take From This Room

Approved by: D. M. Olson
D. M. Olson, 1510

ABSTRACT (U)

This report supplements SC-DR-64-1721, Test Plan for TX-61 Weapon Tests 212-1 Through 212-5, with the results of two ballistic, high-Q, sled tests of the TX-61 weapon development program.

[redacted]

UNCLASSIFIED

[redacted]

DISTRIBUTION:

1/22A - Hq., FC/DASA, Sandia Base
Attn: Adj. Gen., for Maj. R. E. Caudle, FC/DD-3
2/22A - Director, AFWL, Attn: WLIL, Kirtland AFB, N. M.
For: Capt. R. C. Lineback, SEMHP
3-4/22A - M. R. Madsen, 1512
5/22A - C. L. Carpenter, 1513
6/22A - S. A. Moore, 1540
7/22A - R. W. DeVore, 2110
8/22A - J. M. Wiesen, 2150
9/22A - A. F. Cone, 2510
10/22A - R. N. Browne, 7214
11/22A - W. V. Hereford, 7215
12/22A - H. S. North, 7216
13/22A - R. C. Maydew, 9320
Attn: W. R. Barton, 9324
14/22A - B. R. Allen, 3421
15/22A - M. G. Randle, 3428-1
16/22A - B. F. Hefley, 8232
17/22A - W. F. Carstens, 3410
Attn: J. Shunny, 3412
18-22/22A - R. C. Smelich, 3415-3

[redacted]

This [redacted]

TABLE OF CONTENTS

	Page
Introduction	5
Test Objectives	5
Summary	5
Description of Test Vehicle	6
Instrumentation	7
Test Results	7

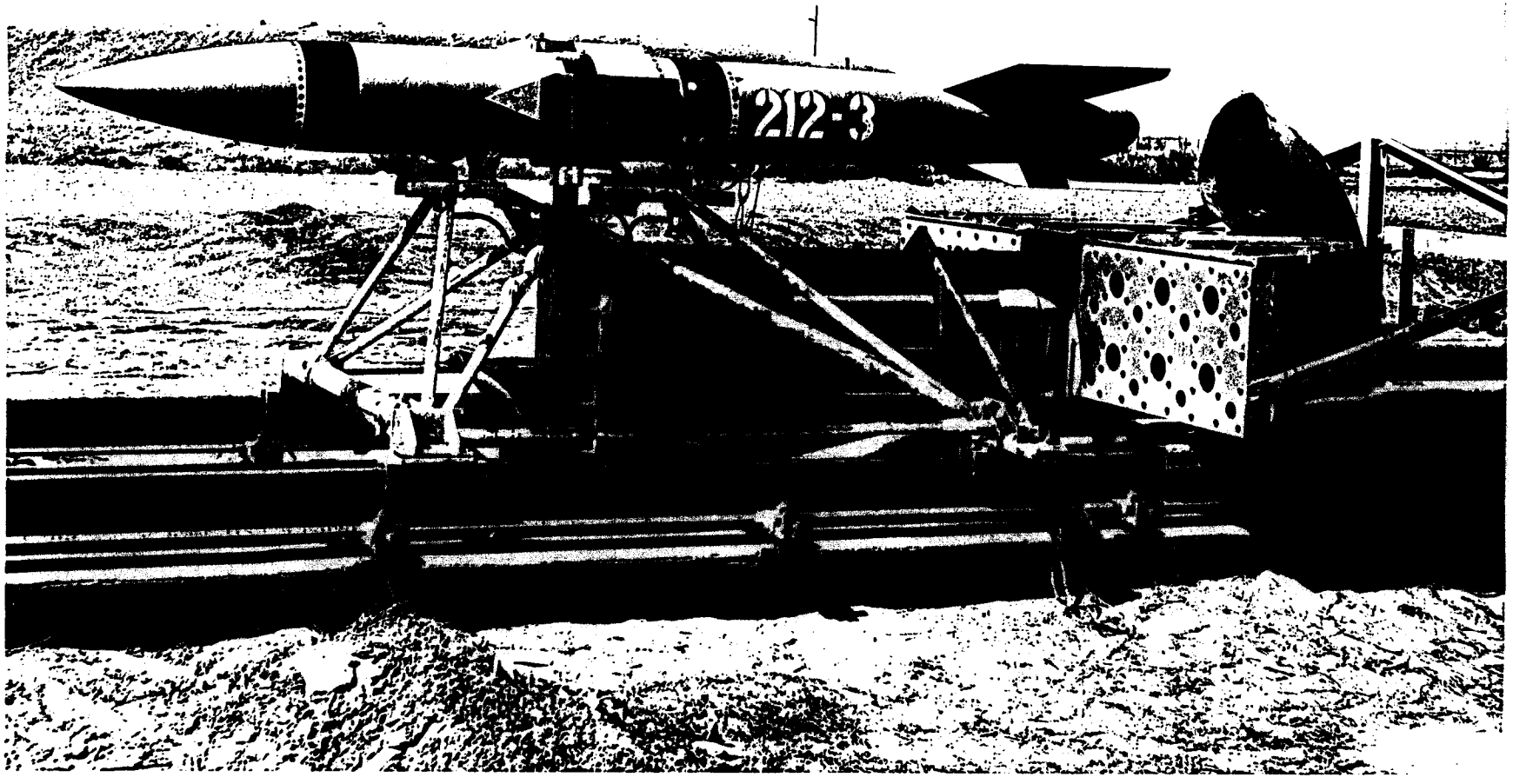

Frontispiece

RESULTS OF TX-61 WEAPON TESTS 212-3 AND 212-4

Introduction

Weapon Tests 212-3 and 212-4 were ballistic, high-speed sled tests performed to obtain parachute information for the TX-61 weapon system. Table I summarizes the test conditions for Units 212-3 and 212-4.

TABLE I

Summary of Test Conditions

	212-3	212-4
Date	March 24, 1965	April 27, 1965
Carrier	Ejector sled	Ejector sled
Velocity at separation	1630 fps	1587 fps
Unit temperature condition	Ambient	Ambient

Test Objectives

The purposes of these tests were to evaluate the 16-foot-diameter parachute and parachute deployment system in a high-Q environment under ambient temperature conditions.

Summary

Unit 212-3

Unit 212-3 did not eject as planned because the track-installed electrical screen box failed to give a launch signal. No objectives of the test were met.

Unit 212-4

The sled ejector was not triggered due to a broken wire in the sled electrical trigger circuit. No objectives of the test were met.

Description of Test Vehicle

Mechanical

Figure 1 defines Unit 212-3 and Figure 2 defines Unit 212-4. Each test vehicle used an empty one-piece steel nose, an aluminum center case, a preflight case section, a radial-screw joint tail, and the necessary interconnecting hardware. Weights were added to achieve the correct weight and CG.

A special heavy-duty lug (Drawing No. 81846) was used on the case; the preflight lug was modified per Drawing 81860; the preflight case (Drawing No. 199030) was modified per Drawing No. 81865; and the lug was mounted with a preflight lug plate (Drawing No. 81859) on the ID of the case. A shear plate (Drawing No. 81849) was mounted on the center case section at Station 46.39 to take the longitudinal loads during sled acceleration. Accelerometers were installed in the center case section to measure the loads during the sled run.

Table II summarizes the physical characteristics of the two units.

TABLE II

	212-3	212-4
Length (in.)	141.0	141.0
Weight (lb)	609.0	603.0
Diameter (in.)	12.75	12.75
CG (Station)	59.9	61.0
Yaw MI (lb-in.^{2})	640,000	Not recorded
Parachute dia (ft)	16	16

Electrical

The electrical systems for these two units were described in SC-DR-64-1721, Figure 2 (CKN78027). The pulse initiator timer setting (time of parachute deployment) for both units was 1.0 second after ejection.

Instrumentation

The instrumentation was the same for both units: data were collected by camera coverage and RF FM/FM telemetry. Two Photosonic, Model 1-F, 1600-mm cameras (1000 frames per second) were mounted on each unit at Station 64.0. Post-impact pictures were taken with hand-held cameras.

Test Results

A summary of test data for these two tests is given in Table III.

TABLE III

	212-3	212-4
Launch station	2985	2980
Ejection station	975	975
Number of stations	Two	Two
Maximum sled acceleration	33.4 g	35 g
Sled velocity at ejection	1630 fps	1587 fps
Parachute timer setting	1.0 sec after ejection	1.0 sec after ejection
Parachute deployment time	-	-
Wind velocity	35.2 fps	11.7 fps
Wind direction	190°	SSW
Air pressure	622 mm	631 mm
Air temperature	42°F	42°F
Impact station	Dirt barricade at Sta.-160	-160
Total flight time	0.4 sec	0.39 sec
Temperature of unit	Ambient	Ambient

Test 212-3

The object of Test 212-3 was to evaluate the operation of the TX-61 parachute and parachute deployment system at a high dynamic pressure (2750 lb/ft^2). The test demonstrated that the unit-to-sled attachments will accept the loads associated with high-speed tests.

The test unit was loaded on the ejector sled, and two stages of 24 HVAR's and 10 ZUNI rocket motors were used to obtain a maximum velocity of 1630 fps. Because of a failure of the screen box, the sled ejector was not triggered, and the test unit tore loose from the sled during the water brake phase.

The initial impact of the unit on the upper edge of the dirt bank at the south end of the track caused the afterbody to break and partially deployed the parachute before the second impact.

The documentary cameras provided good photographic coverage. The on-board cameras were operating at launch, but separated from the unit at initial impact. No usable film was recovered.

The unit and the telemetry were heavily damaged, but the telemetry system operated normally up until the first impact and good coverage of launch and track data was obtained.

Figures 3 and 4 show the damage sustained by the unit after impact. Figures 5 and 6 show the sled latches with parts of the lugs still locked in place.

The following time sequence was observed from the telemetry record:

First-stage fire	0 second
Second-stage fire	1.14 seconds
Begin sled deceleration	2.2 seconds
Cable pullout	2.7 seconds
Loss of signal	3.1 seconds

The longitudinal accelerometers indicated 30 g during first-stage fire, 40 g during second-stage fire, and 100 g during sled retardation.

Test 212-4

The object of Test 212-4 was to evaluate the operation of the TX-61 parachute and parachute deployment system at a high dynamic pressure (2750 lb/ft^2). The unit was loaded on the ejector sled, and two stages of 24 HVAR's and 10 ZUNI rocket motors were used to obtain a maximum velocity of 1587 fps. All first- and second-stage sled rocket motors fired normally. The sled ejector was not triggered because of a broken wire in the electric trigger circuit, and the unit tore loose from the sled during the water brake phase and impacted in the dirt bank at the south end of the track. The unit, the telemetry system, and the on-board cameras were totally destroyed. The telemetry system operated normally until impact, and good coverage of launch and track data were obtained.

The documentary cameras provided good photographic coverage. A review of the film showed that some water was picked up by the sled during acceleration, and this spray might have caused the broken wire in the electric trigger circuit. Figure 7 shows the remains of the parachute after impact.

The following time sequence was observed from the telemetry record:

First-stage fire	0 second
Second-stage fire	1.16 seconds
Begin sled deceleration	2.2 seconds
Cable pullout	2.47 seconds
Loss of signal	3.08 seconds

The longitudinal accelerometers indicated 35 g during first-stage fire and 25 g during second-stage fire. The externally mounted accelerometers and cabling appear to have torn off during deceleration by the water spray.

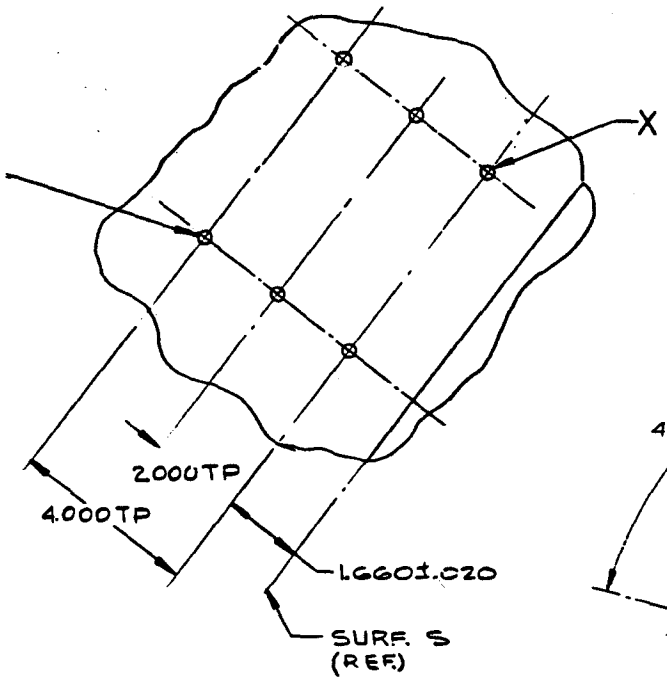
X
2.000TP
4.000TP
1.6601±.020
SURF. S
(REF.)

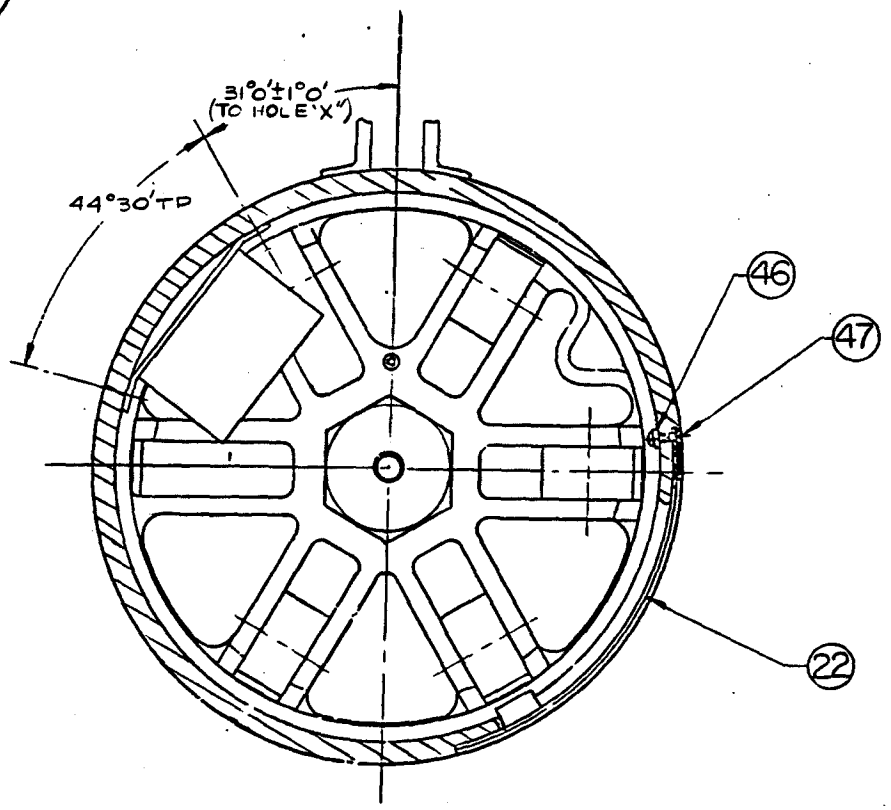
31°0'±1°0'
(TO HOLE "X")
44°30'TP
46
47
22

SECTION A-A

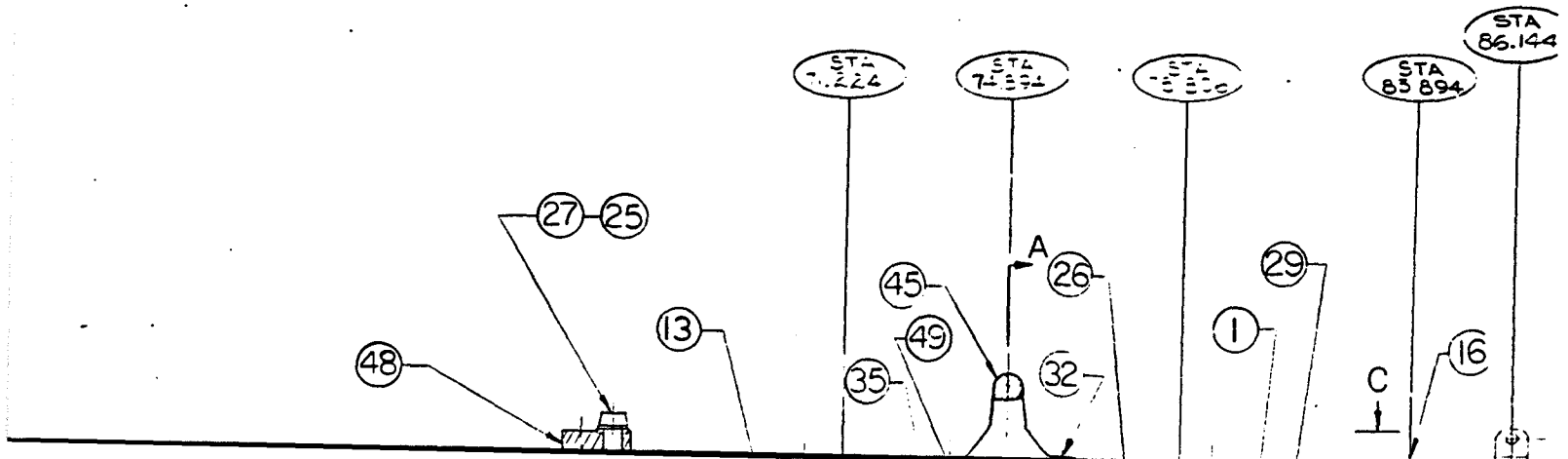
STA
86.144
STA
83.894
27
25
A
26
29
45
13
49
1
16
48
35
32
C

7 [redacted] 6

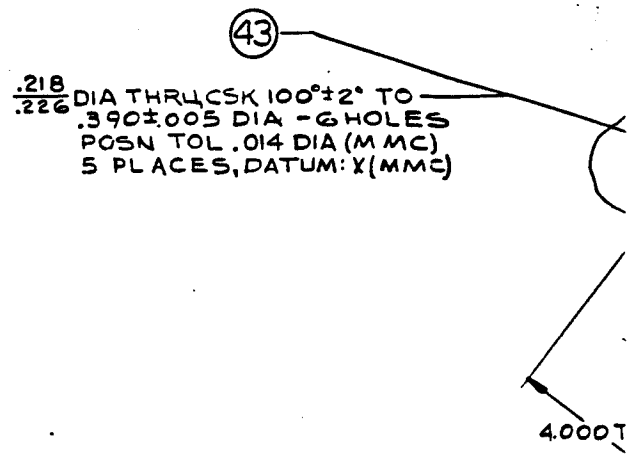
43
.218
.226 DIA THRU CSK 100°±2° TO
.390±.005 DIA -6 HOLES
POSN TOL .014 DIA (M MC)
5 PLACES, DATUM: X (MMC)
4.000

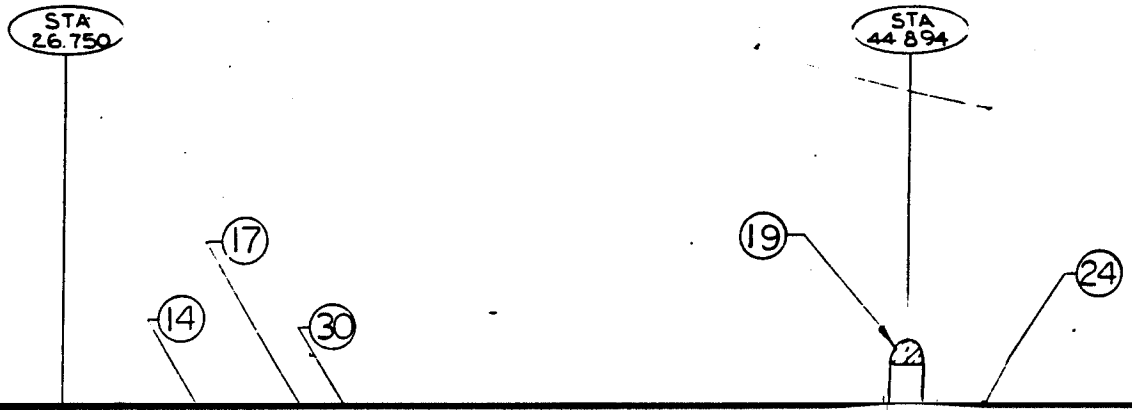
STA
26.750
STA
44.894
17
14
30
19
24

UNCLASSIFIED

8

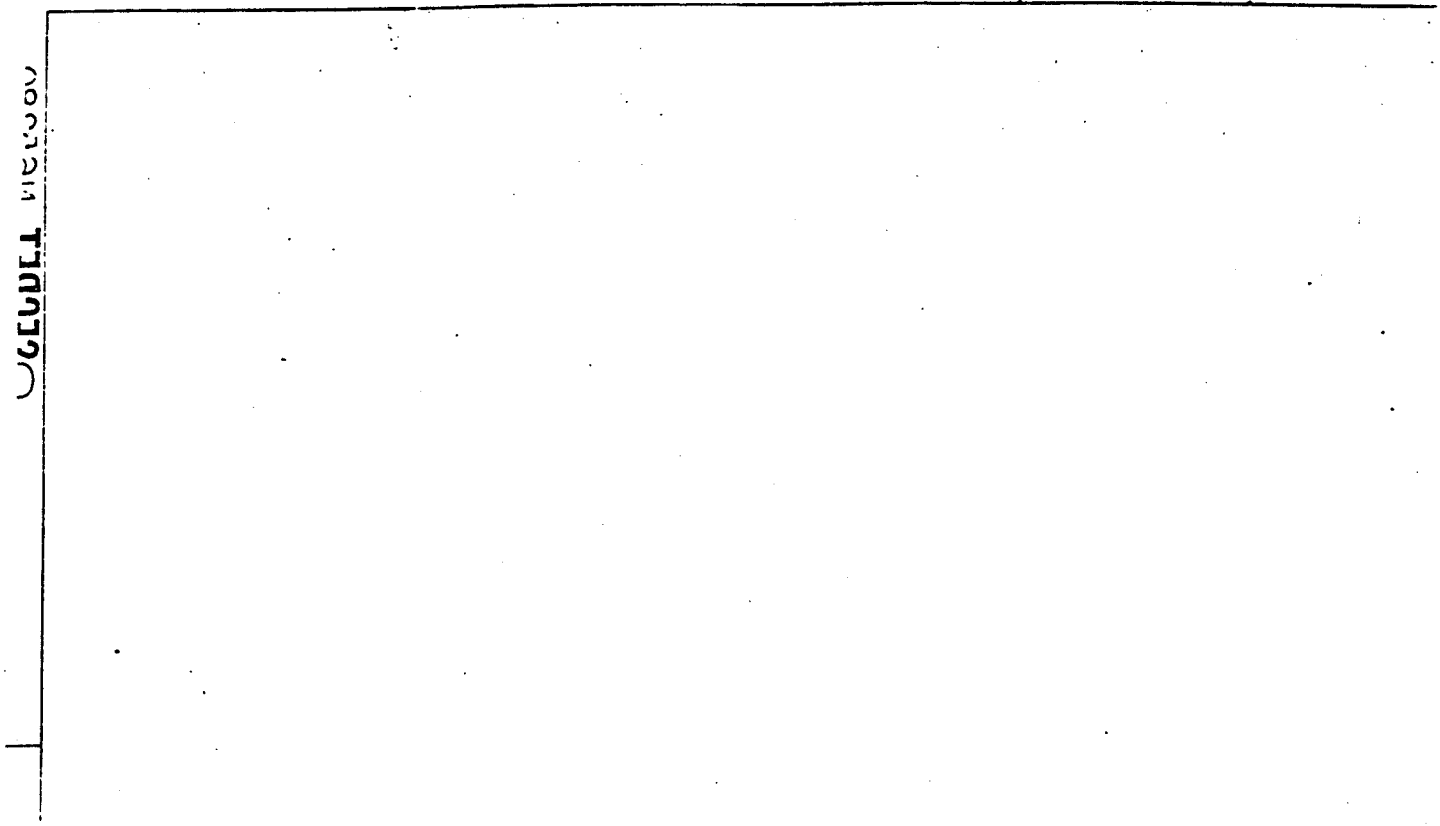

C

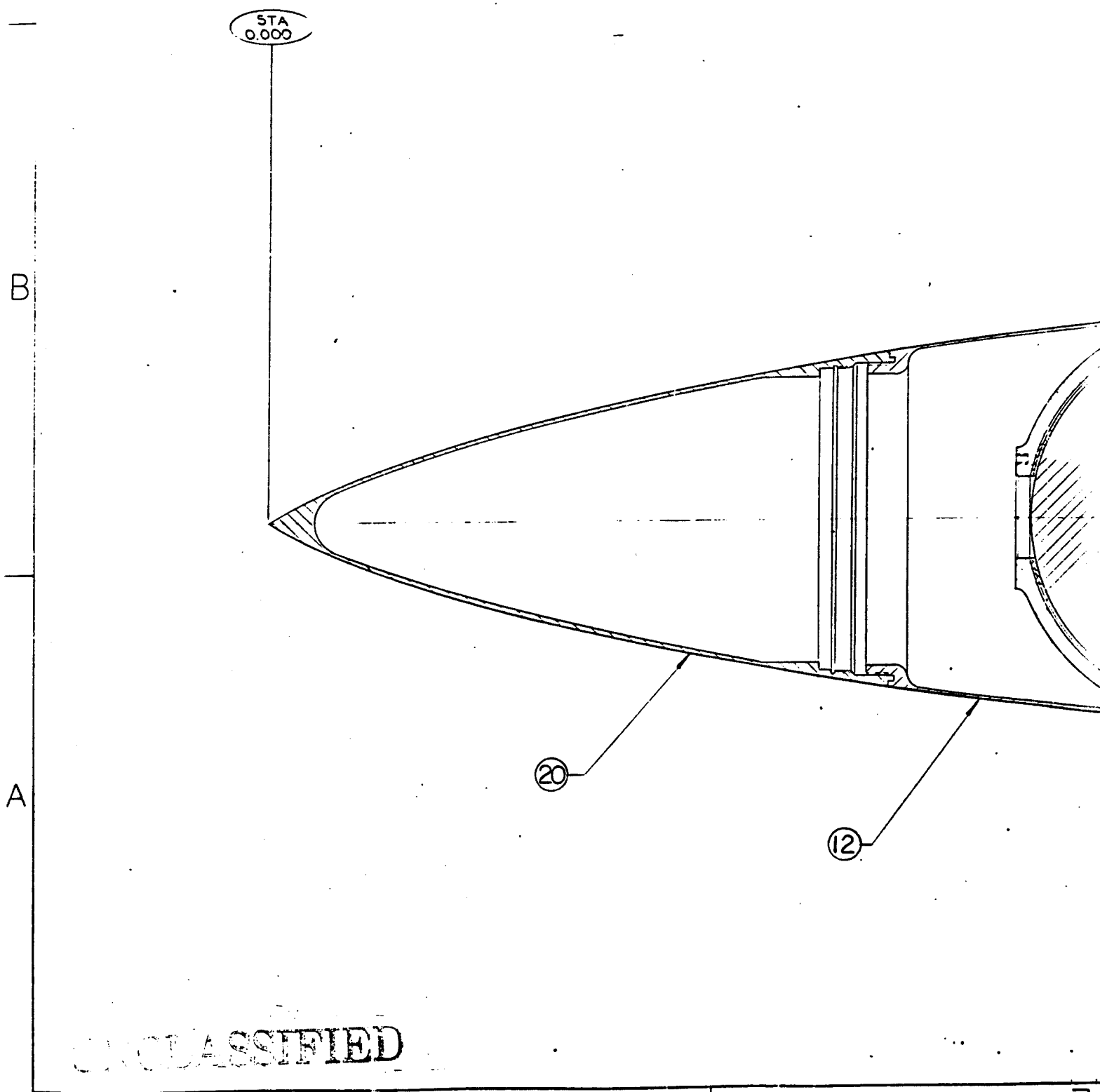

UNCLASSIFIED

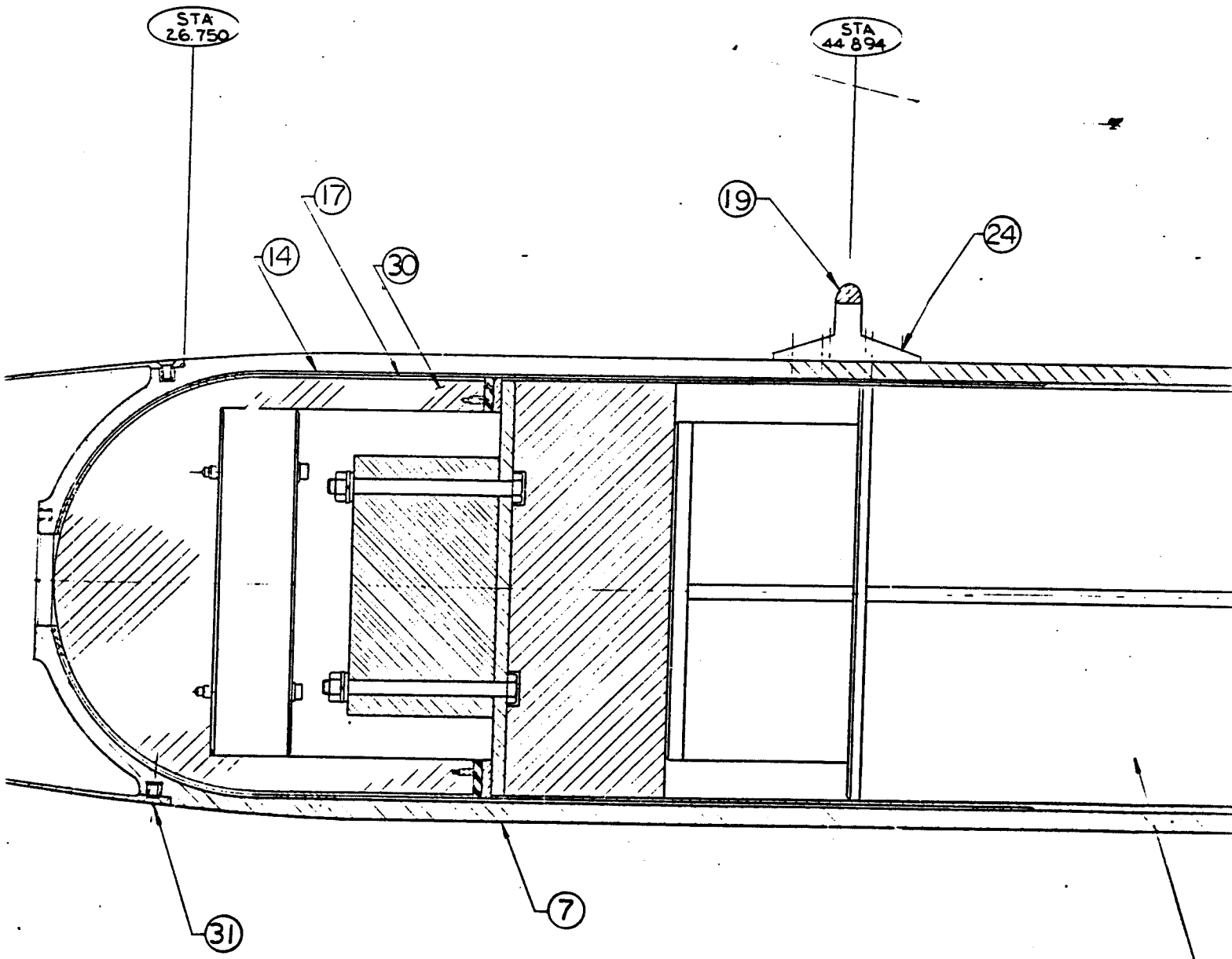

UNCLASSIFIED

[redacted]

7 N65280 6

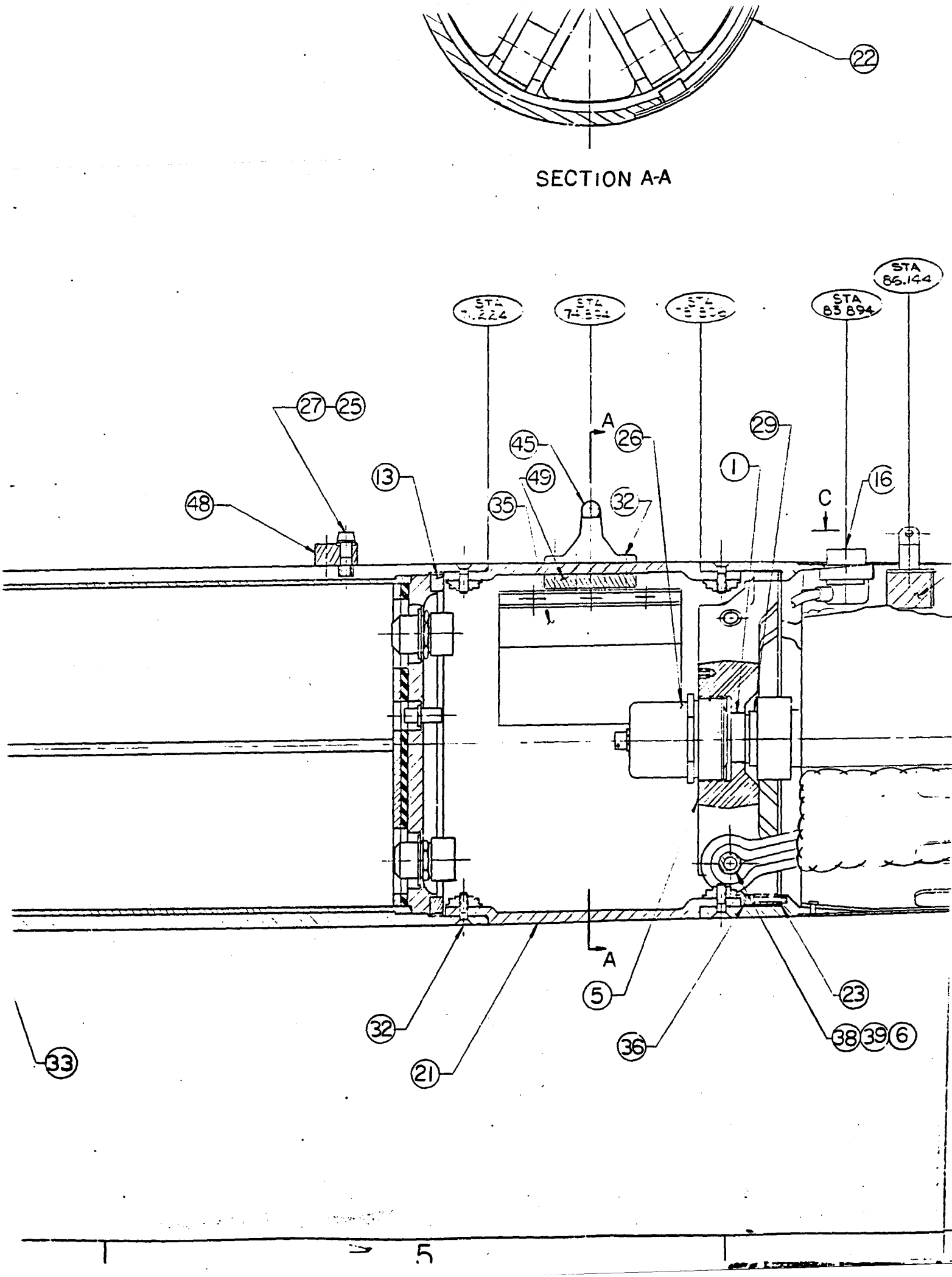
22
SECTION A-A
STA 86.144
STA 83.894
27
25
A
26
29
45
49
1
13
16
C
48
35
32
A
5
23
32
36
38
39
6
33
21
5

W.O. 61089

NOTES

1. FOR ADDITIONAL INFORMATION PERTAINING TO FIELD TEST EQUIPMENT, SEE DRAWING NUMBER N59546.

REVISIONS

ISS	SHEET AND ZONE	DESCRIPTION	PREPARED BY	DATE	CHK'D	ENGR
1		BASSINGER, R. DORNEMAN, E. 4412-5		7-6-64		
2		ADDED: 212-2 DESIGNATION AND ITEM 45 DELETED: ITEM 27 AND NOTE 2 CHANGED: ITEM 5 WAS 180372-00; ITEM 19 WAS 194059-00; ITEM 25 WAS 186792-00; ITEM 34 WAS N60473; ITEM 35 WAS N60418; ITEM 38 WAS 12 REQ.; ITEM 39 WAS 16 REQ; ITEM 40 WAS MS 35192-42; ITEM 43 WAS MS35193-72. MAYER CO 2212-5		2-15-65		
3		ADDED: ITEMS 25, 27, 48 & 49; 212-3 DESIG. CHANGED: 7, 19, 21 & 45 SOLOMKO, A 2212-5		[illegible]		

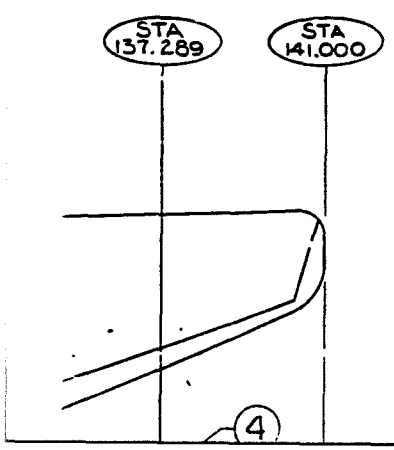

1	N81859	PREFLIGT LUG PLATE (212 SERIES)				49
1	N81849	SHEAR PLATE (212 SERIES)				48
5	AN509-10R12	SCREW, MACH 100° CSK HD				47
5	AN363-1032	NUT, SELF LOCK				46
1	N81860	AFT LUG, MOD. (212 SERIES)				45
2	MS35225-44	SCREW, MACH, PAN HD				44
6	AN509-10R13	SCREW, MACH, 100° CSK HD				43
32	NAS1216-4-8	SCREW, PAN HD, "HI-TORQUE"				42
4	MS35456-23	SCREW, CAP, SOC HD				41
4	MS35193-58	SCREW, MACHINE 82° CSK HD				40
10	MS24665-285	PIN, COTTER				39
6	MS20392-7C67	PIN, FLAT HD				38
4	MS20392-7C57	PIN, FLAT HD				37
18	MS16997-37	SCREW, CAP, SOC HD				36
1	N65396	JUNCTION BOX NO 2 (103)(1551)				35

CLASSIFIED

SLED, CHUTE EVALUATION TEST VARIATIONS

DWG ISS.		TEST NO.
1		212-1
2		212-2
3		212-3

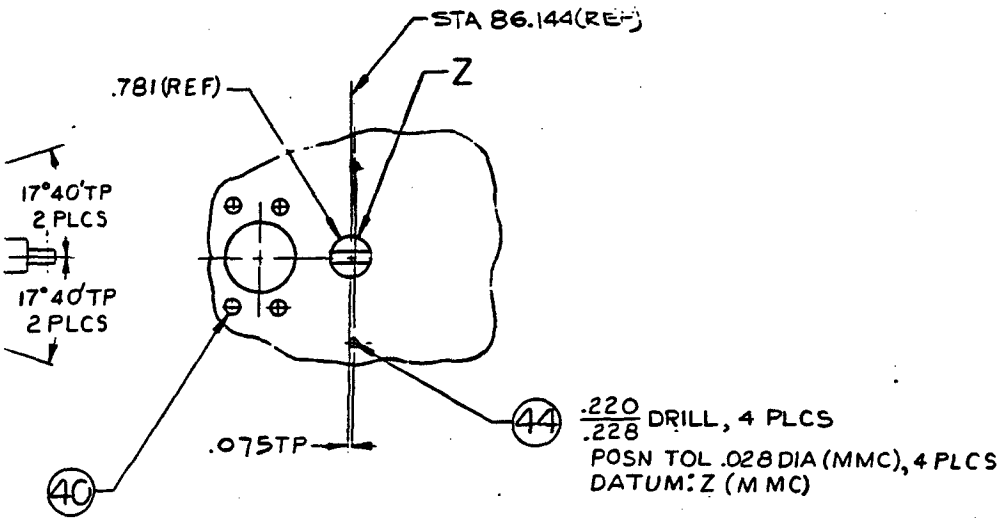

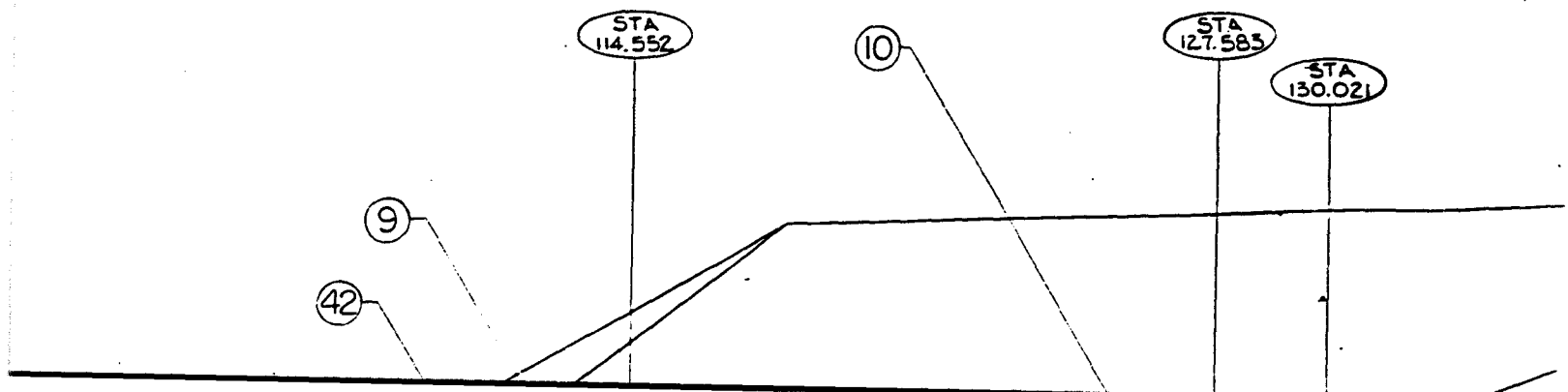

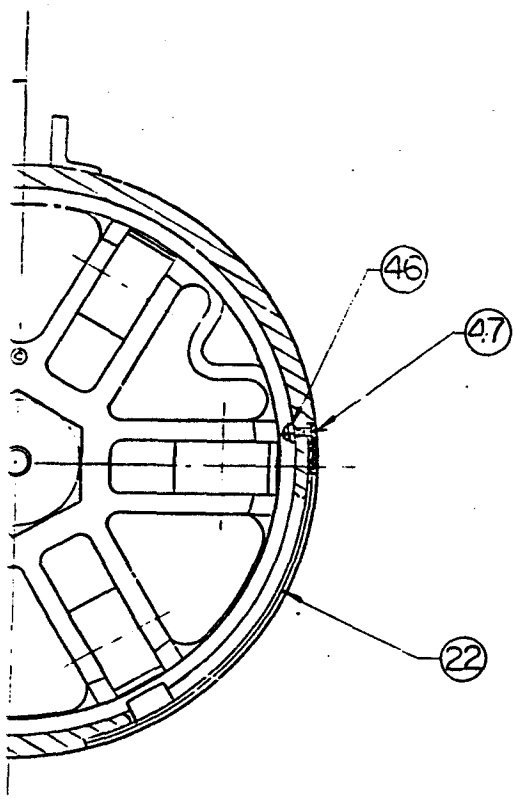
46
47
22

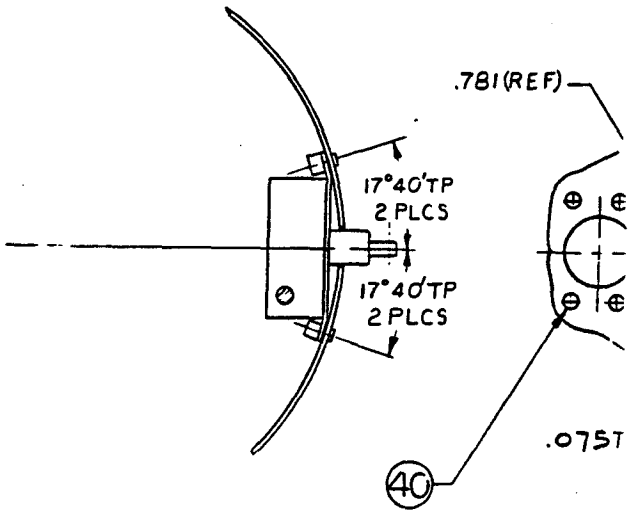
.781 (REF)
17°40'TP
2 PLCS
17°40'TP
2 PLCS
.075T
40

TION A-A

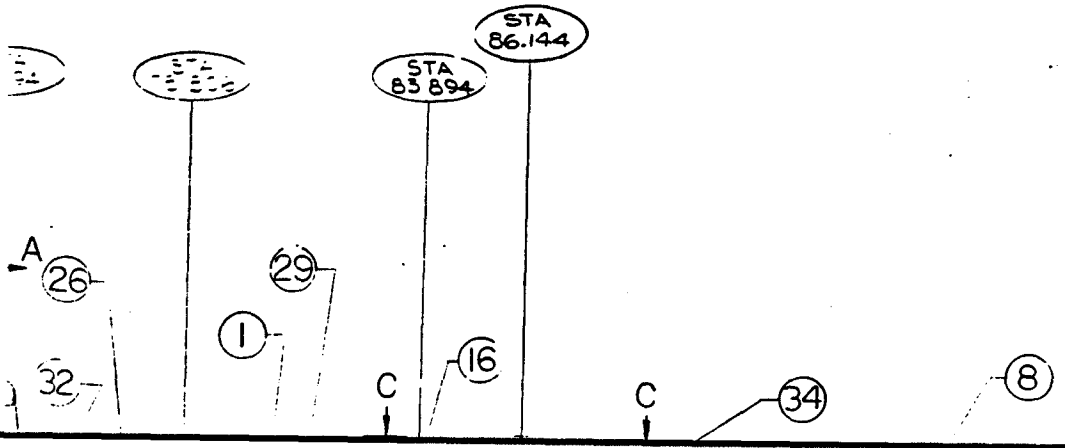
STA
86.144
STA
83 894
A
26
29
1
32
C
16
C
34
8

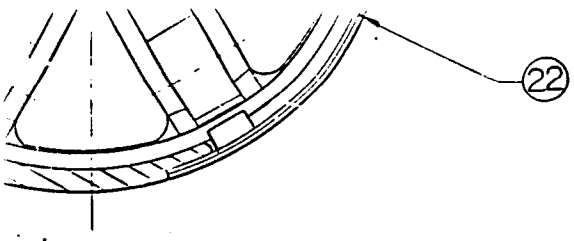

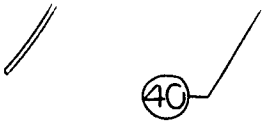

SECTION A-A

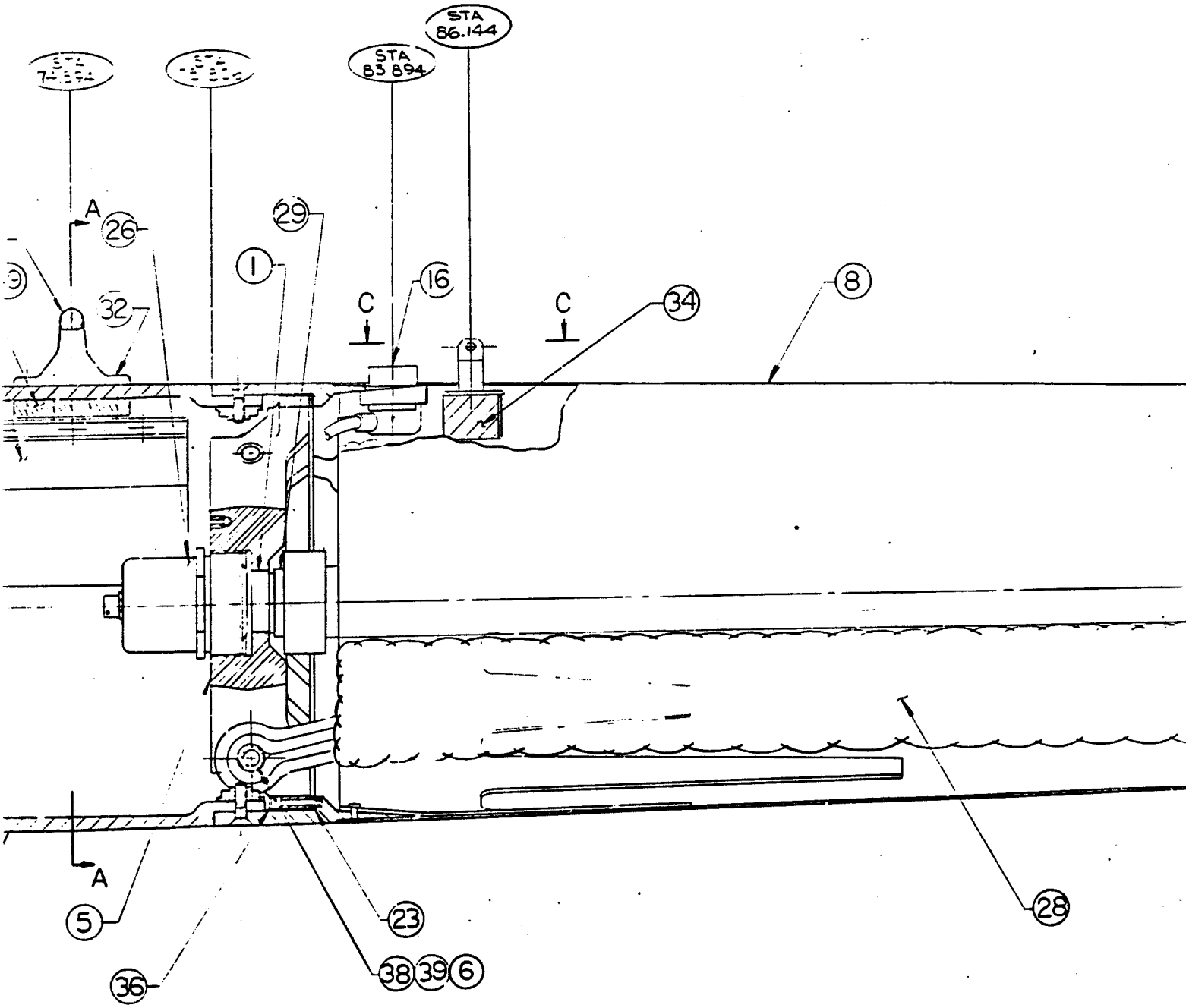

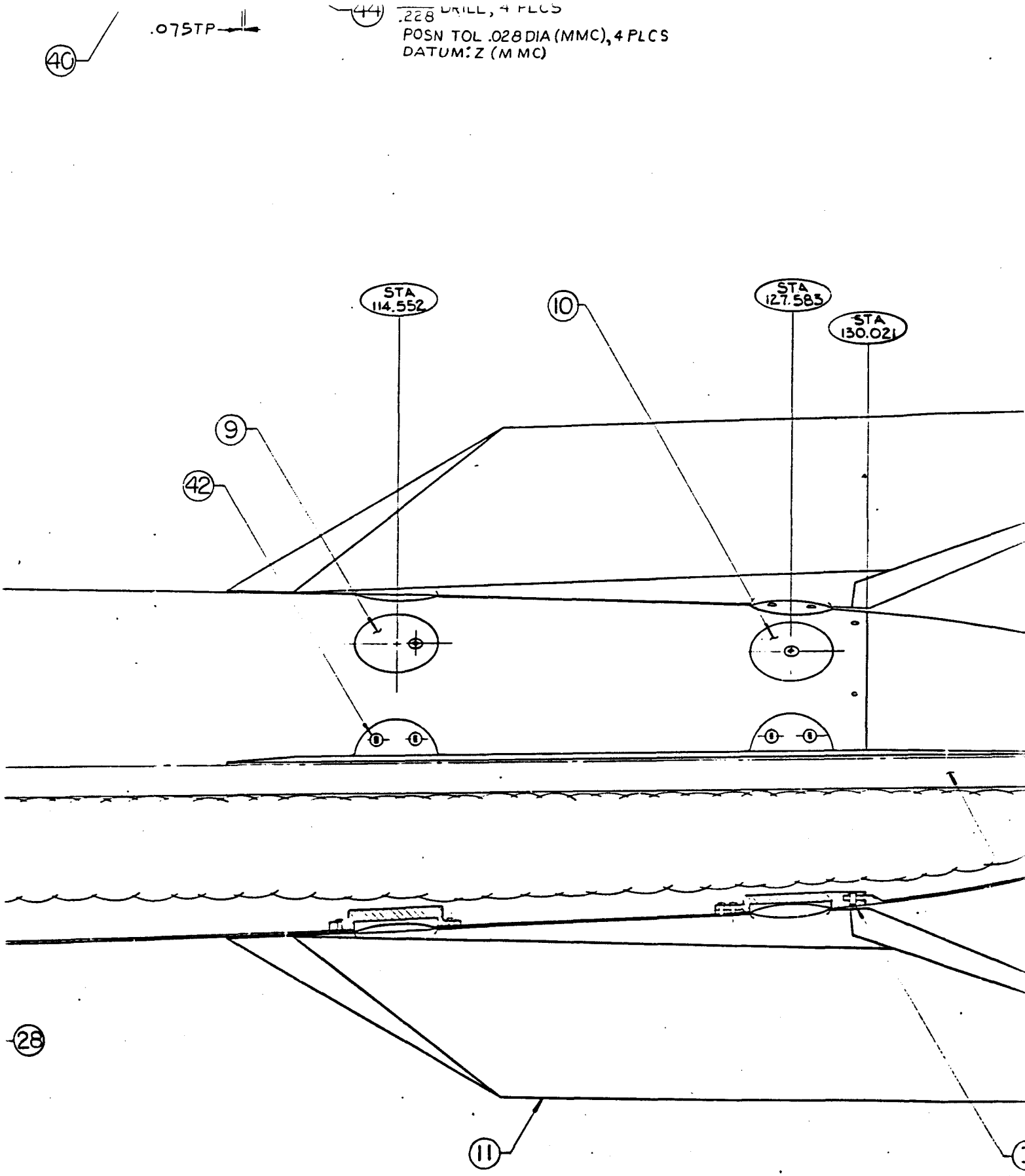

UNCLASSIFIED

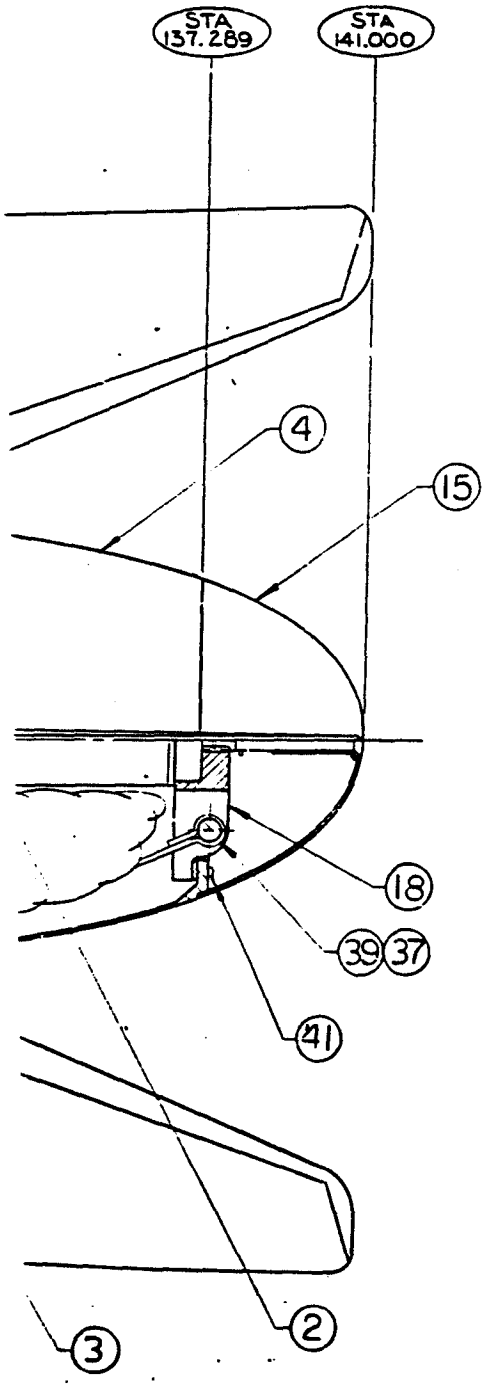

NO REQD	DESIGN AGENCY NO.	DESCRIPTION	MATERIAL AND SPECIFICATION	NOTE	SHEET ZONE	ITEM
1	N81859	PREFLIGT LUG PLATE (212 SERIES)				49
1	N81849	SHEAR PLATE (212 SERIES)				48
5	AN509-10R12	SCREW, MACH 100° CSK HD				47
5	AN363-1032	NUT, SELF LOCK				46
1	N81860	AFT LUG, MOD. (212 SERIES)				45
2	MS35225-44	SCREW, MACH, PAN HD				44
6	AN509-10R13	SCREW, MACH, 100° CSK HD				43
32	NAS1216-4-8	SCREW, PAN HD, "HI-TORQUE"				42
4	MS35456-23	SCREW, CAP, SOC HD				41
4	MS35193-58	SCREW, MACHINE 82° CSK HD				40
10	MS24665-285	PIN, COTTER				39
6	MS20392-7C67	PIN, FLAT HD				38
4	MS20392-7C57	PIN, FLAT HD				37
18	MS16997-37	SCREW, CAP, SOC HD				36
1	N65396	JUNCTION BOX, NO.2 (103)(ISS 1)				35
1	N77403	PULLOUT ADAPTOR ASSY NO.2 (103) (ISS 2)				34
1	N59546	TM INSTALLATION 101 (ISS. 2)		1		33
80	194092-00	SCREW, SPECIAL (ISS 1)				32
36	194091-00	SCREW, SPECIAL (ISS 1)				31
1	N52816	FORWARD BALLAST (ITEMS 1 & 3)(ISS 5)				30
1	———	CUTTER MECHANISM (MODIFIED)				29
1	(AF)	PARACHUTE (16 FT) (MODIFIED)				28
5	MS20006-8	BOLT, INTERNAL WRENCHING				27
1	311784-00	XMC 1835				26
5	MS35335-27	WASHER, LOCK				25
12	194079-00	SCREW, MACHINE (ISS 2)				24
1	192174-00	INSULATOR, THERMAL (ISS 2)				23
1	195303-00	DOOR, ACCESS (ISS 2)				22
1	N81865	CASE SECTION, PREFLIGHT-MOD.				21
1	192148-00	CASE SECTION, NOSE (ISS 2)				20
1	N81846	SUSPENSION LUG (212 SERIES)				19
1	192125-00	DEPLOYMENT PLATE (MACHINED) (ISS 3)				18
1	192114-00	SPACER (ISS 3)				17
1	188923-00	CABLE ASSY (P/O) (MODIFIED)				16
1	186753-00	CAP AND BOLT, REAR (ISS 3)				15
1	186774-00	SLEEVE (ISS 3)				14
1	186733-00	RING, EXTERNALL THREADED (ISS 3)				13
1	186735-00	CASE EXTENSION, NOSE (ISS 2)				12
4	186730-00	FIN (ISS 3)				11
4	180397-00	COVER AND SCREW, AFT (ISS 2)				10
4	180396-00	COVER AND SCREW, FWD (ISS 2)				9
1	180391-00	CASE SECTION, REAR (ISS 5)				8
1	N81861	CASE SECTION, CENTER-, MOD.				7
6	180380-00	ROLLER				6
1	198021-00	SUPPORT, SUSPENSION LINE (ISS 3)				5
1	180370-00	CASE EXTENSION, REAR (ISS 3)				4
8	180364-00	PIN, SHEAR (ISS. 1)				3
1	180363-00	TUBE-PLUG (ISS 2)				2
1	180361-00	TUBE ALUMINUM-INSIDE (ISS 3)				1

— AR DENOTES AS REQD — X INDICATES FORMS OR DOCUMENTS

LIST OF MATERIAL

DWG CLASSIFICATION LEVEL: [redacted]

PART CLASSIFICATION: [redacted]

SHEET 1
ISSUE 3
SHEET INDEX

CLASSIFICATION CATEGORY: [redacted]

ORG	DATE	INITIALS
1513		C
4412		

MFG AGENCY APPROVALS

TITLE: TX-61 SLED. CHUTE EVALUATION

FIRST APPLICATION

SIZE: J

MFG AGENCY NO.

DWG NO. N65280

SCALE 1/2

DOC. REF. SYM.

SHEET 1 OF 1

GROUP 1 — EXCLUDED FROM AUTOMATIC DOWNGRADING AND DECLASSIFICATION

[redacted]

UNCLASSIFIED

2

UNCLASSIFIED

8 7

STA 0.000

STA 26.7

7 [redacted] 6

43

.218/.226 DIA THRU CSK 100°±2° TO
.390±.005 DIA - 6 HOL
POSN TOL .014 DIA (M M
5 PLACES, DATUM: X (M

STA 26.750

STA 44.894

17

14

30

19

24

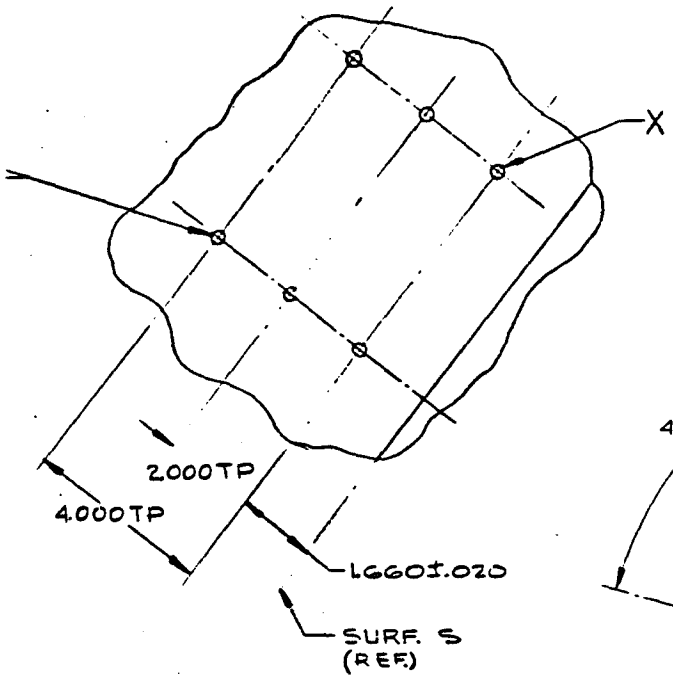
X
2.000TP
4.000TP
1.660±.020
SURF. S
(REF.)

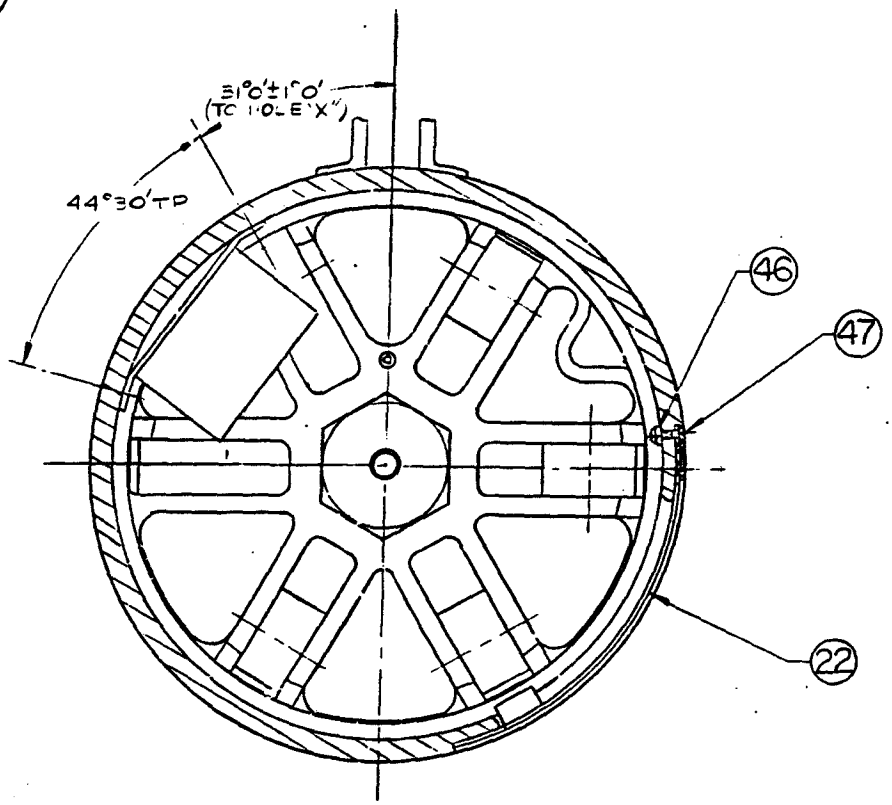
31°0'±1°0'
(TO HOLE "X")
44°30'TP
46
47
22

SECTION A-A

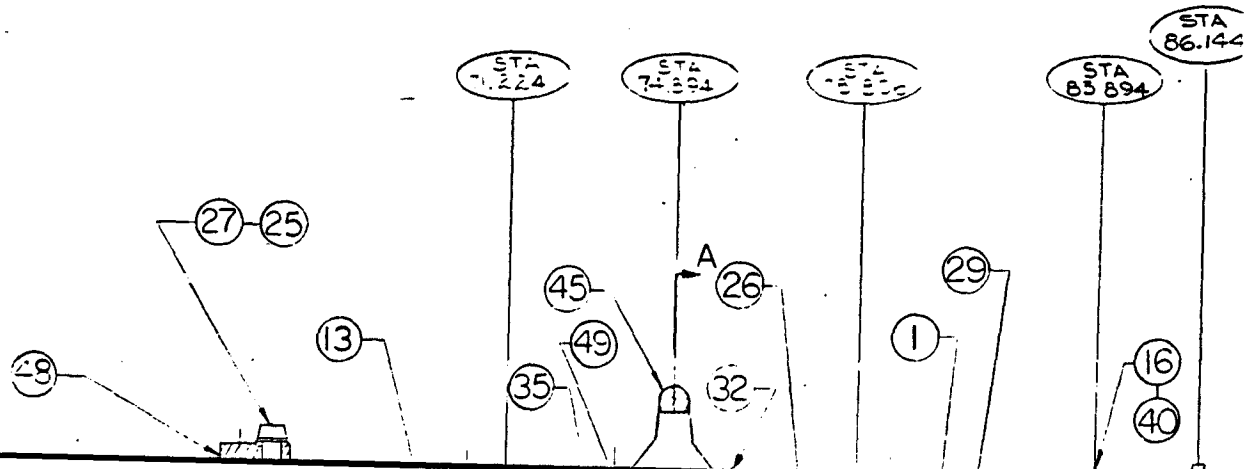
STA
71.224
STA
74.894
STA
83.894
STA
86.144
27
25
A
45
26
29
13
49
1
48
35
32
16
40

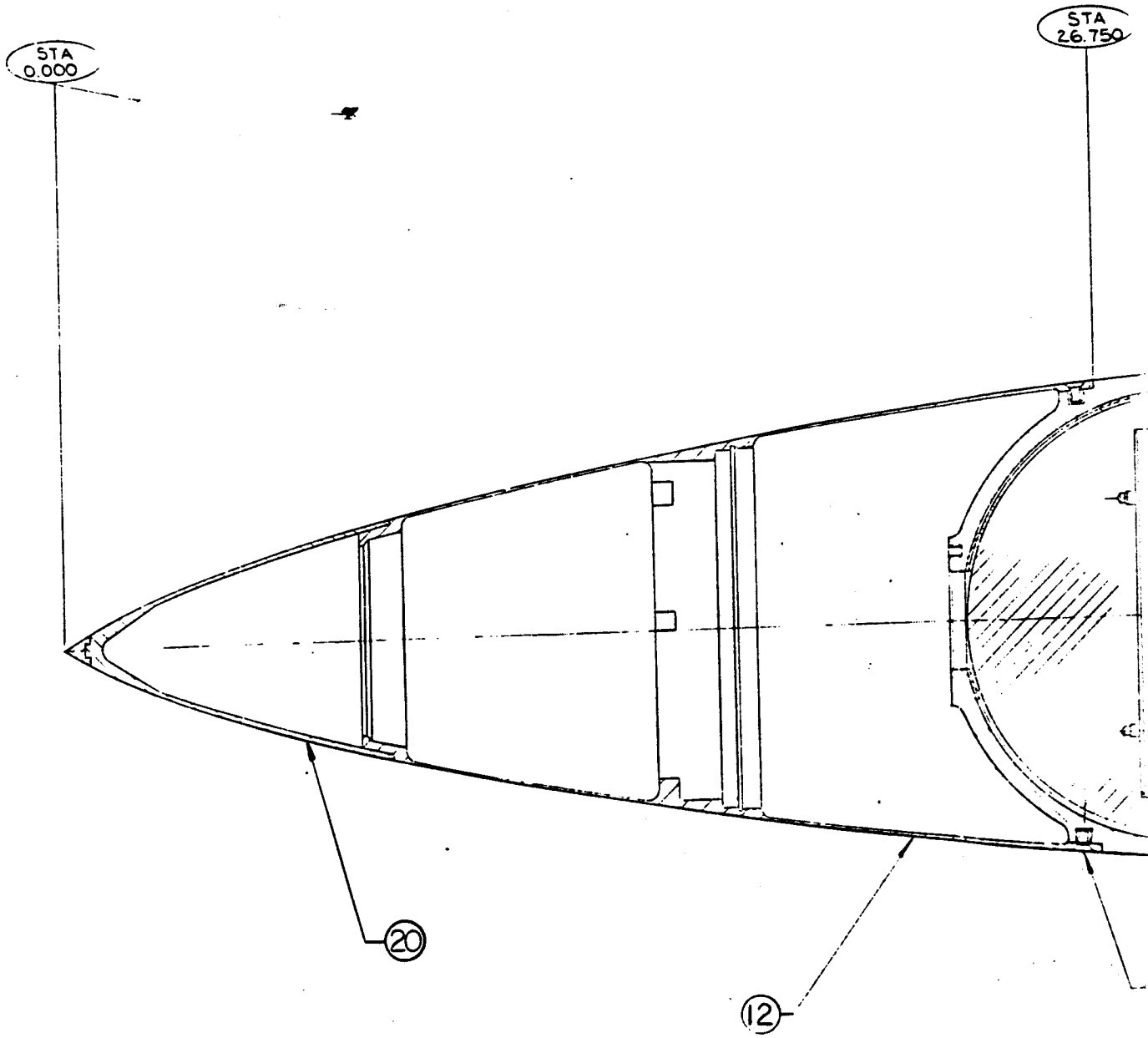

UNCLASSIFIED

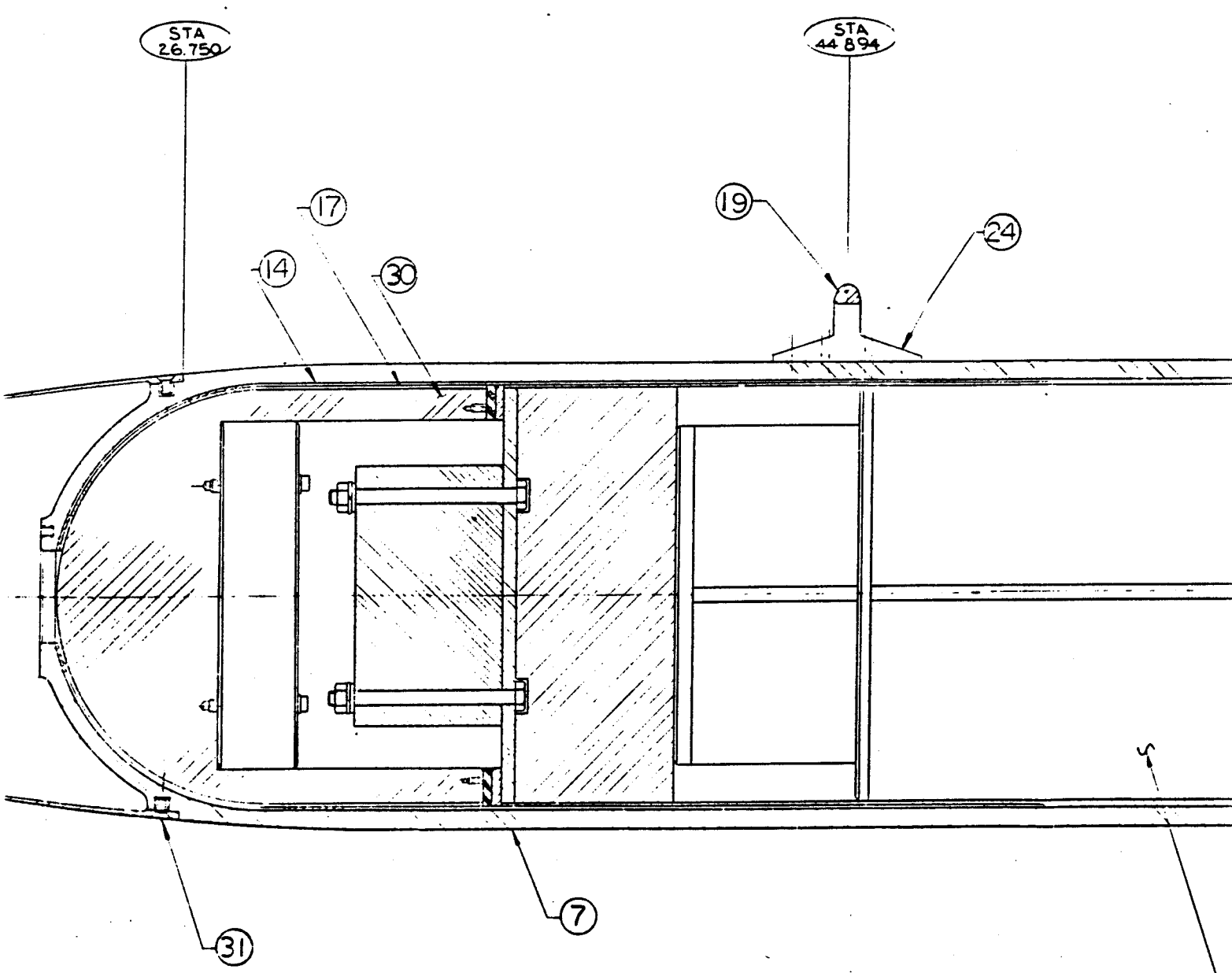

U... ASSIFIED

[redacted]

7. LWG NO. N65280 SHEET 1 OF 1 FRAME 2 of 2 6

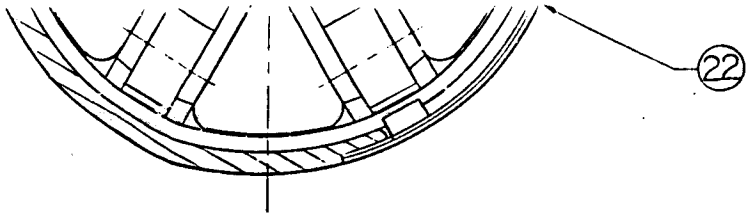

SECTION A-A

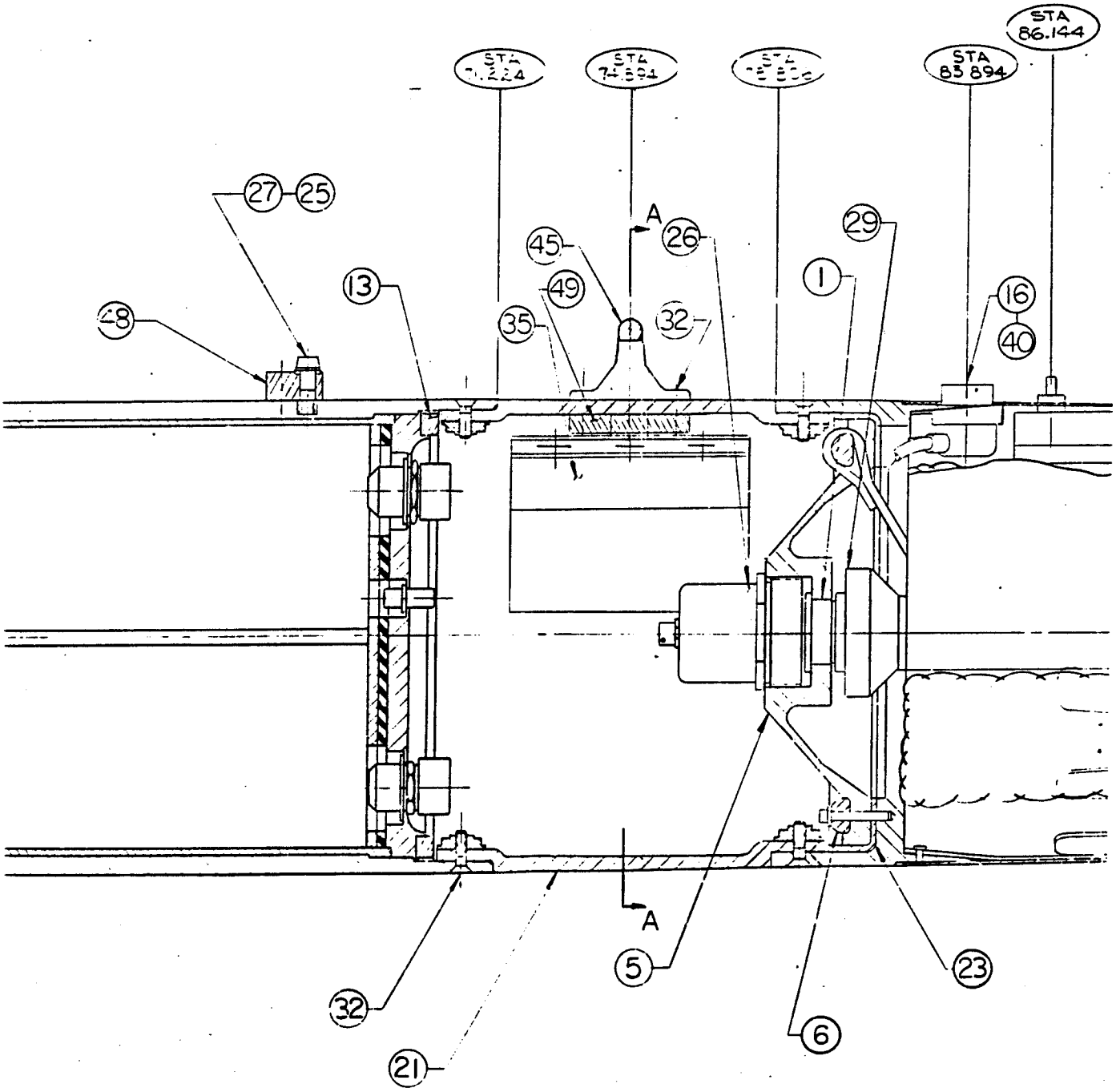

THIS PRINT WAS MADE FROM MICROFILM OF A REPRODUCIBLE. IF THE QUALITY IS NOT ADEQUATE PLEASE REQUEST A FULL SCALE PRINT.

UNCLASSIFIED

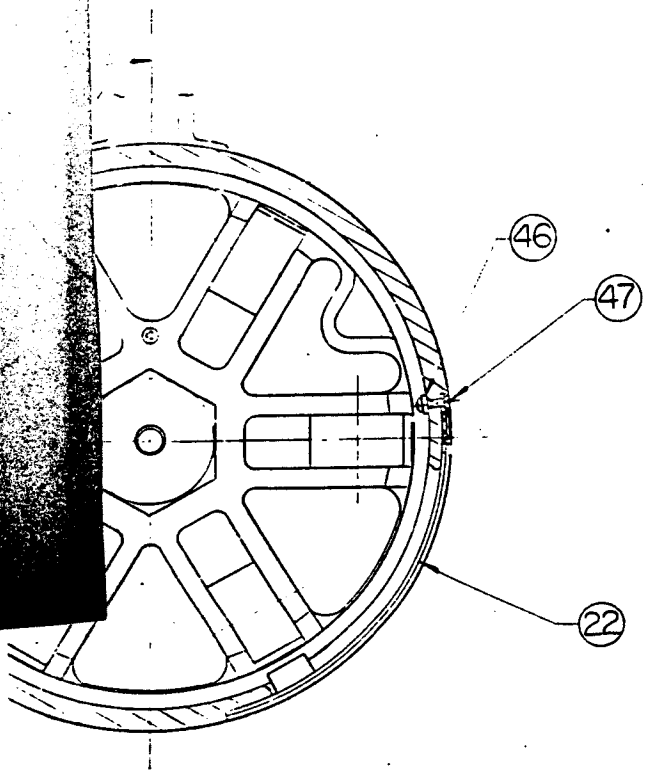

SECTION A-A

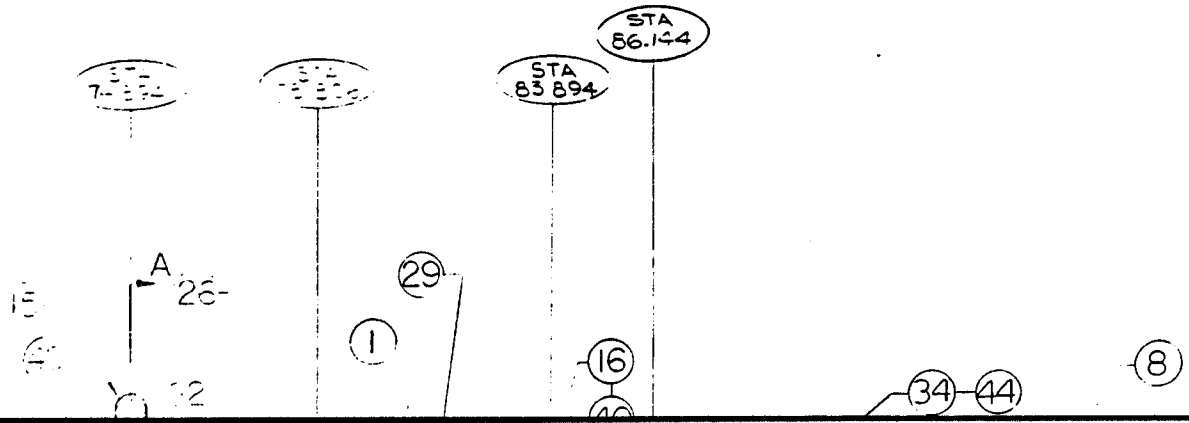

2 1 W.O. 61089

NOTES

1. FOR ADDITIONAL INFORMATION PERTAINING TO FIELD TEST EQUIPMENT, SEE DRAWING NUMBER N59546.

1		BASSINGER, R. DORNEMAN, E. 4412-5	7-6-64		
2		ADDED: 212-2 DESIGNATION AND ITEM 45 DELETED: ITEM 27 AND NOTE 2 CHANGED: ITEM 5 WAS 180372-00; ITEM 19 WAS 194059-00; ITEM 25 WAS 186792-00; ITEM 34 WAS N60473; ITEM 35 WAS N60418; ITEM 38 WAS 12 REQ.; ITEM 39 WAS 16 REQ. ITEM 40 WAS MS35192-42; ITEM 43 WAS MS35193-72. MAYER CO 2212-5	[illegible]		
3		ADDED: ITEMS 25, 27, 48 & 49; 212-3 DESIG. CHANGED: 7, 19, 21 & 45 SOLOMKO, A 2212-5			
4		ADDED: 212-4 DESIGNATION. CHANGED: ITEM 5 WAS 198021-00; ITEM 6 WAS 180380-00; ITEM 8 WAS 155 5; ITEM 12 WAS 186735-00 ITEM 17 WAS 192114-00; ITEM 20 WAS 192148-00; ITEM 23 WAS 192174-00; ITEM 34 WAS N77403; ITEM 35 WAS N65396; ITEM 44 WAS MS35225-44, SCREW, MACH, FAN HD DELETED: ITEMS 36, 38, & 39; VIEW C-C RODZEWICH, J.J. 2212-5	[illegible]		

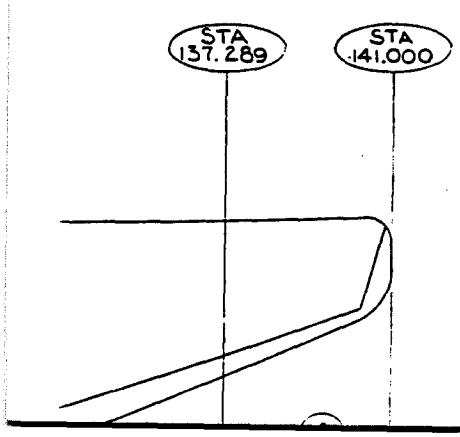

1	N81859	PREFLIGHT LUG PLATE (212 SERIES)				49
1	N81849	SHEAR PLATE (212 SERIES)				48
5	AN509-10R12	SCREW, MACH 100° CSK HD				47
5	AN363-1032	NUT, SELF LOCK				46
1	N81860	AFT LUG, MOD. (212 SERIES)				45
4	AN509-10R5	SCREW, MACH 100° CSK HD 10-32 x 11/32 LG				44
6	AN509-10R13	SCREW, MACH, 100° CSK HD				43
32	NAS1216-4-8	SCREW, FAN HD. "HI-TORQUE"				42
4	MS35456-23	SCREW, CAP, SOC HD				41
4	MS35193-58	SCREW, MACHINE 82° CSK HD				40
						39
						38
4	MS20392-7C57	PIN, FLAT HD				37
						36

SLED, CHUTE EVALUATION TEST VARIATIONS

DWG NOS.		TEST NO.
1		212-1
2		212-2
3		212-3
4		212-4

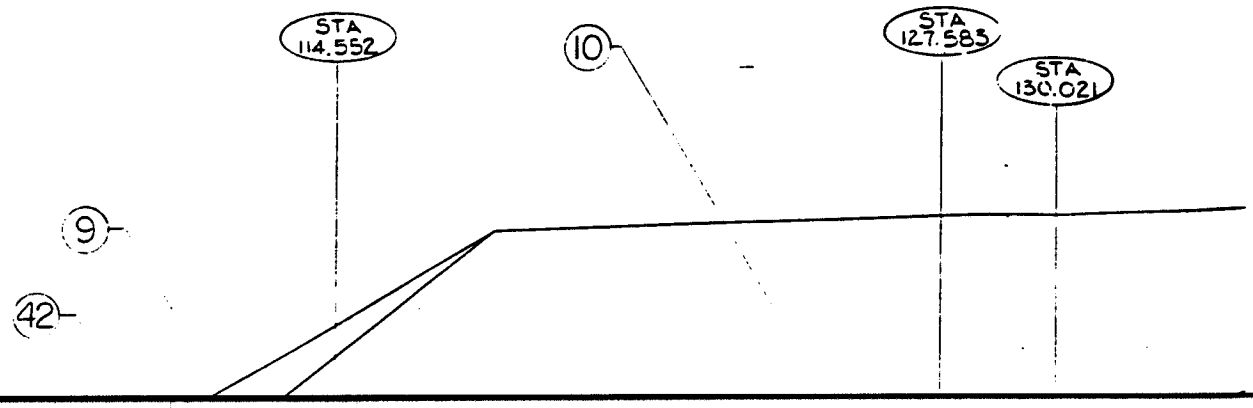

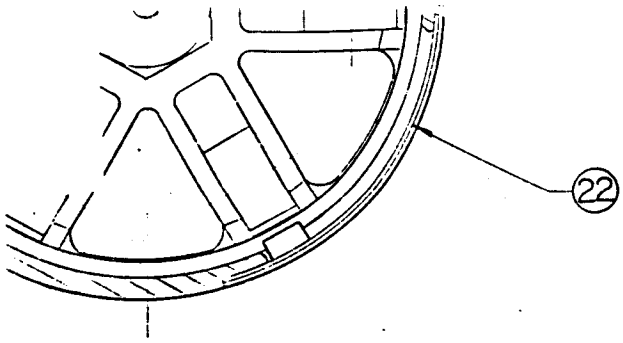

SECTION A-A

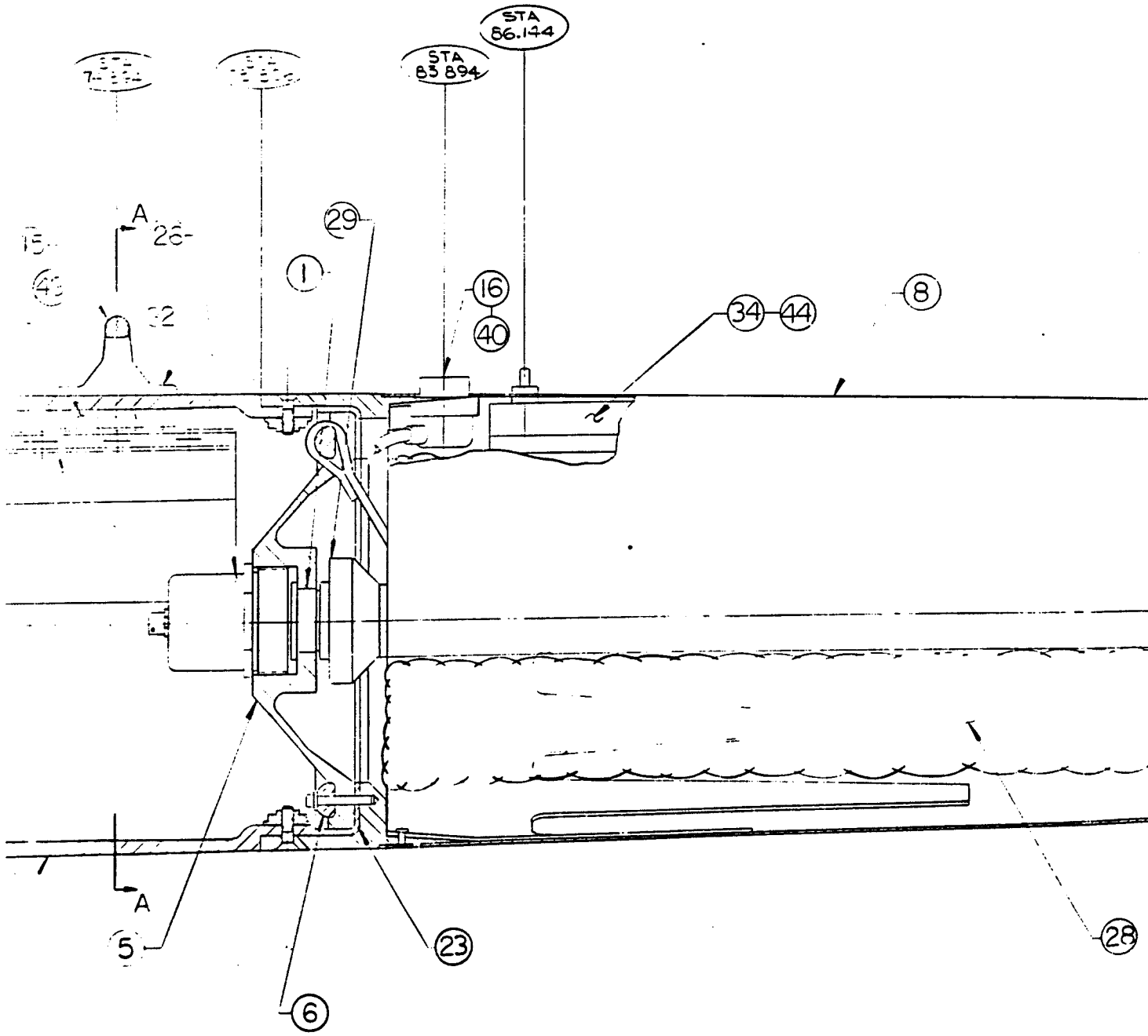

UNCLASSIFIED

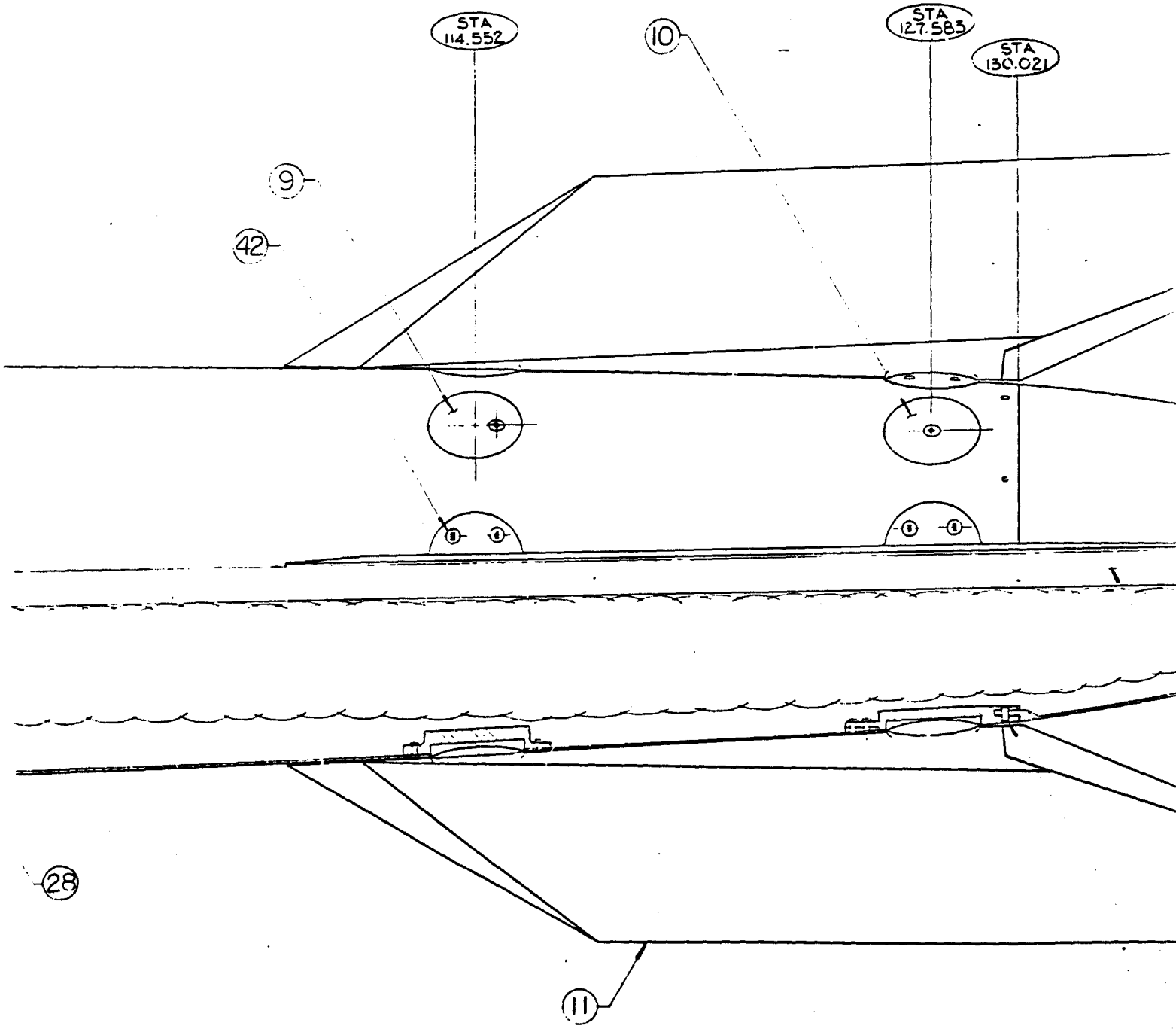

UNCLASSIFIED

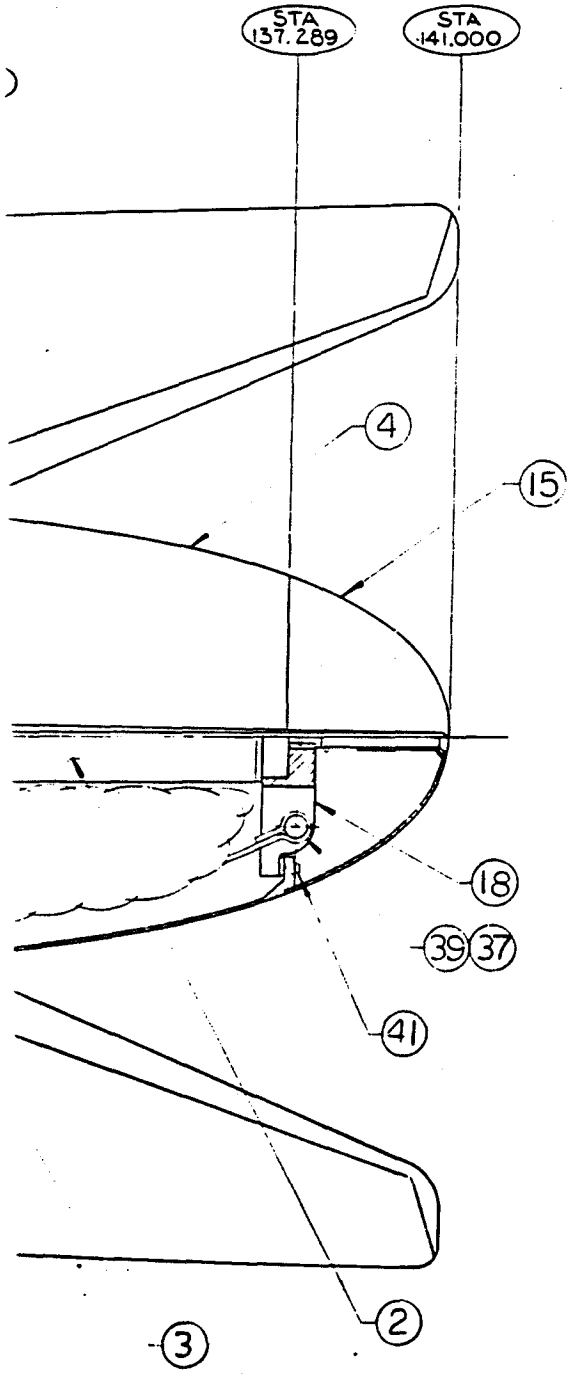

1	N81859	PREFLIGHT LUG PLATE (212 SERIES)		
1	N81849	SHEAR PLATE (212 SERIES)		
5	AN509-10R12	SCREW, MACH 100° CSK HD		
5	AN363-1032	NUT, SELF LOCK		
1	N81860	AFT LUG, MOD. (212 SERIES)		
4	AN509-10R5	SCREW, MACH 100° CSK HD 10-32 x 11/32 LG		
6	AN509-10R13	SCREW, MACH, 100° CSK HD		
32	NAS1216-4-8	SCREW, PAN HD. "HI-TORQUE"		
4	MS35456-23	SCREW, CAP, SOC HD		
4	MS35193-58	SCREW, MACHINE 82° CSK HD		
4	MS20392-7C-57	PIN, FLAT HD		
1	N54857	JUNCTION BOX, UNIVERSAL (BTS)		
1	N60447	PULSE INITIATOR (CLST) (ISS 1)		
1	N59546	TM INSTALLATION 101 (ISS. 2)		1
80	194092-00	SCREW, SPECIAL (ISS 1)		
36	194091-00	SCREW, SPECIAL (ISS 1)		
1	N52816	FORWARD BALLAST (ITEMS 1 & 3) (ISS 5)		
1	———	CUTTER MECHANISM (MODIFIED)		
1	(AF)	PARACHUTE (16 FT) (MODIFIED)		
5	MS20006-8	BOLT, INTERNAL WRENCHING		
1	311784-00	XMC 1835		
5	MS35338-27	WASHER, LOCK		
12	194079-00	SCREW, MACHINE (ISS 2)		
1	206105-00	INSULATOR, THERMAL (ISS 2)		
1	195303-00	DOOR, ACCESS (ISS 2)		
1	N81865	CASE SECTION, PREFLIGHT-MOD.		
1	1440105	RADOME (ISS C)		
1	N81846	SUSPENSION LUG (212 SERIES)		
1	192125-00	DEPLOYMENT PLATE (MACHINED) (ISS 3)		
1	N65257	SPACER (ISS 1)		
1	188923-00	CABLE ASSY (P/O) (MODIFIED)		
1	186753-00	CAP AND BOLT, REAR (ISS 3)		
1	186774-00	SLEEVE (ISS 3)		
1	186733-00	RING, EXTERNALL THREADED (ISS 3)		
1	N60483	NOSE CASE (STAINLESS STEEL) (ISS 2)		
4	186730-00	FIN (ISS 3)		
4	180397-00	COVER AND SCREW, AFT (ISS 2)		
4	180396-00	COVER AND SCREW, FWD (ISS 2)		
1	180391-00	CASE SECTION, REAR (ISS 17)		
1	N81861	CASE SECTION, CENTER, MOD.		
2	206104-00	RING HALF (ISS 3)		
1	206102-00	SUPPORT, SUSPENSION LINE (ISS 3)		
1	180370-00	CASE EXTENSION, REAR (ISS 3)		
8	180364-00	PIN, SHEAR (ISS 1)		
1	80363-00	TUBE-PLUG (ISS 2)		
1	180361-00	TUBE ALUMINUM-INSIDE (ISS 3)		

LIST OF MATERIAL

DWG CLASSIFICATION LEVEL: [redacted]

PART CLASSIFICATION: [redacted]

SHEET 1 ISSUE 4

SHEET INDEX

CLASSIFICATION CATEGORY: [redacted]

ORG	DATE	INITIALS
1515		
4412		

MFG AGENCY APPROVALS

TITLE: TX-61 SLED. CHUTE EVALUATION

FIRST APPLICATION

SIZE: J

MFG AGENCY NO.

DWG NO. N65280

SCALE 1/2

DOC REF. SYM.

SHEET 1 OF 1

GROUP 1 - EXCLUDED FROM AUTOMATIC DOWNGRADING AND DECLASSIFICATION

[redacted]

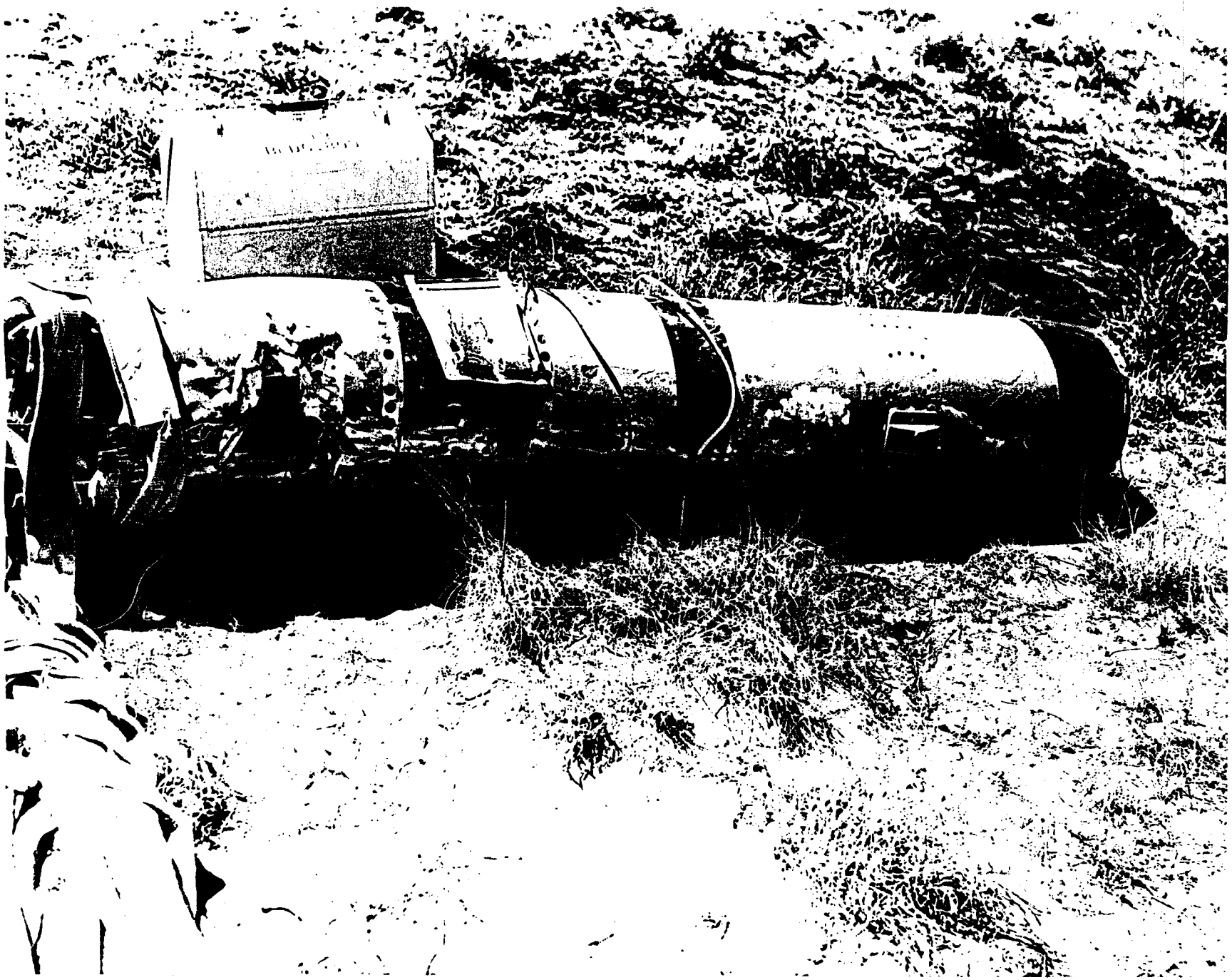

Figure 3

[redacted]

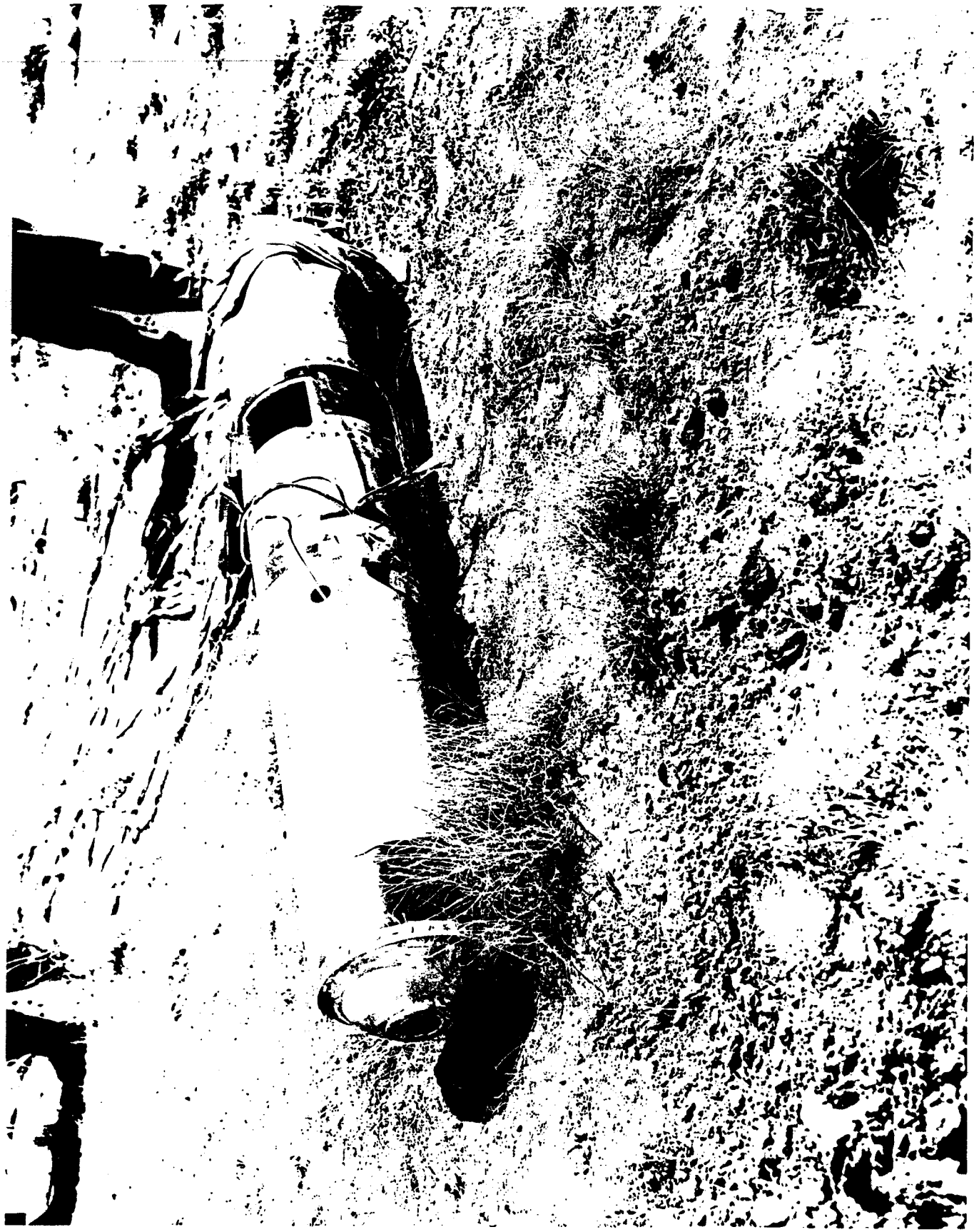

Figure 1

[redacted]

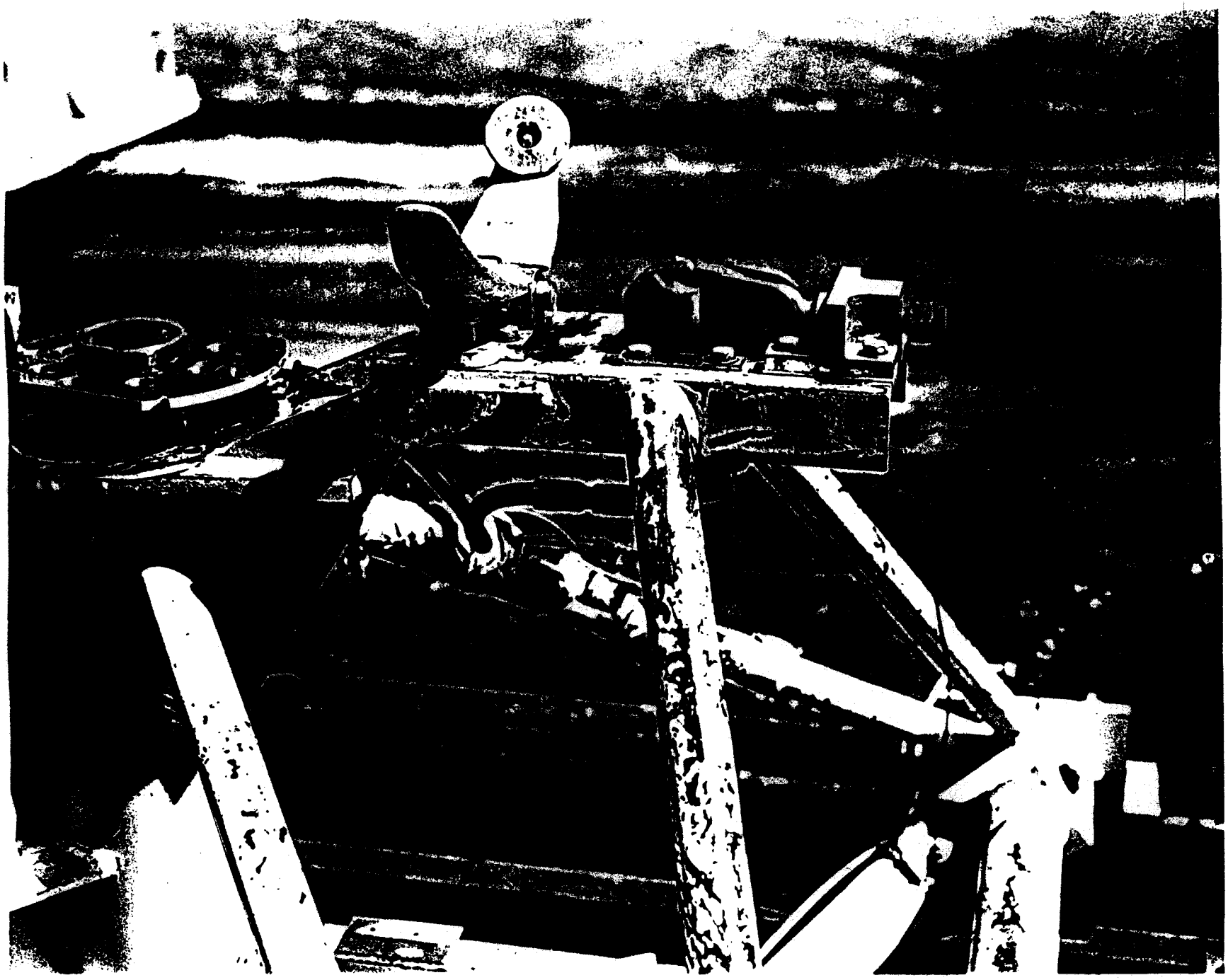

Figure 5

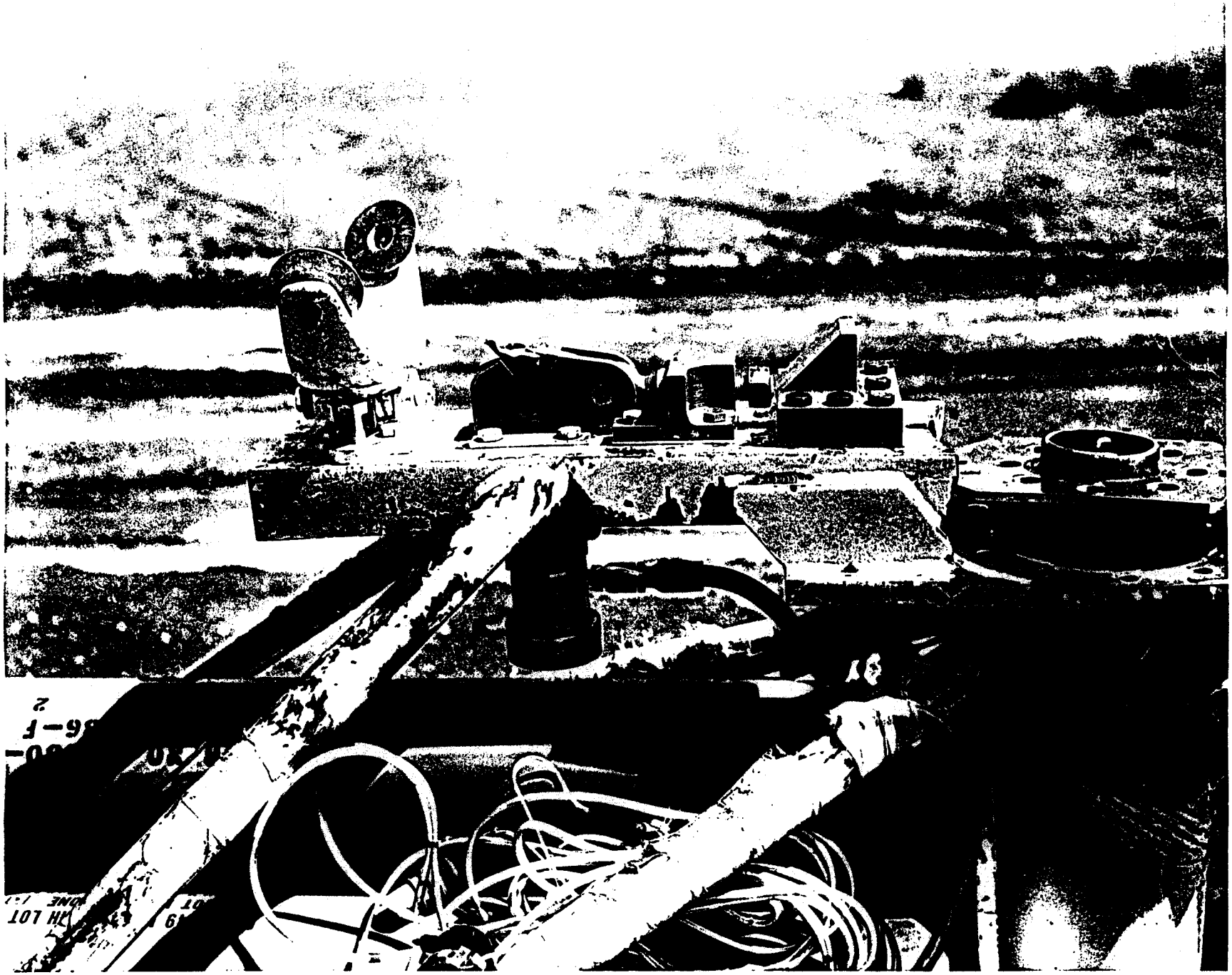

Figure 6

Figure 7