[redacted]

UNCLASSIFIED

SANDIA SYSTEMATIC DECLASSIFICATION REVIEW DOWNGRADING OR DECLASSIFICATION STAMP	
CLASSIFICATION CHANGED TO: U Emelda Seeph 8/4/97 PERSON CHANGING MARKING & DATE Carmela Gallegos 8/12/97 PERSON VERIFYING MARKING & DATE	AUTHORITY: W C Layne RECORD ID: 97SN3184 DATED: 7/31/97

SANDIA SYSTEMATIC DECLASSIFICATION REVIEW
1st Review Date: 7/29/97
Authority: DDC ADD
Name: [illegible]
2nd Review Date: 7-31-97
Authority: ADD W Layne
Name:
Determination (Circle Number):
1. Classification Retained
2. Classification Changed to: UNCL
3. Contains No DOE Classified Information
4. Contains Wdd:
5. Contains UCAI?
6. Comments:

SC-DR-65-636

TEST PLAN FOR TX-61 WEAPON TEST 100-16
(Title Unclassified)

~~AEC ATOMIC WEAPON DATA SIGMA 3~~

F. W. Millikin, R. D. Lindsey,
and L. A. Suber, 1512
Sandia Laboratory, Albuquerque

December 1965

Approved by: [signature] 12-16-65
D. M. Olson, 1510

ABSTRACT (U)

This report presents the proposed test plan for a free-fall test drop in the TX-61 weapon development program. Results of the test will be published in a supplemental document.

[redacted]

[redacted]

RECORD COPY
Do Not Take From This Room

UNCLASSIFIED

[redacted]

DISTRIBUTION:
Hq., FC/DASA, Sandia Base, Albuquerque, New Mexico,
Attn: Adj. General
For: Major R. E. Caudle, FC/DD-3
W. J. Denison, 1512
C. L. Carpenter, 1513
R. T. Othmer, 1541
J. T. Risse, 1542
W. R. Hoagland, 1544
R. W. DeVore, 2110
J. M. Wiesen, 2150
A. F. Cone, 2510
T. L. Pace, 7210
W. V. Hereford, 7215
H. S. North, 7216
R. C. Maydew, 9320
Attn: S. McAlees, 9325
E. A. Paxton, 8232
B. R. Allen, 3421
M. G. Randle, 3428-1
W. F. Carstens, 3410
Attn: J. R. Shunny, 3412
R. C. Smelich, 3415-3 (5)

[redacted]

[redacted]

[redacted]

UNCLASSIFIED

TABLE OF CONTENTS

	Page
Introduction	4
Test Objectives	4
Description of Test Vehicle	4
Instrumentation	5
Checkout Procedure	6
Data Format	6
Data Distribution for 100-16	10

UNCLASSIFIED

[redacted]

[redacted]

UNCLASSIFIED

TEST PLAN FOR TX-61 WEAPON TEST 100-16

Introduction

This plan is for a free-fall ballistic airdrop in the TX-61 test program and is intended to test aerodynamic stability of the 13.3-inch diameter system.

The drop will be made on the dry lake target of the Tonopah Test Range under the following conditions:

Drop No.	100-16
Carrier	F-4C, or F-4B
Release Altitude	21,000 ft MSL
Ejection Velocity	8-15 fps
Attitude	90° LABS
Speed	Mach 1.0
Predicted Apogee	37,000 ft MSL

A parachute will be deployed late in the trajectory by a special timer so that the unit may be recovered.

Test Objectives

1. To determine the stability of the 13.3-inch-diameter TX-61 shape during free fall, when released in 90° LABS maneuver.

2. To determine trajectory and drag coefficient for the larger diameter.

3. To permit a comparison between the ballistic performance of the old, small-diameter units and that of the 13.3-inch-diameter units.

Description of Test Vehicle

Mechanical

Figure 1 defines the weapon assembly for Test 100-16. The test vehicle will be 13.3 inches in diameter and 141.6 inches long, and will weigh 700 ± 10 pounds. The CG will be at Station 59.6 ± 0.25.

The nose will be one piece with a dummy radar. The center case (which will contain no SS material) will have a ballast system of foam and steel located forward, and the telemetry package located aft. The center case will be closed with a special steel cover plate. Connector holes will be provided in the cover plate to furnish electrical access to the TM package.

UNCLASSIFIED

[redacted]

The preflight case will contain a simulated preflight control box (N81848) containing special timing devices.

The tail section will contain a bracket to hold the pullout cable connector, an MC1876 actuator, and a 17-foot diameter parachute. The parachute will be deployed late in the trajectory to permit recovery and reuse of the unit.

Electrical

Figure 2 defines the electrical system for Test 100-16. An XMC1876 pulse actuator and a MAT control box will be used to initiate the XMC1951 spin rocket approximately 0.3 second after release. An MC1356 timer will also be initiated at this time. After the time selected on the MC1356, the parachute will be deployed for recovery purposes. A CF1806 pullout cable will be used.

Explosive Components

The explosive components in the weapon assembly are: (1) the XMC1951 spin rocket, which contains 140 mg of normal lead styphnate, 2.02 gm of boron potassium nitrate, and 1.8 pounds of polysulfide ammonium perchlorate; and (2) an XMC1835 gas generator, which contains 335 mg of basic lead styphnate, 1.5 gm of boron potassium nitrate, and 105 gm of IMR 4350.

Instrumentation

Data will be collected by camera coverage and radio-frequency FM/FM telemetry link with ground stations. Camera coverage is required to obtain and document data on aircraft separation and trajectory. This coverage will be provided by cameras located on the aircraft and on the ground. As much coverage as feasible on the following should also be provided: chase plane coverage of release and separation, unit trajectory to apogee, and trajectory to chute deployment.

A 16-mm print of trajectory and aircraft separation will be delivered to Divisions 1512 and 1513 (one print to each) within 5 days of the test. Still photographs of the unit installed on the aircraft, showing the pullout area, clearances with aircraft structure, and any other pertinent details will be sent to Division 1512 within 10 days of the test.

Telemetry information is required on the following characteristics:

1. Roll: Continuous. A frequency response of 20 cps is required.
2. Yaw: ±85 degrees. A frequency response of 20 cps is required.
3. Pitch: Continuous. A frequency response of 20 cps is required.
4. Ejection velocity: 0-15 fps. A frequency response of 200 cps is required.

5. Closure of radial switches 1 and 2: A frequency response of 50 cps is required.

6. Pulse Battery 1 and 2: 0-32 volts. The pulse battery output will be monitored until the time-delay relays operate. A frequency response of 100 cps is required.

7. Solar cell: 0-5 volts. A solar cell mounted in the skin of the unit in the nose will indicate roll rate. A frequency response of 50 cps is required.

8. Longitudinal acceleration: -20, +200 g. A frequency response of 50 cps is required.

Checkout Procedure

The firing system and telemetry will be completely checked out before assembly. The unit will then be assembled with a dummy XMC1835 gas generator and a dummy XMC1951 spin rocket. The roll and pitch moments of inertia will be determined, and a dynamic balance check will be made to determine the imbalance of the unit.

The explosively charged spin rocket and the gas generator will be installed in Building 6020 in accordance with existing safety procedures. The unit will be shipped to KAFB just before the test date.

Before takeoff, the telemetry system and the arming-safing portion of the rocket firing system will again be checked. The telemetry will be operated on aircraft power by turning the AMAC system to the SAFE position far enough in advance of drop time to permit a check of the various signals. The telemetry system will then be switched to internal power by turning the AMAC system to the GND position, at which time the various signals will once more be checked. At the same time, the AMAC warning light will give an indication that the rocket firing system is armed. If the telemetry signals or the AMAC indications are not satisfactory, the test will be canceled.

Data Format

Optical Data

The following data, with respect to time, are required in tabular form. A frame-by-frame reading is desired. Smoothed data with 3-point velocity computation are desired in these categories:

1. Altitude (ft)
2. Range (ft)
3. Drift (ft)
4. Trajectory angle with respect to air (deg)
5. Total velocity with respect to air (fps)

6. x, y, and z components of velocity with respect to air (fps)
7. Mach number
8. x and y components of wind (fps)
9. Dynamic pressure (lb/ft^2)
10. Speed of sound (fps)
11. Air density (lb/ft^3)
12. Ambient pressure (in. Hg)
13. Calibrated air speed (knots)
14. Drag coefficient
15. Acceleration (g).

Telemetry Data

One annotated oscillograph record is required for each test. This record (recommended drive speed: 1 inch per second) is desired from 10 seconds before release to impact. The following signals, deflections, and notations are desired:

1. Ejection velocity: Maximum deflection. Peak value noted.

2. Pulse battery 1 and 2: Maximum deflection. Rocket firing time noted.

3. Roll: Maximum deflection or 2 inches, whichever is less. Peak values and roll rate at closure of radial switches noted.

4. Yaw: Maximum deflection or 2 inches, whichever is less. Peak values noted.

5. Pitch: Maximum deflection or 2 inches, whichever is less. Peak values noted.

6. Solar cell: Maximum deflection. Peak values noted.

7. Longitudinal acceleration: Maximum deflection. Peak values noted. Time noted.

A preliminary short record of the above is to be delivered to Divisions 1512 and 9325 within 2 days after the test.

In addition to the annotated oscillograph records, it is requested that the "Standard Plot Package for Free-Fall Bomb Drops--Weapon Programs" (Appendix B, Chapter S-49 of the Sandia Laboratory Engineering Manual) be provided.

Plots of the vertical velocity, weapon displacement from the aircraft, longitudinal acceleration, and roll rate are required, all with respect to time from release. The format is shown on page 9.

A preliminary test report containing test conditions and preliminary test results is to be delivered to Divisions 1512 and 1513 within 10 days of the test.

Units, Scale, and Range

Data Format	SLEM S-49 1/22/65 Page	Ordinate	Abscissa	Remarks
Roll rate	-	0.5 rps/div 0 to 10 rps	Time; 5 sec/div 0 to 100 seconds	
Roll rate	-	0.5 rps/div 0 to 10 rps	Time; 0.5 sec/div 0 to 10 seconds	
Electrical data	C-1	Voltage; 2 v/div 0 to 40	Time; 0.1 sec/div 0 to 2 seconds	Pulse battery No. 1 and 2
Ejection velocity	-	Velocity; 2 fps/div 0 to 40 fps	Time; 10 msec/div 0 to 200 msec	Mark 1g line
Displacement*	-	Distance; 2 in./div 0 to 40 inches	Time; 10 msec/div 0 to 20 msec	Mark ejector stroke length and ejector stroke length plus 6 inches.
Longitudinal acceleration	-	Acceleration; to appropriate scale	Time; 0.2 sec/div	

*Plot on ejection-velocity graph if possible.

UNCLASSIFIED

UNCLASSIFIED

Data Distribution for 100-16*

	W. V. Hereford, 7215	S. McAlees, 9325	J. T. Risse, 1542	W. J. Denison, 1512	C. L. Carpenter, 1513	APGC (PGWRB) Attn: Chief, Bomb Ballistics Div., For: Marjorie Field Eglin Air Force Base, Fla.	Naval Weapons Lab., Dahlgren, Va.	Hq., FC/DASA: Attn: Adj. Gen., For: Maj. R. E. Caudle, FCDD3
Preliminary Test Report	x	x		x	x			x
Data Reduction Report	x	x	x	x	x	x	x	
Plots: Roll Rate versus Time	x	x		**	x			
Ejection Velocity and Displacement	x	x	x	**	x	x	x	
Standard Free-Fall Package	x	x		**	x	x	x	
Annotated Record:	x	x		x	x	x	x	

*Distribution for high-speed films and still pictures is given on the next page.

**Copy plus reproducible.

Copies of the 16-mm film, both documentary and aircraft, should be distributed to:

Naval Weapons Lab., Dahlgren, Va.
W. J. Denison, 1512
C. L. Carpenter, 1513
W. V. Hereford, 7215
S. McAlees, 9325

Copies of the documentary still pictures should be distributed to:

W. J. Denison, 1512
W. V. Hereford, 7215

NOTES

FOR ADDITIONAL INFORMATION PERTAINING TO FIELD TEST EQUIPMENT, SEE DWG. NO. M75230.

FOR FREE FALL TESTS USING ITEM 14 (MC1887), THE ENERGY ABSORBER (N91534) OF ITEM 1 (NOSE ASSY) IS OMITTED.

> FOR MODIFICATION OF ITEM 3 (PREFLIGHT CASE SECTION), SEE SECT B-B.

DESIGN AGENCY PART [redacted] NO.
N96999-000

REVISIONS

ISSUE	SHEET ZONE	DESCRIPTION (PREPARED BY)	DATE	CHKR	ENGR
1		C. WEDBERG Ⓔ 2212-5	9-3-65		
2		ADDED: NOTES 1 & 2; ITEM 23 C. WEDBERG Ⓔ 2212-5	9-1-65		
3		ADDED: 100-15 DESIGNATION; ITEMS 24 & 25; NOTE 3 CHANGED: NOTE 2 RODZEWICH, J. J. 2212-5	9-27-65		
4		ADDED: NOTE 4 CHANGED: ITEM 21 WAS PHASE 1. DELETED: ITEM 24 ALVINO, D.J. 2212-5	10-7-65		
5		ADDED: 100-16 DESIGNATION SECTION D-D; ITEMS 26 & 27 CHANGED: ITEM 11 WAS 1 REQ. DELETED NOTE 4 MAYER CO 2212-5	11/10/65		

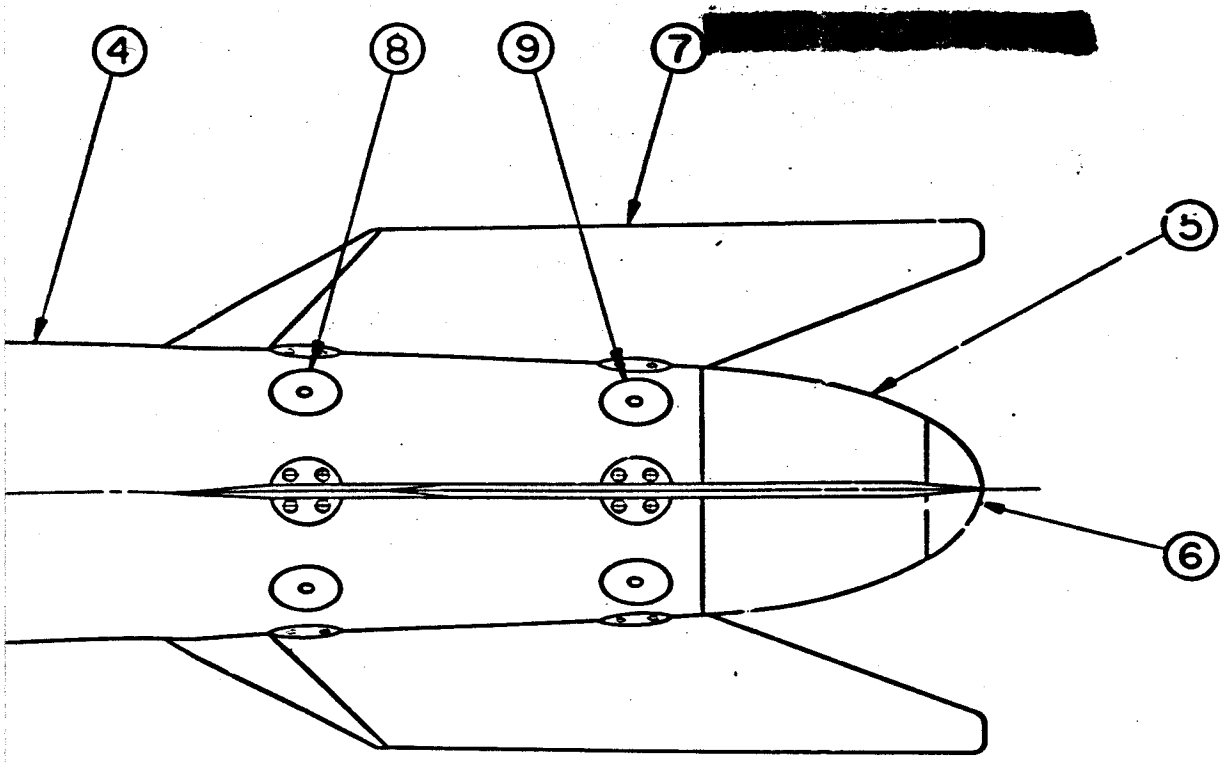

	1			311818-00	MC 1876			27
	1			N81848	CONTROL BOX ASSY (M.A.T.)			26
	2	2	2		MICRODOT CONNECTOR			25
								24

1. FOR ADDITION
EQUIPMENT, S
2. FOR FREE
THE ENER
(NOSE AS
3. FOR MODI
CASE SEC

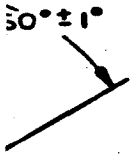

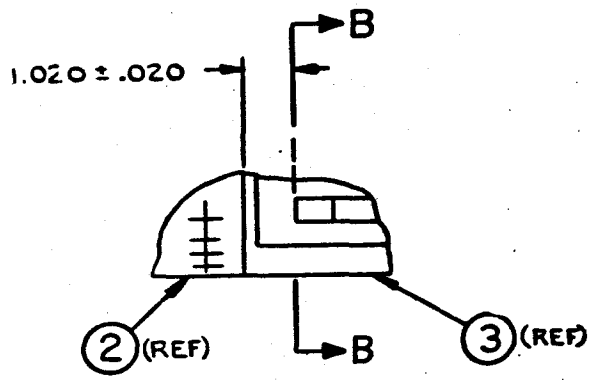

B-B
AFT)
2

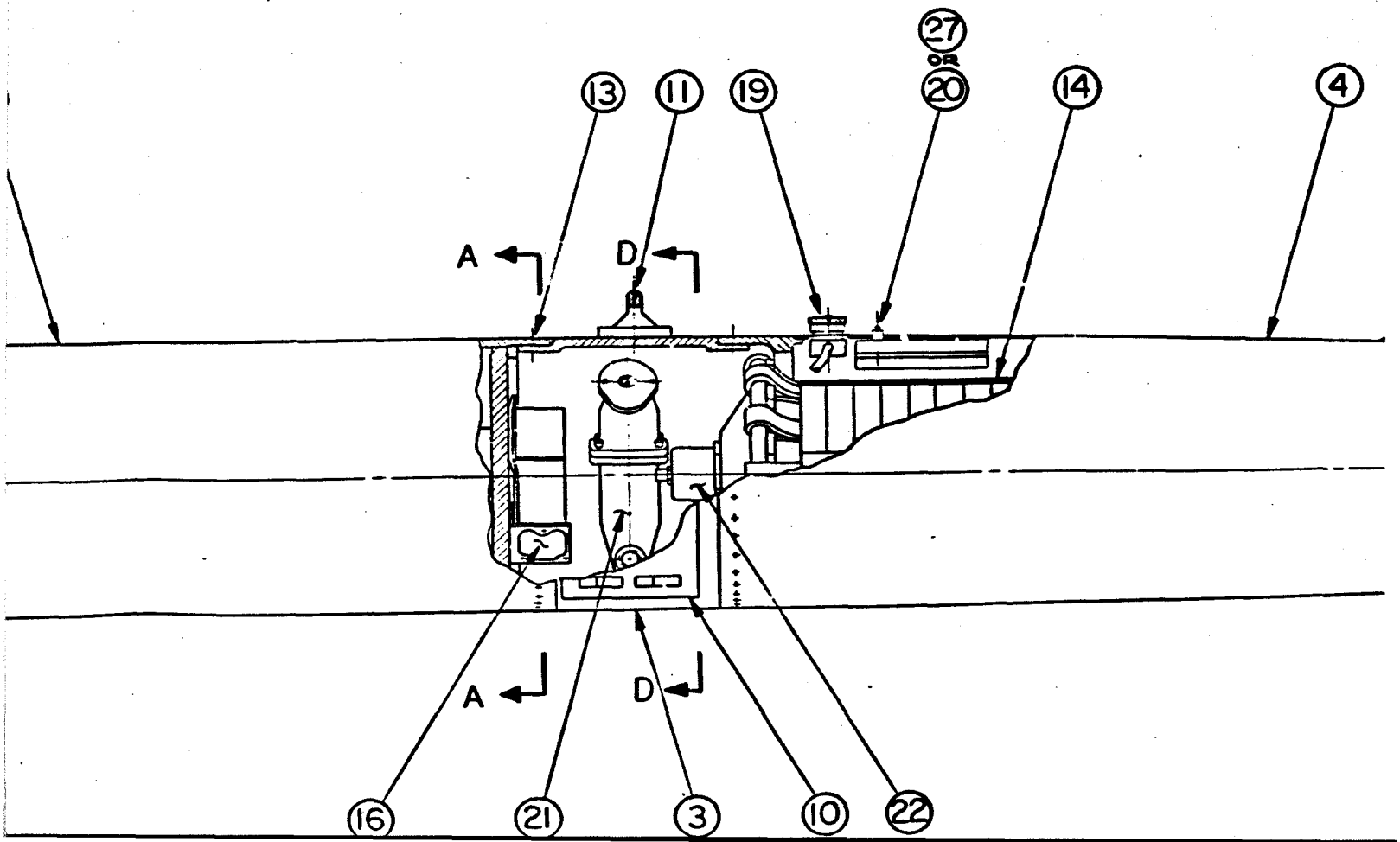

UNCLASSIFIED

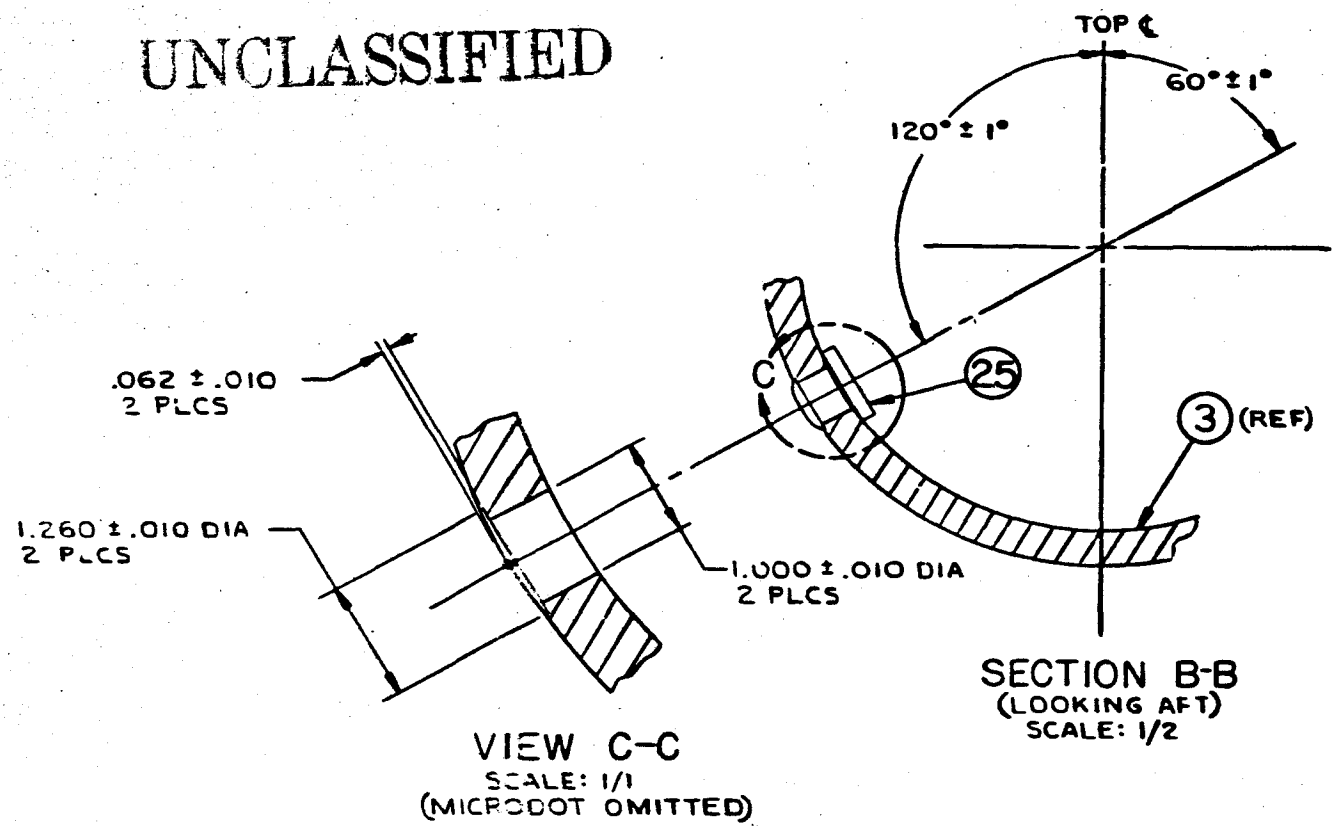

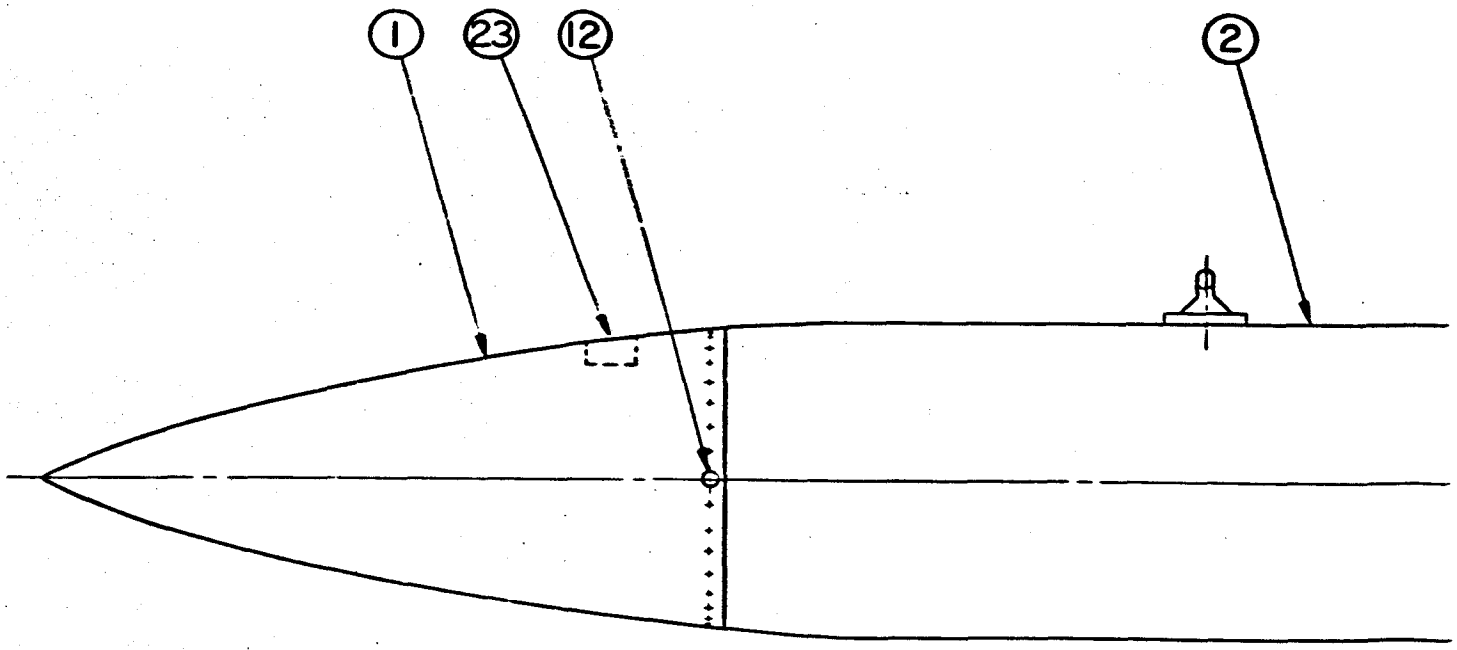

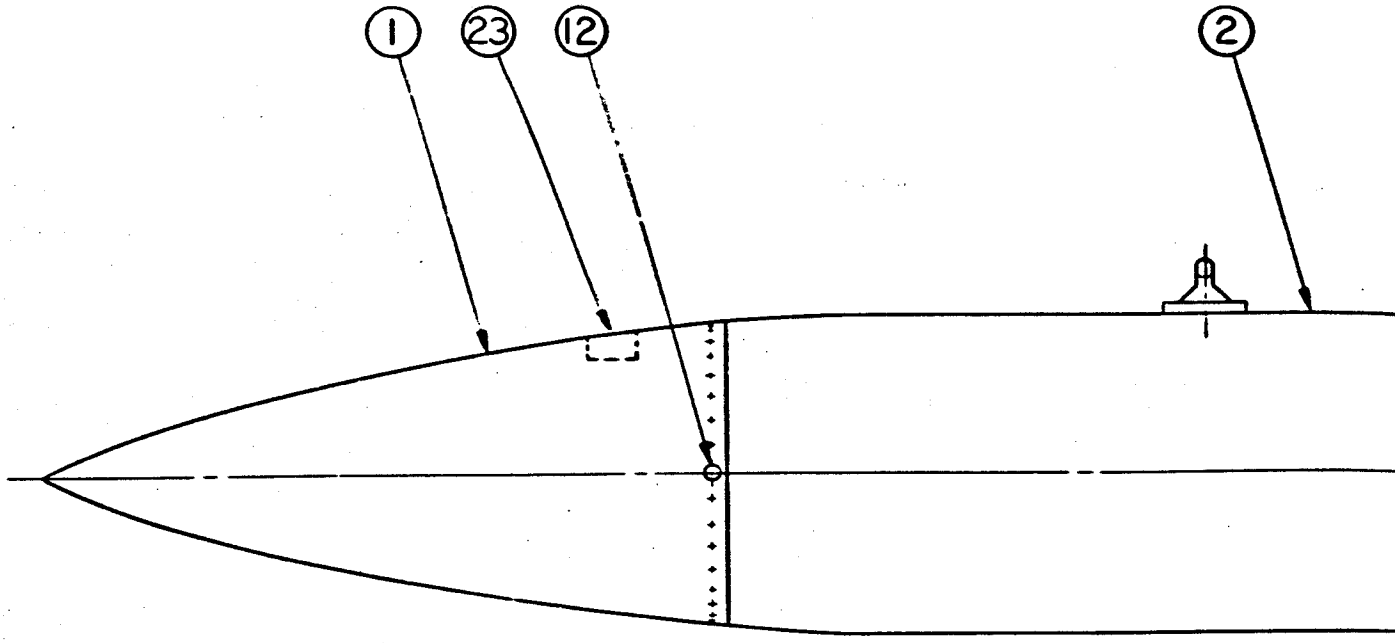

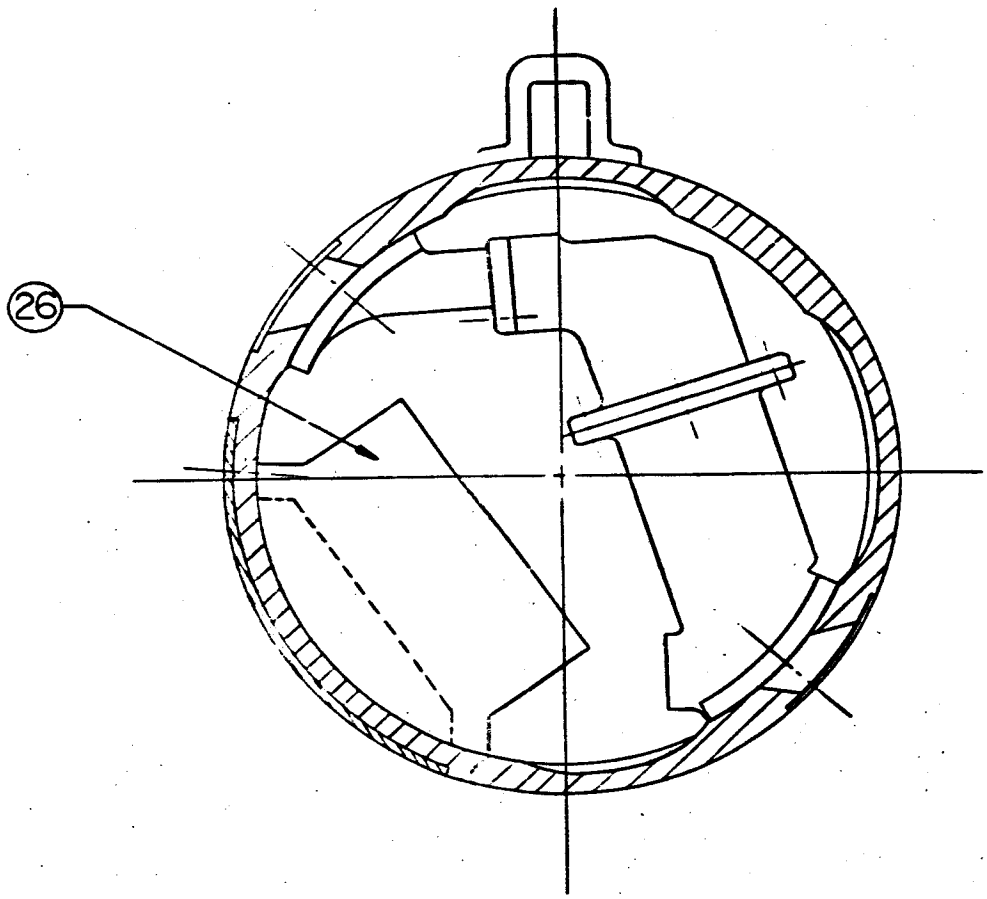

15

SECTION D-D
SCALE: 1/2

UNCLASSIFIED

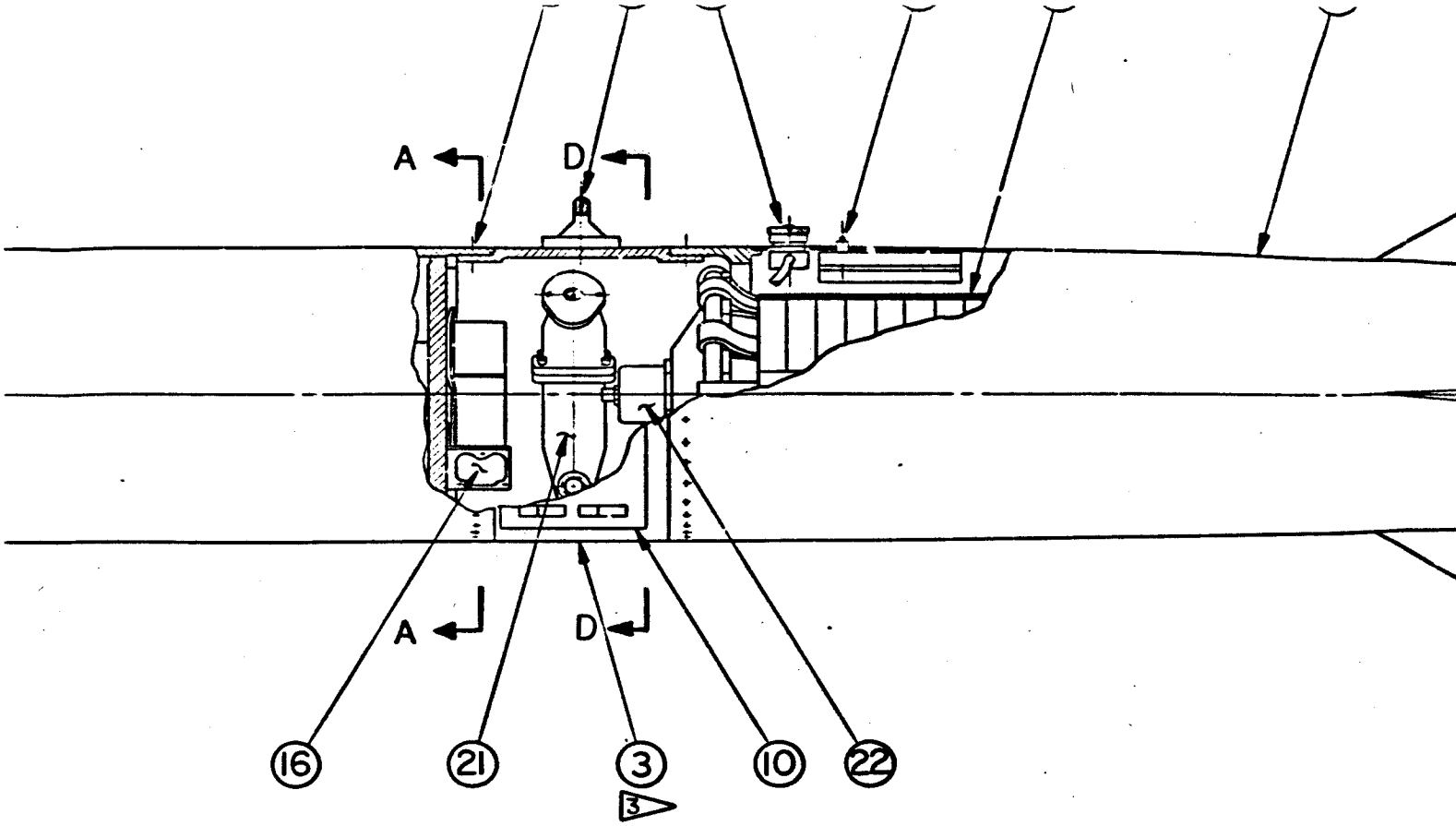

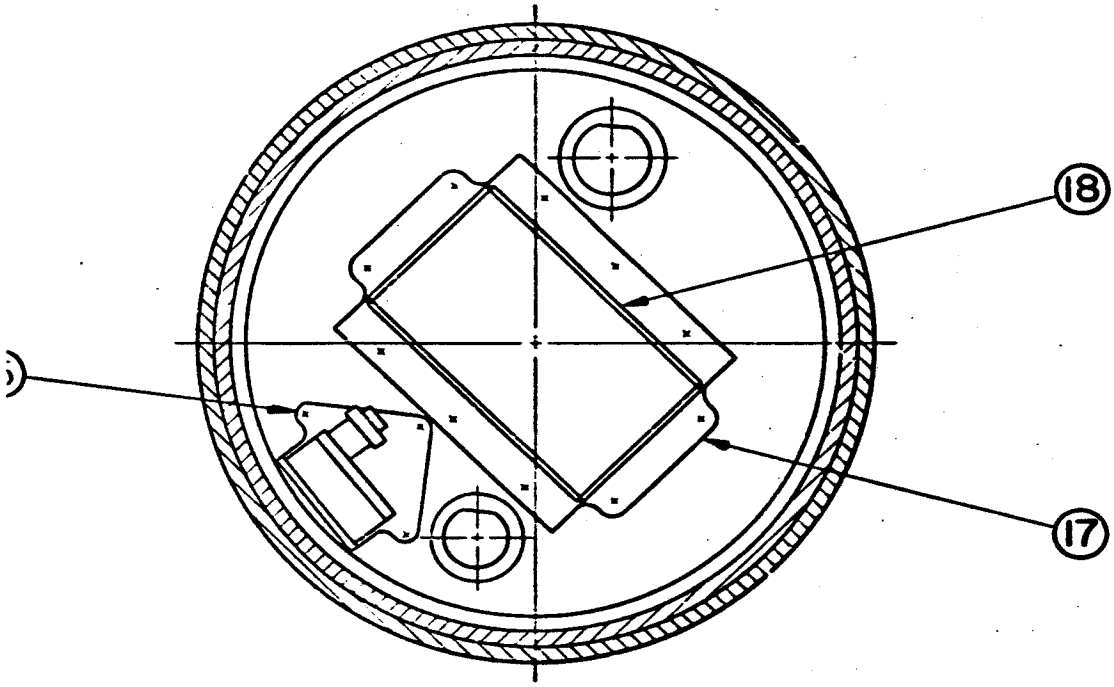

SECTION A-A
SCALE: 1/2

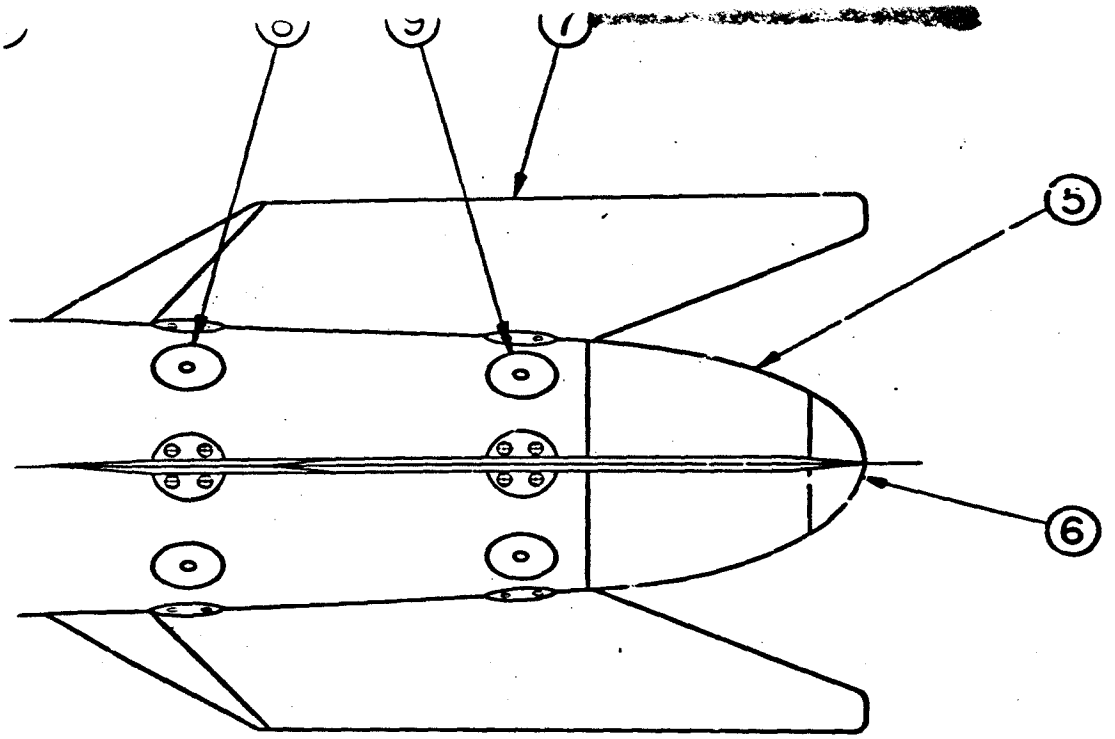

NO REQD	NO REQD	NO REQD	NO REQD	DESIGN AGENCY NUMBER	DESCRIPTION	NOTE	SHEET ZONE	ITEM
	1			311818-00	MC 1876			27
	1			N81848	CONTROL BOX ASSY (MAT.)			26
	2	2	2		MICRODOT CONNECTOR			25
								24
	1	1	1		SOLAR CELL			23
	1	1	1	311784-00	MC1835			22
	1	1	1	311932-00	MC1951 (PHASE 2)			21
		1	1	N60445	PULSE INITIATOR (TEST) NO. 3			20
	1	1	1	NC6850	P/O CONNECTOR AND BRACKET NO. 2 ASSEMBLY			19
		1	1	N54857	JUNCTION BOX, UNIVERSAL (BTS)			18
		1	1	N65310	MOUNT, JUNCTION BOX			17
		1	1	311164-00	MC1356			16
		1	1	N65327	MOUNT, TIMER			15
	1	1	1	311829-00	MC1887			14
	72	72	72	194092-00	SCREW, MACHINE			13
	36	36	36	194091-00	SCREW, MACHINE			12
	2	2	2	209932-00	LUG, SUSPENSION			11
	1	1	1	209915-00	DOOR, ACCESS			10
	4	4	4	260005-00	COVER AND SCREW, AFT			9
	4	4	4	260004-00	COVER AND SCREW, FWD			8
	4	4	4	260011-00	FIN			7
	1	1	1	206293-00	CAP AND SCREW, REAR			6
	1	1	1	206278-00	CASE EXTENSION, REAR			5
	1	1	1	260030-00	CASE SECTION, REAR			4
	1	1	1	206271-00	CASE SECTION, PREFLIGHT (MODIFIED)			3
	1	1	1	N96159 (SS 4)	CENTER CASE ASSEMBLY			2
	1	1	1	N91538	NOSE ASSEMBLY (DUMMY RADAR)	2		1
	100-16	100-15	100-14	* DENOTES DOCUMENTS AR DENOTES AS REQD	LIST OF MATERIAL			

SHEET 1
ISSUE 5
SHEET INDEX

CLASSIFICATION CATEGORY

DESIGN AGENCY APPROVALS

ORG	DATE	INITIALS
1512		
2212		

MFG AGENCY APPROVALS

TITLE

TX 61
FREE FALL (BTS)
100 SERIES
—13.3 DIA—

MFG AGENCY NUMBER

DWG CLASSIFICATION LEVEL
UNCLASSIFIED

PART CLASSIFICATION
UNCLASSIFIED

SIZE E | DWG NUMBER N96999
SCALE 1/4 | SHEET 1 OF 1

N96999

UNCLASSIFIED

[redacted]

UNCLASSIFIED

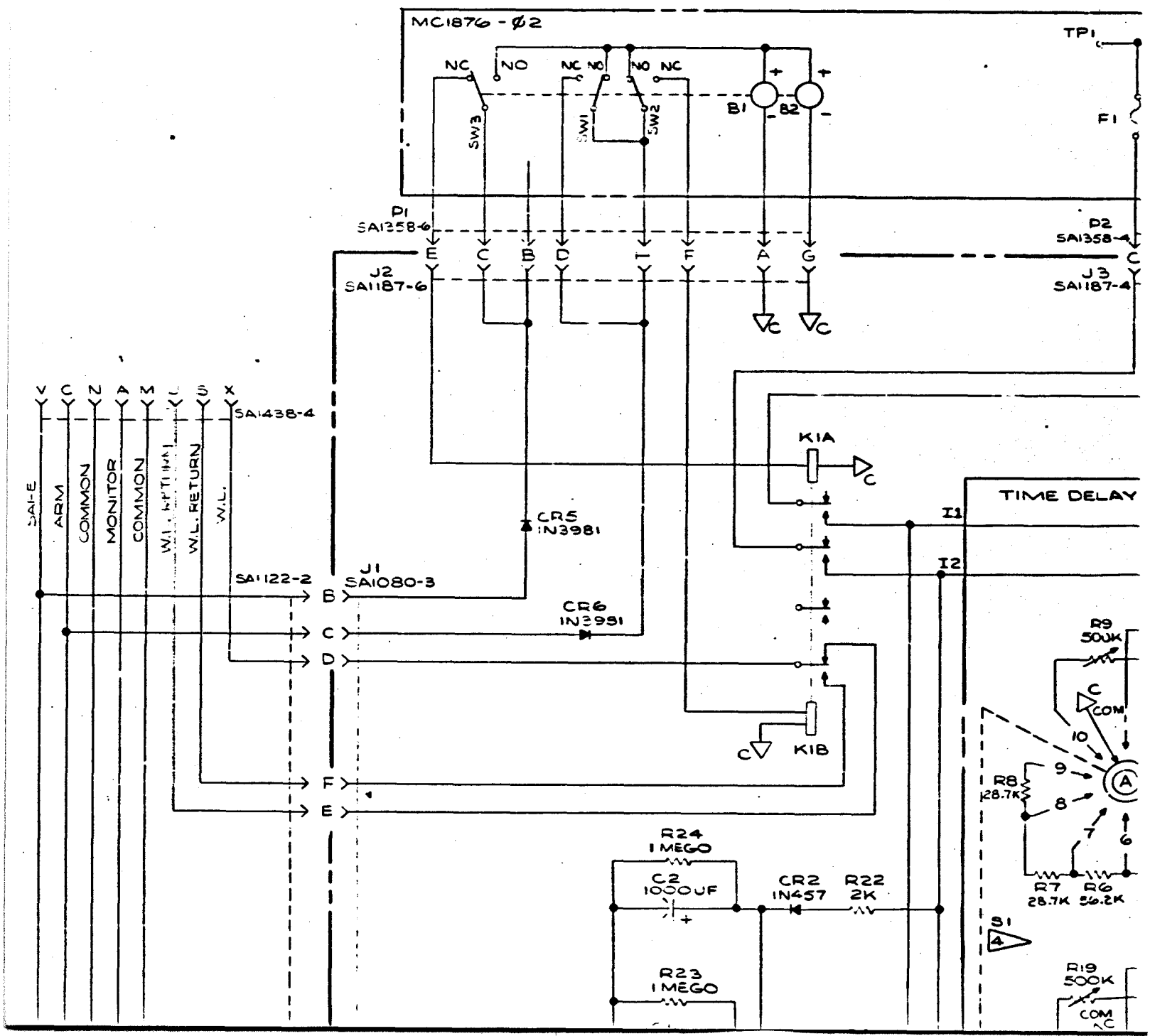

FIEL

5 4

NOTES:

1) UNLESS OTHERWISE SPECIFIED RESISTAN
ARE IN OHMS, CAPACITANCE VALUES ARE
2) ⊥ INDICATES CIRCUIT RETURN.
C

3) K4 AND K5 ARE ADJUSTABLE TIME DELAY
TIME DETERMINED (0.15 - 3.00 SECONDS)
THE RESISTANCE CONNECTED BETWEEN T

4 THE TIME DELAY (FROM RELEASE TO INITIATI
S1 AS SHOWN IN CHART:

POS'N	TIME DELAY (SEC
1	0.11
2	0.26
3	0.28
4	0.33
5	0.625
6	1.00
7	1.40
8	1.60
9	1.80
10	ADJUSTABLE (0.26

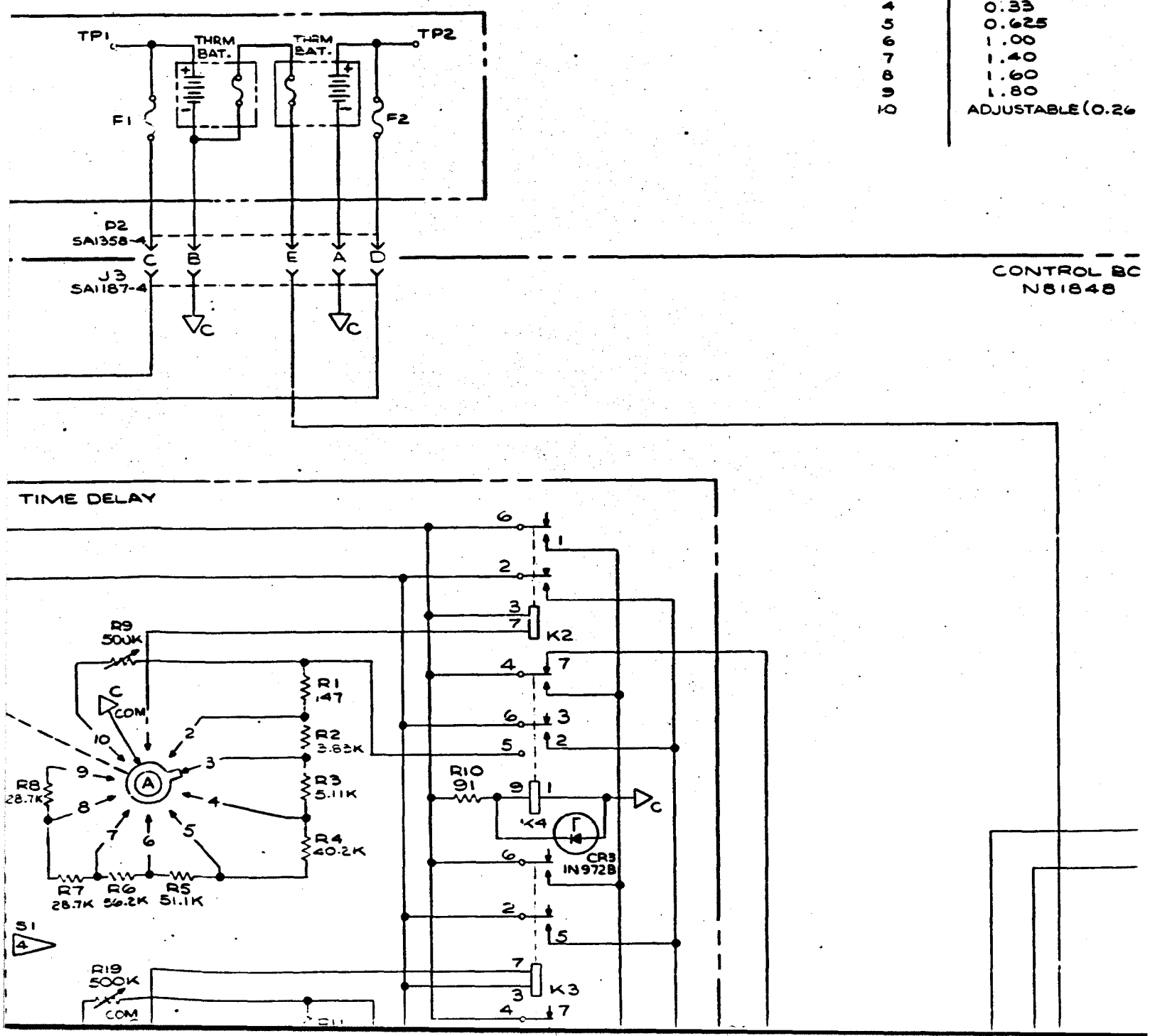

DESIGN AGENCY PART OR CONTROL NO.	REVISIONS ISSUE	SHEET ZONE	DESCRIPTION PREPARED BY	DATE	CHKR	ENGR
CKN9777-4-000	1		CRAGO, M 2213-4	5/21/65		

ED RESISTANCE VALUES
VALUES ARE IN MICROFARADS.
URN.

TIME DELAY RELAYS WITH THE
O SECONDS) BY THE VALUE OF
D BETWEEN TERMINALS 5 AND 1.
SE TO INITIATION) IS SELECTED BY

ME DELAY (SEC)
11
26
28
33
625
00
40
60
80
STABLE (0.26 - 3.0)

[redacted]

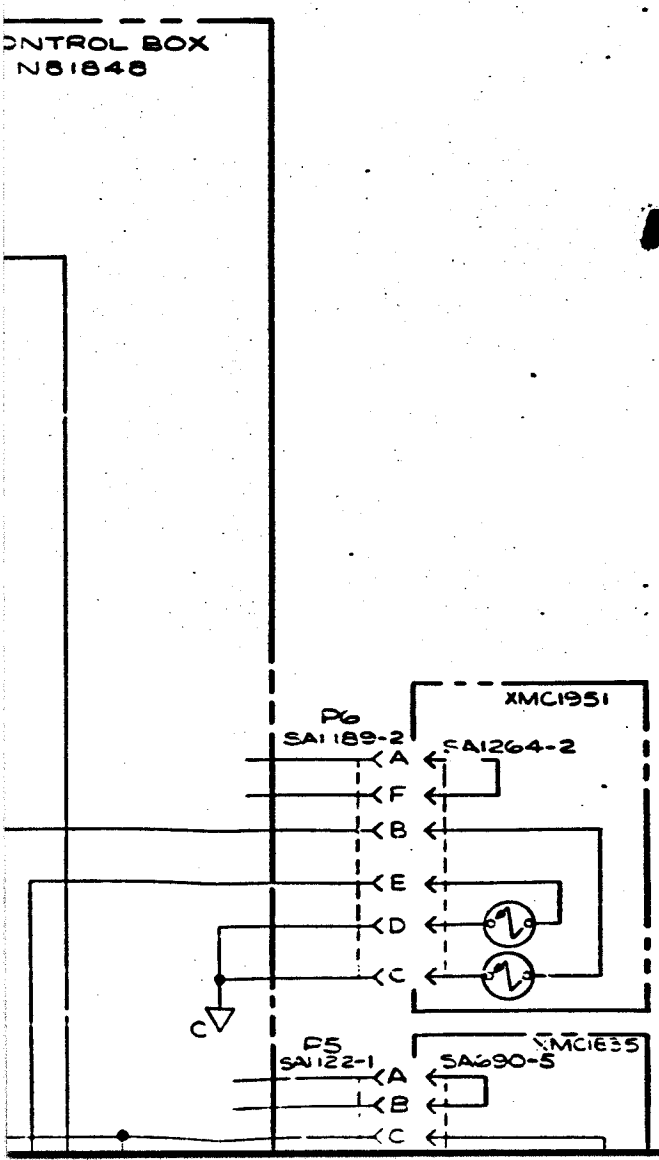

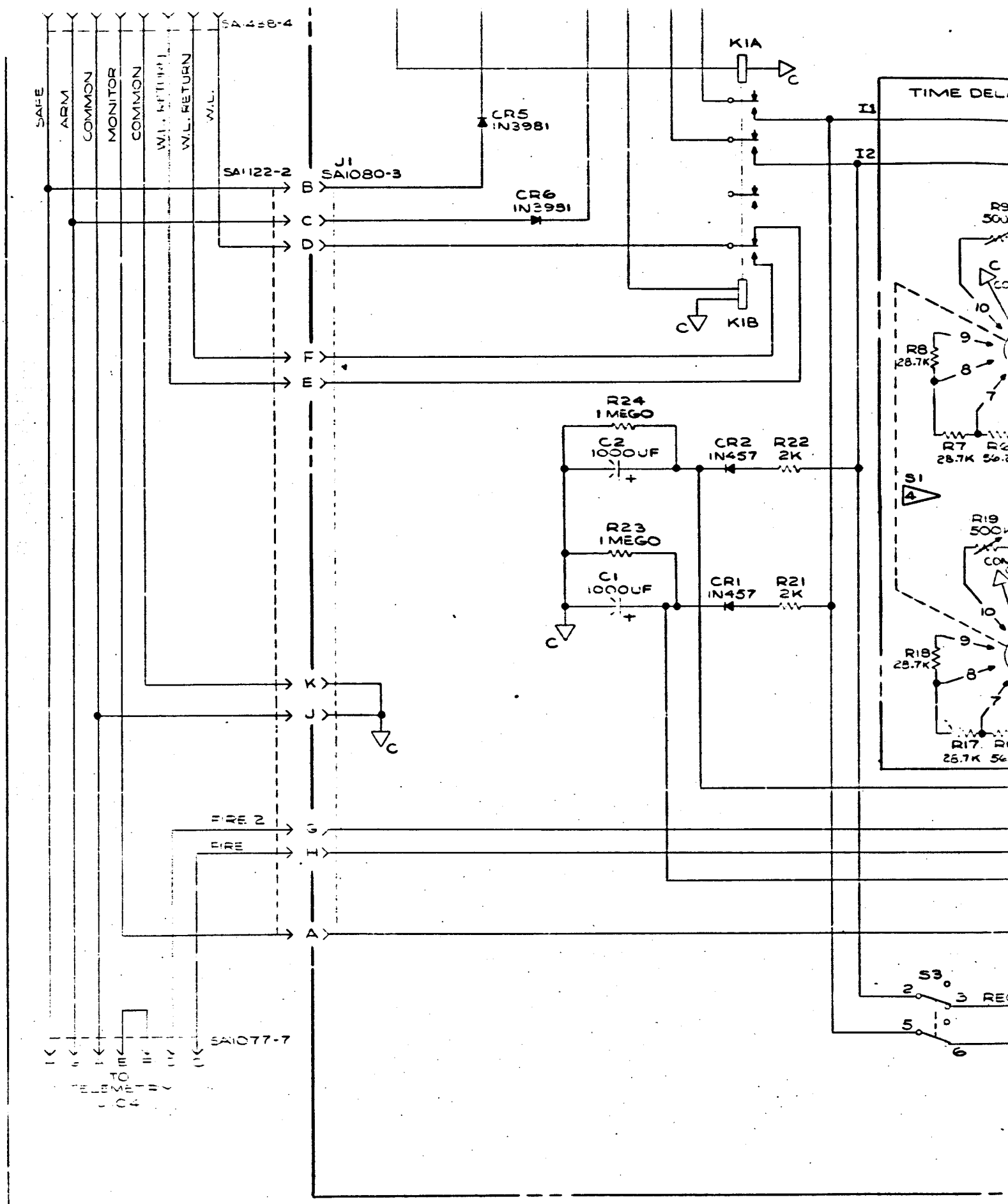

UNCLASSIFIED

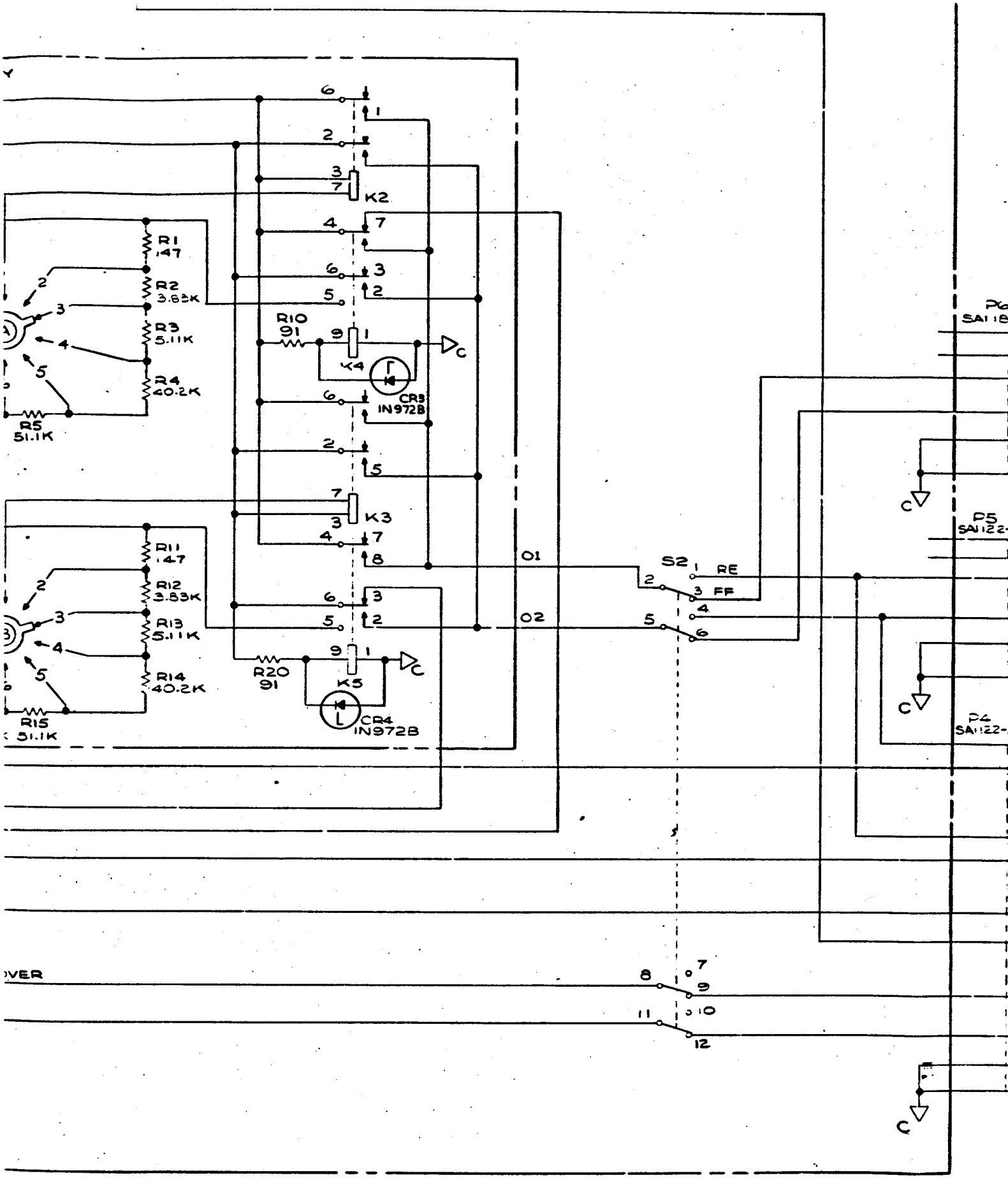
K2
R1
147
R2
3.83K
R3
5.11K
R4
40.2K
R5
51.1K
R10
91
K4
CR3
IN972B
K3
R11
147
R12
3.83K
R13
5.11K
R14
40.2K
R15
51.1K
R20
91
K5
CR4
IN972B
O1
O2
S2
RE
FF
C
P6
SA118
P5
SA122-
P4
SA122-
VER

UNC

5 4 3

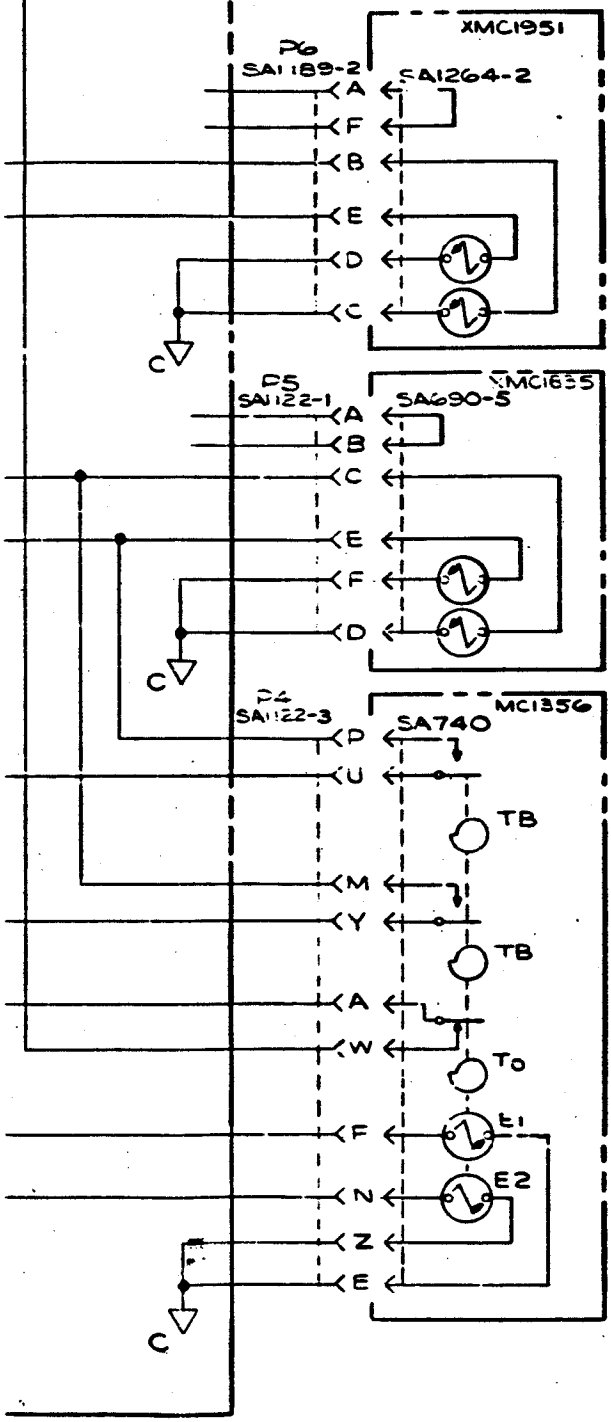

SHEET 1	DESIGN AGENCY APPROVALS	TITLE
ISSUE 1	ORG DATE INITIALS	SCHEMATIC, 100-16
SHEET INDEX		
CLASSIFICATION CATEGORY	MFG AGENCY APPROVALS	
		MFG AGENCY NUMBER
DWG CLASSIFICATION LEVEL UNCLASSIFIED	PARTS CLASSIFICATION	SIZE E DWG NUMBER CKN97774
		SCALE NONE SHEET 1 OF 1

CKN97774

UNCLASSIFIED

[redacted]